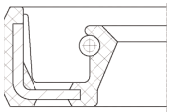

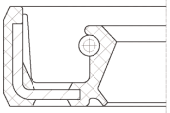

WA/WAS

Rotary shaft seal in standard design according to DIN 3760 with an elastomer outer sheath covering a metal insert as well as a spring-energised sealing lip. In addition, the standard design is available with a protective lip (WAS) on the air side.

Standard materials
NBR 70
Colour: black
Energised spring: non-alloy spring steel according to DIN EN 10270-1
Metal insert: non-alloy steel according to DIN EN 10139

Areas of application
Sealing of rotating machine elements such as shafts, hubs and axles.

Function
The WA/WAS is a single action rotary shaft seal for rotating or pivoting shafts with optional protective lip sealing action (WAS) on the side facing away from the medium, against dirt accumulation from the outside. The elastomer outer sheath provides good static sealing, good thermal expansion balance e.g. in light-metal housings, better sealing with greater roughness and secure sealing for split housings as well as good static sealing with thin fluid or gaseous media.

Media
Good chemical resistance to many mineral oils and greases. Please also refer to our media resistance tables on page 22 of this catalogue.

Operational application limits
Pressure (Mpa/bar): 0.05/0.5
Temperature (°C): -40 to +100
Peripheral speed (m/s): 12
Please also refer to our rotational speed diagram on page 20 of this catalogue.

Installation
Suitable tools should be used for installation. It is recommended that the installation housing is designed to provide the rotary shaft seal with axial support. Please also refer to our general installation instructions on page 30 of this catalogue.

Remarks
The nominal widths mentioned on the following pages represent the standard dimensions.

Other dimensions and different designs, e.g. double dust protection lip, spiral on the sealing lip, springs or metal cases made of other steel grades can be produced as well as all kinds of special designs. Minimum quantities may be obligatory for dimensions outside of the standard.

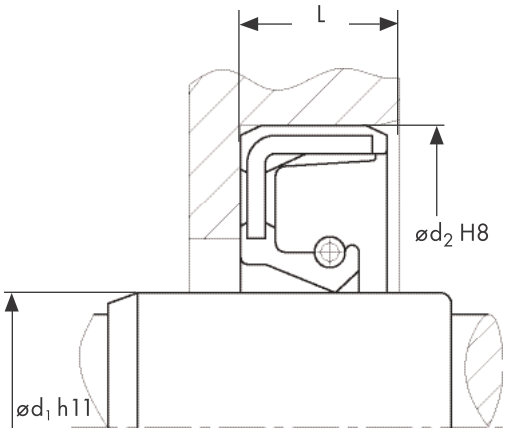

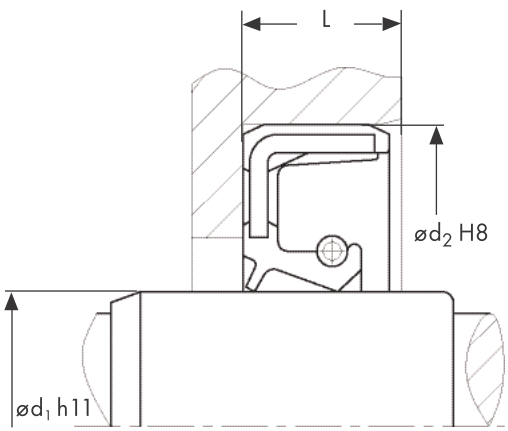

WA

Sizes metric

Part No.	Dimensions in mm ød$_1$	ød$_2$	L	Part No.	Dimensions in mm ød$_1$	ød$_2$	L
57025	4	11	6	34928	9	16	5
42406	4	12	6	16770	9	18	6
125600	4	16	6	16771	9	18	7
38808	4.8	22	7	36597	9	19	4
118986	5	13	7	38815	9	19	5
16758	5	15	6	62967	9	19	7
18651	5	15	7	18683	9	22	7
38432	5	16	6	16772	9	24	7
38809	5	16	7	18597	9	26	7
34771	5	18	7	60312	9	30	7
81892	6	13	4.5	62934	9.5	19	6.3
38433	6	14	6	90027	9.5	25.4	8
19683	6	14.1	4	26384	9.8	20	5
18652	6	15	4	57029	10	15	6
18653	6	15	6	16773	10	16	4
18654	6	16	5	18598	10	16	5
18658	6	16	6	43576	10	16.5	4
18655	6	16	7	150905	10	17	5
19391	6	17	6	84522	10	17	6
35748	6	18	5	18600	10	18	4
35749	6	18	6	18601	10	18	5
35750	6	18	7	16774	10	18	6
59318	6	19	6	26385	10	18	9
16759	6	19	7	39280	10	19	4
16760	6	22	7	18605	10	19	6.5
18656	6	22	8	16776	10	19	7
144398	6	26	7	39272	10	19	8
18657	7	14	5	28395	10	20	4
78430	7	15	5	39273	10	20	5
16761	7	16	7	16777	10	20	6
38810	7	18	7	27032	10	20	7
56582	7	19	6	18608	10	21	5
16762	7	22	7	16778	10	22	6
16763	7	22	8	16779	10	22	7
38811	8	14	4	16780	10	22	8
38812	8	15	5	16781	10	24	7
39266	8	15	7	39275	10	24	10
38813	8	15	8	39276	10	25	6
118719	8	16	4	37432	10	25	8
18659	8	16	6	16782	10	26	7
16764	8	16	7	16783	10	28	7
16765	8	18	5	16784	10	30	7
18660	8	18	6	38816	10	30	8
39265	8	18	7	39279	10	30	10
57027	8	20	5	18612	11	17	4
130629	8	20	7	130833	11	18	4
36216	8	20	8	80661	11	19	5
16766	8	22	6	127624	11	19	7
16767	8	22	7	39281	11	21.5	5
18595	8	22	8	16785	11	22	7
38814	8	22	10	18569	11	22	8
16768	8	24	7	39282	11	23	8
16769	8	30	7	16786	11	26	6
39267	8.5	18	8	18684	11	26	7
73093	9	16	4	26251	11	30	7

WA

Sizes metric

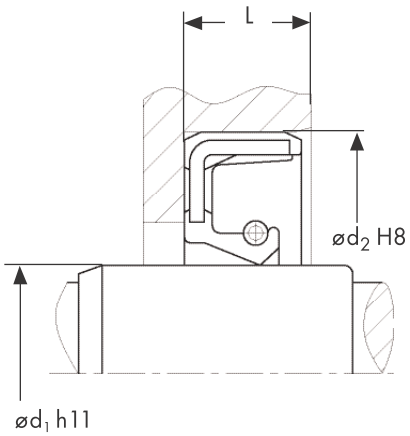

Part No.	Dimensions in mm ød1	ød2	L	Part No.	Dimensions in mm ød1	ød2	L
39283	11	30	8	83438	12.5	20	6
81900	11	30	10	39293	12.5	20.5	5
18571	12	18	4.5	38826	12.5	22	5
38817	12	18	5	56979	12.7	26	6
36471	12	19	4	69633	13	19	3
16787	12	19	5	74863	13	22	4
36470	12	20	4	16807	13	22	5
16788	12	20	5	18556	13	22	6
57035	12	20	7	60309	13	24	7
18573	12	21	4	38827	13	25	4
18574	12	21	5	38828	13	25	5
18575	12	22	4	16808	13	25	7
35427	12	22	4.5	18558	13	26	5
18577	12	22	5	16809	13	26	7
16789	12	22	6	44219	13	26	9
18578	12	22	6.5	35009	13	28	7
16791	12	22	7	39297	13	30	5
16794	12	22	8	18560	13	30	7
57037	12	24	4.5	16811	13	30	8
16795	12	24	6	16812	13	30	10
18583	12	24	6.5	38829	13	32	6
16796	12	24	7	18562	13	32	7
38818	12	24	7.5	22354	13	35	10
16798	12	24	8	39322	13.5	32	5
44237	12	24	10	38830	13.7	22	5
16757	12	24.5	5.5	19599	13.7	24	5
18585	12	25	4.5	39298	13.8	26	7
18587	12	25	5	89767	14	20	5
39288	12	25	6	38831	14	21	4
37095	12	25	7	16813	14	22	4
16799	12	25	8	18564	14	22	5
79069	12	26	6	18566	14	22	7
19484	12	26	6.5	18567	14	23	6
16800	12	26	7	18527	14	24	5
16801	12	26	8	18524	14	24	6
38819	12	28	5	16814	14	24	7
16802	12	28	7	39324	14	24	8
38824	12	28	8	35044	14	25	5
75964	12	30	5	38832	14	25	6
18546	12	30	6	16815	14	25	7
18547	12	30	7	75840	14	25	8
16805	12	30	10	18529	14	26	7
38301	12	32	5	60308	14	28	6
16806	12	32	7	16816	14	28	7
18552	12	32	10	39329	14	28.5	10
64559	12	35	4.3	16817	14	30	7
43605	12	35	7	16818	14	30	8
18553	12	35	10	18535	14	30	10
38825	12	37	10	18536	14	32	5
127438	12	38	10	38833	14	32	7
82987	12	45	7	38834	14	32	10
44234	12	52	7	38835	14	34	7
39289	12.3	32	5	16819	14	35	4.5
83437	12.5	19	5	16820	14	35	7
76323	12.5	20	5	16821	14	35	8

WA

Sizes metric

Part No.	Dimensions in mm ød$_1$	ød$_2$	L	Part No.	Dimensions in mm ød$_1$	ød$_2$	L
38866	14.8	30	5	64434	16	25	7
38867	14.8	30	7	18615	16	25.5	6
16823	15	21	4	39342	16	26	5
38868	15	21	4.4	39189	16	26	6
43690	15	21	5	18616	16	26	7
16824	15	22	7	39343	16	26	8
16825	15	24	5	39347	16	28	6
16826	15	24	7	16853	16	28	7
39336	15	24	9	126007	16	29	6.5
18688	15	25	5	39349	16	29	9.5
18540	15	25	6	18621	16	30	4.5
69749	15	25	7	16856	16	30	7
39337	15	25.5	5	44220	16	30	8
18543	15	25.5	7	16858	16	30	10
16829	15	26	4.5	39350	16	32	6
18544	15	26	6	16860	16	32	7
16830	15	26	7	39351	16	32	8
38304	15	26.5	4.6	38626	16	32	10
18501	15	27	7	37244	16	33	8
37433	15	28	4	19647	16	33	11
130821	15	28	6	18539	16	35	6
16832	15	28	7	18511	16	35	7
44235	15	28	8	38982	16	35	8
39338	15	28	10	16863	16	35	10
38434	15	30	4.5	39830	16	36	7
18504	15	30	5	44236	16	38	7
18506	15	30	5.5	39831	16	40	5
62966	15	30	6	39832	16	40	7
16833	15	30	7	16864	16	40	10
16837	15	30	8	39833	16	42	6
16838	15	30	10	19561	16.5	32	9
38875	15	32	5	38984	16.9	28	5
18503	15	32	5.5	16865	17	24	7
16840	15	32	7	18624	17	25	4
16842	15	32	8	38986	17	25	7
38877	15	32	9	18625	17	26	6
60306	15	32	10	18626	17	26	7
18510	15	33	7	18627	17	27	5
16843	15	35	5	16866	17	27	6
18689	15	35	7	16867	17	27	7
16845	15	35	8	18628	17	27	10
16846	15	35	10	16868	17	28	5
38882	15	37	7	16869	17	28	6
18514	15	37	10	16871	17	28	7
16847	15	40	10	38436	17	28	8
16848	15	42	7	19529	17	28.5	6
16849	15	42	10	18632	17	29	5
19601	15.3	22	7	18634	17	30	5
18492	15.6	25	7	18635	17	30	6
38435	16	22	4	16874	17	30	7
64656	16	22	7	16877	17	30	8
43694	16	22.2	4	16878	17	31	7
16850	16	24	5	18706	17	32	5
18520	16	24	6	16879	17	32	7
16852	16	24	7	16881	17	32	8

WA

Sizes metric

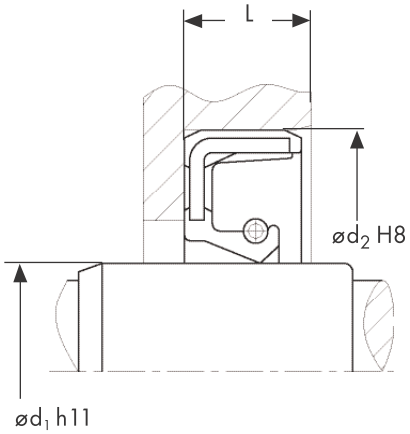

Part No.	Dimensions in mm ød1	ød2	L	Part No.	Dimensions in mm ød1	ød2	L
16882	17	32	10	39001	18	37	6
18710	17	33	8	18742	18	37	8
38992	17	34	4	18744	18	38	5
18711	17	34	7	16916	18	40	7
19594	17	34.5	4	16917	18	40	10
18712	17	35	5	16918	18	42	8
18713	17	35	6	26387	18	42	10
16886	17	35	7	39850	18	44	8
16888	17	35	8	18747	18	47	10
18568	17	35	9.5	39851	18.5	40	5
16890	17	35	10	130785	18.9	30	5
83440	17	37	4	19604	18.9	30	7
16892	17	37	7	18748	19	26	5.5
26386	17	37	8	16919	19	27	6
16893	17	37	10	39857	19	29	5
18719	17	38	7	39858	19	29	6.5
38995	17	38	8	83377	19	30	5
16894	17	38	11	40897	19	30	6
16895	17	40	6	39069	19	30	7
16896	17	40	7	18750	19	30	8
18721	17	40	8	39862	19	30	10
16900	17	40	8.5	39071	19	32	5
16901	17	40	10	16920	19	32	6
39841	17	42	5	16921	19	32	7
69748	17	42	7	16922	19	32	10
16903	17	47	7	16923	19	34	6
38996	17	47	8	56653	19	35	7
18725	17	47	10	18752	19	35	8
39842	17	47	11	16924	19	35	10
19603	17.5	20	6	39865	19	36	7
19672	17.5	28	6	18754	19	36	8
43705	17.8	26.2	3.5	44221	19	37	10
83015	18	24	5	39866	19	38	9.5
39845	18	25	5	26388	19	38	10
38998	18	26	6	127962	19	40	8
18674	18	27	5	16926	19	40	10
38999	18	28	4	39868	19	44.5	8
18728	18	28	5	56484	19	47	10
18729	18	28	6	19843	19	53	7.5
16904	18	28	7	19547	19.3	30	4.7
83441	18	30	5	39870	19.5	28	6
39847	18	30	6	19605	19.6	33	9
16905	18	30	7	26389	20	26	10
60302	18	30	10	69238	20	28	4.5
130846	18	32	4.7	39874	20	28	5
19652	18	32	6	18757	20	28	6
18737	18	32	7	18758	20	28	7
16908	18	32	8	18759	20	30	4.5
18739	18	32	10	72730	20	30	4.6
39849	18	35	5	16928	20	30	5
27036	18	35	6	18761	20	30	6
16910	18	35	7	16929	20	30	7
16912	18	35	8	44242	20	30	8
16914	18	35	10	39877	20	30	9
39000	18	36	7	18763	20	31	7

WA

Sizes metric

Part No.	Dimensions in mm ød$_1$	ød$_2$	L	Part No.	Dimensions in mm ød$_1$	ød$_2$	L
18765	20	32	5	16974	20	52	10
39881	20	32	6	27677	20	52	12
16932	20	32	7	40517	20	57	8
39089	20	33	8	40660	20	60	10
16935	20	33	9	18811	20	62	6.5
18768	20	33	10	44544	20	72	5
18769	20	34	6	43740	20	72	10
18770	20	34	7	16977	21	30	6.5
18773	20	35	5	18813	21	32	5
130832	20	35	5.3	16978	21	32	7
18774	20	35	5.5	18815	21	35	6
16936	20	35	6	16979	21	35	7
16937	20	35	7	39120	21	35	8
18776	20	35	8	26390	21	35	10
16940	20	35	10	18818	21	37	7
16942	20	35	12	40523	21	40	5
40510	20	35.5	10	18820	21	40	10
36567	20	36	5	19797	21	48	8
36500	20	36	6	39121	21	52	8
18781	20	36	7	40521	21.3	32	5
39106	20	37	7	38561	22	30	7
16943	20	37	8	26391	22	30	10
18784	20	37	10	18822	22	31	5
18786	20	38	5	40526	22	31.8	5
39107	20	38	6	26488	22	32	4
16944	20	38	7	18823	22	32	5
18788	20	38	8	16980	22	32	5.5
40511	20	38	9	16981	22	32	7
18792	20	40	5	44243	22	32	10
16948	20	40	6	20236	22	33	7
16949	20	40	7	39122	22	34	7
16953	20	40	8.5	18528	22	35	5.5
18793	20	40	9	39123	22	35	5.6
16954	20	40	10	18828	22	35	6
40513	20	40	11	16844	22	35	6.5
18830	20	40.2	6	16983	22	35	7
40514	20	41	8	16985	22	35	8
39110	20	41.2	6	16986	22	35	10
16958	20	42	7	39124	22	36	6
16960	20	42	10	18836	22	36	7
16963	20	43	7.5	16989	22	37	7
16964	20	45	10	39127	22	38	6
18799	20	45	12	16991	22	38	7
39113	20	46	6	18839	22	38	8
16965	20	47	7	120661	22	40	6
16968	20	47	8	16992	22	40	7
18802	20	47	8.5	18842	22	40	8
18803	20	47	9	16994	22	40	8.5
60298	20	47	9.5	16995	22	40	10
16969	20	47	10	40531	22	42	5
135052	20	47.5	7	16998	22	42	7
19796	20	48	9	16999	22	42	10
83442	20	48.4	7	18847	22	42	11
18807	20	52	7	17001	22	45	7
18808	20	52	8	56821	22	45	8

WA

Sizes metric

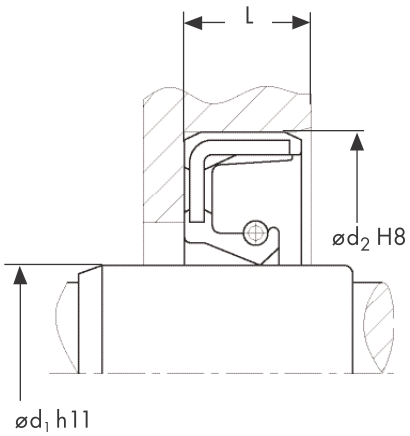

Part No.	Dimensions in mm ød1	ød2	L	Part No.	Dimensions in mm ød1	ød2	L
39135	22	45	10	17037	25	36	10
18849	22	47	7	17038	25	37	5
17005	22	47	10	18887	25	37	6
39137	22	48	5	17039	25	37	7
19798	22	48	10	18890	25	37	8
135221	22	50	10	40609	25	38	5
18850	23	35	6	17041	25	38	7
17008	23	35	7	40610	25	38	8
39141	23	37	6	39168	25	38	10
39143	23	37	7	18893	25	39	9
17009	23	38	7	18894	25	40	5
17010	23	38	8	39372	25	40	6
18854	23	40	8	17044	25	40	7
17011	23	40	10	17047	25	40	8
38627	23	42	10	17049	25	40	10
19803	23	52	12	18902	25	40	11
40538	24	32	5	17054	25	42	6
18857	24	34	5.5	18905	25	42	6.5
18858	24	35	6	18906	25	42	7
17015	24	35	7	17057	25	42	8
18861	24	36	6	18908	25	42	8.5
43758	24	36	7	75827	25	42	9
17016	24	37	7	17059	25	42	10
156826	24	38	7	57054	25	42.9	9.5
18866	24	38.5	10	19787	25	43	9
40539	24	39	8	18911	25	44	7
17017	24	40	7	40687	25	44.5	10
38628	24	40	8	18898	25	45	7
17019	24	40	10	17063	25	45	10
17021	24	40	11	18913	25	45	11
40540	24	40	12	17066	25	46	7
39155	24	42	7	18915	25	47	6
17022	24	42	8	17068	25	47	7
18867	24	42	10	17071	25	47	8
40542	24	44	6	17074	25	47	10
18868	24	44	7	17079	25	48	8
17024	24	47	7	62885	25	50	7
17026	24	47	10	17080	25	50	10
39162	24	48	10	18921	25	50	12
39163	24	50	10	17082	25	51	11
61142	24	52	10	43762	25	52	5
19851	24	62	7	18922	25	52	6.4
43755	24.5	33	5	17083	25	52	7
56980	24.5	40	8.5	17086	25	52	8
19608	24.9	45	6.5	17089	25	52	10
18872	25	32	6	17093	25	52	12
18873	25	32	7	39385	25	52	15
18874	25	33	4	70355	25	54	7
18875	25	33	6	35579	25	55	10
17029	25	35	5	66361	25	58	10
17030	25	35	7	40694	25	60	7
17033	25	35	8	130795	25	62	5
18882	25	35	9	18929	25	62	7
17035	25	35	10	17096	25	62	8
17036	25	36	7	17097	25	62	10

WA

Sizes metric

Part No.	Dimensions in mm ød$_1$	ød$_2$	L	Part No.	Dimensions in mm ød$_1$	ød$_2$	L
39389	25	72	7	17128	28	38	7
130788	26	35	5	18970	28	38	8
17101	26	35	7	17131	28	40	5
38437	26	36	7	17132	28	40	7
17104	26	37	7	17133	28	40	8
18934	26	37	10	68264	28	40	9
18935	26	38	5	17134	28	40	10
18937	26	38	7	17136	28	42	7
18941	26	40	6	17137	28	42	8
18942	26	40	7	18692	28	42	10
39392	26	40	9	18972	28	42.5	8
17105	26	42	6	38897	28	42.9	9.5
18944	26	42	7	38898	28	43	7
18945	26	42	8	19788	28	43	9
39395	26	42	10	17138	28	43	10
19718	26	42.7	10	19790	28	44	10
18950	26	45	7	38902	28	45	5
18953	26	47	5	18979	28	45	6
17107	26	47	7	64399	28	45	7
18691	26	47	10	17140	28	45	8
40695	26	48.5	11	17142	28	45	9
62965	26	50	10	38905	28	47	5
17108	26	52	8	17145	28	47	7
17110	26	52	10	18980	28	47	8
83443	26.5	47	7	17148	28	47	10
17111	27	35	4	26392	28	48	5
17112	27	35	7	60202	28	48	10
27479	27	35	7.5	18983	28	48	11
17113	27	37	7	18986	28	50	8
17114	27	38	6	38909	28	50	10
69710	27	38	7	68334	28	50	12
18960	27	40	6	38910	28	52	5
39200	27	40	7	18988	28	52	7
56918	27	40	10	17151	28	52	10
17116	27	41	10	17152	28	52	12
40702	27	41.2	8	19807	28	52.4	12.5
40703	27	41.2	9.5	40715	28	55	10
17117	27	42	7	83444	28	57	12
17118	27	42	10	18990	28	62	10
18962	27	43	9	19852	28	62	12
39404	27	45	7	40717	29	38	6
17121	27	45	8	18991	29	39	5
17122	27	47	6	83445	29	40	7
17123	27	47	8	18992	29	41	5
19795	27	47	9.8	18993	29	41	6
17124	27	47	10	17154	29	42	7
18967	27	50	10	38913	29	43	7
17125	27	52	8	18994	29	45	7
130638	27	53	7	17155	29	45	8
74986	27.8	38	7	38915	29	45	9
117567	28	35	5	19791	29	45	9.5
40698	28	37	8	38916	29	46	10
40712	28	38	5	17157	29	47	10
18969	28	38	5.5	17158	29	48	10
17127	28	38	6	17159	29	50	10

WA

Sizes metric

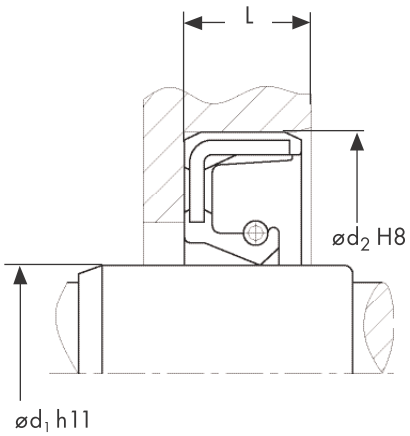

Part No.	Dimensions in mm ød1	ød2	L	Part No.	Dimensions in mm ød1	ød2	L
26393	29	50	12	17214	30	52	12
17160	29	52	9	17218	30	54	10
17161	29	55	9	19027	30	55	6
17162	29	62	10	17219	30	55	7
36387	30	36	5	17221	30	55	10
36154	30	37	4	17226	30	55	12
18995	30	40	5	38941	30	56	7
17163	30	40	7	19030	30	56	8
38917	30	40	8	17231	30	56	10
24206	30	40	9	44229	30	56	12
17166	30	40	10	19849	30	57	8
40721	30	41	6.3	17234	30	60	10
18997	30	42	4.5	38944	30	62	5
38366	30	42	5.7	40733	30	62	6.5
18998	30	42	6	17243	30	62	7
17167	30	42	7	17246	30	62	8
19000	30	42	8	17248	30	62	10
26154	30	42	10	17252	30	62	12
26394	30	42	12	38958	30	65	8
19003	30	43	8	19033	30	65	10
26395	30	44	7	38961	30	70	10
38924	30	44	8	17256	30	72	10
17170	30	44	10	19038	31	41	5
19007	30	45	5	40738	31	44.5	5
44857	30	45	5.5	40739	31	44.5	8
26396	30	45	6	17263	31	47	7
17171	30	45	7	17264	31	47	10
17173	30	45	8	17265	31	52	6
19008	30	45	10	17266	31	52	7
19793	30	45.2	10	60219	31	52	8
19010	30	46	5	17267	31	52	9
19013	30	46	8	17269	31	55	9
19014	30	46	10	19687	31.5	40	7
17179	30	47	5	38969	31.5	47	7
19015	30	47	6	64824	31.5	52	7
17180	30	47	7	40743	32	40	5
17183	30	47	8	78227	32	40	7
17185	30	47	10	59428	32	42	5
17190	30	48	8	38970	32	42	6
17191	30	48	10	17270	32	42	7
17192	30	49	9	40744	32	42	9
19799	30	49.5	10	40746	32	44	7
130784	30	50	5	40750	32	44.5	10
38438	30	50	7	17271	32	45	6
17194	30	50	8	17272	32	45	7
17195	30	50	10	19045	32	45	8
19019	30	50	11	17274	32	45	10
38934	30	50	12	40754	32	46	7
6225	30	52	4	68266	32	46	10
19021	30	52	5	17275	32	47	7
17204	30	52	6	17277	32	47	8
17205	30	52	7	17279	32	47	10
17207	30	52	8	39410	32	47.5	6
69917	30	52	8.5	19048	32	48	5
17209	30	52	10	17282	32	48	7

WA

Sizes metric

Part No.	Dimensions in mm ød$_1$	ød$_2$	L	Part No.	Dimensions in mm ød$_1$	ød$_2$	L
39412	32	48	8	17328	34	50	10
17284	32	48	9	19081	34	51	8
39413	32	48	10	17331	34	52	7.5
19711	32	50	7	17332	34	52	8
17285	32	50	8	17333	34	52	10
17286	32	50	10	17335	34	52	11
17288	32	50	12	115872	34	55	6
24235	32	51	8	17336	34	55	9
39416	32	51	9	17337	34	58	13
40758	32	51	9.5	17339	34	62	10
40757	32	51	19.5	19085	34	72	10
17290	32	52	5	143868	34.5	47	7
17291	32	52	7	68562	35	42	8
17293	32	52	7.5	76213	35	43	6
40617	32	52	8	40776	35	44.5	5
27029	32	52	9	40777	35	44.7	8
17295	32	52	10	65118	35	45	5
17298	32	52	12	40778	35	45	6
39417	32	54	8	17345	35	45	7
17301	32	55	10	21002	35	45	10
17305	32	56	10	40780	35	45	12
44238	32	56	12	19794	35	46	6.5
26397	32	57	12	38365	35	47	4.5
39421	32	57.15	7	19089	35	47	5
19056	32	62	6	17348	35	47	6
19057	32	62	8	17350	35	47	7
17312	32	62	10	39437	35	47	8
44239	32	62	12	17353	35	47	10
17319	32	66	10	40782	35	47.3	7
20673	32	70	8	40783	35	47.5	8
19789	33	43	7	24365	35	48	8
19065	33	45	7	17356	35	48	9
83415	33	47	11	40792	35	50	5
40766	33	47.5	7.5	17357	35	50	7
17320	33	48	12	17359	35	50	8
19067	33	50	6	17360	35	50	10
81231	33	50	7	39444	35	51	8
38629	33	50	8	17369	35	52	7
17322	33	50	10	17373	35	52	8
19070	33	52	6	19097	35	52	8.5
19804	33	52	8	17372	35	52	8.8
17324	33	52	10	27294	35	52	9
39428	33	55	10	17378	35	52	10
19848	33	56	12	19100	35	52	12
26398	34	44	6	156996	35	53	7
19071	34	44	7	83416	35	53	8
19072	34	45	7	19844	35	54	8
39430	34	46	8	19101	35	54	10
17326	34	46	10	39448	35	55	5
38630	34	47	9	127439	35	55	7
38631	34	47	12	17385	35	55	8
19076	34	48	7	17387	35	55	10
17327	34	48	8	40799	35	55	11
39431	34	49.3	9.5	19105	35	55	12
19080	34	50	8	38439	35	55.5	9

WA

Sizes metric

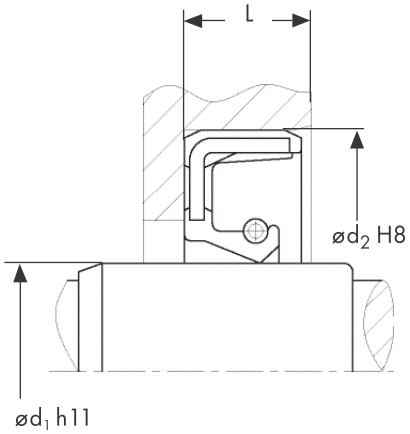

Part No.	Dimensions in mm ød1	ød2	L	Part No.	Dimensions in mm ød1	ød2	L
17393	35	56	8	17469	36	62	10
17394	35	56	10	17470	36	68	10
17398	35	56	12	19864	36	75	12
26399	35	57	10	69356	36	83	12
40802	35	58	7	19800	37	50	10
17403	35	58	7.5	83239	37	52	7
17404	35	58	10	39496	37	52	8
17406	35	58	12	60227	37	52	10
40803	35	59.5	12	74780	37	58	13
40804	35	60	5	17473	37	62	8
40805	35	60	8	39490	37	62	10
17410	35	60	10	17474	37	62	11
17413	35	60	12	35001	37	62	12
125750	35	62	5	19856	37	72	12
17416	35	62	7	19808	37.5	52.4	8
39456	35	62	8	124706	38	47	7
17421	35	62	10	39500	38	48	6
17425	35	62	12	40816	38	48	7
39458	35	64	8	17476	38	50	7
17430	35	65	9	19116	38	50	8
19110	35	65	10	24362	38	50	10
17433	35	65	12	27462	38	52	7
83417	35	67	7	17479	38	52	8
17436	35	68	6	39508	38	52	9
17437	35	68	10	17480	38	52	10
17438	35	68	12	39510	38	53	8
39464	35	72	7	38089	38	54	6.5
17444	35	72	10	17483	38	54	10
17448	35	72	12	17486	38	55	6
117038	35	80	8	19121	38	55	7
24343	35	80	10	27594	38	55	10
36617	35	80	12	19124	38	55	10.5
35187	35	80	13	40820	38	55	11
39470	35.7	63.3	9.3	19847	38	55.5	9
44222	35.8	68	10	56917	38	56	7
17455	36	47	7	17490	38	56	10
17456	36	48	10	81233	38	56	11
40808	36	48	12	39514	38	56	12
17457	36	50	7	26400	38	57	10
17458	36	50	10	40823	38	57.5	8
40813	36	52	5	39515	38	58	5
74061	36	52	6.5	37107	38	58	8
17459	36	52	7	44224	38	58	10
19113	36	54	6.5	19126	38	58	11
39058	36	54	7	40825	38	58.5	7
17461	36	54	7.5	17494	38	60	10
44223	36	54	10	19128	38	60	12
151456	36	55	8	19129	38	62	7
39486	36	56	6	19130	38	62	8
17463	36	56	10	19131	38	62	9
40814	36	58	9	17496	38	62	10
18693	36	58	10	19728	38	62	11.5
17465	36	58	12	17499	38	62	12
17467	36	59	9.5	26401	38	64	12
17468	36	62	7	39528	38	65	8

WA

Sizes metric

Part No.	Dimensions in mm ød$_1$	ød$_2$	L	Part No.	Dimensions in mm ød$_1$	ød$_2$	L
81236	38	65	9	17559	40	62	12
17501	38	65	10	118562	40	62	14
44240	38	70	12	40842	40	63	6
17506	38	72	10	38440	40	63	10
39533	38	72	12	37310	40	63.6	12.7
19858	38	74	10	24366	40	65	9
40828	38	75	5	17563	40	65	10
72816	38	80	10	17567	40	65	12
39535	38	80	12	26938	40	68	6
19132	39	51	7.5	39567	40	68	7
39540	39	52	8	83420	40	68	8
56708	39	55.9	9	17573	40	68	10
17511	39	65	9	17575	40	68	11
39543	39.7	61.9	8	19166	40	68	12
36838	39.7	80.4	15	27033	40	70	8
40831	40	50	5	17577	40	70	10
19134	40	50	7	26403	40	70	12
17512	40	50	8	17581	40	72	7
40832	40	50	9	17585	40	72	10
40834	40	51	5.5	19169	40	72	12
24361	40	52	5	38632	40	75	7
17513	40	52	6	24192	40	78	10
17514	40	52	7	27979	40	80	7
19139	40	52	8	19170	40	80	8
39547	40	52	8.5	17590	40	80	10
17518	40	52	10	27389	40	80	12
17519	40	53	8.5	17597	40	80	13
35615	40	54	7	19171	40	85	10
39552	40	55	6.5	69820	40	90	8
17520	40	55	7	36995	40	90	10
17523	40	55	8	39593	40	90	12
17527	40	55	10	72975	40	110	12
39554	40	55	12	81139	41	52	8
27031	40	56	7	19172	41	55	8.5
17531	40	56	8	19174	41	56	7
19146	40	56	9	19175	41	56	7.4
17533	40	56	10	19176	41	56	8
17536	40	56	12	17602	41	56	10
44225	40	57.15	10	40847	41	63	6
26402	40	58	7	40848	41	63.5	10
19148	40	58	8	19801	42	50	7
19150	40	58	9	60217	42	50	10
19151	40	58	10	88988	42	52	5
17541	40	58	12	39198	42	52	8
17545	40	60	7	39601	42	52.5	7
19153	40	60	8	17604	42	55	7
17546	40	60	10	17606	42	55	8
44246	40	60	12	40850	42	55	9
40838	40	61	10	19185	42	55	10
40769	40	62	5	39606	42	56	5
40840	40	62	6.5	19188	42	56	6
17550	40	62	7	17607	42	56	7
44268	40	62	8	39203	42	57	7
17553	40	62	10	75064	42	58	7
17558	40	62	11.5	72520	42	58	8

WA

Sizes metric

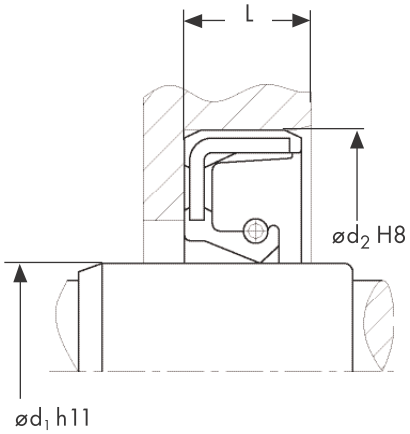

Part No.	Dimensions in mm ød1	ød2	L	Part No.	Dimensions in mm ød1	ød2	L
17611	42	58	10	39631	44	100	12
17613	42	58	12	19609	44.5	62	10
40853	42	58.5	10	19231	44.5	62	11.5
40854	42	60	7	65119	45	50	5
19198	42	60	8	19232	45	52	8
19199	42	60	9	38441	45	55	7
17614	42	60	10	19233	45	55	8
40855	42	60	12	39634	45	55	10
134080	42	62	6.5	39635	45	56	6
21584	42	62	7	7353	45	56	7
19203	42	62	8	19235	45	57	7
17621	42	62	10	39638	45	57	7.5
17624	42	62	12	17657	45	58	7
19205	42	64	7	19237	45	58	8
19206	42	65	8	26406	45	59	8
17627	42	65	10	39641	45	60	6.5
17630	42	65	12	17658	45	60	7
44230	42	68	11	17660	45	60	8
17634	42	68	11.5	17662	45	60	10
39613	42	70	8	26407	45	60	12
19208	42	70	10	40878	45	61	9
17637	42	70	12	126993	45	61	12
19210	42	72	8	17668	45	62	7
17638	42	72	10	17670	45	62	8
39616	42	72	12	19244	45	62	9
17643	42	80	10	17671	45	62	10
19822	42	81	13	17676	45	62	12
19213	43	53	5	40880	45	64	9.5
40857	43	54	7.5	39647	45	65	6
19214	43	55	7	35297	45	65	7
40858	43	59	5	17680	45	65	8
72615	43	60	10	44460	45	65	9
17646	43	62	10	17681	45	65	10
60210	43	65	8	17685	45	65	12
17647	43	65	13	56350	45	66	6
17648	43	66	10	39649	45	66	9
17649	43	66	12	17689	45	66	10
38633	43	75	10	25919	45	68	8
17650	43	80	10	17690	45	68	10
26404	44	52	10	40883	45	68	10.8
19845	44	54	4.5	19249	45	68	12
39629	44	54	7.5	39652	45	68	12.5
26405	44	55	7	19855	45	68.2	12
40865	44	58.5	10	72739	45	69.1	12
19218	44	60	9	20250	45	70	10
17651	44	60	10	17697	45	70	12
40868	44	62	8	26408	45	70	14
19225	44	62	10	47274	45	72	7
40869	44	63.5	11	18694	45	72	8
17654	44	65	10	17702	45	72	9
40872	44	66	13	17703	45	72	10
62968	44	70	10	17706	45	72	12
17655	44	72	10	26563	45	75	6
17656	44	73	12	38442	45	75	8
81250	44	78	12	17711	45	75	10

WA

Sizes metric

Part No.	Dimensions in mm ød$_1$	ød$_2$	L	Part No.	Dimensions in mm ød$_1$	ød$_2$	L
19257	45	78	13	17758	48	90	10
17716	45	80	10	17759	48	90	12
17719	45	80	13	21578	49	65	10
17721	45	85	10	40932	49	68	7
27678	45	85	13	36203	49	68	12
19259	45	90	10	19735	49	70	9.5
47276	45	100	10	83421	49.5	60	8
26409	46	62	9	40934	50	58	4.5
17726	46	64	8	19292	50	59	4
16460	46	72	10	40936	50	60	7
26410	46	78	10	38751	50	60	8
39667	46.2	80	10	60361	50	60	10
56982	47	58	6	17761	50	62	7
19263	47	58	7	39696	50	62	8
39668	47	62	6	19293	50	62	10
19264	47	62	8	19294	50	64	10
19265	47	65	8	64230	50	65	7
40891	47	65	9	17764	50	65	8
17727	47	65	10	17767	50	65	10
17728	47	67	12	27679	50	65	12
40892	47	68	6	44094	50	66	7.93
17729	47	72	9	38752	50	66	8
44247	47	72	10	17772	50	66	10
57132	48	55	4	19298	50	67	9
44226	48	58	4	17773	50	68	8
124704	48	60	6	83393	50	68	9
81253	48	62	7	17774	50	68	10
17730	48	62	8	19300	50	68	11
17731	48	62	10	17776	50	68	12
69323	48	62	12	19301	50	68	14
81254	48	63	11	24363	50	70	8
27034	48	65	8	39702	50	70	9
17733	48	65	10	17779	50	70	10
19274	48	65	12	17782	50	70	12
40895	48	66.8	9.8	40940	50	72	6
19278	48	68	10	17785	50	72	8
17740	48	68	12	17786	50	72	10
19280	48	70	8	17789	50	72	12
83397	48	70	9	40941	50	72	14
17742	48	70	10	40944	50	74	9
19282	48	70	12	39708	50	75	10
17744	48	72	7	17793	50	75	12
19285	48	72	8	60359	50	75	13
19286	48	72	9	39709	50	76	10
17746	48	72	10	39713	50	78	10
17748	48	72	12	19311	50	78	12
19734	48	72.5	10	17795	50	80	8
19860	48	74	10	17796	50	80	10
44107	48	75	8	19314	50	80	12
19290	48	80	8	17801	50	80	13
17751	48	80	10	19317	50	80	14
17753	48	80	13	19319	50	85	8
17755	48	85	6	27536	50	85	10
17756	48	85	10	17806	50	85	12
17757	48	85	13	17808	50	85	13

WA

Sizes metric

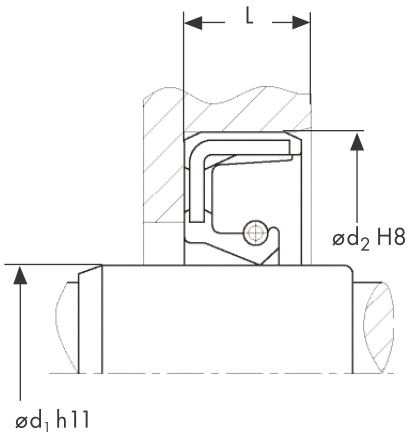

Part No.	Dimensions in mm ød1	ød2	L	Part No.	Dimensions in mm ød1	ød2	L
17810	50	90	10	64231	55	70	7
17815	50	90	13	17864	55	70	8
36797	50	95	7	19348	55	70	9
127704	50	100	10	17867	55	70	10
69397	50	110	10.5	37269	55	72	7
47348	50	110	12	17871	55	72	8
18789	51	72	10	17872	55	72	10
39059	52	60	8	38563	55	72	12
126852	52	62	7	26411	55	72	13
19321	52	65	8	40969	55	72.5	9
39724	52	65	9	19352	55	75	8
17817	52	68	7	17878	55	75	10
19324	52	68	8	17880	55	75	12
40951	52	68	9	19355	55	78	8
39726	52	68	10	39756	55	78	9
44227	52	68	13	17885	55	78	10
17822	52	69	10	19356	55	78	12
39731	52	70	10	83422	55	80	5
17825	52	72	8	83423	55	80	6
17826	52	72	10	17887	55	80	8
17828	52	72	12	17888	55	80	10
39735	52	75	10	17893	55	80	12
17831	52	75	12	17896	55	80	13
31244	52	76	13	17900	55	85	8
19865	52	76.2	10	17902	55	85	10
44248	52	78	13	144060	55	85	12
19331	52	80	8	17905	55	85	13
17833	52	80	10	17907	55	85	16
17837	52	80	13	44270	55	88	10
19333	52	85	8	83424	55	90	8
17839	52	85	10	17908	55	90	10
40955	53	65	10	35576	55	90	12
17844	53	68	10	17910	55	90	13
60354	53	68	13	39199	55	100	10
47548	53	79	10	26356	55	100	12
19821	53	80	10	83425	55	100	13
19854	54	68	10.5	17914	55	100	16
18695	54	70	10	37203	56	69	10
19337	54	72	5	19360	56	70	8
39741	54	72	8	17915	56	72	8
17846	54	72	10	26412	56	72	9
39743	54	72.5	9	17917	56	72	10
17851	54	74	8	17918	56	76	11
40962	54	75	12	19362	56	80	8
19343	54	76	12	19364	56	85	8
17852	54	76	12.5	19365	56	85	13
25920	54	78	12	17919	56	88	10
39745	54	80	8	17920	56	88	13
17859	54	82	11	56290	56	90	10
17861	54	85	15	38753	56	100	10
20674	54	90	13	40983	57	67.5	6
44797	55	65	8	40984	57	72	10
40965	55	65.7	7.1	39774	57	75	10
18696	55	68	8	19368	57	75	12
40967	55	68.5	7.5	40985	57	76	12.5

WA

Sizes metric

Part No.	Dimensions in mm ød$_1$	ød$_2$	L	Part No.	Dimensions in mm ød$_1$	ød$_2$	L
40986	57	78	12	39791	60	82	9
115754	57	80	12	19400	60	82	12
40987	57	80	13	17959	60	85	8
49503	57	82.7	10	17961	60	85	10
39776	57	85	10	19401	60	85	12
17923	57	85	13	19402	60	85	13
69272	57	87	15	17965	60	89	11
19370	57	90	13	17966	60	90	8
26413	57	95	10	17968	60	90	10
73091	58	70	6	17972	60	90	13
40993	58	72	7	19406	60	92	11
17926	58	72	8	44250	60	93	13
19372	58	72	9	89800	60	95	8
40991	58	75	5	17976	60	95	10
19375	58	75	9	17979	60	100	10
40992	58	75	10	17981	60	100	13
127856	58	75	11	17983	60	110	12
26414	58	75	12	19586	60	110	13
134628	58	76	7	133549	60	120	12
26415	58	76	9	44545	60	130	15
17259	58	78	13	41007	60.5	78	9
120839	58	80	5	17984	61	80	13
17930	58	80	8	41008	61	82.5	13
17931	58	80	10	19410	62	80	10
19381	58	80	12	17988	62	80	12
44231	58	80	13	81258	62	82	10
17934	58	85	10	130159	62	85	8
19385	58	85	12	41011	62	85	9.5
17937	58	85	13	17990	62	85	10
19823	58	86	14	24440	62	85	12
17939	58	90	10	17994	62	85	13
19386	58	90	11	17996	62	90	10
44249	58	90	13	17999	62	90	11
24442	59	80	10	19412	62	90	13
19389	59	85	8	39816	62	95	10
38443	60	70	7	18001	62	100	10
19390	60	72	8	18002	62	100	12
39782	60	72	8.5	72953	62	111	7.5
19862	60	74	10	150445	63	80	8
64232	60	75	7	19415	63	85	10
17942	60	75	8	39819	63	85	12
19392	60	75	9	44251	63	85	13
44232	60	75	10	18005	63	88	10
17944	60	75	12	19417	63	90	10
39785	60	76	10	18006	63	100	13
40999	60	78	7	41016	63	110	12
19394	60	78	9	18007	63	110	13
39788	60	78	10	43962	64	80	7
40898	60	78	13	18009	64	80	8
69612	60	80	7	18012	64	85	10
17947	60	80	8	44323	64	85	12
19397	60	80	9	18013	64	85	13
17949	60	80	10	18016	65	80	8
17953	60	80	12	18018	65	80	10
17956	60	80	13	18021	65	80	12

WA

Sizes metric

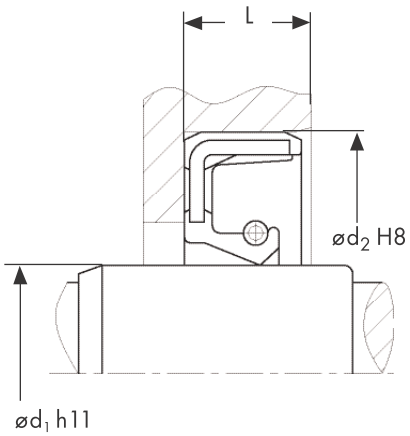

Part No.	Dimensions in mm ød1	ød2	L	Part No.	Dimensions in mm ød1	ød2	L
18008	63.5	90	13	41039	70	90	7
44252	65	80	13	18072	70	90	10
144061	65	82	10	18077	70	90	12
41023	65	82	12	19443	70	90	13
19419	65	85	8	19444	70	92	12
41026	65	85	9	18083	70	92	13
18025	65	85	10	41059	70	92	14
18029	65	85	12	19446	70	95	10
26434	65	85	13	19447	70	95	12
39901	65	86	9.52	18085	70	95	13
35107	65	88	12	41062	70	96	13
18034	65	90	10	41201	70	100	6
18037	65	90	12	60655	70	100	8
18040	65	90	13	18088	70	100	10
44228	65	92	12	18091	70	100	12
18043	65	92	13	18094	70	100	13
18044	65	95	10	41064	70	100	16
18047	65	95	13	18096	70	105	13
18049	65	95	16	19451	70	110	8
80809	65	100	8	65687	70	110	10
18050	65	100	10	18099	70	110	12
18053	65	100	12	19452	70	110	13
18055	65	100	13	39937	70	110	15
18057	65	110	10	18102	70	111	13
41030	65	110	13	18103	70	112	12
26416	65	115	15	19453	70	115	15
117913	65	120	10	83426	70	120	12
19429	65	120	12	18104	70	120	13
18058	65	125	12	35079	70	125	12
39898	66	86	9.52	18105	70	135	12
156163	66	90	10	48694	70	150	12
19430	66	100	11	41067	71	83	12
41031	67	80	6.7	38754	71	88	8
41032	68	79.3	7	18106	72	85	8
36572	68	82	10	20677	72	85	10
24367	68	85	8	19456	72	90	8
38303	68	85	10	38755	72	90	10
44512	68	85	13	19458	72	95	10
18060	68	90	10	24364	72	95	12
44253	68	90	12	18108	72	95	13
24368	68	90	13	18109	72	100	10
19437	68	95	10	18110	72	100	13
19438	68	95	12	38444	72	110	12
18063	68	95	13	39944	73	95	10
18064	68	100	10	35104	73.5	110	10
18065	68	100	13	73092	74	88	10
39915	69	90	10	19825	74	101.4	12
41034	70	80	6	18112	74	105	12
36962	70	81.5	6.5	57182	74	135	15
44370	70	83	5	18114	75	90	8
83613	70	85	6	18115	75	90	10
19441	70	85	7	48802	75	90	12
18066	70	85	8	41074	75	91.5	6
18069	70	85	10	41075	75	92	7
41037	70	86	8.5	69275	75	95	8

WA

Sizes metric

Part No.	Dimensions in mm ød$_1$	ød$_2$	L	Part No.	Dimensions in mm ød$_1$	ød$_2$	L
18118	75	95	10	19678	80	115	10
18121	75	95	12	18171	80	115	12
19462	75	95	13	144063	80	120	12
41076	75	95.5	11	18173	80	120	13
41078	75	100	7	18176	80	125	12
18124	75	100	10	39975	80	125	13
18129	75	100	12	18179	80	130	13
18132	75	100	13	18180	80	140	13
19824	75	101	12	19835	80	145	13
39953	75	102	12	19837	80	150.5	13
41082	75	105	12	19479	82	100	8
39955	75	105	13	18181	82	105	12
41083	75	105	15	19480	82	105	14
35509	75	110	10	18182	82	110	12
18137	75	110	12	89802	83	110	13
19468	75	110	13	41101	85	100	7
19827	75	112	12	44466	85	100	9
35523	75	115	9.52	39980	85	100	10
26272	75	115	10	19481	85	100	12
19469	75	115	12	56417	85	105	8
19828	75	115	16	19483	85	105	10
129757	75	120	8	27002	85	105	12
18140	75	120	12	18190	85	105	13
44381	75	125	12	36054	85	110	10
19470	75	130	12	18193	85	110	12
35526	75	130	13	18698	85	110	13
19832	75	135	13	41104	85	110	15
39961	76	102	12	18200	85	115	13
18141	76	105	13	19489	85	115	15
19472	76	120	12	116534	85	120	10
72773	77	95	10	19490	85	120	12
18142	77	100	10	18202	85	120	13
49549	78	90	8	19492	85	125	7
18143	78	95	11	18204	85	125	12
18144	78	100	10	18206	85	126	13
44233	78	100	13	117914	85	130	10
26417	78	105	13	19494	85	130	12
26418	78	105	15	35529	85	130	12.7
38756	78	110	12	83427	85	140	12
44254	78	110	13	74633	85	150	12
19836	78	150.5	13	35527	85	150	13
36770	80	95	8	19719	85	155	12
39965	80	95	10	69843	86	110	13
18145	80	100	10	18210	87	110	13
19473	80	100	12	61425	88	100	13
18152	80	100	13	83428	88	105	12
26419	80	100	14	18211	88	110	12
18155	80	105	10	18212	88	110	13
27605	80	105	12	150987	88	113	8
18156	80	105	13	41110	88	115	9
18159	80	110	10	18213	88	120	12
18163	80	110	12	150978	88	120	13
18166	80	110	13	26420	88	121.5	12
35575	80	110	14	18214	88	126	12
18170	80	113	12	18216	88	128	12

WA

Sizes metric

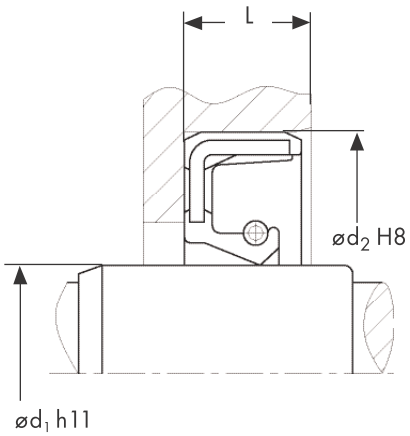

Part No.	Dimensions in mm ød1	ød2	L	Part No.	Dimensions in mm ød1	ød2	L
9493	88	140	12	18321	95	170.5	12
18217	88	140	13	19819	95	170.5	13
19838	88	150.5	13	19811	95	180.5	13
19839	88	150.5	15	52105	96	112	10
120840	89.7	105	6	19834	96	135.7	12
19496	90	110	8	18282	96	136	12
39989	90	110	10	41134	97	127	13
18222	90	110	12	18283	97	130	14
22355	90	110	13	19737	97	167	13
39990	90	110	15	18284	98	120	13
39991	90	115	8	34700	98	125	10
27457	90	115	9	18454	98	125	13
18231	90	115	10	18285	98	128	10
18232	90	115	13	19812	98	180.5	13
72646	90	120	10	18286	100	115	9
18234	90	120	12	18288	100	120	10
19501	90	120	13	19515	100	120	11
69273	90	120	14	18291	100	120	12
75829	90	120	15	19517	100	120	13
19503	90	125	13	40009	100	125	10
19831	90	125	14	18293	100	125	12
38445	90	130	12	19519	100	125	13
18243	90	130	13	27030	100	125	15
19833	90	135.7	13	18297	100	127	13
19504	90	140	13	93307	100	130	10
18246	90	155.2	12	18298	100	130	12
35316	90	160	12	18299	100	130	13
19592	90	167	14	83429	100	130	14
18247	91	136	12	36505	100	135	12
81260	92	110	12	36799	100	135	13
40000	92	120	12	19525	100	140	12
18699	92	120	13	18302	100	140	13
18249	92	120	14	117915	100	150	12
36372	95	110	9	18304	100	150	13
38446	95	110	10	37098	100	150	15
18254	95	110	12	52481	100	160	12
44255	95	110	13	40014	100	180	12
75826	95	115	8	35528	100	180	13
19509	95	115	11	19817	100	185	13
18259	95	115	13	26436	102	135	13
18264	95	120	12	40018	104	125	10
18267	95	120	13	52490	104	130	10
18270	95	125	12	19813	104	180.5	
18272	95	125	13	38802	105	120	10
41130	95	125	16	19526	105	125	10
18275	95	127	12	18308	105	125	13
37596	95	130	12	18311	105	130	12
18276	95	130	13	19530	105	130	13
26421	95	130	15	38447	105	130	15
40004	95	132	12	18315	105	135	13
18278	95	135	13	26422	105	135	14
18279	95	136	13	18316	105	140	12
59485	95	145	13	18318	105	140	13
18280	95	150	15	56611	105	140	16
18281	95	160	15	18323	105	145	16

WA

Sizes metric

Part No.	Dimensions in mm ød$_1$	ød$_2$	L	Part No.	Dimensions in mm ød$_1$	ød$_2$	L
44798	105	150	15	26457	120	140	10
19809	105	170.5	12	44244	120	140	12
18324	107	150	15	18364	120	140	13
40023	108	130	12	44256	120	140	14
40024	108	130	13	19542	120	145	12
41151	108	133.5	13	18367	120	150	12
18325	108	145	15	18369	120	150	13
41153	110	125	12	19544	120	150	15
26423	110	125	13	19841	120	150.5	13
38448	110	130	8	18686	120	160	12
68272	110	130	10	18373	120	160	13
18327	110	130	12	44241	120	160	14
19535	110	130	13	18375	120	160	15
36246	110	130	14	26425	120	195	13
38449	110	130	14.5	18377	122	150	15
26424	110	135	12	38451	125	140	10
18331	110	135	13	38251	125	143	12
56984	110	140	10	69856	125	145	7.5
18333	110	140	12	18378	125	150	12
18335	110	140	13	26253	125	150	13
44991	110	140	14	61439	125	150	14
18340	110	145	13	18381	125	150	15
41165	110	145	14	38452	125	155	12
27035	110	145	15	18687	125	160	12
151982	110	150	12	44257	125	160	13
18341	110	150	13	18383	125	160	15
18343	110	150	15	19815	125	180.5	13
19840	110	150.5	14	40050	127	150	13
18344	110	155	15	19316	127	170	14
41166	110	159	14	18386	128	146	13.5
122137	110	160	8	27680	128	150	13
68273	110	160	10	18387	128	150	14
115893	110	160	12	52926	128	158	13
18345	110	160	15	20496	130	140	10
19818	110	200.5	13	38453	130	150	10
41168	112	125	9	133233	130	155	10
18346	112	140	13	18388	130	160	12
41169	114	127	9	22356	130	160	13
35888	114	140	13	65688	130	160	14
18348	115	130	12	18391	130	160	15
44854	115	130	13	40055	130	165	13
38450	115	140	10	44258	130	165	15
18350	115	140	12	18393	130	170	12
18353	115	140	13	22357	130	170	13
18357	115	145	13	44259	130	170	14
19539	115	145	14	18395	130	170	15
60195	115	145	15	19816	130	182	16
18358	115	150	12	40057	130	230	14
18359	115	150	13	83430	132.5	155.6	13
18362	115	160	15	22627	135	155	12
19810	115	170.5	13	22358	135	160	12
19814	115	180.5	13	18398	135	160	13
38025	115	190	15	69274	135	160	14
18685	118	140	13	18400	135	160	15
121537	118	150	15	18403	135	165	12

WA

Sizes metric

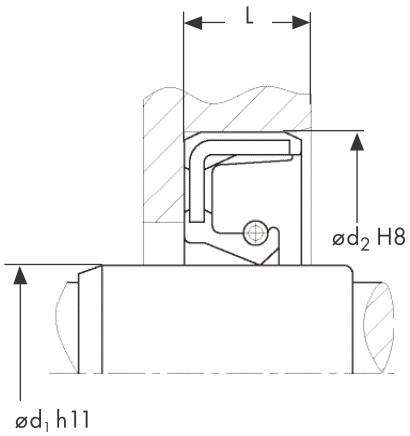

Part No.	Dimensions in mm ød1	ød2	L	Part No.	Dimensions in mm ød1	ød2	L
60183	135	165	15	57697	155	180	14
19550	135	170	12	44264	155	180	15
41397	135	170	15	26426	155	190	15
44748	135	170	18	44265	155	200	15
26383	135	180	15	41402	156	196	20
40062	135	190	14	18433	158	180	15
18404	135	190	15	41403	158	190	15
18405	135	192	16	68274	160	180	10
34837	138	160	15	44245	160	180	12
68275	140	160	10	38757	160	180	15
18406	140	160	13	18434	160	185	10
44260	140	160	15	18436	160	185	15
53093	140	165	12	18437	160	190	13
44261	140	165	15	65717	160	190	14
18410	140	170	12	18438	160	190	15
40065	140	170	13	40083	160	195	18
44262	140	170	14	18439	160	200	12
18413	140	170	15	19560	160	200	14
37263	140	170	18	18440	160	200	15
19553	140	180	12	69747	161	215	15
38454	140	180	13	36373	162	190	12
65689	140	180	14	18442	165	190	13
19554	140	180	15	41400	165	191	15
148662	140	190	15	41404	165	195	13
122138	140	215	8	127301	165	200	9
115783	140	215	12	26382	165	200	15
74410	143	175	16	121789	169	184	7
19152	144	160	12	25675	170	190	13
44092	145	160	10	81160	170	190	15
19239	145	165	13	18445	170	200	12
44263	145	165	15	72647	170	200	14
18418	145	170	15	18446	170	200	15
41398	145	175	12	10831	170	200	16
18420	145	175	15	60653	170	210	14
19556	145	180	12	40087	170	220	15
21585	145	180	13	68277	175	195	13
22359	145	180	14	54700	175	200	10
74657	145	185	15	18449	175	200	15
53969	146	163	7	21917	175	205	15
38455	148	170	14.5	21579	175	210	14
41512	150	162	9	43936	175	220	17
41399	150	164	16	43938	175	250	16
18422	150	168	12	43937	177	250	16
39234	150	168	13	18451	178	208	15
21586	150	170	12	68276	180	200	10
19764	150	170	13	22360	180	200	13
18424	150	170	15	34838	180	200	15
18425	150	180	12	57187	180	210	10
19665	150	180	13	18453	180	210	15
41401	150	180	14	22254	180	215	16
18428	150	180	15	19870	180	220	15
132876	150	190	15	44269	180	220	16
39999	150	200	15	18455	185	210	13
40078	155	174	12	64800	185	215	15
54384	155	175	12	83432	185	215	16

WA

Sizes metric

Part No.	Dimensions in mm ød$_1$	ød$_2$	L	Part No.	Dimensions in mm ød$_1$	ød$_2$	L
40094	190	220	12	18469	240	280	15
18457	190	220	15	76105	240	280	16
44266	190	220	16	44751	240	280	19
22255	190	225	12	126466	240	335	15
18459	190	225	15	116185	250	270	12
27682	190	225	16	18471	250	280	15
72641	190	230	15	19568	250	280	16
54887	192	210	10	34689	250	290	15
83373	195	215	15	10846	250	290	16
20227	195	230	16	55199	260	290	15
22256	195	230	17	18472	260	290	16
122009	195	235	15	125445	260	290	20
41405	198	230	12	72643	260	300	15
18461	200	225	15	20010	260	300	18
38456	200	230	13	25806	260	300	20
18462	200	230	15	38458	265	290	16
44267	200	230	16	118312	265	310	16
56694	200	235	16	90276	270	300	15
37650	200	235	18	72644	270	310	15
63209	200	240	15	156355	270	310	16
25906	200	250	15	64572	270	310	20
153719	200	310	18	135146	270	320	18
34839	205	230	15	44753	270	330	25
22259	205	230	16	65051	275	294	12
60265	205	250	16	21348	280	310	15
19566	210	240	15	41408	280	316	18
18465	210	250	15	72645	280	320	15
41406	210	250	16	44754	280	320	18
41407	210	265	25	21580	280	320	20
83433	210	290	20	44755	280	340	28
57290	212	245	16	76586	285	325	16
18690	215	240	12	75096	287	330	18
36247	215	240	15	26427	290	334	20
27683	215	250	16	27639	300	320	20
40098	220	245	8	152234	300	335	18
83434	220	250	12	56792	300	340	15
55973	220	250	14	17150	300	340	16
18466	220	250	15	18473	300	340	18
38758	220	250	16	35553	300	340	20
37649	220	255	16	44756	300	350	25
10861	220	255	18	83013	305	330	13
60268	220	260	15	82111	310	350	18
38457	220	260	16	44758	310	370	25
44749	220	260	22	42989	315	350	18
40099	225	250	15	40666	315	355	18
43956	230	250	15	61790	315	359	20
27684	230	255	15	42990	320	360	18
19567	230	260	15	25673	320	360	20
44750	230	269	22	44759	320	380	25
72642	230	270	15	69153	320	380	28
18468	230	280	15	41409	320	410	28
40646	230	280	16	24895	330	370	18
20230	240	270	15	69585	330	390	25
83435	240	275	16	152869	335	375	18
10876	240	275	18	148836	340	380	15

WA

Sizes metric

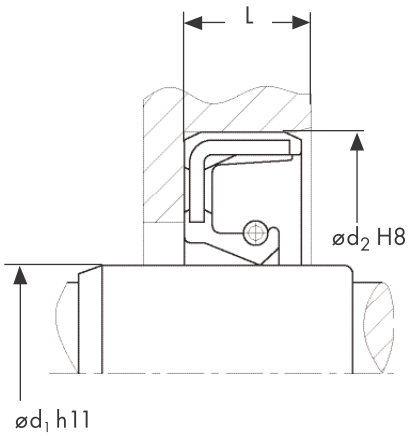

Part No.	Dimensions in mm ød1	ød2	L
20887	340	380	18
36509	340	380	20
57272	340	390	25
38459	350	390	18
76106	350	390	20
41417	350	410	28
56254	360	390	18
76178	360	400	16
56793	360	400	18
35406	360	400	20
20222	370	410	15
143786	380	400	10
37305	380	420	15
24746	380	420	18
38461	380	420	20
40101	380	424	20
83436	390	430	20
38462	394	420	16
76107	400	440	18
69573	400	440	20
83682	400	450	25
39233	420	460	20
43648	420	470	15
131224	420	470	25
37996	430	460	14
36709	440	480	20
149672	450	470	10
143685	450	490	20
38463	450	500	22
76108	450	500	25
69556	450	510	25
83721	460	500	20
82378	467	510	20
117306	470	520	22
38464	480	520	20
76110	480	530	25
56356	480	540	25
37583	485	535	22
20709	490	540	25
38465	500	540	20
37582	500	550	22
76109	500	550	25
20223	530	580	22
76014	550	600	25
126499	560	610	20
156277	565	600	20
20671	600	640	20
131223	600	650	25
37581	620	684	25
80861	660	700	20

WA

Sizes inch

Part No.	Dimensions in mm			Dimensions in inch		
	ød$_1$	ød$_2$	L	ød$_1$	ød$_2$	L
19997	6.35	19.05	6.35	0.25	0.75	0.25
59667	7.93	15.87	3.96	0.312	0.625	0.156
37883	7.93	17.46	7.93	0.312	0.687	0.312
19875	7.93	19.05	6.35	0.312	0.75	0.25
37268	7.93	19.05	7.93	0.312	0.75	0.312
20795	7.93	22.22	6.35	0.312	0.875	0.25
59668	8.05	22.22	6.35	0.317	0.875	0.25
19876	9.52	19.05	6.35	0.375	0.75	0.25
19998	9.52	22.22	6.35	0.375	0.875	0.25
19999	11.11	22.22	6.35	0.437	0.875	0.25
19991	11.11	25.4	6.35	0.437	1	0.25
59669	11.11	25.4	7.93	0.437	1	0.312
20000	11.11	28.57	9.52	0.437	1.125	0.375
83439	12.45	26.97	6.35	0.49	1.062	0.25
19877	12.7	22.22	6.35	0.5	0.875	0.25
20652	12.7	25.4	4.76	0.5	1	0.187
20001	12.7	25.4	6.35	0.5	1	0.25
19879	12.7	25.4	9.52	0.5	1	0.375
19881	12.7	28.57	6.35	0.5	1.125	0.25
19882	12.7	28.57	7.93	0.5	1.125	0.312
20002	12.7	28.57	9.52	0.5	1.125	0.375
20003	12.7	31.75	6.35	0.5	1.25	0.25
37930	12.7	31.75	9.52	0.5	1.25	0.375
20004	14.28	25.4	6.35	0.562	1	0.25
20005	14.28	28.57	6.35	0.562	1.125	0.25
19883	14.28	28.57	9.52	0.562	1.125	0.375
20242	14.28	34.92	7.93	0.562	1.375	0.312
19878	15.87	23.81	4.76	0.625	0.937	0.187
20006	15.87	25.4	4.76	0.625	1	0.187
19880	15.87	25.4	6.35	0.625	1	0.25
57047	15.87	28.55	4	0.625	1.124	0.157
19884	15.87	28.57	6.35	0.625	1.125	0.25
20007	15.87	28.57	7.93	0.625	1.125	0.312
20008	15.87	28.57	9.52	0.625	1.125	0.375
20009	15.87	31.75	6.35	0.625	1.25	0.25
19887	15.87	31.75	7.93	0.625	1.25	0.312
19888	15.87	31.75	9.52	0.625	1.25	0.375
19891	15.87	33.33	6.35	0.625	1.312	0.25
20011	15.87	34.92	6.35	0.625	1.375	0.25
19892	15.87	34.92	7.93	0.625	1.375	0.312
20012	15.87	34.92	9.52	0.625	1.375	0.375
20239	15.87	38.1	6.35	0.625	1.5	0.25
19900	15.87	38.1	9.52	0.625	1.5	0.375
59670	15.87	40.08	6.35	0.625	1.578	0.25
59671	16.51	38.1	6.35	0.65	1.5	0.25
20799	16.67	38.1	6.35	0.656	1.5	0.25
59672	16.67	40.08	6.35	0.656	1.578	0.25
19885	17.46	28.57	6.35	0.687	1.125	0.25
20013	17.46	31.75	6.35	0.687	1.25	0.25
20014	17.46	34.92	9.52	0.687	1.375	0.375
59673	17.53	27.94	6.85	0.69	1.1	0.27
59674	17.78	38.1	7.52	0.7	1.5	0.296
83277	19.05	25.4	4.76	0.75	1	0.187
21856	19.05	28.57	4.76	0.75	1.125	0.187
19886	19.05	28.57	6.35	0.75	1.125	0.25

WA

Sizes inch

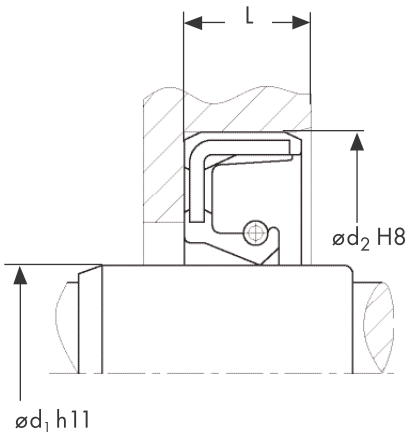

Part No.	Dimensions in mm ød1	ød2	L	Dimensions in inch ød1	ød2	L
20015	19.05	30.16	6.35	0.75	1.187	0.25
21117	19.05	31.75	4.76	0.75	1.25	0.187
19889	19.05	31.75	6.35	0.75	1.25	0.25
19890	19.05	31.75	7.93	0.75	1.25	0.312
20016	19.05	31.75	9.52	0.75	1.25	0.375
20017	19.05	33.33	6.35	0.75	1.312	0.25
20018	19.05	33.33	7.93	0.75	1.312	0.312
19893	19.05	34.92	6.35	0.75	1.375	0.25
19894	19.05	34.92	7.93	0.75	1.375	0.312
20019	19.05	34.92	9.52	0.75	1.375	0.375
19903	19.05	38.1	6.35	0.75	1.5	0.25
20020	19.05	38.1	7.93	0.75	1.5	0.312
19901	19.05	38.1	9.52	0.75	1.5	0.375
20021	19.05	41.27	7.93	0.75	1.625	0.312
20022	19.05	41.27	9.52	0.75	1.625	0.375
20804	19.05	44.45	7.93	0.75	1.75	0.312
35307	19.05	57.15	12.7	0.75	2.25	0.5
59675	19.2	28.57	6.35	0.756	1.125	0.25
19867	19.84	31.75	6.35	0.781	1.25	0.25
20023	19.84	34.92	4.7	0.781	1.375	0.185
20024	19.84	38.1	7.9	0.781	1.5	0.311
21153	20.63	30.16	6.35	0.812	1.187	0.25
19895	20.63	34.92	6.35	0.812	1.375	0.25
19896	20.63	34.92	9.52	0.812	1.375	0.375
20244	20.63	38.1	6.35	0.812	1.5	0.25
20797	22.22	31.75	4.76	0.875	1.25	0.187
20240	22.22	31.75	6.35	0.875	1.25	0.25
20241	22.22	31.75	7.93	0.875	1.25	0.312
20243	22.22	34.92	4.76	0.875	1.375	0.187
20025	22.22	34.92	6.35	0.875	1.375	0.25
19897	22.22	34.92	7.93	0.875	1.375	0.312
19898	22.22	34.92	9.52	0.875	1.375	0.375
19902	22.22	38.1	6.35	0.875	1.5	0.25
20026	22.22	38.1	7.93	0.875	1.5	0.312
19904	22.22	38.1	9.52	0.875	1.5	0.375
19908	22.22	41.27	9.52	0.875	1.625	0.375
20805	22.22	44.45	9.52	0.875	1.75	0.375
20808	22.22	47.62	9.52	0.875	1.875	0.375
20812	22.22	50.8	9.52	0.875	2	0.375
43747	23.81	36.51	6.35	0.937	1.437	0.25
19905	23.81	38.1	9.52	0.937	1.5	0.375
20027	23.81	44.45	9.52	0.937	1.75	0.375
156934	24.5	47.62	6.35	0.965	1.875	0.25
60753	24.87	34.92	6.83	0.979	1.375	0.269
20798	25.4	34.92	4.76	1	1.375	0.187
19899	25.4	36.51	6.35	1	1.437	0.25
19906	25.4	38.1	6.35	1	1.5	0.25
20028	25.4	38.1	7.93	1	1.5	0.312
20029	25.4	38.1	9.52	1	1.5	0.375
20801	25.4	39.69	7.93	1	1.563	0.312
81358	25.4	41	5	1	1.614	0.197
20030	25.4	41.27	6.35	1	1.625	0.25
20031	25.4	41.27	7.93	1	1.625	0.312
20032	25.4	41.27	9.52	1	1.625	0.375
37597	25.4	44.45	5.95	1	1.75	0.234

WA

Sizes inch

Part No.	Dimensions in mm			Dimensions in inch		
	ød$_1$	ød$_2$	L	ød$_1$	ød$_2$	L
19911	25.4	44.45	6.35	1	1.75	0.25
19912	25.4	44.45	9.52	1	1.75	0.375
19916	25.4	46.04	9.52	1	1.813	0.375
61828	25.4	46.43	11	1	1.828	0.433
20809	25.4	47.62	6.35	1	1.875	0.25
20033	25.4	47.62	9.52	1	1.875	0.375
20034	25.4	50.8	6.35	1	2	0.25
19921	25.4	50.8	9.52	1	2	0.375
19922	25.4	50.8	12.7	1	2	0.5
20035	25.4	52.38	9.52	1	2.062	0.375
20036	25.4	53.97	9.52	1	2.125	0.375
20037	25.4	57.15	9.52	1	2.25	0.375
20800	26.98	38.1	6.35	1.062	1.5	0.25
19909	26.98	41.27	7.93	1.062	1.625	0.312
20038	26.98	44.45	9.52	1.062	1.75	0.375
59676	26.98	47.62	9.52	1.062	1.875	0.375
59677	26.98	55.56	7.93	1.062	2.187	0.312
19907	28.57	38.1	6.35	1.125	1.5	0.25
57060	28.57	39.69	6.35	1.125	1.563	0.25
21668	28.57	39.69	9.52	1.125	1.563	0.375
19910	28.57	41.27	6.35	1.125	1.625	0.25
20039	28.57	41.27	7.93	1.125	1.625	0.312
20040	28.57	41.27	9.52	1.125	1.625	0.375
95606	28.57	44.45	5.33	1.125	1.75	0.21
20041	28.57	44.45	7.93	1.125	1.75	0.312
20042	28.57	44.45	9.52	1.125	1.75	0.375
19913	28.57	44.45	11.11	1.125	1.75	0.437
80695	28.57	45.24	7.14	1.125	1.781	0.281
80696	28.57	45.24	9.52	1.125	1.781	0.375
19917	28.57	47.62	6.35	1.125	1.875	0.25
19918	28.57	47.62	9.52	1.125	1.875	0.375
20043	28.57	50.8	9.52	1.125	2	0.375
20044	28.57	50.8	11.11	1.125	2	0.437
19923	28.57	50.8	12.7	1.125	2	0.5
20045	28.57	52.38	9.52	1.125	2.062	0.375
20046	28.57	53.97	9.52	1.125	2.125	0.375
20047	28.57	57.15	9.52	1.125	2.25	0.375
60207	28.57	57.4	9.52	1.125	2.26	0.375
59678	30.16	42.86	4.76	1.187	1.687	0.187
20048	30.16	42.86	9.52	1.187	1.687	0.375
19914	30.16	44.45	4.76	1.187	1.75	0.187
20806	30.16	44.45	6.35	1.187	1.75	0.25
59679	30.16	44.45	11.11	1.187	1.75	0.437
20810	30.16	47.62	7.93	1.187	1.875	0.312
59680	30.16	49.21	4.76	1.187	1.937	0.187
44853	30.16	49.21	6.35	1.187	1.937	0.25
20049	30.16	50.8	6.35	1.187	2	0.25
76152	30.16	50.8	7.93	1.187	2	0.312
19924	30.16	50.8	9.52	1.187	2	0.375
20050	30.16	52.38	6.35	1.187	2.062	0.25
37096	31.75	38.1	3.96	1.25	1.5	0.156
41492	31.75	39.69	6.35	1.25	1.563	0.25
20802	31.75	41.27	6.35	1.25	1.625	0.25
20803	31.75	42.86	9.52	1.25	1.687	0.375
20807	31.75	44.45	6.35	1.25	1.75	0.25

WA

Sizes inch

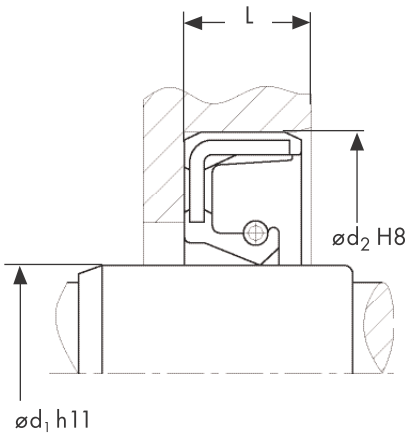

Part No.	Dimensions in mm ød1	ød2	L	Dimensions in inch ød1	ød2	L
19915	31.75	44.45	9.52	1.25	1.75	0.375
20228	31.75	44.45	9.92	1.25	1.75	0.391
37097	31.75	44.68	6.35	1.25	1.759	0.25
20051	31.75	47.62	6.35	1.25	1.875	0.25
20052	31.75	47.62	7.93	1.25	1.875	0.312
20053	31.75	47.62	9.52	1.25	1.875	0.375
20811	31.75	49.21	11.11	1.25	1.937	0.437
20054	31.75	50.8	6.35	1.25	2	0.25
20055	31.75	50.8	7.93	1.25	2	0.312
20056	31.75	50.8	9.52	1.25	2	0.375
59681	31.75	50.8	10.31	1.25	2	0.406
19925	31.75	50.8	12.7	1.25	2	0.5
20057	31.75	52.38	9.52	1.25	2.062	0.375
19931	31.75	53.97	7.93	1.25	2.125	0.312
20058	31.75	53.97	9.52	1.25	2.125	0.375
20813	31.75	55.56	11.11	1.25	2.187	0.437
19935	31.75	57.15	7.93	1.25	2.25	0.312
19936	31.75	57.15	9.52	1.25	2.25	0.375
20059	31.75	57.15	12.7	1.25	2.25	0.5
20060	31.75	60.32	9.52	1.25	2.375	0.375
20061	31.75	63.5	9.52	1.25	2.5	0.375
20840	31.75	69.85	9.52	1.25	2.75	0.375
40736	31.9	44.6	6.4	1.256	1.756	0.252
59682	33.33	46.99	6.35	1.312	1.85	0.25
59683	33.33	47.22	6.35	1.312	1.859	0.25
19919	33.33	47.62	7.93	1.312	1.875	0.312
69433	33.33	49.21	4.76	1.312	1.937	0.187
59684	33.33	53.97	9.52	1.312	2.125	0.375
66879	33.4	49.3	9.5	1.315	1.941	0.374
68260	33.85	63.5	12.7	1.333	2.5	0.5
130831	34.13	53.95	7.93	1.344	2.124	0.312
59685	34.92	47.62	3.17	1.375	1.875	0.125
20062	34.92	47.62	6.35	1.375	1.875	0.25
19920	34.92	47.62	7.93	1.375	1.875	0.312
19926	34.92	50.8	7.93	1.375	2	0.312
20063	34.92	50.8	9.52	1.375	2	0.375
20064	34.92	50.8	12.7	1.375	2	0.5
20245	34.92	52.38	6.35	1.375	2.062	0.25
20065	34.92	52.38	9.52	1.375	2.062	0.375
19928	34.92	52.38	12.7	1.375	2.062	0.5
19932	34.92	53.97	7.93	1.375	2.125	0.312
19992	34.92	53.97	9.52	1.375	2.125	0.375
60225	34.92	54.23	7.93	1.375	2.135	0.312
19937	34.92	57.15	9.52	1.375	2.25	0.375
19938	34.92	57.15	12.7	1.375	2.25	0.5
59695	34.92	58.73	11.11	1.375	2.312	0.437
20835	34.92	60.32	9.52	1.375	2.375	0.375
19988	34.92	60.32	12.7	1.375	2.375	0.5
20066	34.92	63.5	9.52	1.375	2.5	0.375
19946	34.92	63.5	12.7	1.375	2.5	0.5
20067	34.92	66.67	9.52	1.375	2.625	0.375
37598	34.92	69.85	9.52	1.375	2.75	0.375
21027	34.92	69.85	12.7	1.375	2.75	0.5
21025	36.51	53.97	6.35	1.437	2.125	0.25
20068	36.51	57.15	9.52	1.437	2.25	0.375

WA

Sizes inch

Part No.	Dimensions in mm			Dimensions in inch		
	ød$_1$	ød$_2$	L	ød$_1$	ød$_2$	L
37488	36.51	60.32	9.52	1.437	2.375	0.375
20069	36.51	63.5	12.7	1.437	2.5	0.5
20070	38.1	47.62	9.52	1.5	1.875	0.375
83418	38.1	50.29	12.7	1.5	1.98	0.5
59696	38.1	50.8	5.56	1.5	2	0.219
19927	38.1	50.8	6.35	1.5	2	0.25
20071	38.1	50.8	12.7	1.5	2	0.5
19929	38.1	52.38	6.35	1.5	2.062	0.25
19930	38.1	52.38	7.93	1.5	2.062	0.312
20072	38.1	52.38	9.52	1.5	2.062	0.375
20073	38.1	53.97	9.52	1.5	2.125	0.375
20074	38.1	55.56	7.93	1.5	2.187	0.312
19934	38.1	55.56	9.52	1.5	2.187	0.375
59697	38.1	57.15	6.35	1.5	2.25	0.25
20075	38.1	57.15	7.93	1.5	2.25	0.312
19939	38.1	57.15	9.52	1.5	2.25	0.375
19940	38.1	57.15	12.7	1.5	2.25	0.5
19993	38.1	60.32	9.52	1.5	2.375	0.375
59698	38.1	60.32	11.11	1.5	2.375	0.437
20076	38.1	60.32	12.7	1.5	2.375	0.5
20837	38.1	61.91	9.52	1.5	2.437	0.375
20077	38.1	63.5	6.35	1.5	2.5	0.25
19947	38.1	63.5	7.93	1.5	2.5	0.312
20078	38.1	63.5	9.52	1.5	2.5	0.375
37674	38.1	63.5	11.11	1.5	2.5	0.437
19948	38.1	63.5	12.7	1.5	2.5	0.5
39537	38.1	65.08	12	1.5	2.562	0.472
20079	38.1	66.67	12.7	1.5	2.625	0.5
60243	38.1	69.85	9.52	1.5	2.75	0.375
20841	38.1	69.85	12.7	1.5	2.75	0.5
35367	38.1	73.02	11.11	1.5	2.875	0.437
59702	39.68	52.38	4.76	1.562	2.062	0.187
44803	39.68	57.15	7.93	1.562	2.25	0.312
20814	39.68	57.15	9.52	1.562	2.25	0.375
59699	39.68	58.75	9.52	1.562	2.313	0.375
19943	39.68	60.32	9.52	1.562	2.375	0.375
24674	39.68	62.5	12.7	1.562	2.461	0.5
20080	39.68	63.5	7.93	1.562	2.5	0.312
59700	39.68	63.5	9.52	1.562	2.5	0.375
20081	39.68	66.67	9.52	1.562	2.625	0.375
36462	39.68	68.26	9.52	1.562	2.687	0.375
83419	40.08	50.85	4.1	1.578	2.002	0.161
59703	41.27	50.8	12.7	1.625	2	0.5
20082	41.27	53.97	6.35	1.625	2.125	0.25
20083	41.27	55.56	9.52	1.625	2.187	0.375
20084	41.27	57.15	9.52	1.625	2.25	0.375
19944	41.27	60.32	7.93	1.625	2.375	0.312
20085	41.27	60.32	9.52	1.625	2.375	0.375
20086	41.27	60.32	12.7	1.625	2.375	0.5
20246	41.27	61.91	12.7	1.625	2.437	0.5
20087	41.27	63.5	7.93	1.625	2.5	0.312
20088	41.27	63.5	9.52	1.625	2.5	0.375
19949	41.27	63.5	12.7	1.625	2.5	0.5
20838	41.27	65.08	9.52	1.625	2.562	0.375
20089	41.27	66.67	9.52	1.625	2.625	0.375

WA

Sizes inch

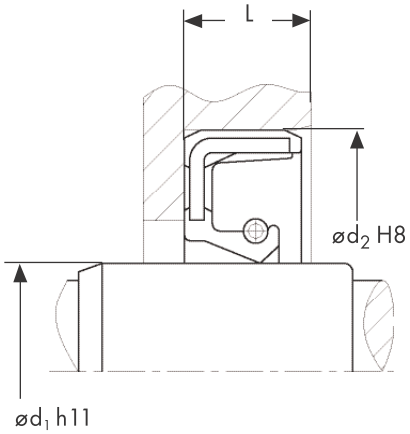

Part No.	Dimensions in mm ød1	ød2	L	Dimensions in inch ød1	ød2	L
20090	41.27	66.67	12.7	1.625	2.625	0.5
72954	41.27	68.26	12.7	1.625	2.687	0.5
20091	41.27	69.85	9.52	1.625	2.75	0.375
20092	41.27	69.85	12.7	1.625	2.75	0.5
35552	41.27	73.02	7.93	1.625	2.875	0.312
20842	41.27	73.02	12.7	1.625	2.875	0.5
21522	42.86	57.15	7.93	1.687	2.25	0.312
20093	42.86	63.5	9.52	1.687	2.5	0.375
19950	42.86	63.5	12.7	1.687	2.5	0.5
20247	42.86	68.26	12.7	1.687	2.687	0.5
35309	42.86	76.2	12.7	1.687	3	0.5
59704	43.26	61.11	9.52	1.703	2.406	0.375
19933	44.45	53.97	4.76	1.75	2.125	0.187
20094	44.45	57.15	7.93	1.75	2.25	0.312
19941	44.45	57.15	9.52	1.75	2.25	0.375
20095	44.45	57.15	12.7	1.75	2.25	0.5
19942	44.45	58.73	6.35	1.75	2.312	0.25
19945	44.45	60.32	7.93	1.75	2.375	0.312
20096	44.45	60.32	9.52	1.75	2.375	0.375
20097	44.45	60.32	12.7	1.75	2.375	0.5
20836	44.45	61.91	7.93	1.75	2.437	0.312
19951	44.45	63.5	7.93	1.75	2.5	0.312
19986	44.45	63.5	9.52	1.75	2.5	0.375
19952	44.45	63.5	12.7	1.75	2.5	0.5
74038	44.45	65.08	7.93	1.75	2.562	0.312
20098	44.45	66.67	9.52	1.75	2.625	0.375
20099	44.45	66.67	12.7	1.75	2.625	0.5
59705	44.45	68.26	11.11	1.75	2.687	0.437
35072	44.45	68.26	12.7	1.75	2.687	0.5
72738	44.45	69.1	12.7	1.75	2.72	0.5
19957	44.45	69.85	9.52	1.75	2.75	0.375
20100	44.45	69.85	12.7	1.75	2.75	0.5
20101	44.45	73.02	9.52	1.75	2.875	0.375
20102	44.45	73.02	12.7	1.75	2.875	0.5
20103	44.45	76.2	9.52	1.75	3	0.375
144614	44.45	80.77	12.7	1.75	3.18	0.5
20816	44.45	80.96	12.7	1.75	3.187	0.5
59706	45.64	65.23	10.59	1.797	2.568	0.417
19953	46.03	63.5	6.35	1.812	2.5	0.25
20104	46.03	63.5	9.52	1.812	2.5	0.375
20839	46.03	66.67	9.52	1.812	2.625	0.375
20105	46.03	69.85	12.7	1.812	2.75	0.5
56408	46.03	76.2	9.52	1.812	3	0.375
31011	46.8	61.3	4	1.843	2.413	0.157
39673	47.02	66.67	9.52	1.851	2.625	0.375
20106	47.62	60.32	6.35	1.875	2.375	0.25
20107	47.62	63.5	6.35	1.875	2.5	0.25
20108	47.62	63.5	7.93	1.875	2.5	0.312
20109	47.62	63.5	9.52	1.875	2.5	0.375
19954	47.62	63.5	12.7	1.875	2.5	0.5
19955	47.62	65.08	6.35	1.875	2.562	0.25
20110	47.62	66.67	9.52	1.875	2.625	0.375
20111	47.62	66.67	12.7	1.875	2.625	0.5
20112	47.62	69.85	9.52	1.875	2.75	0.375
19958	47.62	69.85	12.7	1.875	2.75	0.5

WA

Sizes inch

Part No.	Dimensions in mm			Dimensions in inch		
	ød$_1$	ød$_2$	L	ød$_1$	ød$_2$	L
20113	47.62	73.02	9.52	1.875	2.875	0.375
20114	47.62	73.02	12.7	1.875	2.875	0.5
20115	47.62	76.2	9.52	1.875	3	0.375
20116	47.62	76.2	12.7	1.875	3	0.5
19966	47.62	80.96	12.7	1.875	3.187	0.5
152498	47.62	82.6	11.5	1.875	3.252	0.453
20117	49.21	63.5	9.52	1.937	2.5	0.375
20118	49.21	69.85	9.52	1.937	2.75	0.375
59707	49.21	76.2	12.7	1.937	3	0.5
59708	50.8	60.32	4.76	2	2.375	0.187
20119	50.8	63.5	6.35	2	2.5	0.25
20120	50.8	66.67	9.52	2	2.625	0.375
19956	50.8	68.26	9.52	2	2.687	0.375
20121	50.8	68.26	12.7	2	2.687	0.5
20122	50.8	69.85	6.35	2	2.75	0.25
19959	50.8	69.85	9.52	2	2.75	0.375
59709	50.8	69.85	11.11	2	2.75	0.437
19960	50.8	69.85	12.7	2	2.75	0.5
20123	50.8	73.02	9.52	2	2.875	0.375
39753	50.8	73.02	12.7	2	2.875	0.5
81229	50.8	73.81	7.93	2	2.906	0.312
28009	50.8	74.18	7.93	2	2.92	0.312
20124	50.8	76.2	9.52	2	3	0.375
20125	50.8	76.2	12.7	2	3	0.5
20844	50.8	79.37	9.52	2	3.125	0.375
20126	50.8	82.55	9.52	2	3.25	0.375
20127	50.8	85.72	12.7	2	3.375	0.5
20128	50.8	88.9	12.7	2	3.5	0.5
20129	52.38	66.67	7.93	2.062	2.625	0.312
19961	52.38	73.02	9.52	2.062	2.875	0.375
19963	52.38	76.2	9.52	2.062	3	0.375
22234	52.38	80.96	9.52	2.062	3.187	0.375
31610	52.38	80.96	11.43	2.062	3.187	0.45
59710	53.28	80.26	9.52	2.098	3.16	0.375
20130	53.97	66.67	4.76	2.125	2.625	0.187
20131	53.97	68.26	7.93	2.125	2.687	0.312
20132	53.97	69.85	7.93	2.125	2.75	0.312
20133	53.97	69.85	9.52	2.125	2.75	0.375
20134	53.97	73.02	9.52	2.125	2.875	0.375
20135	53.97	73.02	12.7	2.125	2.875	0.5
20136	53.97	76.2	9.52	2.125	3	0.375
19964	53.97	76.2	12.7	2.125	3	0.5
20137	53.97	79.37	9.52	2.125	3.125	0.375
40957	53.97	79.37	11.11	2.125	3.125	0.437
37655	53.97	79.37	12.7	2.125	3.125	0.5
20138	53.97	85.72	12.7	2.125	3.375	0.5
20139	53.97	88.9	12.7	2.125	3.5	0.5
37311	54.77	82.55	9.52	2.156	3.25	0.375
59711	54.99	81.99	11.99	2.165	3.228	0.472
21563	55.56	73.02	9.52	2.187	2.875	0.375
20933	55.56	76.2	9.52	2.187	3	0.375
20843	55.56	76.2	12.7	2.187	3	0.5
130334	56	82.55	12.7	2.205	3.25	0.5
49470	56.48	84.93	13	2.224	3.344	0.512
20140	57.15	73.02	9.52	2.25	2.875	0.375

WA

Sizes inch

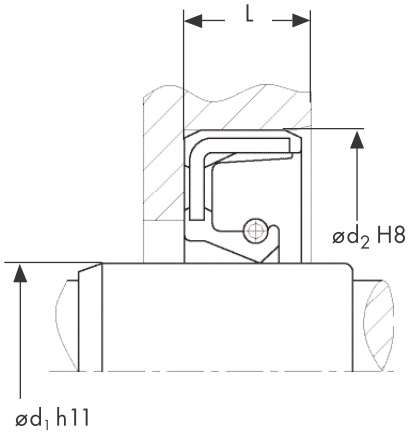

Part No.	Dimensions in mm ød1	ød2	L	Dimensions in inch ød1	ød2	L
20141	57.15	76.2	9.52	2.25	3	0.375
19965	57.15	76.2	12.7	2.25	3	0.5
59712	57.15	77.78	11.11	2.25	3.062	0.437
42640	57.15	77.88	11.91	2.25	3.066	0.469
20845	57.15	79.37	9.52	2.25	3.125	0.375
20817	57.15	80.96	12.7	2.25	3.187	0.5
20818	57.15	82.55	12.7	2.25	3.25	0.5
35716	57.15	85.72	9.52	2.25	3.375	0.375
59713	57.15	85.72	9.92	2.25	3.375	0.391
19869	57.15	85.72	12.7	2.25	3.375	0.5
20142	57.15	88.9	12.7	2.25	3.5	0.5
20820	57.15	92.07	12.7	2.25	3.625	0.5
35052	57.15	130	9.52	2.25	5.118	0.375
56983	57.94	84.93	7.93	2.281	3.344	0.312
9431	58.73	77.78	9.52	2.312	3.062	0.375
20815	58.73	79.37	9.52	2.312	3.125	0.375
59714	58.73	85.09	7.93	2.312	3.35	0.312
20248	58.73	85.32	7.93	2.312	3.359	0.312
59715	58.73	85.72	9.52	2.312	3.375	0.375
59716	59.97	129.99	9.52	2.361	5.118	0.375
20143	60.32	69.85	7.93	2.375	2.75	0.312
19962	60.32	73.02	7.93	2.375	2.875	0.312
20144	60.32	76.2	9.52	2.375	3	0.375
20145	60.32	79.37	9.52	2.375	3.125	0.375
39802	60.32	79.48	9.52	2.375	3.129	0.375
20146	60.32	82.55	12.7	2.375	3.25	0.5
20147	60.32	85.72	12.7	2.375	3.375	0.5
20148	60.32	88.9	9.52	2.375	3.5	0.375
56409	60.32	88.9	11.11	2.375	3.5	0.437
20149	60.32	88.9	12.7	2.375	3.5	0.5
20821	60.32	92.07	12.7	2.375	3.625	0.5
59717	61.91	77.78	12.7	2.437	3.062	0.5
20150	61.91	82.55	9.52	2.437	3.25	0.375
20151	61.91	85.72	12.7	2.437	3.375	0.5
36627	61.91	100.4	12.7	2.437	3.953	0.5
56729	63.5	76.2	9.52	2.5	3	0.375
20152	63.5	76.2	12.7	2.5	3	0.5
59718	63.5	77.78	10.9	2.5	3.062	0.429
80172	63.5	77.78	11.11	2.5	3.062	0.437
20153	63.5	79.37	6.35	2.5	3.125	0.25
59719	63.5	80.96	9.52	2.5	3.187	0.375
20154	63.5	82.55	9.52	2.5	3.25	0.375
20155	63.5	82.55	12.7	2.5	3.25	0.5
20156	63.5	85.72	12.7	2.5	3.375	0.5
19995	63.5	88.9	9.52	2.5	3.5	0.375
20249	63.5	88.9	12.7	2.5	3.5	0.5
41179	63.5	88.9	15.87	2.5	3.5	0.625
20157	63.5	92.07	12.7	2.5	3.625	0.5
20158	63.5	95.25	12.7	2.5	3.75	0.5
20159	63.5	98.42	6.35	2.5	3.875	0.25
20160	63.5	98.42	12.7	2.5	3.875	0.5
35522	63.5	100	9.52	2.5	3.937	0.375
20819	65.08	85.72	9.52	2.562	3.375	0.375
59720	65.08	92.07	12.7	2.562	3.625	0.5
49471	66.6	85	12.7	2.622	3.346	0.5

WA

Sizes inch

Part No.	Dimensions in mm			Dimensions in inch		
	ød$_1$	ød$_2$	L	ød$_1$	ød$_2$	L
49472	66.6	91.95	13	2.622	3.62	0.512
20161	66.67	85.72	7.93	2.625	3.375	0.312
19967	66.67	85.72	9.52	2.625	3.375	0.375
19968	66.67	88.9	12.7	2.625	3.5	0.5
20162	66.67	92.07	12.7	2.625	3.625	0.5
19970	66.67	95.25	12.7	2.625	3.75	0.5
20823	66.67	101.6	12.7	2.625	4	0.5
59721	68.26	95.25	12.7	2.687	3.75	0.5
35368	68.26	98.42	12.7	2.687	3.875	0.5
20163	68.26	101.6	12.7	2.687	4	0.5
20164	69.85	85.72	12.7	2.75	3.375	0.5
26195	69.85	86.09	7.93	2.75	3.389	0.312
133641	69.85	88.9	6.35	2.75	3.5	0.25
19969	69.85	88.9	9.52	2.75	3.5	0.375
20165	69.85	92.07	12.7	2.75	3.625	0.5
19971	69.85	95.25	12.7	2.75	3.75	0.5
20166	69.85	98.42	12.7	2.75	3.875	0.5
20167	69.85	101.6	12.7	2.75	4	0.5
20826	69.85	114.3	12.7	2.75	4.5	0.5
27563	71.43	92.07	9.52	2.812	3.625	0.375
20169	73.02	92.07	7.93	2.875	3.625	0.312
20170	73.02	92.07	9.52	2.875	3.625	0.375
20171	73.02	95.25	12.7	2.875	3.75	0.5
20822	73.02	98.42	12.7	2.875	3.875	0.5
20172	73.02	101.6	12.7	2.875	4	0.5
20173	73.02	107.95	12.7	2.875	4.25	0.5
36272	74.61	95.25	9.52	2.937	3.75	0.375
59722	76.2	95.25	7.93	3	3.75	0.312
22181	76.2	95.25	9.52	3	3.75	0.375
19972	76.2	95.25	12.7	3	3.75	0.5
22182	76.2	98.42	9.52	3	3.875	0.375
20174	76.2	101.6	9.52	3	4	0.375
19973	76.2	101.6	12.7	3	4	0.5
20175	76.2	107.95	12.7	3	4.25	0.5
20176	76.2	114.3	9.52	3	4.5	0.375
19974	76.2	114.3	12.7	3	4.5	0.5
20827	76.2	114.3	15.87	3	4.5	0.625
59723	77.78	96.04	8.98	3.062	3.781	0.354
37910	77.78	104.77	12.7	3.062	4.125	0.5
19975	79.37	101.6	12.7	3.125	4	0.5
20177	79.37	104.77	9.52	3.125	4.125	0.375
20178	79.37	104.77	12.7	3.125	4.125	0.5
20179	79.37	107.95	12.7	3.125	4.25	0.5
20180	79.37	114.3	12.7	3.125	4.5	0.5
72689	79.37	114.3	15.87	3.125	4.5	0.625
43949	79.37	120.65	12.7	3.125	4.75	0.5
37196	80.96	107.95	12.7	3.187	4.25	0.5
35239	80.96	111.12	12.7	3.187	4.375	0.5
37454	80.96	123.82	12.7	3.187	4.875	0.5
19976	82.55	101.6	12.7	3.25	4	0.5
24437	82.55	107.95	7.93	3.25	4.25	0.312
20181	82.55	107.95	12.7	3.25	4.25	0.5
20182	82.55	114.3	12.7	3.25	4.5	0.5
59724	82.55	114.3	15.87	3.25	4.5	0.625
37911	82.55	120.15	9.52	3.25	4.73	0.375

WA

Sizes inch

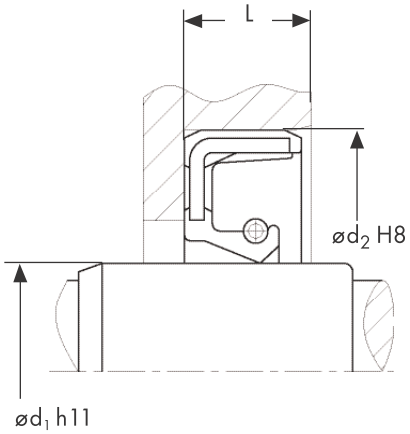

Part No.	Dimensions in mm ød1	ød2	L	Dimensions in inch ød1	ød2	L
24425	82.55	120.65	12.7	3.25	4.75	0.5
21010	84.13	111.12	12.7	3.312	4.375	0.5
35550	85.72	101.6	12.7	3.375	4	0.5
20183	85.72	107.95	12.7	3.375	4.25	0.5
22219	85.72	111.12	12.7	3.375	4.375	0.5
19977	85.72	114.3	12.7	3.375	4.5	0.5
44387	85.72	127	11.91	3.375	5	0.469
20831	85.72	127	12.7	3.375	5	0.5
20828	87.31	114.3	12.7	3.437	4.5	0.5
20824	88.9	104.77	7.93	3.5	4.125	0.312
59725	88.9	104.77	9.52	3.5	4.125	0.375
59726	88.9	107.95	12.7	3.5	4.25	0.5
21876	88.9	111.12	9.52	3.5	4.375	0.375
20825	88.9	111.12	12.7	3.5	4.375	0.5
20184	88.9	114.3	9.52	3.5	4.5	0.375
44386	88.9	114.3	11.91	3.5	4.5	0.469
19978	88.9	114.3	12.7	3.5	4.5	0.5
20829	88.9	114.3	15.87	3.5	4.5	0.625
20185	88.9	120.65	12.7	3.5	4.75	0.5
59727	88.9	123.82	12.7	3.5	4.875	0.5
20186	88.9	127	12.7	3.5	5	0.5
74387	88.9	130.17	12.7	3.5	5.125	0.5
20252	88.9	136.52	12.7	3.5	5.375	0.5
20187	92.07	114.3	12.7	3.625	4.5	0.5
35502	92.07	117.47	12.7	3.625	4.625	0.5
20188	92.07	120.65	12.7	3.625	4.75	0.5
43971	92.25	114.3	12.7	3.632	4.5	0.5
37692	95.25	111.12	8.33	3.75	4.375	0.328
20189	95.25	114.3	12.7	3.75	4.5	0.5
19979	95.25	120.65	12.7	3.75	4.75	0.5
34877	95.25	127	12.7	3.75	5	0.5
19868	95.25	133.35	12.7	3.75	5.25	0.5
56011	95.25	136.52	11.11	3.75	5.375	0.437
36956	96.83	123.82	12.7	3.812	4.875	0.5
21952	98.42	123.82	12.7	3.875	4.875	0.5
20190	98.42	127	12.7	3.875	5	0.5
20191	98.42	133.35	12.7	3.875	5.25	0.5
35524	99.85	150	12.7	3.931	5.906	0.5
35421	100.01	127	12.7	3.937	5	0.5
43950	101.35	127	12.7	3.99	5	0.5
20830	101.6	120.65	12.7	4	4.75	0.5
57183	101.6	127	7.93	4	5	0.312
20192	101.6	127	9.52	4	5	0.375
19980	101.6	127	12.7	4	5	0.5
20193	101.6	133.35	12.7	4	5.25	0.5
20883	101.6	133.35	15.87	4	5.25	0.625
20194	101.6	139.7	12.7	4	5.5	0.5
84096	101.6	146.05	12.7	4	5.75	0.5
21009	104.77	127	12.7	4.125	5	0.5
20832	104.77	130.17	12.7	4.125	5.125	0.5
21951	106.36	133.35	12.7	4.187	5.25	0.5
20195	107.95	127	12.7	4.25	5	0.5
19981	107.95	133.35	12.7	4.25	5.25	0.5
20196	107.95	136.52	12.7	4.25	5.375	0.5
20197	107.95	139.7	12.7	4.25	5.5	0.5

WA

Sizes inch

Part No.	Dimensions in mm			Dimensions in inch		
	ød$_1$	ød$_2$	L	ød$_1$	ød$_2$	L
21026	107.95	142.87	12.7	4.25	5.625	0.5
27066	107.95	146.05	11.11	4.25	5.75	0.437
20198	107.95	152.4	14.28	4.25	6	0.562
35525	110.15	170	12.7	4.337	6.693	0.5
20199	111.12	136.52	12.7	4.375	5.375	0.5
20200	111.12	139.7	12.7	4.375	5.5	0.5
20201	111.12	152.4	12.7	4.375	6	0.5
20833	114.3	133.35	11.11	4.5	5.25	0.437
20834	114.3	136.52	11.11	4.5	5.375	0.437
20202	114.3	139.7	9.52	4.5	5.5	0.375
19982	114.3	139.7	12.7	4.5	5.5	0.5
20857	114.3	142.87	12.7	4.5	5.625	0.5
20203	114.3	146.05	12.7	4.5	5.75	0.5
37197	114.3	155.57	14.28	4.5	6.125	0.562
25985	117.47	142.87	12.7	4.625	5.625	0.5
35399	117.47	146.05	14.28	4.625	5.75	0.562
20856	120.65	139.7	9.52	4.75	5.5	0.375
19983	120.65	139.7	12.7	4.75	5.5	0.5
20204	120.65	146.05	12.7	4.75	5.75	0.5
37775	120.65	152.4	12.7	4.75	6	0.5
20205	120.65	152.4	14.2	4.75	6	0.559
24217	120.65	152.4	14.28	4.75	6	0.562
38092	120.65	168.27	12.7	4.75	6.625	0.5
35400	125.41	152.4	12.7	4.937	6	0.5
59729	127	146.05	11.11	5	5.75	0.437
20206	127	146.05	12.7	5	5.75	0.5
19984	127	152.4	12.7	5	6	0.5
59730	127	152.4	14.28	5	6	0.562
20207	127	165.1	12.7	5	6.5	0.5
35053	128.58	200.02	12.7	5.062	7.875	0.5
26454	130.17	155.57	12.7	5.125	6.125	0.5
36628	133.35	158.75	12.7	5.25	6.25	0.5
144070	133.35	158.75	14.28	5.25	6.25	0.562
20208	133.35	165.1	14.28	5.25	6.5	0.562
38215	133.35	171.45	15.87	5.25	6.75	0.625
118496	134.54	155.58	9.52	5.297	6.125	0.375
27003	136.52	161.92	12.7	5.375	6.375	0.5
20209	136.52	165.1	12.7	5.375	6.5	0.5
26564	138.12	165.1	12.7	5.438	6.5	0.5
20210	139.7	158.75	12.7	5.5	6.25	0.5
20214	139.7	165.1	12.7	5.5	6.5	0.5
59731	139.7	171.45	12.7	5.5	6.75	0.5
38784	139.7	215.9	15.87	5.5	8.5	0.625
20211	142.87	165.1	12.7	5.625	6.5	0.5
20858	142.87	168.27	12.7	5.625	6.625	0.5
34761	142.87	171.45	14.28	5.625	6.75	0.562
59732	142.87	177.8	12.7	5.625	7	0.5
19987	146.05	171.45	12.7	5.75	6.75	0.5
24426	146.05	177.8	12.7	5.75	7	0.5
26483	147.64	174.63	12.7	5.813	6.875	0.5
56023	149.22	171.45	15.87	5.875	6.75	0.625
37626	149.22	177.8	12.7	5.875	7	0.5
27291	150.81	177.8	12.7	5.937	7	0.5
20212	152.4	177.8	12.7	6	7	0.5
43970	152.4	184.15	15.87	6	7.25	0.625

WA

Sizes inch

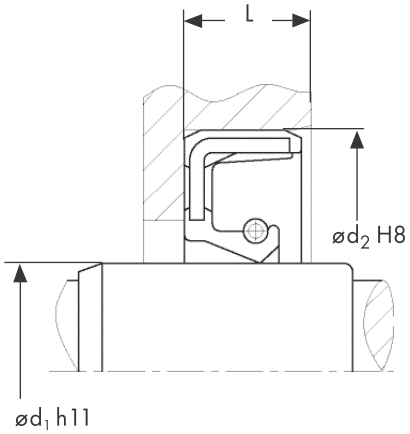

Part No.	Dimensions in mm ød1	ød2	L	Dimensions in inch ød1	ød2	L
24218	152.4	190.5	19.05	6	7.5	0.75
59733	152.4	190.5	24.13	6	7.5	0.95
21024	155.58	180.98	12.7	6.125	7.125	0.5
35848	155.58	193.68	15.87	6.125	7.625	0.625
35606	157.16	184.15	12.7	6.187	7.25	0.5
38209	158.75	182.44	15.87	6.25	7.183	0.625
38214	158.75	182.56	15.87	6.25	7.187	0.625
21525	158.75	184.15	12.7	6.25	7.25	0.5
27575	161.92	187.32	12.7	6.375	7.375	0.5
35849	161.92	187.32	19.05	6.375	7.375	0.75
35054	161.92	190.5	12.7	6.375	7.5	0.5
20213	165.1	190.5	12.7	6.5	7.5	0.5
20859	165.1	196.85	12.7	6.5	7.75	0.5
38210	168.28	190.5	14.28	6.625	7.5	0.562
25984	168.28	193.67	12.7	6.625	7.625	0.5
36629	169.86	196.85	12.7	6.687	7.75	0.5
20216	171.45	196.85	12.7	6.75	7.75	0.5
25982	176.21	203.2	12.7	6.937	8	0.5
20215	177.8	203.2	12.7	7	8	0.5
39241	177.8	215.9	12.7	7	8.5	0.5
25981	184.15	222.25	14.28	7.25	8.75	0.562
83431	184.15	222.25	14.5	7.25	8.75	0.571
27041	190.5	228.6	14.28	7.5	9	0.562
26100	193.68	231.77	14.28	7.625	9.125	0.562
25983	203.2	241.3	14.28	8	9.5	0.562
25980	209.55	247.65	14.28	8.25	9.75	0.562
27440	215.9	254	14.28	8.5	10	0.562
78494	215.9	254	19.05	8.5	10	0.75
59734	228.6	254	11.11	9	10	0.437
37594	228.6	266.7	14.28	9	10.5	0.562
37593	254	292.1	14.28	10	11.5	0.562
59735	266.7	317.5	25.4	10.5	12.5	1
44120	285.75	336.55	23.81	11.25	13.25	0.937
59466	355.6	396.87	19.05	14	15.625	0.75
57291	365.12	412.75	17.46	14.375	16.25	0.687
35789	406.4	457.2	20.63	16	18	0.812
36521	546	596.9	19.05	21.5	23.5	0.75

WAS

Sizes metric

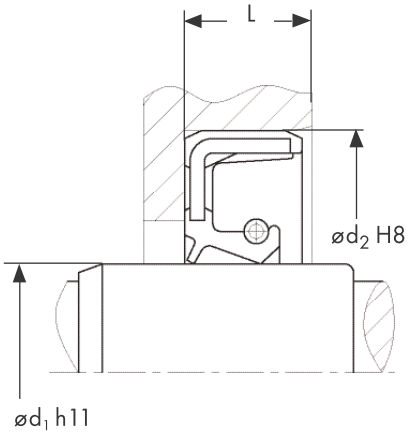

Part No.	Dimensions in mm ød1	ød2	L	Part No.	Dimensions in mm ød1	ød2	L
38166	5	15	5	26216	11	30	7
38836	5	15	6	19772	11.6	24	10
38837	5	16	7	57032	12	18	4.5
38838	5	18	7	57033	12	18	5
27672	5	19	5	57034	12	19	5
38839	5	22	7	38852	12	20	4
57030	6	16	5	122334	12	20	5
38840	6	16	7	57036	12	22	5
38841	6	19	7	16790	12	22	6
41281	6	20	6	37434	12	22	6.5
27673	6	22	7	18579	12	22	7
27674	6	22	8	16793	12	22	7.5
19596	6.5	14.5	7	39287	12	22	8
19597	6.8	22	7	18580	12	22	9
35612	7	16	7	18581	12	23	8
83458	7	18	8	18582	12	24	6
39260	7	22	10	16797	12	24	7
38842	8	16	6	74715	12	24	8
66795	8	16	7	18586	12	25	4.5
27675	8	18	5	56177	12	25	5
57026	8	18	7	18589	12	25	7
38843	8	19	7	38853	12	25	8
18592	8	20	5	38854	12	26	7
38844	8	20	7	38855	12	26	8
18593	8	21	6	38856	12	28	7
19684	8	22	6	18591	12	28	8
18594	8	22	7	18548	12	30	7
18596	8	25	8	18550	12	30	9
83459	9	18	8	18551	12	32	7
27676	9	19	5	39290	12	34	7
57028	9	20	7	18554	12	42	8
39269	9	21	9.5	57038	12.5	23.5	10
38845	9	22	7	131026	12.5	25	8
38846	9	24	7	124592	13	22	5
73081	9.5	16	4	39295	13	25	5
131002	10	18	4	18557	13	25	7
39253	10	18	6	18559	13	26	7
38847	10	19	7	38857	13	26	9
18606	10	20	5	16810	13	28	7
39178	10	20	6	18561	13	30	10
18607	10	20	7	19598	13.5	26	8
38848	10	22	4	124817	13.5	35.5	10
18609	10	22	5	38858	14	22	4
38849	10	22	6	75421	14	22	4.5
37145	10	22	7	83461	14	22	5
39188	10	24	7	61095	14	22	7
39274	10	25	4.5	39323	14	24	4
18610	10	25	7	43679	14	24	5
38850	10	26	7	38466	14	24	7
70293	10	28	7	18526	14	24	8
57031	11	17	4	36581	14	25	7
18613	11	21	8	39326	14	26	6
18614	11	22	7	36820	14	26	7
115789	11	25	7	39328	14	27	7
38851	11	30	5	18531	14	28	7

WAS

Sizes metric

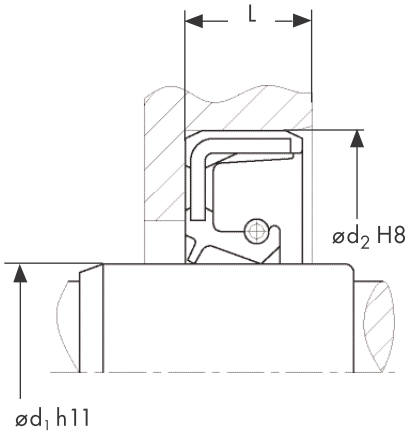

Part No.	Dimensions in mm ød1	ød2	L	Part No.	Dimensions in mm ød1	ød2	L
18533	14	28	8	18617	16	26	7
38859	14	30	7	18619	16	26	8
18534	14	30	8	39345	16	26.7	7
38860	14	30	10	16854	16	28	7
38861	14	30	13	39348	16	28	8
38862	14	32	7	57049	16	28.65	7
38634	14	35	7	39346	16	28.7	8
38863	14	36	7	143998	16	30	4.5
19600	14.5	30	8	38978	16	30	6
38865	14.7	30	7	18622	16	30	7
38869	15	22	5	38979	16	30	8
117756	15	24	5	38980	16	32	7
18538	15	24	7	39829	16	34	10
44981	15	25	5	38981	16	35	7
18541	15	25	6	36813	16	35	9
18542	15	25	7	149270	16	35	10
150141	15	25.4	5	155134	16	40	7
39340	15	25.4	8	38983	16	40	10
130122	15	25.5	7	39344	16	42	7
18545	15	26	6	39834	16	48	7
16831	15	26	7	38985	16.5	28	8
18502	15	27	7	39836	17	23	3
38870	15	28	6	130949	17	27	5
38871	15	28	7	38987	17	27	8
18505	15	30	5	18629	17	27	10
16834	15	30	7	18631	17	28	6
38872	15	30	8	16872	17	28	7
38873	15	30	10	19486	17	28	8
18508	15	30	12	38988	17	28.5	7
38874	15	32	5	38989	17	28.65	7
16841	15	32	7	57051	17	29	5
38876	15	32	8	18633	17	29	7
18509	15	32	9	83462	17	30	5
45323	15	33	10	18636	17	30	6
56930	15	35	6	16875	17	30	7
18512	15	35	7	18637	17	30	8
18513	15	35	8	39837	17	30	10
38878	15	35	10	39839	17	30.5	7
38879	15	35.2	5.5	38990	17	31	7
39339	15	36	7	144000	17	32	5
38880	15	37	6	39840	17	32	6
38881	15	37	7	16880	17	32	7
38883	15	40	8	38991	17	32	7.5
38884	15	40	10	18708	17	32	8
38885	15	42	7	39838	17	33	8
18515	15	42	8	38993	17	34	7
18516	15	42	10	16887	17	35	7
18517	15	48	8	16889	17	35	8
19602	15.6	30	7	18716	17	35	9
56790	16	22	4	143999	17	35	10
88176	16	22	7	18717	17	37	5
152309	16	24	4	38994	17	37	7
18521	16	24	6.5	18720	17	38	7
126759	16	24	7	35354	17	39	9.5
130948	16	26	6	16897	17	40	7

WAS

Sizes metric

Part No.	Dimensions in mm ød$_1$	ød$_2$	L	Part No.	Dimensions in mm ød$_1$	ød$_2$	L
18722	17	40	8	18762	20	30	6
18724	17	47	8	16930	20	30	7
18726	17	47	10	39878	20	30	8
38997	17.4	30	7	38635	20	31	7
18495	18	28	6	39879	20	32	5
18730	18	28	7	39099	20	32	6
18732	18	28	8	39897	20	32	6.5
18733	18	29	7	16933	20	32	7
20235	18	30	6	39100	20	32	7.5
18734	18	30	7	18766	20	32	8
18735	18	30	8	40506	20	32	12
18736	18	31	7	40507	20	32.5	12
16907	18	32	6	18771	20	34	7
18738	18	32	7	39101	20	34	8
35856	18	32	8	40508	20	35	5
39848	18	32	10	39102	20	35	5.5
126973	18	34	7	18775	20	35	6
20224	18	35	6	16938	20	35	7
16911	18	35	7	18777	20	35	8
16913	18	35	8	18779	20	35	10
89307	18	35	10	39103	20	35	12
18743	18	37	8	39104	20	35	13
18745	18	38	7	18782	20	36	7
18746	18	38	10	39105	20	37	7
39002	18	40	7	18783	20	37	8
39003	18	40	10	18785	20	37	10
39068	18	42	7	41282	20	38	3
38041	19	27	5	18787	20	38	5
39860	19	30	6.5	16945	20	38	7
39070	19	30	7	18790	20	38	8
39861	19	30	8	18791	20	38	10
39859	19	30	9	40512	20	38.5	8
55977	19	31	8	34920	20	40	6
64549	19	32	5	16950	20	40	7
39072	19	32	7	17149	20	40	8
18751	19	32	8	18794	20	40	9
39864	19	32.5	8	18795	20	40	10
39090	19	33.3	8	39108	20	40	11
39091	19	35	7	39109	20	41.2	5
18753	19	35	8	83464	20	42	6
18755	19	38	7	18796	20	42	7
39867	19	38	10	18797	20	42	8
39190	19	40	10	39111	20	42	10
39092	19	47	7	40516	20	42	12
39093	19	47	8	39112	20	45	7
39094	19	47	10	18798	20	45	8
39869	19	47	10.5	18800	20	46	8
39856	19.5	27	6	39114	20	47	5
19606	19.8	52	8	16966	20	47	7
39095	20	26	5	18801	20	47	8
39096	20	28	4	18804	20	47	9
130999	20	28	6	18805	20	47	10
39097	20	28	7	18806	20	47	12
74062	20	30	4.5	39115	20	52	7
39098	20	30	5	18809	20	52	8

WAS

Sizes metric

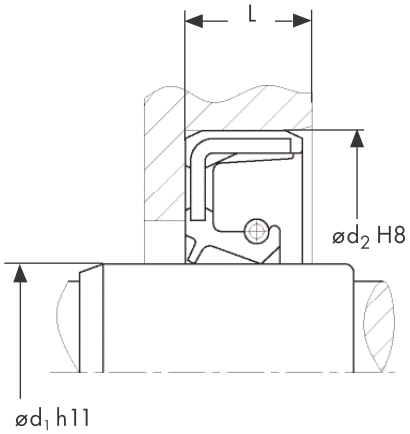

Part No.	Dimensions in mm ød1	ød2	L	Part No.	Dimensions in mm ød1	ød2	L
18810	20	52	9	18852	23	35	7
95601	20	52	10	39142	23	38	7
39116	20	54	7	18853	23	40	6
39117	20	62	10	39144	23	40	7
40522	21	31	5	39145	23	40	8
40519	21	32	8	39180	23	40	10
18816	21	35	7	125106	23	42	6
18817	21	35	13	133547	23	42	8
18819	21	40	7	39191	23	42	10
19607	21.6	35	8	39146	23	42	11
39118	22	30	7	40536	23	45	11
39119	22	30	8	18855	23	47	7
126054	22	32	4.5	61834	23	47	10
18825	22	32	7	18856	23	48	10
34931	22	32	8	40537	23	52	11
18826	22	33	6.5	39147	23	55	7
124264	22	34	5	150338	24	35	5
130996	22	34	7	39148	24	35	6
18827	22	35	5	38637	24	35	7
18829	22	35	6	18859	24	35	8
16984	22	35	7	18862	24	36	7
18831	22	35	8	131092	24	37	5
16988	22	35	10	39149	24	37	7
39125	22	36	8	39150	24	38	7
39126	22	36	10	18865	24	38	8
40529	22	36.5	7	39151	24	38	8.5
18837	22	37	7	39152	24	38	10
35897	22	37	8.5	17018	24	40	7
18838	22	38	6	39153	24	40	8
39128	22	38	7	39154	24	40	10
18840	22	38	8	40541	24	41	10
131078	22	39	6	39156	24	42	7
40530	22	40	5	39157	24	42	8
16993	22	40	7	39158	24	42	10
18843	22	40	8	148857	24	43	6
35082	22	40	10	39159	24	45	7
18844	22	40	11	40543	24	45	8
39129	22	40	16	39160	24	46	10
39130	22	41.25	6	17025	24	47	7
18845	22	42	7	39161	24	47	8
39131	22	42	8	24203	24	47	10
39132	22	42	10	40544	24	49	12
18848	22	42	11	40545	24	50	10
40532	22	42	12	18870	24	51	7
39133	22	45	7	18871	24	52	7
39134	22	45	8	40546	24	52	10
40533	22	45	11	40547	24	52	11
38636	22	47	7	40548	24	54	14
39136	22	47	10	17028	25	32	6
39138	22	48	7	46411	25	32	7
39139	22	48	11	18877	25	35	5
19802	22	52	10	18879	25	35	6
40534	22	62	12	17031	25	35	7
39140	23	32	5	18881	25	35	8
18851	23	35	6	40606	25	36	6

WAS

Sizes metric

Part No.	Dimensions in mm ød$_1$	ød$_2$	L	Part No.	Dimensions in mm ød$_1$	ød$_2$	L
39165	25	36	7	18920	25	50	10
18885	25	36	8	17084	25	52	7
18886	25	36	9	18923	25	52	8
40608	25	37	5.5	18924	25	52	10
18888	25	37	6	18925	25	52	12
35080	25	37	7	18926	25	52	15
18891	25	37	8	18927	25	55	9
39166	25	38	5	18928	25	55	10
39167	25	38	6	39384	25	55	11
26155	25	38	7	132965	25	58	10
18892	25	38	8	39386	25	62	7
39169	25	38	10	18930	25	62	8
39179	25	39	7	38121	25	62	10
39371	25	39.5	10	39387	25	65	12
18895	25	40	5	39388	25	65	14
18897	25	40	6	74587	25	70	12
17045	25	40	7	80748	26	35	6
18899	25	40	8	18932	26	36	7
39373	25	40	9	62894	26	36	10
18901	25	40	10	35470	26	37	7
18903	25	41	6	62893	26	37	10
18904	25	41	7	18936	26	38	5
40682	25	41	8	18938	26	38	7
39374	25	41.2	8	18939	26	38	8
130998	25	41.2	10	18940	26	40	5
39375	25	41.25	6	39390	26	40	6
40683	25	41.5	6.5	39391	26	40	7
39377	25	41.55	10	39393	26	40	9
40684	25	42	6	39394	26	42	7
39378	25	42	7	18946	26	42	8
17058	25	42	8	18947	26	42	10
18909	25	42	10	18948	26	43	8
40685	25	43	8	18949	26	45	6
144048	25	43	9	18951	26	45	9
39379	25	43	10	39396	26	46	8
18912	25	44	7	18954	26	47	7
40686	25	44.5	6	18955	26	47	9
40688	25	44.5	9	39397	26	47	10
39380	25	45	7	39398	26	48	7
17062	25	45	8	18957	26	52	7
18900	25	45	9	39192	26	52	7.8
17064	25	45	10	18958	26	52	8
18914	25	45	11	18959	26	52	9
40690	25	45	18	38467	26	52	10
17067	25	46	7	39399	26	62	9
40607	25	46	15	75132	26	72	10
18916	25	47	6	39400	27	36	6
17069	25	47	7	69420	27	37	7
17072	25	47	8	40701	27	38	7
17075	25	47	10	39401	27	40	6
39381	25	48	7	39402	27	40	7
18918	25	48	8	18961	27	40	8
18919	25	48	10	40704	27	41.5	9
39382	25	48.5	7	17119	27	42	10
39383	25	50	8	39403	27	43	8

WAS

Sizes metric

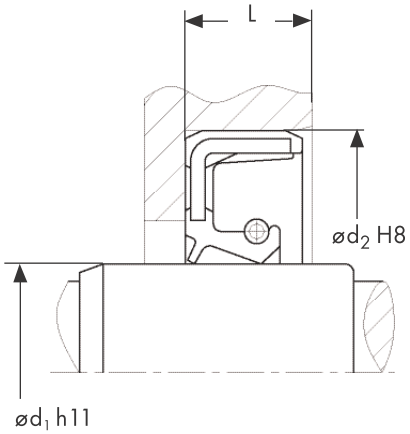

Part No.	Dimensions in mm ød1	ød2	L	Part No.	Dimensions in mm ød1	ød2	L
18963	27	43	9	18956	29	45	9
18965	27	45	8	81359	29	45	12
39405	27	45	9	156450	29	52	7
126131	27	47	7	127703	30	38	7
39406	27	47	8	18996	30	40	5
18966	27	47	11	17164	30	40	7
60218	27	50	10	69329	30	40	8
83465	27	51	10	38918	30	41	7
35718	27	55	8	38919	30	42	5
18968	27	75	12	26542	30	42	6
38886	28	35	5	38920	30	42	6.5
38887	28	35	7	34849	30	42	7
38888	28	37	5	38921	30	42	7.9
38891	28	37	6	19001	30	42	8
17129	28	38	7	19002	30	42	10
18971	28	38	8	40723	30	42	12
38892	28	38	10	38922	30	43	8
38893	28	40	5	19004	30	43	8.5
37886	28	40	7	38923	30	43	10
18973	28	40	8	19005	30	44	7
38894	28	40	10	19006	30	44	9
40708	28	41.2	8	37435	30	45	5
40709	28	41.5	9	38925	30	45	7
40710	28	42	6	17174	30	45	8
18975	28	42	7	40724	30	45	9
18976	28	42	8	38926	30	45	10
38895	28	42	11	19009	30	45	11
38896	28	42.5	8	19011	30	46	5
38899	28	43	8	19012	30	46	7
38900	28	43	10	38927	30	46	8
18977	28	44	7	40725	30	47	5
38901	28	45	5	38928	30	47	6
38903	28	45	6	17181	30	47	7
38904	28	45	7	18701	30	47	8
38203	28	45	8	19016	30	47	10
17143	28	45	10	38929	30	48	7
40711	28	45.2	8	19017	30	48	8
17146	28	47	7	38930	30	48	10
18981	28	47	8	38931	30	49	7
38906	28	47	10	19018	30	50	7
18982	28	48	8	38932	30	50	8
18984	28	48	11	38933	30	50	10
38907	28	50	6	19020	30	50	11
38908	28	50	10	40727	30	50	15
40714	28	50	11	40728	30	51	8
57058	28	50.8	10	152673	30	52	5
18987	28	52	6	19022	30	52	7
18989	28	52	7	19023	30	52	8
38911	28	52	10	19024	30	52	10
149309	28	55	8	19025	30	52	11
134458	28	62	10	19026	30	52	12
38912	28.6	40	8	38935	30	53.5	10.13
19705	29	40	7	135222	30	54	8
65444	29	40	8	144052	30	54	9
38914	29	45	8	40730	30	54	12

WAS

Sizes metric

Part No.	Dimensions in mm ød$_1$	ød$_2$	L	Part No.	Dimensions in mm ød$_1$	ød$_2$	L
38936	30	55	6	40749	32	44.5	9
38938	30	55	7	40751	32	44.5	12
38939	30	55	8	40753	32	45	5
19028	30	55	10	19044	32	45	7
38940	30	55	11	79447	32	45	7.7
19029	30	55	12	39407	32	45	8
40731	30	56	6	19046	32	45	10
38942	30	56	8	40752	32	45	12
38943	30	56	10	39408	32	46	7
40729	30	58.3	9	19047	32	46	8
149789	30	60	8	37249	32	47	7
74030	30	60	10	130997	32	47	8
40732	30	60	12	40755	32	47	9
17244	30	62	7	39409	32	47	10
19031	30	62	8	35195	32	47	12
40734	30	62	9	39411	32	48	7
38945	30	62	10	19049	32	48	8
19032	30	62	11.5	39414	32	48	10
34801	30	62	12	19050	32	48	11
38959	30	65	10	39415	32	50	8
38960	30	66	12	35194	32	50	10
38962	30	70	10	40756	32	51	8
19034	30	72	8	40763	32	51	9.5
37163	30	72	10	40759	32	51	12
57064	30	75	9	18702	32	52	7
19035	30	75	10	19051	32	52	8
19036	30	77	9	39187	32	52	10
19037	30	77	10	19053	32	52	11
42561	30	80	10	19054	32	54	10
38963	30.5	47	8	39418	32	55	8
19039	31	43	8	39194	32	55	10
40735	31	44	7	39419	32	55	11
40740	31	44.5	9.5	17306	32	56	10
107173	31	45	9	39420	32	56	11
19040	31	46	6	19055	32	57	7.5
38964	31	47	8	40760	32	58	10
38965	31	48	7	40761	32	60	10
38966	31	48	10	40762	32	62	7
38967	31	49	7	19058	32	62	10
38968	31	51	7	19059	32	65	6.5
39186	31	52	6	39422	32	65	9
40741	31.5	55	11	39423	32	65	12
118829	32	40	7	17318	32	65	13
57065	32	41.25	7	19060	32	72	8
38971	32	42	6	19061	32	72	10
38972	32	42	7	39424	32	72	12
38973	32	42	8	19062	32	78	9.5
40745	32	42.7	9	19063	32	78	10
38974	32	43	5.5	19064	33	44	8
38975	32	43	7	39426	33	44	8.9
38976	32	44	7	6310	33	45	10
20218	32	44	8	19066	33	48	8.9
38977	32	44	9	17321	33	50	6
40747	32	44	10	19068	33	50	7
40748	32	44	12	39427	33	50	10

WAS

Sizes metric

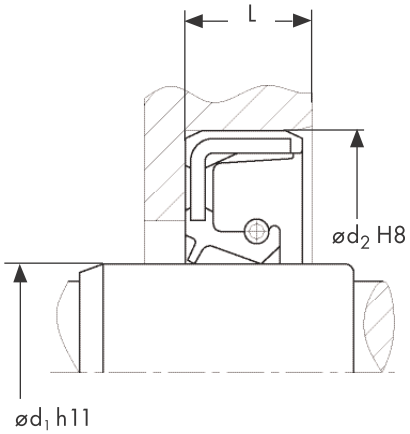

Part No.	Dimensions in mm ød1	ød2	L	Part No.	Dimensions in mm ød1	ød2	L
19069	33	50	11	19096	35	52	8
39183	33	50	12	19098	35	52	9
40767	33	52	8	17379	35	52	10
133187	33	54	10.7	19099	35	52	11
40768	33	59	12	39445	35	52	12
35960	34	45	7	40797	35	52.5	12
19073	34	45	9	40793	35	52.5	12.8
19074	34	45	11	39446	35	54	8
39429	34	46	8	40798	35	54	9.5
19075	34	47	7	39447	35	54	10
19077	34	48	7	19102	35	55	8
19078	34	48	8	19103	35	55	9
40771	34	48	11	17388	35	55	10
19079	34	50	7	19104	35	55	11
39432	34	50	11	39449	35	55	12
39433	34	50	12	39450	35	56	9
39193	34	52	7	35814	35	56	10
78830	34	52	10	17399	35	56	12
19083	34	52	11	40800	35	57	8
39434	34	54	7.5	39451	35	58	7
40772	34	54	10	39452	35	58	8
19084	34	54	11	39453	35	58	10
26164	34	54	12.5	19107	35	58	12
39435	34	55	9	39454	35	60	10
40773	34	62.5	8	19108	35	60	12
19086	34	72	10	127883	35	60	15
17344	34	72	14.5	39455	35	62	6
80137	34.5	47	7	34807	35	62	7
19087	35	42	8	17418	35	62	8
17346	35	45	7	17422	35	62	10
19088	35	45	8	17426	35	62	12
40779	35	45	12	39457	35	63.5	9
39436	35	46	7	39459	35	64	9
132578	35	46	8	39460	35	64	12
126514	35	47	6	39461	35	64	13
17351	35	47	7	18703	35	65	10
39711	35	47	8	17003	35	65	12
19090	35	47	9	39462	35	68	10
19091	35	47	10	40807	35	68	12
39438	35	48	7	39463	35	70	10
19092	35	48	8	73078	35	72	7
39439	35	48	9	39465	35	72	8
39440	35	48	10	39466	35	72	9.8
40784	35	48	12	19111	35	72	10
39441	35	48	15	17449	35	72	12
37302	35	50	7	39467	35	76	9
19093	35	50	8	39468	35	78	8
19094	35	50	10	44561	35	80	8
39442	35	50	11	27597	35	80	10
39443	35	50	12	34804	35	80	12
40795	35	51	9	34802	35	80	13
19095	35	51	12	40796	35.4	51	12
40785	35	51	14	39469	35.5	44	9
56981	35	52	6	39471	36	47	7
17370	35	52	7	39477	36	48	10

WAS

Sizes metric

Part No.	Dimensions in mm ød$_1$	ød$_2$	L	Part No.	Dimensions in mm ød$_1$	ød$_2$	L
39478	36	50	6	17489	38	55	10
19112	36	50	7	40821	38	56	9
40810	36	50	8	39513	38	56	10
40809	36	50	9	40822	38	57	7
40811	36	51	8	19125	38	58	7
40812	36	52	7	39516	38	58	8
17460	36	52	9	39517	38	58	10
39480	36	52	10	19127	38	58	11
39481	36	53	9	40824	38	58.3	9
39482	36	54	7	39518	38	59	8
39483	36	54	7.5	39520	38	60	8
39484	36	54	10	39521	38	60	10
39485	36	54	11	39522	38	60.5	12
150262	36	56	7	38469	38	62	7
39487	36	56	9	39523	38	62	8
18704	36	58	10	24700	38	62	8.5
38638	36	58	12	39524	38	62	9
149995	36	58	15	39525	38	62	10
39488	36	59.3	9	39526	38	62	11
39491	36	60	10	40826	38	62	12
19114	36	62	7	39527	38	63	9
39492	36	63.4	12.5	39529	38	65	10
39493	36	63.5	12	39530	38	68	10
39494	36	68	10	39531	38	72	8
77851	37	48	6	39532	38	72	10
39495	37	50	7	127609	38	74	10
39497	37	52	10	39534	38	74	11
117910	37	52	12	40827	38	75	10
40815	37	53	7	39538	38.5	58	9
19115	37	55	8	39539	38.5	58	11
116824	37	60	10	19806	39	52	10
39498	37	62	7	40830	39	58.8	4.8
143789	37	72	7	40829	39	60	8
39499	38	47	10	39541	39	64	9
77850	38	48	6	39542	39.5	62	12
39501	38	48	10	39544	39.7	62	11.5
39184	38	50	7	39545	40	50	5
19117	38	50	8	19133	40	50	6.5
19118	38	50	10	19135	40	50	7
39502	38	50	11	19136	40	50	8
40817	38	50	12	40833	40	51	6
39503	38	51	7.54	40835	40	51	10
39504	38	52	6	19137	40	52	5
39505	38	52	7	39546	40	52	6
39506	38	52	8	17515	40	52	7
39507	38	52	8.5	19140	40	52	8
19119	38	52	9	17517	40	52	9
19120	38	52	9.5	39548	40	52	10
39509	38	52	10	150264	40	53	7
150263	38	53	7	39549	40	54	5.5
40819	38	53	10	39550	40	54	7
39511	38	54	10	39551	40	54	7.5
39512	38	55	7	17521	40	55	7
19122	38	55	8	17524	40	55	8
19123	38	55	9	75069	40	55	9

WAS

Sizes metric

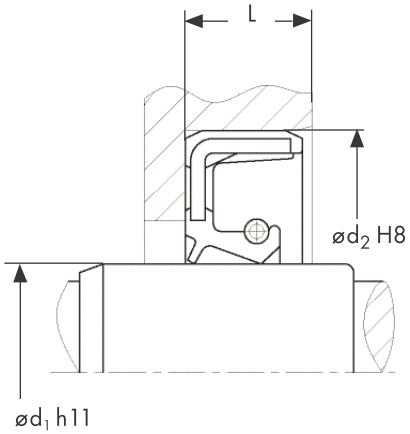

Part No.	Dimensions in mm ød1	ød2	L	Part No.	Dimensions in mm ød1	ød2	L
19144	40	55	10	122333	40	85	10
39553	40	55	12	127628	40	90	8
19145	40	56	7	39591	40	90	9
39555	40	56	8	39592	40	90	10
39556	40	56	10	39594	40	90	12
039557	40	57	10	122036	40	110	10
39558	40	57.2	10	39595	41	52	7
19149	40	58	8	19173	41	53	7
90328	40	58	8.5	39596	41	53	8
24416	40	58	8.9	39597	41	55	7
39559	40	58	9	39598	41	55	9
18705	40	58	10	39599	41	56	7
17544	40	59	9.5	19177	41	56	8
39560	40	60	7	19179	41	56	10
37770	40	60	8	39600	41.7	55	8
39561	40	60	9	19180	42	52	4
19154	40	60	10	19181	42	52	8
19155	40	60	12	39602	42	53	7
39562	40	62	7	39603	42	54	5
19157	40	62	8	39604	42	55	5
19158	40	62	9	39605	42	55	6
17554	40	62	10	19182	42	55	7
19159	40	62	11	19183	42	55	8
19160	40	62	11.5	19184	42	55	9
19161	40	62	12	19186	42	55	10
40841	40	62	14	40851	42	55	12
19156	40	63	7	34869	42	56	7
39563	40	64	10	19190	42	56	10
81239	40	64	12	40852	42	57	14
39564	40	65	8	19194	42	58	7
39565	40	65	9	19196	42	58	8
17564	40	65	10	39607	42	58	10
19162	40	65	12	19197	42	60	7
19163	40	65	13	39608	42	60	8
19164	40	65	14	19200	42	60	9
19165	40	67	8	19202	42	60	10
39566	40	68	7	17618	42	62	7
39255	40	68	10	38639	42	62	8
39568	40	68	11	39609	42	62	9
39569	40	68	12	19204	42	62	10
40839	40	69	9	39610	42	62	11
19167	40	70	8	39611	42	65	8
35081	40	70	10	39612	42	65	9
39570	40	72	7	39182	42	65	10
40843	40	72	8	19207	42	65	12
19168	40	72	10	77726	42	65	13
39571	40	72	12	60213	42	67	10
40844	40	72.5	11.5	17633	42	68	10
39588	40	75	10	40856	42	68	12
39589	40	75	12	150265	42	70	8
40845	40	80	7	19209	42	70	10
39590	40	80	8	39614	42	70	12
26199	40	80	10	48536	42	72	6
17594	40	80	12	39615	42	72	8
34803	40	80	13	81936	42	72	9

WAS

Sizes metric

Part No.	Dimensions in mm ød$_1$	ød$_2$	L	Part No.	Dimensions in mm ød$_1$	ød$_2$	L
19211	42	72	10	19240	45	60	9
39617	42	72.5	12	17663	45	60	10
39618	42	75	10	40876	45	60	12
69295	42	75	12	19241	45	61	9
19212	42	76	12	17669	45	62	7
39619	43	54	7	19243	45	62	8
39620	43	54	7.5	39642	45	62	8.5
7179	43	54	9	19245	45	62	9
39621	43	55	8	17672	45	62	10
5941	43	55	9	39644	45	62	11
19215	43	58	7	19246	45	62	12
40859	43	59	8	39645	45	63.5	10
39622	43	62	8	40879	45	64	8
19216	43	62	12	39646	45	65	5
39623	43	66	10	25652	45	65	8
40860	43	68	12	17682	45	65	10
40861	43	70	10	39648	45	65	12
39624	43	73	10	39650	45	68	8
40862	43.5	68	12	19248	45	68	9
39625	44	54	4.5	39651	45	68	10
39626	44	54	7	19250	45	68	12
40863	44	58	9	40882	45	68	14
40864	44	58.3	9	39653	45	70	5
39627	44	60	7	39654	45	70	10
19219	44	60	9	19251	45	70	12
39628	44	60	10	40884	45	71	6.5
19221	44	60	12	17700	45	72	8
19222	44	61	8	37224	45	72	10
40866	44	61	10	19252	45	72	12
19223	44	62	8	39655	45	72	13
19224	44	62	9	81252	45	74	12
17652	44	62	10	19863	45	74.5	12
19227	44	62	11.5	39656	45	75	6
81249	44	64	9	39657	45	75	7
39630	44	65	8	19253	45	75	8
38640	44	65	11	19254	45	75	10
40871	44	69	11	19255	45	75	12
40873	44	70	12	40885	45	75	15
19690	44.5	62	10	39658	45	78	8
39632	44.5	70	10	39659	45	78	12
39633	45	54	4.5	34805	45	80	10
75031	45	55	7	39660	45	80	12
39637	45	56	7	19258	45	80	13
133548	45	56	10	39661	45	85	8
19234	45	57	5.5	34806	45	85	10
40875	45	57	7	17725	45	90	10
19236	45	57	7.5	75070	45	100	8
46806	45	57	10	39662	45	100	10
38641	45	58	7	82202	45	120	12
39639	45	58	12	39663	46	59	12
39643	45	59	10	68010	46	60	7
39640	45	59.13	10	65443	46	60	8
40877	45	60	5	19260	46	62	8
17659	45	60	7	39664	46	64	8
18661	45	60	8	25650	46	64	9

WAS

Sizes metric

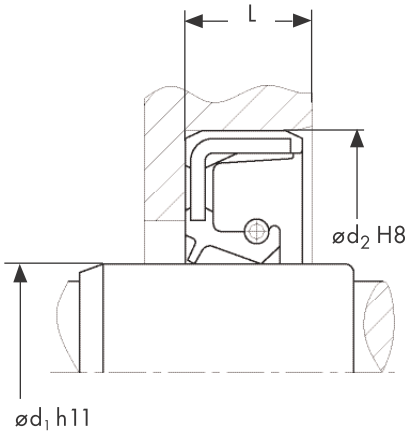

Part No.	Dimensions in mm ød1	ød2	L	Part No.	Dimensions in mm ød1	ød2	L
83446	46	64	14	39691	48	80	8
19261	46	65	7	39690	48	80	10
19262	46	65	9	39692	48	80	12
134151	46	68	8	81255	48	82	12
46196	46	68	12	26200	48	90	13
118934	46	70	8	19291	49	68	9
40887	46	70	10	40933	49	72	10
39665	46	70	14	150266	49	92	10
40888	46	73	10	39693	49.5	70	10
39666	47	58	7	39694	49.5	77	18
40890	47	64	8	40937	50	60	7.5
83447	47	67	10	127324	50	60	8
40893	47	70	8	39197	50	62	7
19266	47	70	10	39695	50	62	8
39669	47	70	11	39697	50	64	8
39670	47	70	12	19295	50	64	10
39671	47	76.5	9	19296	50	65	6
39672	47	80	12	17765	50	65	8
39674	48	60	7	19297	50	65	9
39675	48	60	9	39698	50	65	10
39676	48	60	10	40938	50	67	7
39677	48	62	6	39699	50	67	9
19268	48	62	7	39700	50	67	11
18664	48	62	8	156158	50	68	7
39678	48	62	9	37207	50	68	8
19270	48	62	10	19299	50	68	9
39064	48	62	11	37908	50	68	10
19271	48	62	12	19302	50	70	6
39679	48	65	7	39701	50	70	8
40870	48	65	8	39703	50	70	9
19272	48	65	9	39704	50	70	9.5
19273	48	65	10	19304	50	70	10
39680	48	65	12	39705	50	70	11
40894	48	65	15	19305	50	70	12
19276	48	66	12	39706	50	70	13.5
83448	48	67	10	40939	50	70	14
81237	48	68	8	39707	50	72	7
19279	48	68	10	27538	50	72	8
39681	48	68	11	19307	50	72	9
39682	48	68	12	19308	50	72	10
17741	48	68	14	19309	50	72	12
39683	48	69	10	40942	50	73	8
39684	48	70	9	40943	50	73	10
39685	48	70	10	40946	50	75	6
19281	48	70	11	38759	50	75	10
19283	48	70	12	19310	50	75	12
17745	48	72	7	39710	50	76	12
18662	48	72	8	40947	50	78	12
19287	48	72	10	19312	50	80	8
19288	48	72	12	19313	50	80	10
19289	48	72.5	10	19315	50	80	12
39686	48	74	10	26201	50	80	13
39687	48	75	12	19318	50	82	12
152976	48	76	11	39712	50	85	8
39689	48	79	9	39714	50	85	10

WAS

Sizes metric

Part No.	Dimensions in mm ød$_1$	ød$_2$	L	Part No.	Dimensions in mm ød$_1$	ød$_2$	L
39715	50	85	12	135191	55	65	8
39716	50	90	8	40966	55	67	12
17811	50	90	10	17863	55	68	8
39717	50	90	12	90378	55	70	6
39722	50	110	10	17865	55	70	8
150146	50	125	10	39749	55	70	9
40948	51	64	7	19349	55	70	10
19320	51	65	13	39750	55	72	7
40949	51	70	10	19350	55	72	8
135223	52	63	6	19351	55	72	9
39723	52	63	8	17873	55	72	10
19322	52	65	9	39751	55	72	12
39725	52	65	10	126513	55	73	6
19325	52	68	8	39752	55	73.1	10
74174	52	68	10	39754	55	74	10
39727	52	68	13	79891	55	75	8
39728	52	69	10	19353	55	75	9
40953	52	70	7	37093	55	75	10
39730	52	70	8	19354	55	75	12
19326	52	70	9	17883	55	76	8
107203	52	70	10	17884	55	76	12
39732	52	72	8	40971	55	77	10
19327	52	72	9	39755	55	78	8
19328	52	72	10	40972	55	78	9
19329	52	72	12	26112	55	78	10
39733	52	75	9	19357	55	78	12
39734	52	75	10	36550	55	80	8
19330	52	75	12	17889	55	80	10
26165	52	75	15	39757	55	80	12
40954	52	78	12	40973	55	80	13
19332	52	80	8	40976	55	82	9.35
39739	52	85	10	39758	55	82	10
117720	52	100	10	40974	55	82	12
39737	53	65	10	40975	55	84	14
40952	53	66	6.4	39759	55	85	8
19334	53	72	10	26942	55	85	10
39736	54	65	13	19358	55	85	12
19336	54	66	7	40977	55	88	10
39740	54	68	10	40978	55	88	12
40958	54	68	12	40979	55	90	8
40959	54	70	9	17909	55	90	10
40960	54	70	10	39760	55	90	12
40961	54	72	8	36667	55	100	10
39742	54	72	9	40980	55	100	12
19338	54	72	10	39763	56	65	12
19341	54	74	10	39764	56	70	8
19342	54	76	8	19361	56	70	9
19344	54	76	13	82393	56	70	9.6
39744	54	76.2	10	39765	56	72	7
19345	54	80	13	39766	56	72	9
40964	54	80.5	12	39767	56	72	12.5
19346	54	81	10	39768	56	73.15	10
39746	54	82	10	39770	56	74	10
39747	54	82	11.45	60365	56	80	8
39748	54	85	10	19363	56	80	12

WAS

Sizes metric

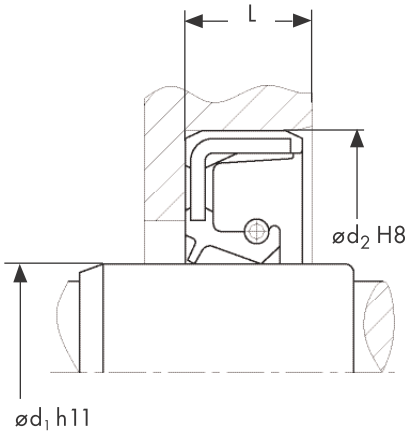

Part No.	Dimensions in mm ød1	ød2	L	Part No.	Dimensions in mm ød1	ød2	L
64977	56	85	8	19399	60	82	9
39771	56	85	13	41002	60	82	10
19366	56	86	13	39792	60	82	12
40981	56	90	13	39793	60	85	8
40982	56	100	10	17962	60	85	10
19367	56	100	12	39794	60	85	12
39772	57	67	7	39795	60	85	13
39773	57	73	7	39796	60	88	12
72779	57	75	7.5	41003	60	88	14
39775	57	79.5	10	35043	60	90	8
78268	57	80	12	17969	60	90	10
39777	57	85	12	19405	60	90	11
38801	57	85	13	39797	60	90	13
19369	57	86	13	41004	60	90	16
40989	57	88	13.5	41005	60	91	16
40988	57	89	13.5	75032	60	95	8
39778	58	68	9	19407	60	95	10
39779	58	72	8	39798	60	95	12
19373	58	72	9	39799	60	95	13
130960	58	72	10	130022	60	100	10
19374	58	72	12	144525	60	100	13
39780	58	74	10	39800	60	104	12
19376	58	75	9	149799	60	110	7
39781	58	75	12	155710	60	110	8
19377	58	75	13	39801	60	110	10
19378	58	76	13	152742	60	110	12
19379	58	80	8	153268	60	110	13
19380	58	80	9	39803	60.5	78	9
38061	58	80	10	39804	61	85	10
19382	58	80	12	19408	62	72	9
19383	58	80	13	75828	62	72	10
19384	58	82	12	19409	62	80	9
40994	58	85	10	41009	62	80	10
40995	58	90	8	39807	62	80	12
61783	58	90	10	115562	62	81	6
19387	58	90	11	39808	62	82	10
156526	60	70	7	39809	62	82	12
39251	60	72	8	41010	62	82.5	9.7
39783	60	72	12	39810	62	83	9
18476	60	75	8	39811	62	85	8
19393	60	75	9	39812	62	85	10
39784	60	75	10	19411	62	85	12
40997	60	75	12	39813	62	85	13
40998	60	75.4	10	39814	62	90	10
39786	60	77	12	39815	62	90	12
19395	60	78	9	41012	62	92	12
39787	60	78	10	41013	62	95	13
41000	60	78	12	19413	62	101	15
17946	60	80	7	134605	62	110	10
36551	60	80	8	117721	62	120	12
17948	60	80	9	39817	63	75	9
17950	60	80	10	19414	63	80	9
19398	60	80	12	41015	63	85	8
39789	60	80	13	19416	63	85	10
39790	60	82	7	39818	63	85	12

WAS

Sizes metric

Part No.	Dimensions in mm ød$_1$	ød$_2$	L	Part No.	Dimensions in mm ød$_1$	ød$_2$	L
39820	63	88	10	19433	68	86	10
39821	63	90	10	18059	68	87	8
39822	63.5	82	12	39911	68	88	9
39823	63.5	85	12	130942	68	90	7
39824	63.5	85	13	19434	68	90	10
41019	63.5	95	14	19435	68	90	12
37628	63.5	100	9.52	39256	68	90	13
61402	64	80	13	143295	68	92	10
39826	64	85	12	143322	68	92	12
18014	64	85	16	18062	68	94	8
41017	64	86	10	39912	68	95	13
18015	64	90	13	19439	68	100	10
48032	65	75	8	39913	68	100	12
39827	65	80	8	39914	68	110	13
20676	65	80	10	39916	70	80	10
19418	65	80	12	19440	70	84	8
39896	65	82	9	18067	70	85	8
41024	65	83	10	39921	70	85	9
39899	65	84	9	39922	70	85	10
39900	65	85	8	39923	70	87	10
18026	65	85	10	19442	70	88	12
19420	65	85	12	41038	70	89	12
18032	65	85	13	39924	70	90	7
19421	65	88	12	18073	70	90	10
39902	65	89	13	25646	70	90	12
41027	65	90	8	39925	70	90	13
19422	65	90	10	41058	70	92	7
19423	65	90	12	39926	70	92	9
19424	65	90	13	19445	70	92	12
41028	65	90	15	39927	70	92	13
39903	65	95	10	41061	70	93	12
39905	65	95	12	39928	70	95	10
19425	65	95	13	39929	70	95	12
19426	65	95	14	19448	70	95	13
41029	65	98	15	39930	70	95	14
19427	65	100	10	39931	70	98.5	13
19428	65	100	12	18087	70	100	8
22179	65	100	13	19449	70	100	10
39906	65	110	10	39932	70	100	12
80858	65	110	12	39933	70	100	13
117911	65	120	10	41065	70	100	14
34921	65	120	13	41063	70	100	15
41025	65	140	10	144062	70	105	12
41020	66	80	17	39934	70	105	13
41021	66.5	85	10	41066	70	105	15
41022	67	82.5	11	39935	70	110	8
39907	68	72	7	39936	70	110	10
39908	68	80	8	83449	70	110	12
57695	68	80	10	39938	70	110	13
39909	68	82	7	39939	70	115	13
81931	68	82	10	19454	70	115	15
41033	68	82	12	39940	70	125	12
19431	68	83	10	39941	71	88	8
39910	68	85	10	61800	72	86	7
19432	68	85	13	19455	72	88	8

WAS

Sizes metric

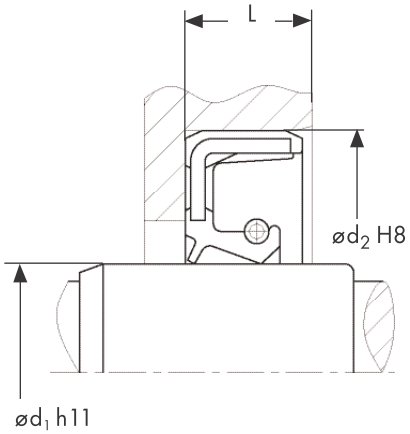

Part No.	Dimensions in mm ød1	ød2	L	Part No.	Dimensions in mm ød1	ød2	L
73959	72	90	10	39964	78	110	13
41068	72	92	12	41087	78	115	10
19457	72	94	12	75029	80	95	8
135200	72	95	10	118627	80	100	7
39942	72	96	9	18146	80	100	10
35704	72	100	10	19474	80	100	12
25648	72	100	12	19475	80	100	13
41069	72	100	13	41089	80	100	15
19459	72	105	10	41090	80	100	18
39943	72	105	13	41091	80	105	8.5
127466	72	110	13	39966	80	105	10
117722	72	140	12	39967	80	105	12
39945	73	96	9	19476	80	105	13
39946	74	93	12	19477	80	105	14
41070	74	95	10	41093	80	105	15
39947	74	96	9	41094	80	108	15
39948	74	98	12	18160	80	110	10
41072	75	90	6	26935	80	110	12
41073	75	90	7	39968	80	110	13
27537	75	90	8	39969	80	110	15
26174	75	90	10	27984	80	115	10
39949	75	92	12	39970	80	115	13
39950	75	95	7	19478	80	115	15
25653	75	95	8	116843	80	120	10
38470	75	95	9	39973	80	120	12
39951	75	95	10	39974	80	120	13
19461	75	95	12	50973	80	125	10
39181	75	95	13	41095	80	125	13
41077	75	98	12	39976	80	125	14
18125	75	100	10	34922	80	140	13
41084	75	100	12	41097	81.5	105	16
19465	75	100	13	39977	82	105	12
41079	75	100	14	39978	82	105	13
41080	75	100	15	117723	82	120	13
41081	75	101	13	117724	82	160	13
39952	75	102	12	41098	82.5	105	10
39954	75	105	12	127963	83	100	10
19466	75	105	13	150148	84	100	13
19467	75	105	15	41099	84	105	12
39956	75	110	10	19826	84	110	16
39957	75	110	12	41100	85	100	6
39958	75	110	13	39979	85	100	10
131001	75	120	10	39981	85	100	12
117912	75	120	12	19482	85	100	13
150147	75	130	10	41102	85	102	9
39959	76	98	12	38494	85	105	10
39960	76	100	12	39982	85	105	12
44560	76	100	16	19485	85	105	13
19471	76	105	12	35787	85	110	10
39962	76	105	13	19985	85	110	12
41085	78	98	12	18196	85	110	13
36900	78	100	10	19488	85	110	15
41086	78	100	12	39983	85	111	10
40678	78	100	13	36807	85	115	13
39963	78	110	12	39984	85	115	15

WAS

Sizes metric

Part No.	Dimensions in mm ød$_1$	ød$_2$	L	Part No.	Dimensions in mm ød$_1$	ød$_2$	L
41105	85	115	16	18260	95	115	13
156279	85	120	8	18263	95	120	10
74149	85	120	10	18265	95	120	12
26936	85	120	12	19511	95	120	13
19491	85	120	13	51572	95	125	10
41107	85	120	15	25879	95	125	12
41106	85	120	17	40002	95	125	15
39985	85	124	12	41128	95	125	20
39986	85	125	13	131000	95	130	8
19493	85	125	14	38760	95	130	12
36886	85	130	10	40003	95	130	13
18207	85	130	12	19512	95	130	15
60342	85	130	13	19513	95	135	13
81106	85	140	12	41131	95	135	14
41108	85	140	14	41132	95	135	20
39987	85	150	12	41133	95	140	13
121525	85	150	13	40005	95	145	13
41109	85	195	15	143728	95	145	15
56012	88	108	11	41135	97	123	14
41111	88	115	12	41137	97.5	120	12
78269	88	120	13	41136	97.5	124	12
41113	89	114	14	144066	98	120	13
19495	89	115	13	41138	98	125	12
144064	90	105	13	19514	100	116	12
126562	90	110	7.5	40006	100	118	12
39988	90	110	10	40007	100	120	10
18223	90	110	12	19516	100	120	12
19497	90	110	13	40008	100	120	13
37625	90	110	14	25647	100	120	17
27039	90	110	15	41140	100	125	8
144065	90	112	12	41139	100	125	10
75030	90	115	9	19518	100	125	12
39992	90	115	10	19520	100	125	13
41120	90	115	12	41141	100	127	10
19498	90	115	13	19521	100	130	12
19499	90	115	15	40010	100	130	13
39993	90	118	12	19523	100	130	14
41121	90	118	15	81251	100	135	10
19500	90	120	12	36506	100	135	12
19502	90	120	13	59322	100	135	13
41124	90	120	15	40011	100	135	14
39994	90	125	13	41142	100	135	15
39995	90	130	12	19524	100	137	11
39996	90	130	13	41143	100	139	19
39997	90	135	13	40012	100	140	12
131077	90	140	13	40013	100	140	13
41125	92	105	10	107334	100	150	12
41126	92	120	12	75071	100	150	13
19505	92	145	18	130981	100	150	14
19506	94	110	10.8	41145	100	162	12
19507	95	110	10	115714	100	165	13
40001	95	110	12	40015	100	180	12
41127	95	110	13	41144	101	114	10
19508	95	112	12	40016	101.57	125	13
19510	95	115	12	52513	102	115	10

WAS

Sizes metric

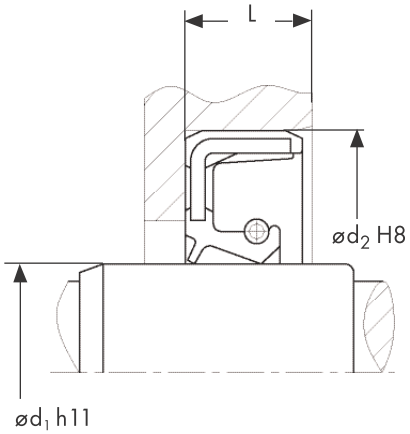

Part No.	Dimensions in mm ød1	ød2	L	Part No.	Dimensions in mm ød1	ød2	L
152182	105	120	9.5	40038	120	145	12
19527	105	125	11.7	41173	120	145	12.5
19528	105	125	13	40039	120	145	13
41147	105	127	10	56650	120	145	15
18663	105	130	12	41174	120	145	15.5
19531	105	130	13	38472	120	150	12
27040	105	130	15	40040	120	150	13
40019	105	135	13	19543	120	150	14
19532	105	135	14	38473	120	150	15
41148	105	135	15	41175	120	150	16
37452	105	136	13	41304	120	150	18
40020	105	140	12	41305	120	155	12
40021	105	140	13	40041	120	155	15
41149	105	140	15	41306	120	155	16
41150	105	145	15	37181	120	160	12
40022	106	126	13	40042	120	160	13
41152	110	125	9.5	38247	120	160	15
19533	110	126	18	115715	120	180	13
41154	110	130	10	128141	120	180	15
19534	110	130	12	152024	120	215	12
18329	110	130	13	38131	125	142	13
40025	110	130	15	38132	125	143	13
41155	110	130	18	38474	125	150	12
41156	110	133.5	11	40044	125	150	13
70451	110	135	12	40045	125	150	14
40026	110	135	13	40046	125	152.4	15
41161	110	135	14	38475	125	155	12
41162	110	135	15	40047	125	155	14
27500	110	140	12	41308	125	155	15
35013	110	140	13	40048	125	160	12
19537	110	140	14	41309	125	160	15
41163	110	140	15	41310	125	165	15
40028	110	145	14	73353	128	146	13.5
19538	110	145	15	40051	128	148	14
41164	110	148	15	44888	130	150	10
40029	110	150	13	38476	130	150	12
40030	110	160	13	83451	130	150	15
41167	110	170	12	41307	130	158.75	13
40031	110	200	13	38864	130	160	12
40032	112	142	12	40054	130	160	13
41170	115	135	14	19545	130	160	14
38471	115	140	12	19546	130	160	15
34841	115	140	13	41311	130	162	9
19540	115	145	14	41312	130	163	18
36549	115	150	12	127680	130	170	12
39254	115	150	13	40056	130	230	14
19541	115	150	15	19548	133	160	15
41171	115	151	10	40058	135	160	12
41172	115	165	15	40059	135	160	13
40034	116	132	12	19549	135	160	15
40035	118	140	13	69432	135	165	12
80570	118	150	12	72457	135	165	13
40638	120	140	12	40060	135	165	14
36844	120	140	13	41313	135	165	15
40036	120	140	14	19551	135	170	12

WAS

Sizes metric

Part No.	Dimensions in mm ød$_1$	ød$_2$	L	Part No.	Dimensions in mm ød$_1$	ød$_2$	L
40061	135	170	14	19559	160	190	15
36552	135	170	15	133016	160	190	16
36845	140	160	12	41329	160	192	12
40063	140	160	13	41328	160	195	15
41314	140	162	12	40084	160	200	12
131079	140	165	15	44527	160	200	15
38477	140	170	12	41320	160	210	20
40064	140	170	13	54467	165	190	8
19994	140	170	14	36847	165	190	13
37182	140	170	15	19562	165	190	15
41315	140	170	16	41331	165	195	15
37356	140	175	15	41330	165	195	16
40066	140	175	16	18700	165	200	15
40067	140	180	12	40085	170	190	13
40068	140	180	15	130994	170	200	12
124771	142	157	10	19563	170	200	15
59492	143	167	13	40086	170	200	16
40069	144	160	12	40088	170	205	15
41316	144	160	25	41332	170	205	16
19347	145	167	13	41333	170	210	15
40070	145	170	12	41321	170	225	20
152743	145	170	13	41322	170	225	23
53106	145	170	15	41324	174	230	22.5
89906	145	175	14	41323	175	191	12
40072	145	175	15	40089	180	200	15
40073	145	180	12	56500	180	200	16
41317	146	225	20	41335	180	210	10
36846	148	170	14	41334	180	210	14
151864	148	170	14.5	19564	180	210	15
74040	148	170	15	41336	180	210	16
41318	148	170	18	41337	180	215	15
37600	150	168	13	19565	180	215	16
40074	150	170	15	40090	180	220	13
54377	150	178	12	40091	180	220	15
108665	150	180	12	148704	180	220	18
40075	150	180	13	149417	182	215	15
40076	150	180	14	40092	185	210	13
19557	150	180	15	40093	185	210	15
73247	150	180	18	41339	185	250	24
40077	150	190	15	41338	188	238	16
151562	152	176	15	54725	190	215	15
55875	154	180	18	83453	190	215	16
41325	155	175	13	156265	190	220	12
19558	155	180	15	18458	190	220	15
41326	155	185	15	41340	190	225	15
40079	155	190	15	38478	190	225	16
34923	155	200	15	43126	190	230	15
41319	155	210	25	81230	190	230	16
41327	160	180	10	149877	190	230	18
40080	160	180	13	40095	190	240	15
40081	160	185	10	40096	190	240	25
39252	160	185	13	62312	195	215	15
148703	160	190	12	41342	195	231	20
40082	160	190	13	43124	195	235	15
132687	160	190	14	41341	195	235	16

WAS

Sizes metric

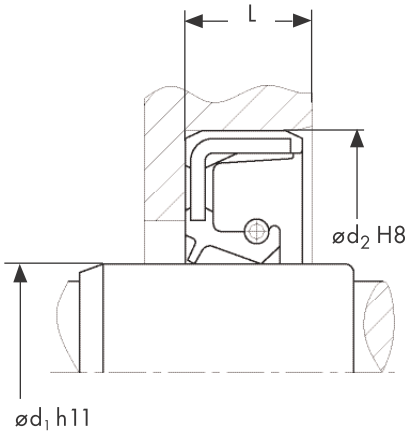

Part No.	Dimensions in mm ød1	ød2	L
41343	195	250	22
41344	195	255	20
43125	198	230	15
144484	200	230	13
37605	200	230	15
41345	200	230	16
41346	200	235	18
76111	200	240	18
41347	200	240	20
41283	200	255	22
133670	200	310	18
83454	207	240	16
43123	210	240	15
19569	210	250	15
41284	210	265	18
41285	210	275	26
83455	210	290	20
43122	215	245	15
41286	215	275	26
130993	220	250	14
40097	220	250	15
41287	220	260	14
148705	220	260	18
126850	220	260	22
43121	220	275	23
41288	225	260	15
38479	230	260	15
43114	230	260	20
44742	230	270	15
43113	230	270	22
38390	230	285	23
41289	240	265	15
43120	240	270	14
40100	240	270	15
41290	240	273	16
46812	250	280	15
41291	250	280	16
130995	260	290	15
20846	260	300	18
57081	270	310	16
44752	270	310	20
135147	270	320	18
41293	270	330	20
41292	279.3	310	17
39356	280	310	15
43116	280	310	16
43115	280	320	20
41294	280	340	28
130474	285	310	16
41295	290	330	18
44123	300	340	18
22028	300	340	20
41296	305	335	17
83456	310	340	15
41297	310	340	16

Part No.	Dimensions in mm ød1	ød2	L
44757	310	350	20
43117	320	350	15
41298	320	360	18
20713	320	360	20
44760	320	380	28
41299	322	354.5	17
124663	340	372	16
41300	340	380	20
72369	350	390	18
39226	350	400	12
83457	360	390	15
152487	360	400	20
132885	365	395	15
144469	370	410	15
26239	380	420	20
41302	385	415	17
37860	390	430	20
41301	390	440	25
56948	394	420	16
43118	395	432	20
57217	410	460	22
41303	420	460	20
38460	420	470	20
25049	440	480	20
25412	480	520	20
20670	480	530	25
56949	500	540	20
144007	520	545	18.5
122110	540	565	20
116528	560	600	18

WAS

Sizes inch

Part No.	Dimensions in mm			Dimensions in inch		
	ød$_1$	ød$_2$	L	ød$_1$	ød$_2$	L
59736	6.35	19.05	6.35	0.25	0.75	0.25
118788	7.93	22.22	6.35	0.312	0.875	0.25
59468	9.52	22.22	6.35	0.375	0.875	0.25
59737	11.02	25.4	6.35	0.434	1	0.25
35313	11.11	22.22	6.35	0.437	0.875	0.25
83460	12.7	22.22	6.35	0.5	0.875	0.25
59738	12.7	25.4	6.35	0.5	1	0.25
20796	12.7	25.4	7.93	0.5	1	0.312
59739	12.7	28.57	6.35	0.5	1.125	0.25
59740	14.28	25.4	6.35	0.562	1	0.25
59741	14.28	28.57	6.35	0.562	1.125	0.25
59742	15.08	31.75	6.35	0.594	1.25	0.25
59743	15.87	23.81	4.76	0.625	0.937	0.187
59744	15.87	25.4	4.76	0.625	1	0.187
59745	15.87	28.57	6.35	0.625	1.125	0.25
59746	15.87	31.75	6.35	0.625	1.25	0.25
59747	15.87	34.92	6.35	0.625	1.375	0.25
57048	16	28.65	6.3	0.63	1.128	0.248
117746	17.46	28.57	6.35	0.687	1.125	0.25
59748	17.46	31.75	6.35	0.687	1.25	0.25
59749	19.05	28.57	6.35	0.75	1.125	0.25
78748	19.05	28.57	7.93	0.75	1.125	0.312
21524	19.05	31.75	6.35	0.75	1.25	0.25
59758	19.05	31.75	7.93	0.75	1.25	0.312
107174	19.05	33.33	7	0.75	1.312	0.276
118285	19.05	33.33	7.93	0.75	1.312	0.312
49491	19.05	34.92	6.35	0.75	1.375	0.25
59759	19.05	34.92	12.7	0.75	1.375	0.5
59760	19.05	38.1	7.93	0.75	1.5	0.312
59761	19.05	38.1	9.52	0.75	1.5	0.375
59762	19.05	41.27	6.35	0.75	1.625	0.25
59763	19.05	44.45	7.93	0.75	1.75	0.312
83463	20.63	30.8	4.6	0.812	1.213	0.181
59765	20.63	31.75	6.35	0.812	1.25	0.25
116510	20.63	33.73	8.74	0.812	1.328	0.344
44130	22.22	34.92	6.35	0.875	1.375	0.25
49492	22.22	38.1	6.35	0.875	1.5	0.25
59766	22.22	38.1	9.52	0.875	1.5	0.375
59767	22.22	41.27	9.52	0.875	1.625	0.375
45066	22.22	47.62	6.35	0.875	1.875	0.25
59768	22.22	47.62	9.52	0.875	1.875	0.375
35743	22.22	47.62	11.11	0.875	1.875	0.437
59769	23.81	38.1	9.52	0.937	1.5	0.375
35746	23.81	44.45	7.93	0.937	1.75	0.312
57053	24.68	35	8.5	0.972	1.378	0.335
59770	24.99	38.07	6.35	0.984	1.499	0.25
39376	25	41.25	7.3	0.984	1.624	0.287
59771	25.4	36.51	6.35	1	1.437	0.25
40691	25.4	36.51	6.5	1	1.437	0.256
44766	25.4	38.1	6.35	1	1.5	0.25
56901	25.4	38.1	7.93	1	1.5	0.312
59772	25.4	38.1	9.52	1	1.5	0.375
59773	25.4	41.27	6.35	1	1.625	0.25
39883	25.4	41.27	7.93	1	1.625	0.312
117872	25.4	44.45	4.76	1	1.75	0.187

WAS

Sizes inch

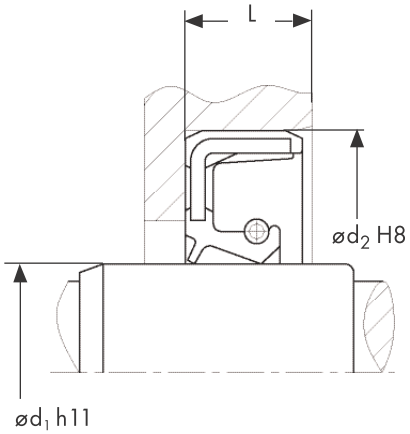

Part No.	Dimensions in mm ød1	ød2	L	Dimensions in inch ød1	ød2	L
45063	25.4	44.45	6.35	1	1.75	0.25
59774	25.4	44.45	9.52	1	1.75	0.375
59775	25.4	47.62	9.52	1	1.875	0.375
59776	25.4	50.8	6.35	1	2	0.25
59777	25.4	50.8	9.52	1	2	0.375
59778	25.4	50.8	12.7	1	2	0.5
37875	25.4	62	9.52	1	2.441	0.375
121347	28.5	38.1	6.2	1.122	1.5	0.244
57059	28.5	44.53	10	1.122	1.753	0.394
157019	28.57	39.67	6.35	1.125	1.562	0.25
59779	28.57	41.27	7.93	1.125	1.625	0.312
38468	28.57	41.27	9.52	1.125	1.625	0.375
34924	28.57	42.86	6.35	1.125	1.687	0.25
35744	28.57	42.86	7.93	1.125	1.687	0.312
59780	28.57	44.45	9.52	1.125	1.75	0.375
38095	28.57	45.24	6.35	1.125	1.781	0.25
144298	28.57	45.24	12.7	1.125	1.781	0.5
130185	28.57	46.53	7.93	1.125	1.832	0.312
59781	28.57	47.62	9.52	1.125	1.875	0.375
44814	28.57	50.8	6.35	1.125	2	0.25
59782	28.57	50.8	9.52	1.125	2	0.375
59783	28.57	61.91	11.11	1.125	2.437	0.437
57062	28.8	46.5	11.2	1.134	1.831	0.441
59817	30.16	44.45	4.76	1.187	1.75	0.187
59818	30.16	44.45	11.11	1.187	1.75	0.437
59819	30.16	50.8	9.52	1.187	2	0.375
21523	31.75	41.27	6.35	1.25	1.625	0.25
59820	31.75	42.86	6.35	1.25	1.687	0.25
59821	31.75	44.45	9.52	1.25	1.75	0.375
59822	31.75	47.62	9.52	1.25	1.875	0.375
19866	31.75	47.62	11.11	1.25	1.875	0.437
45064	31.75	50.8	6.35	1.25	2	0.25
20237	31.75	50.8	7.93	1.25	2	0.312
59823	31.75	50.8	9.52	1.25	2	0.375
59824	31.75	50.8	12.7	1.25	2	0.5
59825	31.75	53.97	9.52	1.25	2.125	0.375
135242	31.75	57.15	7.93	1.25	2.25	0.312
59826	31.75	57.15	9.52	1.25	2.25	0.375
127954	31.75	61.98	9.52	1.25	2.44	0.375
45065	31.75	63.5	9.52	1.25	2.5	0.375
59827	31.75	72	9.52	1.25	2.835	0.375
35742	31.75	82.55	11.11	1.25	3.25	0.437
39425	32.54	49.21	12.7	1.281	1.937	0.5
90946	34.74	47	9	1.368	1.85	0.354
59828	34.92	47.62	6.35	1.375	1.875	0.25
59829	34.92	47.62	7.93	1.375	1.875	0.312
118422	34.92	49.78	12.7	1.375	1.96	0.5
35747	34.92	50.8	7.93	1.375	2	0.312
59830	34.92	50.8	9.52	1.375	2	0.375
20848	34.92	50.8	11.11	1.375	2	0.437
60761	34.92	52.38	9.52	1.375	2.062	0.375
59831	34.92	53.97	9.52	1.375	2.125	0.375
40605	34.92	57.15	7.93	1.375	2.25	0.312
59832	34.92	57.15	9.52	1.375	2.25	0.375
59833	34.92	58.73	11.11	1.375	2.312	0.437

WAS

Sizes inch

Part No.	Dimensions in mm			Dimensions in inch		
	ød$_1$	ød$_2$	L	ød$_1$	ød$_2$	L
56227	34.92	59.13	10.31	1.375	2.328	0.406
59834	34.92	60.32	9.52	1.375	2.375	0.375
59835	34.92	63.5	9.52	1.375	2.5	0.375
59836	34.92	63.5	19.05	1.375	2.5	0.75
24849	34.92	63.8	19.05	1.375	2.512	0.75
34925	36.51	50.8	7.93	1.437	2	0.312
59837	36.51	52.38	7.93	1.437	2.062	0.312
44208	36.51	52.58	7.93	1.437	2.07	0.312
59839	36.51	57.15	9.52	1.437	2.25	0.375
59838	36.51	59.13	6.35	1.437	2.328	0.25
35745	36.51	73.02	15.87	1.437	2.875	0.625
56553	38.1	50.8	6.35	1.5	2	0.25
59840	38.1	52.38	6.35	1.5	2.062	0.25
59841	38.1	53.97	9.52	1.5	2.125	0.375
59842	38.1	57.15	9.52	1.5	2.25	0.375
39536	38.1	57.15	12.7	1.5	2.25	0.5
59843	38.1	60.32	9.52	1.5	2.375	0.375
59844	38.1	63.5	9.52	1.5	2.5	0.375
59845	38.1	66.67	9.52	1.5	2.625	0.375
128123	38.1	68.99	7.93	1.5	2.716	0.312
59846	38.1	69.85	9.52	1.5	2.75	0.375
59847	38.1	69.85	12.7	1.5	2.75	0.5
59848	39.68	58.75	9.52	1.562	2.313	0.375
59849	39.68	58.93	9.52	1.562	2.32	0.375
59850	39.68	60.32	9.52	1.562	2.375	0.375
59852	39.68	63.5	9.52	1.562	2.5	0.375
59851	39.68	63.5	12.7	1.562	2.5	0.5
117747	39.68	68.26	9.52	1.562	2.687	0.375
59853	40.49	58.75	9.52	1.594	2.313	0.375
39195	41.27	57.15	7.93	1.625	2.25	0.312
59854	41.27	57.15	9.52	1.625	2.25	0.375
21956	41.27	60.32	9.52	1.625	2.375	0.375
59855	41.27	63.5	9.52	1.625	2.5	0.375
59508	41.27	63.5	12.7	1.625	2.5	0.5
59856	41.27	66.67	9.52	1.625	2.625	0.375
107207	41.27	73.42	9.92	1.625	2.891	0.391
39196	42.86	57.15	7.93	1.687	2.25	0.312
59857	42.86	69.85	9.52	1.687	2.75	0.375
59858	43	54.99	7.01	1.693	2.165	0.276
81271	43.66	60.32	9.52	1.719	2.375	0.375
59859	44.45	57.15	9.52	1.75	2.25	0.375
59860	44.45	58.73	6.35	1.75	2.312	0.25
22626	44.45	60.32	9.52	1.75	2.375	0.375
35512	44.45	60.53	9.52	1.75	2.383	0.375
59861	44.45	63.5	7.93	1.75	2.5	0.312
59862	44.45	63.5	9.52	1.75	2.5	0.375
117748	44.45	63.5	12.7	1.75	2.5	0.5
59863	44.45	66.67	9.52	1.75	2.625	0.375
128124	44.45	68.99	7.93	1.75	2.716	0.312
22180	44.45	69.85	9.52	1.75	2.75	0.375
59864	44.45	69.85	12.7	1.75	2.75	0.5
59865	44.45	73.02	9.52	1.75	2.875	0.375
59866	44.45	76.2	9.52	1.75	3	0.375
59867	46.03	63.5	9.52	1.812	2.5	0.375
59868	47.62	63.5	9.52	1.875	2.5	0.375

WAS

Sizes inch

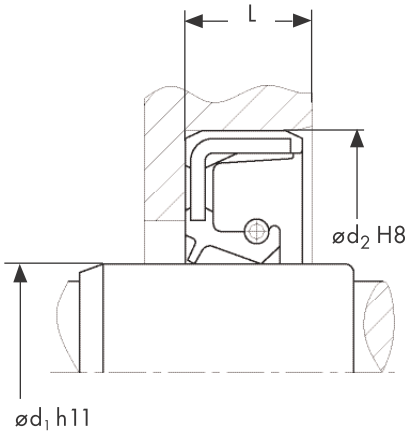

Part No.	Dimensions in mm ød1	ød2	L	Dimensions in inch ød1	ød2	L
59869	47.62	66.67	9.52	1.875	2.625	0.375
59870	47.62	69.85	9.52	1.875	2.75	0.375
59871	47.62	69.85	12.7	1.875	2.75	0.5
59872	47.62	73.02	9.52	1.875	2.875	0.375
59873	47.62	76.2	9.52	1.875	3	0.375
59874	47.62	79.37	12.7	1.875	3.125	0.5
59875	49.21	63.5	9.52	1.937	2.5	0.375
27023	49.21	69.85	9.52	1.937	2.75	0.375
59876	49.21	76.2	12.7	1.937	3	0.5
59877	50.8	63.5	6.35	2	2.5	0.25
59878	50.8	66.67	9.52	2	2.625	0.375
59879	50.8	69.85	9.52	2	2.75	0.375
59880	50.8	69.85	11.11	2	2.75	0.437
59881	50.8	69.85	12.7	2	2.75	0.5
59882	50.8	73.02	9.52	2	2.875	0.375
59883	50.8	76.2	9.52	2	3	0.375
59884	50.8	76.2	12.7	2	3	0.5
59885	50.8	77.78	12.7	2	3.062	0.5
39738	52.38	66.67	7.93	2.062	2.625	0.312
59886	52.38	73.02	9.52	2.062	2.875	0.375
59887	53.97	73.02	9.52	2.125	2.875	0.375
59888	53.97	76.2	9.52	2.125	3	0.375
59889	53.97	76.2	12.7	2.125	3	0.5
59890	53.97	77.75	12.7	2.125	3.061	0.5
59891	53.97	79.37	9.52	2.125	3.125	0.375
59892	53.97	82.55	9.52	2.125	3.25	0.375
59893	53.97	85.62	11.91	2.125	3.371	0.469
59894	55.56	73.02	9.52	2.187	2.875	0.375
21860	55.56	73.02	12.7	2.187	2.875	0.5
59895	55.56	76.2	9.52	2.187	3	0.375
59896	55.56	82.55	9.52	2.187	3.25	0.375
59897	57.15	69.85	9.52	2.25	2.75	0.375
56285	57.15	76.2	9.52	2.25	3	0.375
40990	57.15	76.2	11.11	2.25	3	0.437
59898	57.15	79.37	9.52	2.25	3.125	0.375
59899	57.15	82.55	11.11	2.25	3.25	0.437
59900	57.15	85.72	12.7	2.25	3.375	0.5
59901	57.15	88.9	12.7	2.25	3.5	0.5
37627	57.15	129.78	9.52	2.25	5.109	0.375
59902	57.35	79.37	9.52	2.258	3.125	0.375
59903	58.73	85.09	7.93	2.312	3.35	0.312
59904	58.73	85.72	9.52	2.312	3.375	0.375
59905	59.97	129.99	9.52	2.361	5.118	0.375
59906	60.32	73.02	7.93	2.375	2.875	0.312
59907	60.32	73.02	9.52	2.375	2.875	0.375
59908	60.32	76.2	9.52	2.375	3	0.375
59909	60.32	79.37	9.52	2.375	3.125	0.375
59910	60.32	82.55	9.52	2.375	3.25	0.375
59911	60.32	85.72	9.52	2.375	3.375	0.375
59912	60.32	85.72	12.7	2.375	3.375	0.5
59913	60.32	88.9	12.7	2.375	3.5	0.5
47912	60.33	88.9	12.7	2.375	3.5	0.5
59914	61.91	85.72	12.7	2.437	3.375	0.5
59915	63.5	80.96	9.52	2.5	3.187	0.375
59916	63.5	82.55	9.52	2.5	3.25	0.375

WAS

Sizes inch

Part No.	Dimensions in mm			Dimensions in inch		
	ød$_1$	ød$_2$	L	ød$_1$	ød$_2$	L
41018	63.5	82.55	10.5	2.5	3.25	0.413
47925	63.5	85.72	6.35	2.5	3.375	0.25
59917	63.5	85.72	12.7	2.5	3.375	0.5
39185	63.5	88.9	9.52	2.5	3.5	0.375
59918	63.5	88.9	12.7	2.5	3.5	0.5
59919	63.5	88.9	19.05	2.5	3.5	0.75
39825	63.5	90.09	12.7	2.5	3.547	0.5
59920	63.5	90.88	12.7	2.5	3.578	0.5
59922	63.5	95.25	12.7	2.5	3.75	0.5
61760	63.5	114.3	12.7	2.5	4.5	0.5
48376	65.08	88.9	12.7	2.562	3.5	0.5
59923	66.67	85.72	9.52	2.625	3.375	0.375
59924	66.67	85.83	9.52	2.625	3.379	0.375
59925	66.67	88.9	12.7	2.625	3.5	0.5
59926	66.67	92.07	12.7	2.625	3.625	0.5
59927	66.67	95.25	12.7	2.625	3.75	0.5
59928	66.67	95.25	15.87	2.625	3.75	0.625
59929	66.67	101.6	12.7	2.625	4	0.5
59930	68.26	95.25	12.7	2.687	3.75	0.5
59931	69.85	86.09	7.93	2.75	3.389	0.312
27022	69.85	88.9	9.52	2.75	3.5	0.375
20847	69.85	88.9	12.7	2.75	3.5	0.5
59932	69.85	95.25	9.52	2.75	3.75	0.375
59933	69.85	95.25	12.7	2.75	3.75	0.5
59934	69.85	98.42	12.7	2.75	3.875	0.5
59935	69.85	101.6	12.7	2.75	4	0.5
59936	69.85	107.95	12.7	2.75	4.25	0.5
59937	71.43	88.9	9.52	2.812	3.5	0.375
37195	71.43	92.07	9.52	2.812	3.625	0.375
73972	71.81	86.05	7	2.827	3.388	0.276
59938	73.02	92.07	9.52	2.875	3.625	0.375
59939	73.02	95.25	12.7	2.875	3.75	0.5
59940	73.02	98.42	12.7	2.875	3.875	0.5
59941	73.02	101.6	12.7	2.875	4	0.5
59942	76.2	95.25	9.52	3	3.75	0.375
59943	76.2	101.6	9.52	3	4	0.375
59609	76.2	101.6	12.7	3	4	0.5
59944	76.2	107.95	12.7	3	4.25	0.5
59945	76.2	114.3	12.7	3	4.5	0.5
59946	79.37	104.77	12.7	3.125	4.125	0.5
59947	80.96	117.47	12.7	3.187	4.625	0.5
83450	80.96	120.65	12.7	3.187	4.75	0.5
59948	82.55	101.6	12.7	3.25	4	0.5
59949	82.55	107.95	12.7	3.25	4.25	0.5
59950	82.55	111.12	12.7	3.25	4.375	0.5
59951	82.55	114.3	12.7	3.25	4.5	0.5
59952	82.55	117.47	12.7	3.25	4.625	0.5
59953	84.13	114.3	12.7	3.312	4.5	0.5
59954	85.72	114.3	12.7	3.375	4.5	0.5
59955	85.72	117.47	9.52	3.375	4.625	0.375
59956	85.72	117.47	12.7	3.375	4.625	0.5
59957	85.72	120.65	12.7	3.375	4.75	0.5
59958	87.31	114.3	12.7	3.437	4.5	0.5
59959	88.9	107.95	12.7	3.5	4.25	0.5
41112	88.9	111.12	9.52	3.5	4.375	0.375

WAS

Sizes inch

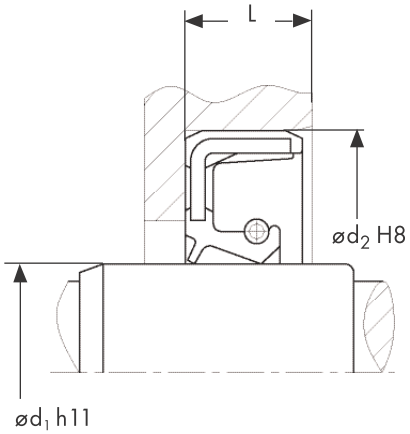

Part No.	Dimensions in mm ød1	ød2	L	Dimensions in inch ød1	ød2	L
59960	88.9	111.12	12.7	3.5	4.375	0.5
59961	88.9	114.3	9.52	3.5	4.5	0.375
21957	88.9	114.3	12.7	3.5	4.5	0.5
59962	88.9	120.65	12.7	3.5	4.75	0.5
81256	88.9	120.65	14.28	3.5	4.75	0.562
37928	92.07	111.12	11.11	3.625	4.375	0.437
59963	92.07	114.3	12.7	3.625	4.5	0.5
59964	92.07	117.47	12.7	3.625	4.625	0.5
59965	92.07	123.82	12.7	3.625	4.875	0.5
59966	92.07	142.87	12.7	3.625	5.625	0.5
59967	93.66	123.82	12.7	3.687	4.875	0.5
59968	93.66	142.87	12.7	3.687	5.625	0.5
59969	95.25	114.3	12.7	3.75	4.5	0.5
59970	95.25	117.47	9.52	3.75	4.625	0.375
59971	95.25	120.65	12.7	3.75	4.75	0.5
59972	95.25	142.87	12.7	3.75	5.625	0.5
59973	96.83	123.82	12.7	3.812	4.875	0.5
59974	98.42	127	12.7	3.875	5	0.5
59975	98.42	130.17	12.7	3.875	5.125	0.5
59976	98.42	133.35	12.7	3.875	5.25	0.5
59977	98.42	136.52	12.7	3.875	5.375	0.5
59978	98.42	144.52	12.7	3.875	5.69	0.5
24260	101.6	127	12.7	4	5	0.5
59979	101.6	130.17	12.7	4	5.125	0.5
59980	101.6	133.35	12.7	4	5.25	0.5
39583	101.6	139.7	12.7	4	5.5	0.5
59981	107.95	133.35	12.7	4.25	5.25	0.5
59982	107.95	139.7	12.7	4.25	5.5	0.5
59983	107.95	142.87	12.7	4.25	5.625	0.5
59984	107.95	146.05	12.7	4.25	5.75	0.5
59985	111.12	136.52	12.7	4.375	5.375	0.5
59986	111.12	152.4	12.7	4.375	6	0.5
59987	114.3	133.35	12.7	4.5	5.25	0.5
59988	114.3	139.7	12.7	4.5	5.5	0.5
59989	114.3	146.05	12.7	4.5	5.75	0.5
37748	114.3	146.43	21.84	4.5	5.765	0.86
59990	114.3	152.4	12.7	4.5	6	0.5
44486	114.3	155.57	14.28	4.5	6.125	0.562
59991	114.3	158.75	12.7	4.5	6.25	0.5
59992	114.3	158.75	14.28	4.5	6.25	0.562
38024	114.3	174.62	14.28	4.5	6.875	0.562
59993	117.47	142.87	12.7	4.625	5.625	0.5
70395	120.25	146.1	14.2	4.734	5.752	0.559
59995	120.65	146.05	9.52	4.75	5.75	0.375
59994	120.65	146.05	12.7	4.75	5.75	0.5
59996	120.65	152.4	14.28	4.75	6	0.562
59997	123.82	158.75	14.28	4.875	6.25	0.562
59998	127	152.4	12.7	5	6	0.5
59999	127	158.75	14.28	5	6.25	0.562
78423	127	161.92	15.87	5	6.375	0.625
60000	127	165.1	12.7	5	6.5	0.5
40052	128.57	160	14	5.062	6.299	0.551
60001	130.17	155.57	12.7	5.125	6.125	0.5
60002	133.35	158.75	12.7	5.25	6.25	0.5
60003	133.35	165.1	14.28	5.25	6.5	0.562

WAS

Sizes inch

Part No.	Dimensions in mm			Dimensions in inch		
	ød$_1$	ød$_2$	L	ød$_1$	ød$_2$	L
60004	136.52	161.92	12.7	5.375	6.375	0.5
60005	139.7	165.1	12.7	5.5	6.5	0.5
60006	140.2	158.75	12.7	5.52	6.25	0.5
60007	142.87	177.8	12.7	5.625	7	0.5
60008	146.05	177.8	12.7	5.75	7	0.5
60009	152.4	177.8	12.7	6	7	0.5
83452	152.4	187.32	19.05	6	7.375	0.75
60010	152.4	190.5	12.7	6	7.5	0.5
60011	155.58	180.98	12.7	6.125	7.125	0.5
20232	158.75	177.8	9.52	6.25	7	0.375
60012	158.75	184.15	12.7	6.25	7.25	0.5
44455	161.92	187.32	12.7	6.375	7.375	0.5
60013	165.1	190.5	12.7	6.5	7.5	0.5
60014	171.45	196.85	12.7	6.75	7.75	0.5
130195	171.45	209.55	14.28	6.75	8.25	0.562
60015	177.8	203.2	12.7	7	8	0.5
60016	177.8	203.2	19.05	7	8	0.75
27292	177.8	215.9	12.7	7	8.5	0.5
20932	177.8	215.9	19.05	7	8.5	0.75
60017	184.15	222.25	15.87	7.25	8.75	0.625
60018	196.85	234.95	12.7	7.75	9.25	0.5
20931	203.2	241.3	19.05	8	9.5	0.75
35734	215.9	254	19.05	8.5	10	0.75
60019	234.95	273.05	15.87	9.25	10.75	0.625
79107	247.65	279.4	19.05	9.75	11	0.75
60020	254	292.1	14.28	10	11.5	0.562
55892	323.85	346.07	14.28	12.75	13.625	0.562
43119	381	425.45	19	15	16.75	0.748