CombiPlus

Power Management Control System

Invertek

Pure Sine Wave

Interactive Inverter Charger

USER MANUAL

Rich Electric Drives the world

ISO 9001 No:182886

CE Mark Safety Approved

C-Tick Mark Safety Approved

RICH ELECTRIC

Rich Electric Drives the world

USER MANUAL

e 9 03 6169
e 9 03 6170

ISO 9001 No:119764

RICH ELECTRIC

Invertek

Pure Sine Wave

Interactive Inverter Charger

Table of CONTENTS

Introduction .....

Features 7
Layout 8
About CombiPlus 9
Specifications 10
Dimensions 13

Chapter 1 Installation .....

1.1 Box Contents 17
1.2 Location 18
1.3 Requirements 19
1.4 Connection of Battery Cables 19
1.5 Connection of AC Cabling 20
1.6 AC Cabling Schematic Layout (Multiple Ciruits AC Output) 22
1.7 AC Cabling Schematic Layout (Single Ciruit AC Output) 23
1.8 Second Battery 24
1.9 Voltage Sense 24
1.10 Battery Temperature Sensor (BTS-3) 24
1.11 Three Sets of Automatic Relays (RY1,RY2,RY3) Outputs 24
1.12 Parrellel Conection 24
1.13 3-Phase Operation 25
1.14 MEN (Main Earth Neutral) Grounding 25
1.15 Remote Control Panel (RCP-4) 25
1.16 Ventilation (Standard Single Unit) 26
1.17 Ventilation (Optinal Fan Cover Application) "Standard Single Unit" 26
1.18 Ventilation (Multible or 3-Phase Appliaction) 27

Chapter 2 Wiring .....
2.1 Lower Front Panel Connections 28
2.2 Battery "Star Connection" Schematic 30
2.3 Battery "Rail Connection" Schematic 31
2.4 AC ParrellelConnection Schematic 32
2.5 AC 3-Phase Conection Schematic 33
2.6 AC 3-Phase System 15 Modules 34

Chapter 3 Battery Types .....
3.1 Sealed Batteries 35
3.2 AGM 35
3.3 Gel 36
3.4 Flooded Batteries 36
3.5 Lead-Calcium 37
3.6 Lead-selenium 37
3.7 Lead-Antimony 37

Chapter 4 Operation .....
4.1 Front Panel Display 38
4.2 Front Panel Button Operations 40
4.3 Main Menu 42
4.4 Main Menu: Programing "Operation" 43
4.5 Main Menu: Programing "Key Selections" 45
4.6 Main Menu: Operation "Monitor" 46
4.7 Main Menu: Operation "Fault Trace" 49
4.8 Main Menu: Operation "Fault History" 52

Chapter 5 Mode Settings .....
5.1 Four Control Modes Applicatioin 54
MODE 1: AC Power as Priority Support 55
MODE 2: AC Generator Support with Dynamic Power Shifting 60
5.2 Green Power Smart Feature 64
MODE 3: Renewable Energy with Power Support 66
MODE 4: Renewable Energy with AC Charger Backup Support 70

Chapter 6 Programming .....
A Group: Initialize 74
B Group: General 77
C Group: Inverter 86
D Group: Battery Charger 88
E Group: Aux-Relay 92
O Group: Operator 43
U Group: Monitor 46

Chapter 5 User Constants "Flow Chart" 99

Chapter 5 Constants List 109
U Group: Monitor 110
A Group: Initialize 110
B Group: General 110
C Group: Inverter 112
D Group: Battery Charger 113
E Group: Aux-Relay 113
F Group: Solar Charger 118
O Group: Operator 118

Chapter 9 Trouble Shooting Table 124

Appendix A: EMC for Wall-Mounting/Vertical CombiPlus
Appendix B: LVD for Wall-Mounting/Vertical CombiPlus
Appendix C: C-Tick for Wall-Mounting/Vertical CombiPlus
Appendix D: EMC for Table-Mounting/Horizontal CombiPlus
Appendix E: LVD for Table-Mounting/Horizontal CombiPlus
Appendix F: C-Tick for Table-Mounting/Horizontal CombiPlus

Introduction

The Ultimate Interactive DC to AC Inverter/Charger Power Management Control System ideally designed for Home, Boat, Caravan or RV.

CombiPlus
Power Management Control System

Features:

- **Intelligent Mains Grid Power and Generator Power Management Control.**
- **ATS Uninterrupted AC power Transfer Switch (UPS function).**
- **Two and Three phase AC output capability, for the more demanding loads*.**
- **Power Support Feature: boosting the capacity of shore or generator power,**
- **Power Shifting Feature: avoids sudden loads on generator causing voltage spikes.**
- **Interactive Power Sharing: programmable AC input control system**
- **Four stage adaptive charging system with dual bank battery charging, up to 140Amps & 4 Amps starter battery.**
- **Programmable auxiliary relay contacts (x3)**
- **Solar charging capacity up to a massive 1920Amps*.**
- **Remote control replica of main control panel with LCD display*.**
- **Power Stack, Need more power? Just keep stacking! for increased power upgrade*.**
- **"Green Power Smart" This feature is designed to conserve energy when connected to the mains grid supply or AC Generator.**
- **Powerful Interactive Bi-Directional True Pure Sine Wave Inverter / Charger.**

***Requires optional accessories, please see installation section for more information.**

Invertek
Pure Sine Wave
Interactive Inverter Charger

Layout:

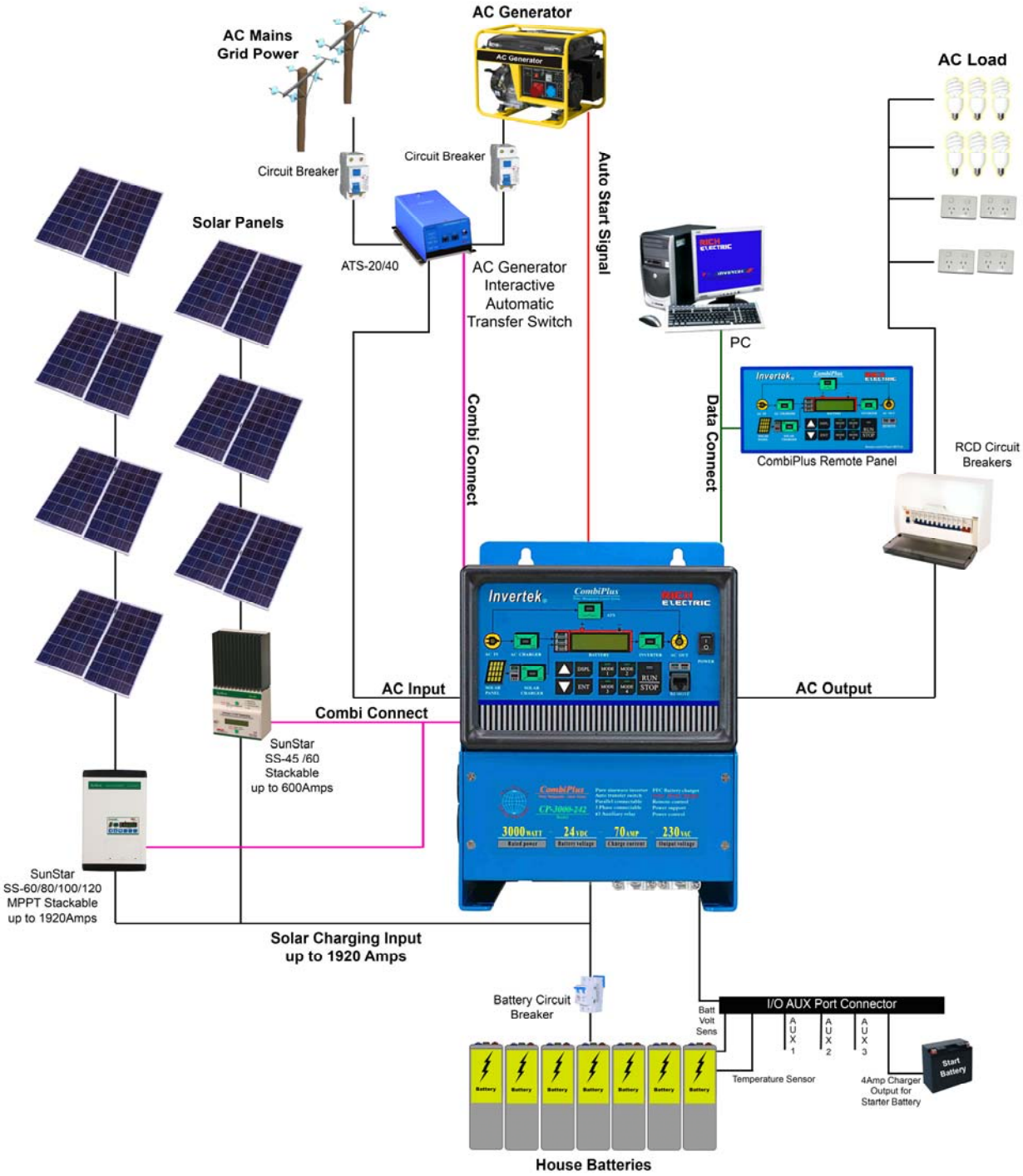
AC Mains
Grid Power
AC Generator
AC Load
Circuit Breaker
Circuit Breaker
Auto Start Signal
Solar Panels
ATS-20/40
AC Generator
Interactive
Automatic
Transfer Switch
PC
Combi Connect
Data Connect
CombiPlus Remote Panel
RCD Circuit
Breakers
AC Input
AC Output
Combi Connect
SunStar
SS-45 /60
Stackable
up to 600Amps
SunStar
SS-60/80/100/120
MPPT Stackable
up to 1920Amps
Solar Charging Input
up to 1920 Amps
Battery Circuit
Breaker
I/O AUX Port Connector
Batt
Volt
Sens
AUX 1
AUX 2
AUX 3
Temperature Sensor
4Amp Charger
Output for
Starter Battery
Start
Battery
House Batteries

About CombiPlus:

The “Combi” Functional Interactive Bi-Directional Inverter has a dual function.
This unit can operate as a battery charger or as a power inverter.
The system utilizes sophisticated circuitry to manage and control your power requirements.
The CombiPlus is ideally designed for your car, boat, recreational vehicle or basically anywhere mains power is required.
The CombiPlus features a powerful true pure sine wave inverter that converts DC battery voltage to AC high voltage producing a clean, smooth power output,
Ideal for the most sensitive electronic equipment.
This superior, extremely efficient power conversion system will run even the most demanding mains operated appliances when the grid power is unavailable.
CombiPlus also has a powerful 4 stage battery charger that is capable of delivering up to a Huge 140 Amps. (3000watt , 12v Model)
There is also a 4 Amp charging output great for keeping the starter battery in an RV or Generator constantly charged.
Solar Panels can also be connected to the CombiPlus through optional SunStar® SS-45/60 or MPPT SunStar® controller allowing the batteries to be recharged giving you even more flexibility when you are away from mains powered sites.
The CombiPlus has many unique features like its big brother the “SuperCombi”.
This includes stacking for increased power output, 3 phase power option,
(Requires optional parallel or 3-Phase modules and additional CombiPlus units).
Power Support, where the input supply from an AC generator and the inverter can be combined together to support heavy start-up loads such as air-conditioners.
Interactive Power Sharing, where the AC input supply can be programmed to a Maximum limit; this will protect against unwanted power tripping from the mains supply.
For example, If you turn on an electric jug and air-conditioner at the same time, the shore power circuit breaker will likely trip leaving you without power, with the Combi’s Smart Power Management System will then use its Power Support feature to boost the mains input by using the Inverters output and shore power input together until the load decreases.
The CombiPlus also offers automatic switching between the mains AC and the inverter known as an Auto Transfer Switch or ATS. This will provide a seamless power switch over between the mains input and the inverter power so no manual switching is required, CombiPlus does it all for you.
CombiPlus can also automatically start your compatible backup generator in the case of a low battery or excessive high load usage and then turn the generator back off when not required.

Specifications

MODEL	12 Volt System 24 Volt System 48 Volt System	CP-1500-12X (1) CP-1500-24X CP-1500-48X	CP-3000-12X (1) CP-3000-24X CP-3000-48X
GENERAL			
Ventilation		Fan Forced cooling	Fan Forced cooling
Temperature	– Operation – Storage	-20°C~ +70°C -25°C~ +80°C	-20°C~ +70°C -25°C~ +80°C
Protection			
	a. Output short circuit	✓	✓
	b. Over load	✓	✓
	c. Battery voltage too high	✓	✓
	d. Battery voltage too low	✓	✓
	e. DC voltage ripple too high	✓	✓
	f. Temperature Sensor		
	Transformer	(105°C)	(105°C)
	Electronic & Powerstage	(70°C)	(70°C)
	Battery Temp BTS-3	(50°C)	(50°C)
Humidity		0~95% (non condensing)	0~95% (non condensing)
Power support Function		✓	✓
Power shifting Function		✓	✓
Uninterrupted AC power		(less than 10 msec)	(less than 10 msec)
Adaptive 4-stage charge		✓	✓
Two output to charge 2 battery banks		✓	✓
Auxiliary Relay		X 3	X 3
Parallel operation (Requires optional CP-PX)		(Max. 5 sets)	(Max. 5 sets)
3-phase capacity (Requires optional CP-3PX)		✓	✓
Battery voltage sensor		✓	✓
Battery Temperature sensor (BTS-3 Optional)		✓	✓
Remote control port		✓	✓
Extension Port (Port C)		✓	✓

INVERTER	
Input Voltage Range (VDC)	12V-(9.5 -16V) / 24V-(19-32V) / 48V-(38-64V)
Output Voltage (VAC)	210~245 VAC / 94~128 VAC
Output Frequency	50Hz /60Hz ± 0.1%
Output Waveform	True Pure Sinewave

Output Voltage THD	< 5%	
Power Factor (All Loads)	✓	
No linger load, crest factor	3: 1	
Cont. Power Output @ 70℃ (W) Under 70℃ (cos θ =1.0)	1500Watt (No derate 70℃)	3000Watt (No derate 70℃)
Cont. Power Output (W) Over 70℃ (cos θ =1.0)	0W (Shutdown)	0W (Shutdown)
Maximum Power (W)	3000Watt	6000Watt
Maximum Efficiency (%)	82/84/85	84/86/89
Zero-load Power (W)	(8W Power Save) 12W (Normal)	(12W Power Save) 18W (Normal)
CHARGER		
Input Voltage Range (VAC)	180~265 VAC / 94~138 VAC	
Input Frequency	45-55Hz /55-65 Hz	
Power Factor	1	
Charge Characteristic	4-stage adaptive / Bulk-Absorption-Float-Equalize + Safe	
Maximum DC Voltage Ripple (Vrms)	< 1.25 V	
Charge Current House Battery (A)	70A/40A/20A	140A/70A/40A
Charge Current Starter Battery (A)	4A	
Output Charging Voltage (VDC)	12~16V / 24~32V / 48~64V	
Absorption Voltage Default (VDC)	14.4V / 28.8V / 57.6V	
Float voltage Default (VDC)	13.8V / 27.6V / 55.2V	
Equalize Voltage default (VDC)	13.2V / 26.4V / 52.8V	
Output Charge Voltage (min ~ max)	8V~16V / 11V~32V / 22V~64V	
Battery Temperature sensor	BTS-3 (optional)	

AC INPUT SWITCH		
AC IN Internal Terminal Circuit Breaker	1500w: 30A -(110V) 15A -(230V) 3000w: 60A -(110V) 30A -(230V)	
AC IN Auto Transfer Switch Current	1500w: 32A- (110V) 16A -(230V) 3000w: 63A -(110V) 32A -(230V)	
Switch-over Time		
a. inverter to AC input	0 msec.	
b. AC input to inverter	0 msec.	
Detection Time AC Input Fault	4 ~10 msec.	
Trip Level AC Low Input to Inverter	Default Setting: 94 VAC (94~120V) 110v Model 180 VAC (180~230V) 230v Model	
Trip Level Inverter to AC Low Input	Default Setting: 101 VAC (95~121V) 110v Model 187VAC (181~231V) 230v Model	
Trip Level Inverter to AC High Input	Default Setting: 138 VAC (119~142V) 110v Model 265 VAC (229~269V) 230v Model	
Trip Level AC High Input to Inverter	Default Setting: 143 VAC (120~143V) 110v Model 270 VAC (230~270V) 230v Model	
Min.~ Max. Frequency Range	45-55 Hz / 55-65 Hz	
MECHANICAL		
Cabinet / Protecting Class	Aluminum / IP20	
Dimension (HXWXD)	362 x 258 x 370 mm	424 x 258 x 370 mm
Weight (kgs)	21 kgs	27 kgs

(1) X should be 1, output voltage = 94~128 VAC or 2, output voltage = 210~245 VAC

Specifications subject to change

Rich Electric Drives the world

Invertek
Pure Sine Wave
Interactive Inverter Charger

Dimensions

Dimensions 1500watt Model

Dimension for Wall Mounting/Vertical CombiPlus 1500W
CP-1500W-12/24

Unit: mm

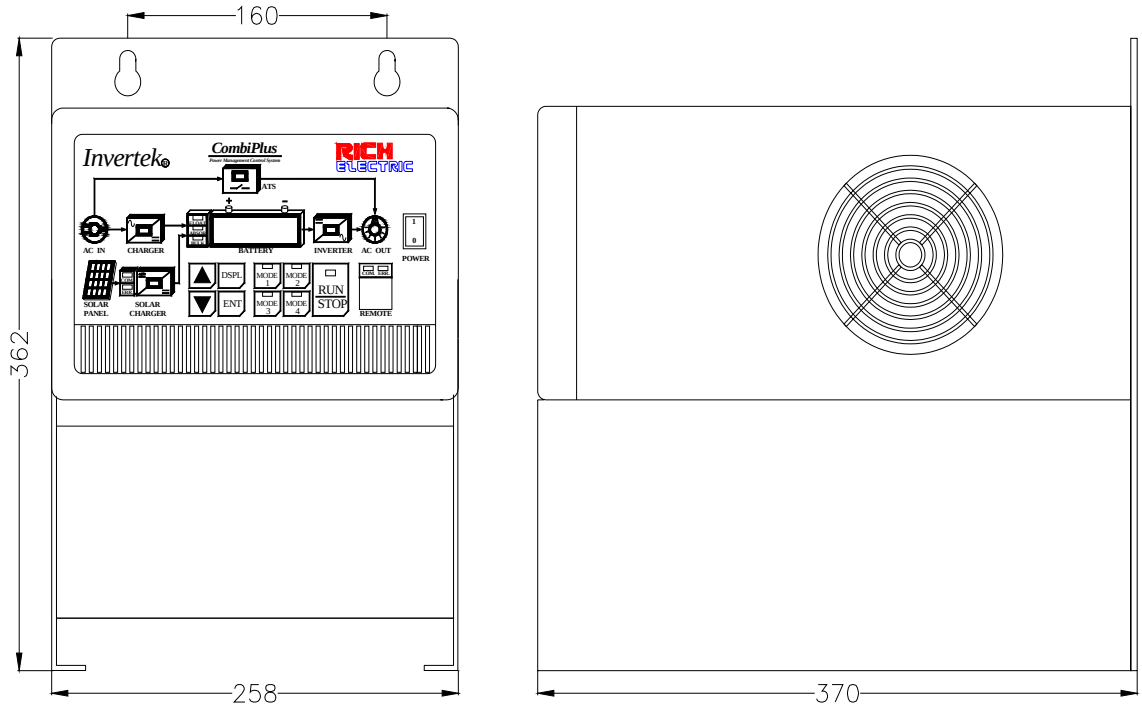

Dimensions 1500watt Model

Installation Holes for Wall Mounting/Vertical CombiPlus 1500W
CP-1500W-12/24

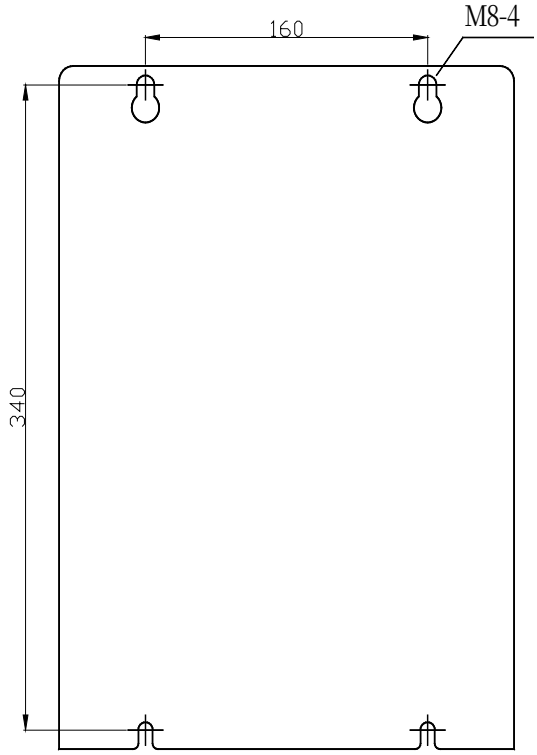

Backside Mounting Holes

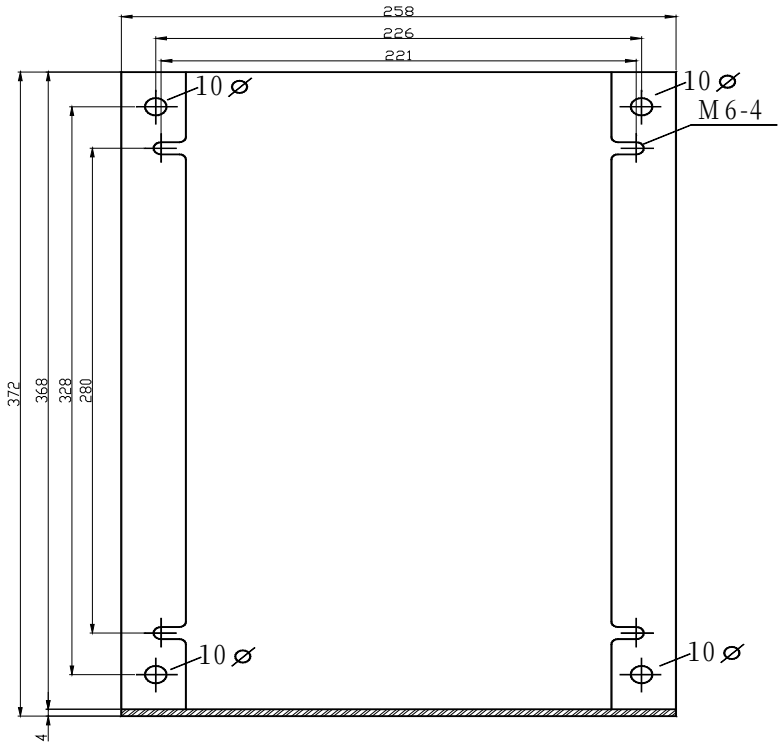

Bottom Mounting Holes

Dimensions 3000watt Model

Dimension for Wall Mounting/Vertical CombiPlus 3000W
CP-3000W-12/24

Unit: mm

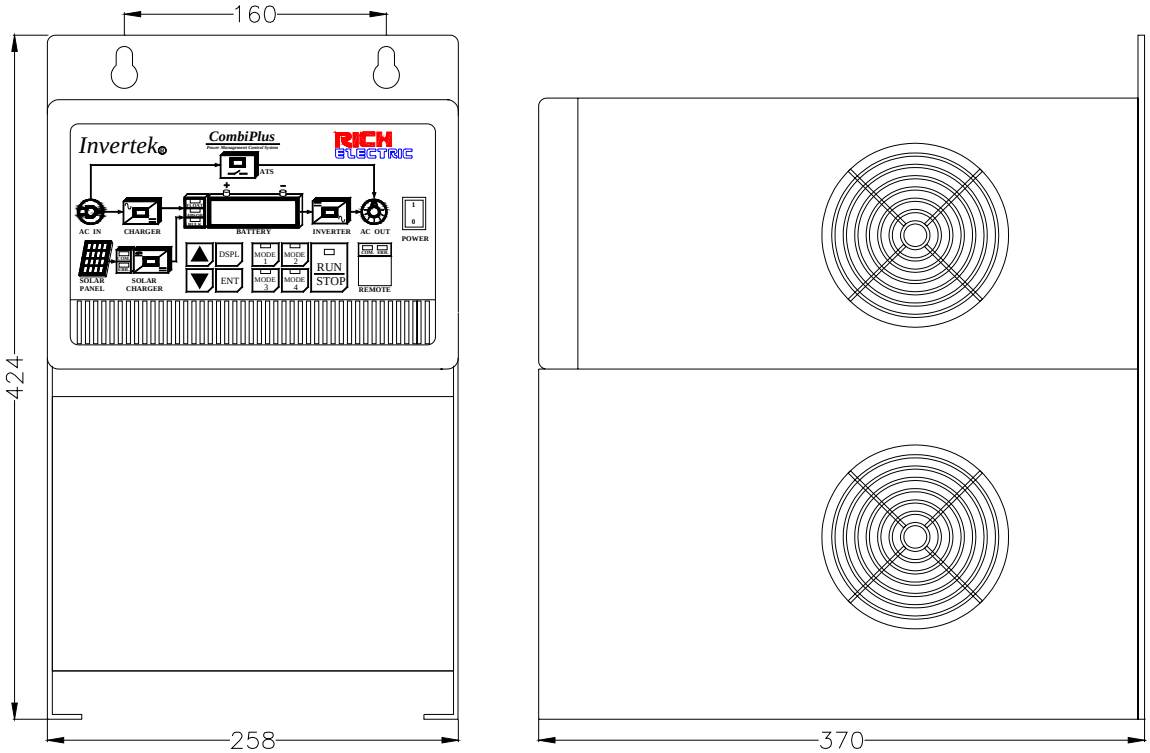

Dimensions 3000watt Model

Installation Holes

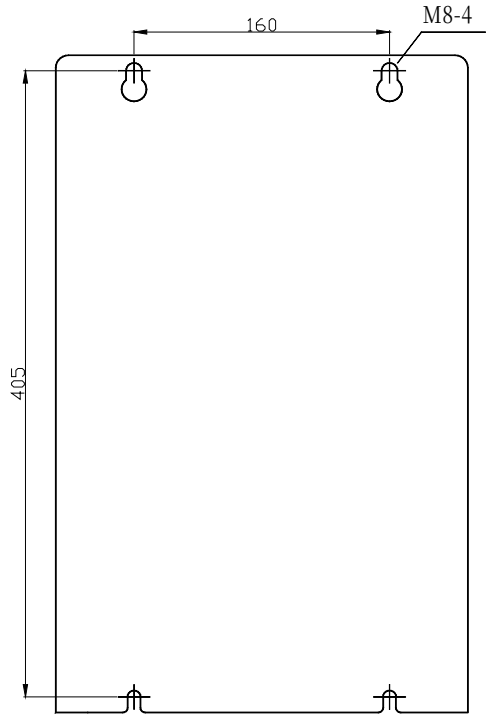

Backside Mounting Holes

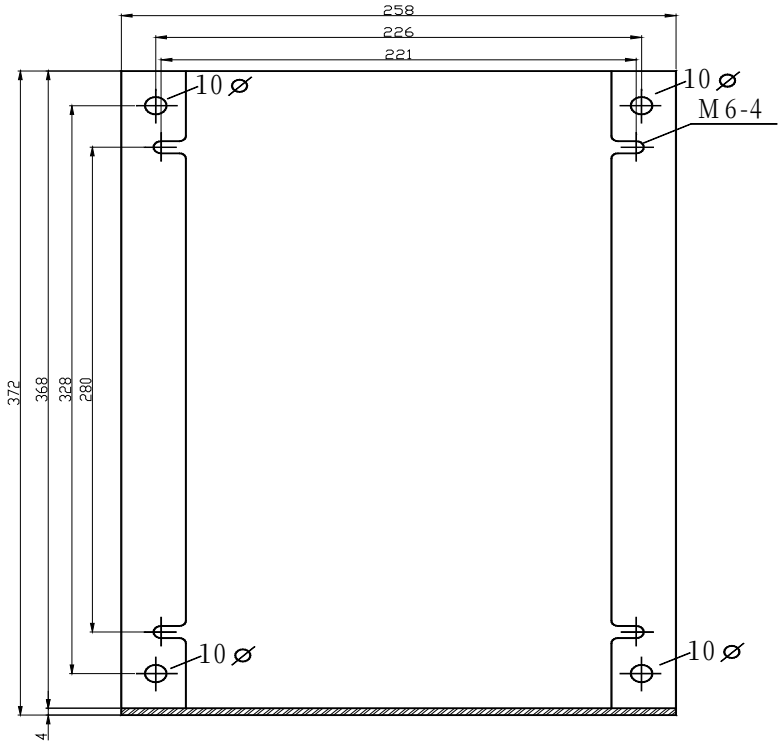

Bottom Mounting Hole

Chapter 1 Installation

This product should be installed by a qualified electrician.

ALL AC WIRING MUST BE CARRIED OUT BY A LICENSED ELECTRICIAN AND MUST CONFORM TO AS3000 WIRING REGULATIONS OR RELEVANT STANDARDS

For other regions, the installation and wiring should comply with relevant National Standards and Practices.

1.1 Box Contents

- CombiPlus
- USER MANUAL
- Quick Reference Guide
- Warranty Card
- Bag Containing connection items,
- Four M8 mounting bolts (including spring washers)
- Four DC terminals and casing

1.2 Location

This product must be installed in a dry and well-ventilated area, as close as possible to batteries. There should be a clear space of at least 20 cm around the appliance for cooling.

Excessively high ambient temperature will result in the following

- Reduced service life
- Reduced charge current
- Reduced peak capacity or shutdown of the inverter

Never position the inverter directly above the batteries.

CombiPlus is suitable for wall mounting. The back and the bottom of the enclosure Has holes for wall mounting purposes.

The front of CombiPlus must remain accessible after installation. Ensure the AC and DC input cables are fitted with fuses and circuit breakers. Try and keep the distance between the product and battery to a minimum in order to minimize cable voltage losses.
The system should always be earthed for lightning and to reduce the risk of accidental short circuits, Earthing the DC Power Wiring is not normally required. If the system is installed in a lightning prone area then protection for the earthing of the DC wiring may be needed.
DC Earth cables must be capable of caring the battery fault current and trip the battery fuse before the cabling fails.

A Battery Fuse or Circuit Breaker is required at all times; Never connect the CombiPlus directly to the battery. The fuse or Circuit breaker should be connected as close to the battery as possible.
If the batteries are not earthed then protection should be provide on both the Positive and Negative sides of the battery.

NOTE: The DC cabling should always be kept separated from any of the AC cabling.

1.3 Requirements

- Screwdrivers for removing the lower-front panel and connecting AC loads.
- 2x battery cables (maximum length 6 meters) ensure battery cables are correctly sized.
- Insulated box spanner (13 mm) for securing the DC terminal nuts.
- Twin and Earth power cable for AC cabling.

1.4 Connection of Battery Cables

Ensure you have enough battery capacity to be able to operate your CombiPlus to its full capacity.

Model / Item	CP-1500-12X	CP-1500-24X	CP-3000-12X	CP-3000-24X
Minimum Battery Capacity (Ah)	200Ah	100Ah	400Ah	200Ah
Recommended Cable Size (mm^2)	53.5 mm^2 0 AWG	33.6 mm^2 2 AWG	85 mm^2 000 AWG	53.5 mm^2 0 AWG

NOTE: Consult your battery manufacturer for correct battery sizing for your application, Battery cable sizes are based on recommended cable length of 2 meters. Longer cable lengths will require large cable sizes.

Always use an insulated box spanner in order to avoid shorting the battery.
Never short the battery cables!

- Remove the four screws at the lower-front panel of the enclosure and remove the panel.
- Connect the battery cable: the + (red) on the right and the – (black) on the left.
- Don't reverse the (+) and (-) of the battery. This may cause internal damage.
- Secure battery nuts tightly in order to reduce the contact resistance as much as possible.

For more information on battery bank enclosures and installations please refer to AUS/NZ standards AS 2676, AS4509, AS3010 & AS4086.
For other regions, the installation and wiring should comply with relevant National Standards and Practices.

1.5 Connection of AC Cabling

Ensure the CombiPlus is grounded for safety.
The main earth screw has been fitted at the bottom left side of the enclosure.
The AC terminal connection is located in lower-front panel of the enclosure:
The AC Supply (AC IN) cable must be connected to AC IN terminals,
Use a Twin and Earth power cable; refer to table below for correct AC cable sizes.

The AC output terminal connection is labeled “AC OUT”. The terminal points are indicated clearly. From left to right: “G” (earth), “N” (neutral), and “L” (phase).

The AC input terminal connection is labeled “AC IN”, The terminal points are indicated clearly: From left to right “L” (phase), “N” (neutral), and “G” (earth).

External fuses or circuit breakers must be installed.
The AC input circuit breaker built in to the CombiPlus is designed to protect the internal wiring inside the unit only. Faults on sub circuits will not normally trip this breaker.
All External AC wiring must be protected with suitably rated external circuit breakers and RCD Earth Leakage protection.
For AC input protection we recommend the use of a Circuit Breaker (MCB).
The electricity which is switched through to the Inverters output (AC OUT) is NOT fused.
External fuses or circuit breakers must be installed. For correct sizing see table below.
AC output Circuit breakers and Earth Leakage protection is recommend for
Protection of the AC output from the Inverter.

CombiPlus®	Inverter AC Input		
	MCB/RCD	MIN AC Cable Size single Twin-core and earth	
Model	MAX Circuit Breaker Current	Enclosed conduit	Unenclosed free air
1500watt	16Amp	2.5mm	1.5mm
3000watt	32Amp	6mm	4mm
6000watt	63Amp	16mm	10mm

CombiPlus®	Inverter AC Output		
	MCB/RCD	MIN AC Cable Size single Twin-core and earth	
Model	MAX Circuit Breaker Current	Enclosed conduit	Unenclosed free air
1500watt	25Amp	4mm	2.5mm
3000watt	50Amp	16mm	10mm
6000watt	100Amp	35mm	25mm

THE OUTPUT VOLTAGE FROM THE INVERTER IS LETHAL

For your safety ensure that all installations meet and comply with the relevant requirements of AS3000 wiring standards and AC wiring is installed by a Licensed Electrical Contractor.

MAKE SURE THE COMBIPLUS IS SWITCHED OFF AND DISCONECTED FROM ALL AC AND DC SUPPLIES BEFORE WORKING ON THE SYSTEM!

1.6 AC Cabling Schematic Layout (Multiple Circuit AC Output)

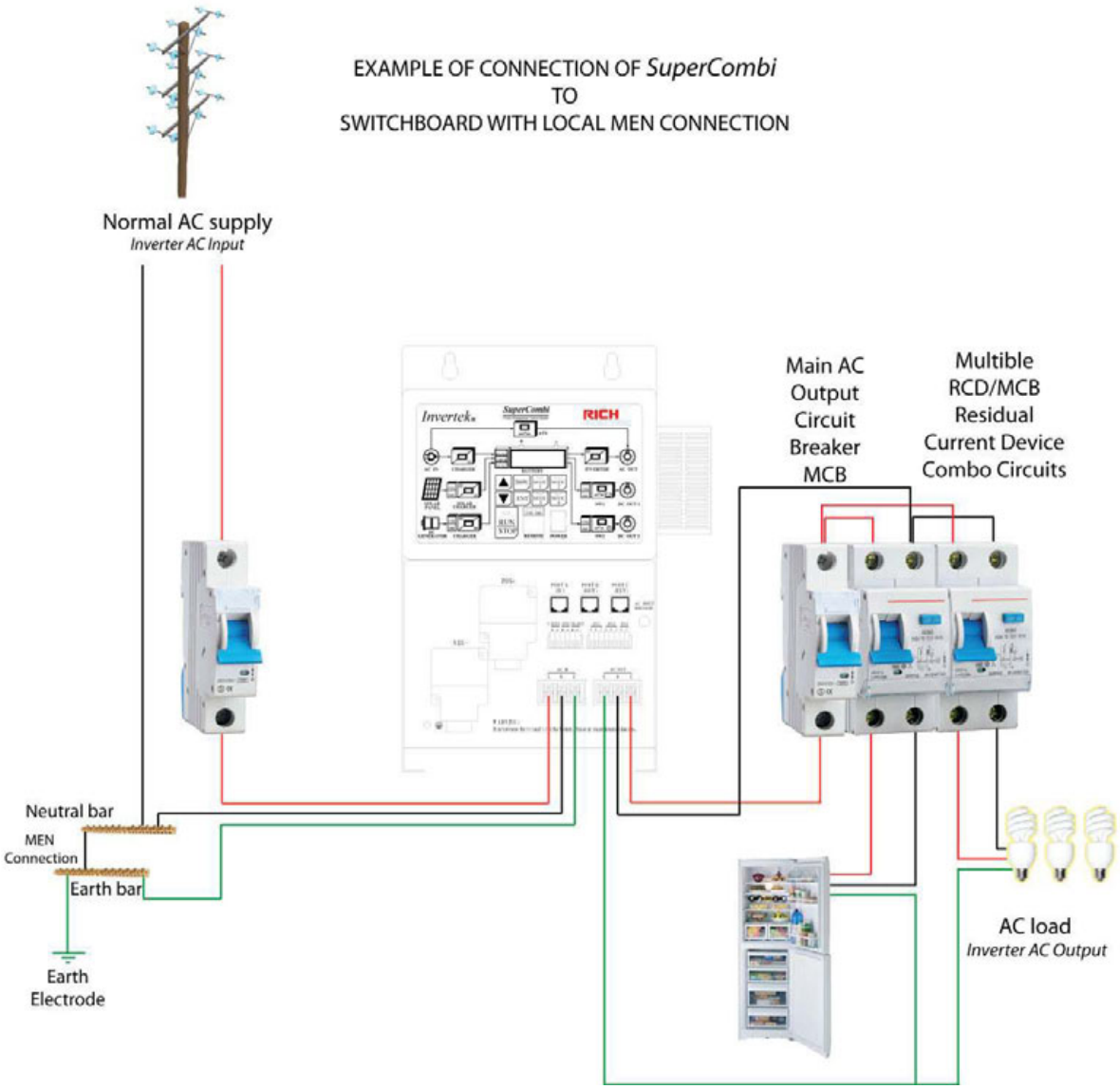

ALL AC WIRING MUST BE CARRIED OUT BY A LICENSED ELECTRICIAN AND MUST CONFORM TO AS3000 WIRING REGULATIONS OR RELEVANT STANDARDS

For other regions, the installation and wiring should comply with relevant National standards and practices.

Invertek
Pure Sine Wave
Interactive Inverter Charger

1.7 AC Cabling Schematic Layout (Single Circuit AC Output)

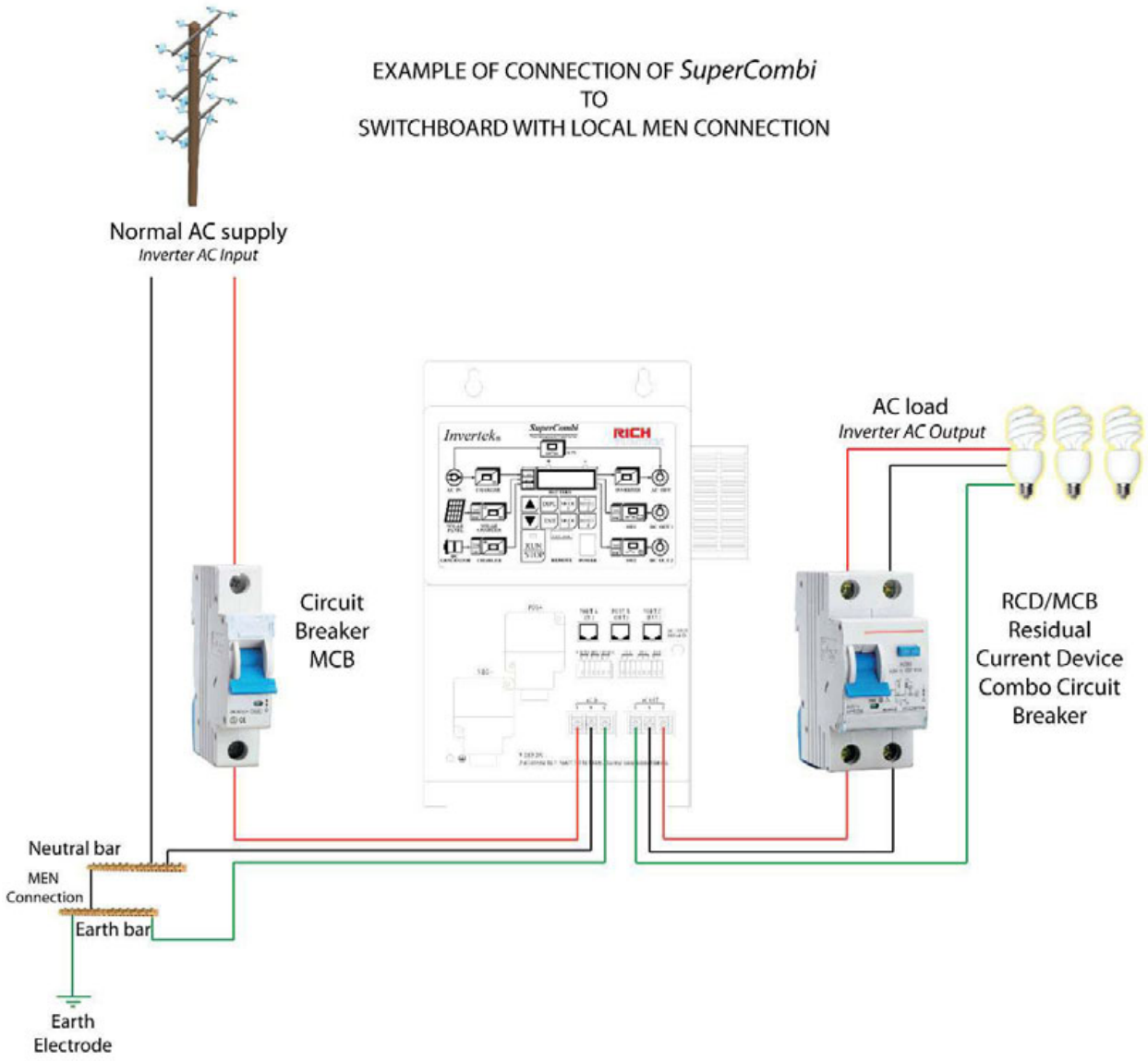

ALL AC WIRING MUST BE CARRIED OUT BY A LICENSED ELECTRICIAN AND MUST CONFORM TO AS3000 WIRING REGULATIONS OR RELEVANT STANDARDS

For other regions, the installation and wiring should comply with relevant National standards and practices.

1.8 Second Battery

The "CombiPlus" has a secondary output connection for charging a starter battery.
For connection, see page 28

1.9 Voltage Sense

If you have long battery cable runs we recommend you use the voltage sense input. By connecting wires of at least 0.75 mm^2 from the battery to the VS input the CombiPlus can monitor the correct battery voltage. For connection, see page 28.

1.10 Battery Temperature Sensor (BTS-3)

The battery temperature sensor (optional) is recommended for correct temperature compensated battery charging and battery over temperature protection, see page 28.
The sensor is insulated and must be mounted on the batteries minus pole.

1.11 Three Sets of Auxiliary Relay (RY1, RY2, RY3) Output

The "CombiPlus" provides 3 sets of Auxiliary Relays for users to connect to other appliances or to output the alarm signals. 3 sets of relays can be programmed for respective function.
(E Group Constants) and can be practically applied which is one of the greatest features.

1.12 Parallel Connection

The CombiPlus can be connected in parallel using multiple identical units, please see page 32. The batteries must be connected in accordance with page 30 & 31.This requires a CP-PX, parallel box, to be purchased separately.

Note:

- We recommended No more than 5 units should be connected in parallel.
- Use the same model CombiPlus when connecting in parallel.
- Make sure you have enough battery capacity to support the number of CombiPlus Units.
- Install the CombiPlus units next to each other making sure there is adequate clearance for ventilation of at least 20 cm. For better ventilation, please install the fan cover (optional).
- The Battery Temperature Sensor (BTS), voltage sensor (V-SENS) and remote control panel (RCP) must be connected to Master.
- The cables for each CombiPlus must be equal in length (AC and DC)

1.13-Phase Operation

The CombiPlus can be configured for use in a 2 or 3-phase applications, see page 33 & 34. This requires a CP-3PX, 3-Phase box, Purchased separately. The batteries must be connected in accordance with page 30 & 31.

Note:

- We recommended No more than 5 units should be connected in parallel.
- Use the same model CombiPlus.
- Make sure you have enough battery capacity to support all of the CombiPlus Units.
- Install the CombiPlus units next to each other making sure there is adequate clearance for ventilation of at least 20 cm. For better ventilation, please install the fan cover (optional).
- The Battery Temperature Sensor (BTS), voltage sensor (V-SENS) and remote control panel (RCP) must be connected to Master.
- The cables for each CombiPlus must be equal in length (AC and DC)

1.14 MEN (Main Earth Neutral) Grounding

When the AC input voltage is not present the CombiPlus will switch the neutral of “AC OUT” and connect it to the Earth (Ground) by means of a relay. This function can be disabled by constant B2-07 (B2-07=0 Disconnect)

1.15 Remote Control Panel (RCP-4)

The CombiPlus can be operated remotely from remote port with the aid of a remote control panel. For connection of a remote control panel, see page 28.

Note: The display panel and operation flow of the remote control panel is exactly the same as the upper-front display panel.

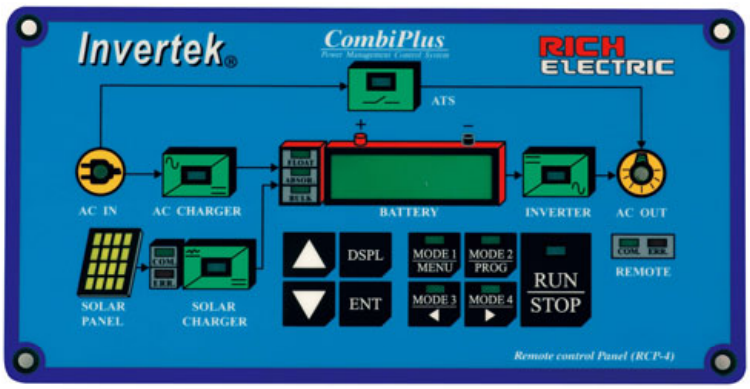

Invertek
Pure Sine Wave
Interactive Inverter Charger

1.16 Ventilation (Standard Single Unit)

When the unit is installed in an
Environment with good ventilation,
The fan cover is not needed.

1.17 Ventilation (Optional Fan Cover Application) "Single Unit Installed"

When the unit is installed nearby wall side which
Blocks the airflow coming to the unit,
The fan cover is needed.
The CombiPlus also supports connection of an
External fan. This is very useful when the
CombiPlus is installed in a cabinet or
in Recreational Vehicle / Boat.

Fan ON: E1-08, See page 92.
Fan OFF: E2-08, See page 95.

Aux-Relay 1 can be used to turn ON, when the internal fan switches on.
E1-08: Fan ON for ? sec used together with the E2-08: Fan OFF for ? sec setting to control an external fan.

1.18 Multiple and 3-Phase Application

When there is more than one CombiPlus in parallel connection or 3-phase connection, the optional accessory, fan covers, are highly recommended to be installed for each CombiPlus to have better ventilation in cooling down the temperature.

Chapter 2 Wiring Connections

2.1 Lower-Front Panel Connection for Wall-Mounting/Vertical CombiPlus

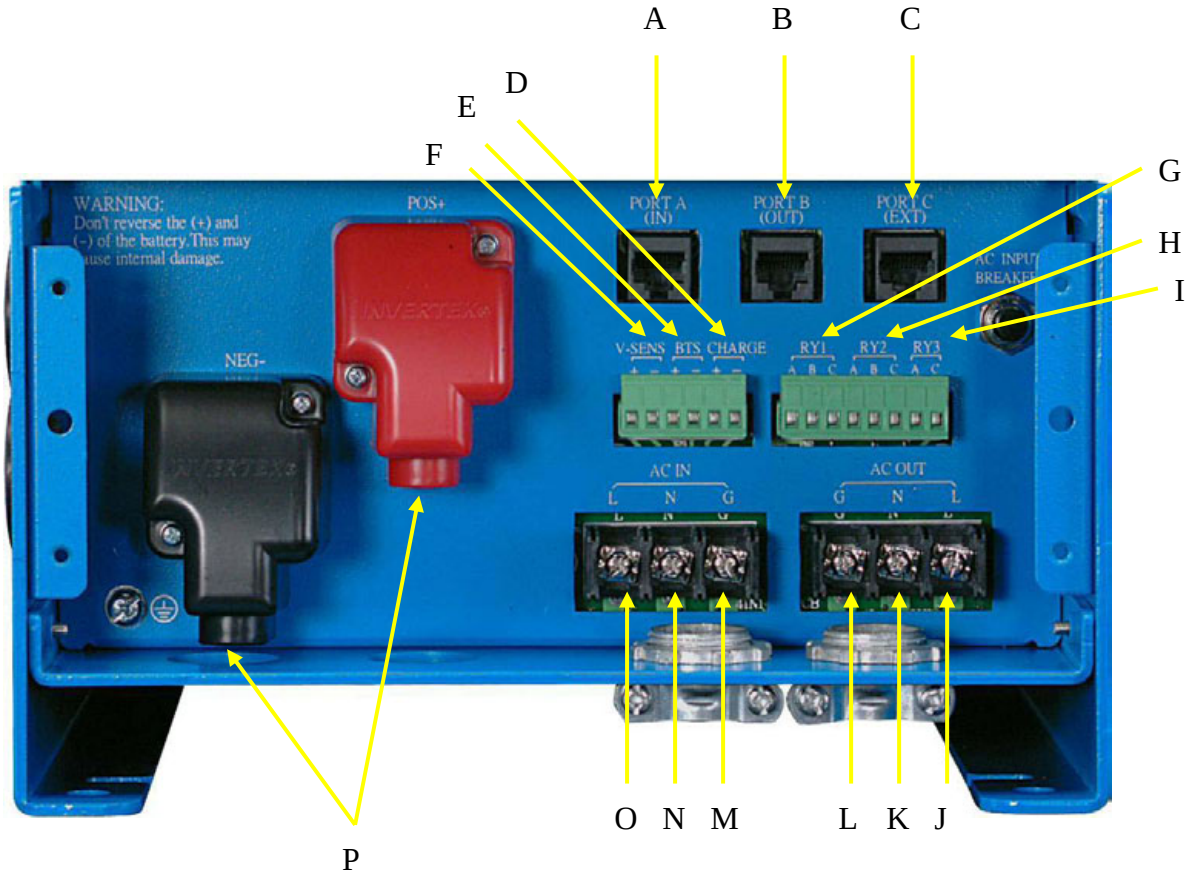

Connections / Lower- Front side

A	PORT A (IN)	Connections for parallel power/3-phase power
B	PORT B (OUT)	Connections for parallel power/3-phase power
C	PORT C (EXT)	Connections for external solar/wind modules
D	CHARGE	Connecting terminal for starting battery of 4A
E	BTS (Battery temp. sensor)	Connecting terminal for temperature sensor.
F	Vsens +/- (Battery Voltage Sense)	Connecting terminal for Battery Voltage feedback
G	RY1 contact	Connecting terminal for auxiliary contact 1.
H	RY2 contact	Connecting terminal for auxiliary contact 2.
I	RY3 contact	Connecting terminal for auxiliary contact 3.
J	AC OUT L	Connecting terminal for AC output Line
K	AC OUT N	Connecting terminal for AC output Neutral
L	AC OUT G	Connecting terminal for AC output Ground
M	AC IN G	Connecting terminal for AC input Ground
N	AC IN N	Connecting terminal for AC input Neutral
O	AC IN L	Connecting terminal for AC input Line
P	Battery POS+/ NEG-	Battery cables.

Battery Connection:
2.2 Star Connection Schematic

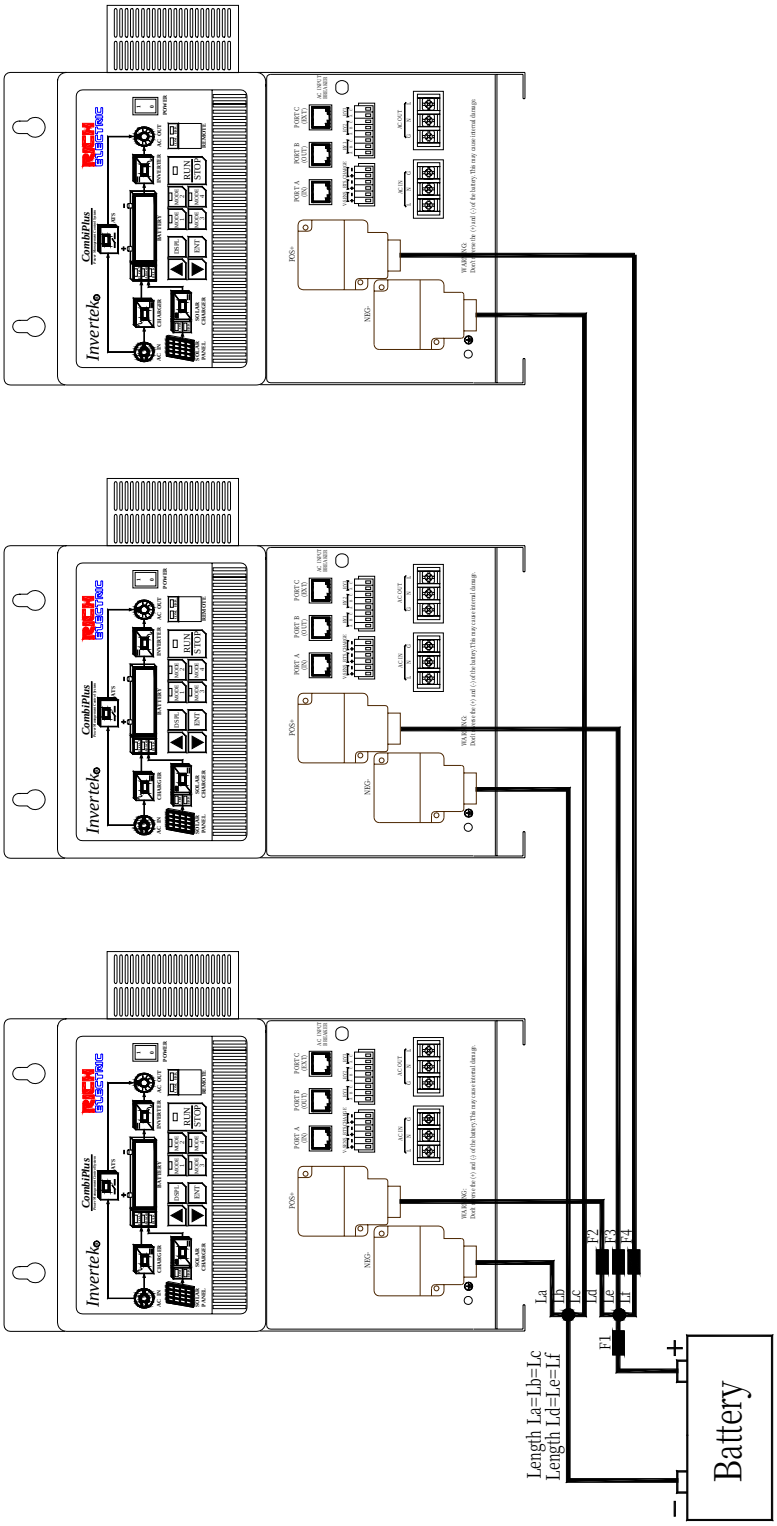

2.3 Battery : Rail Connection Schematic

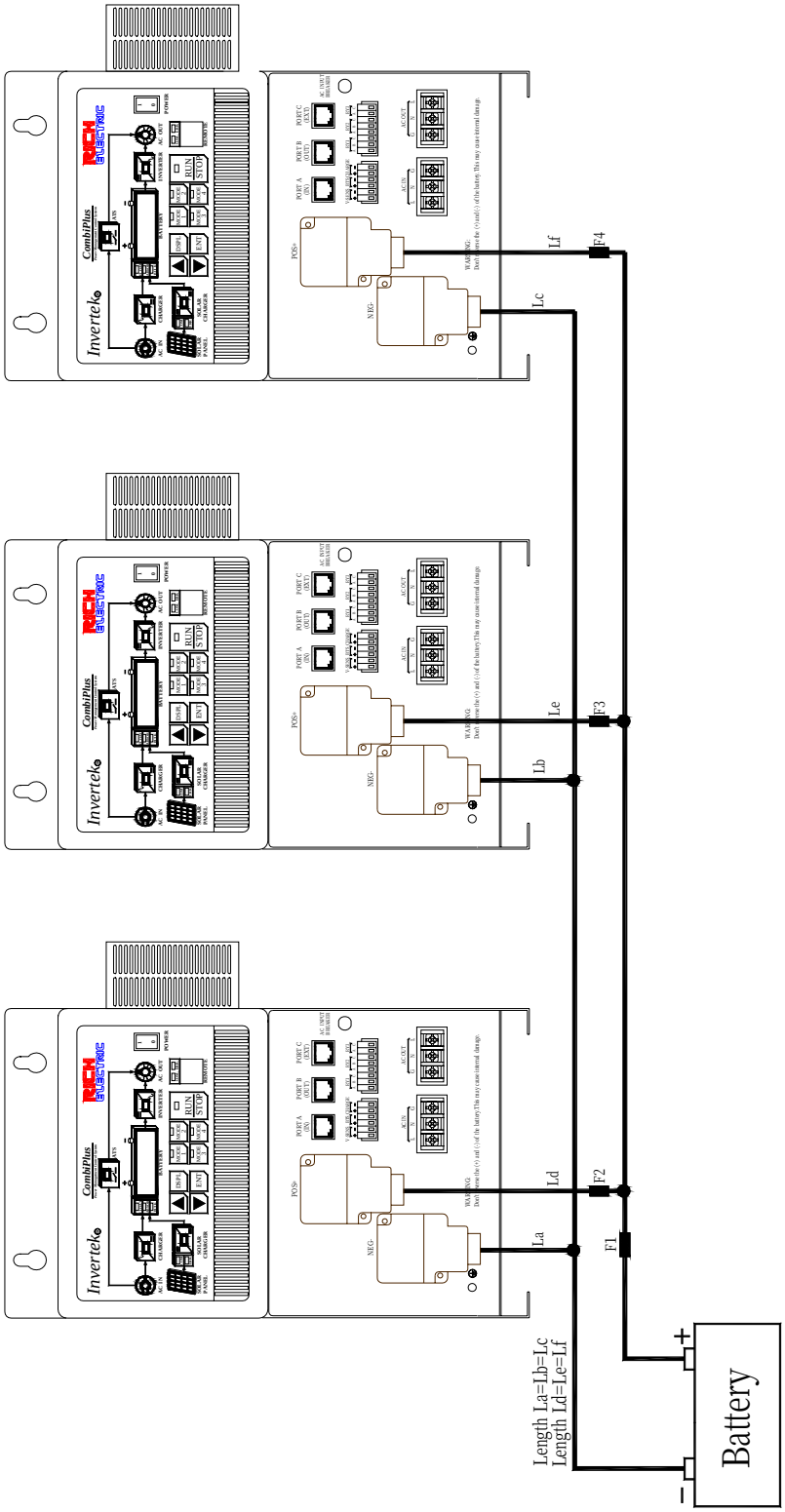

2.4 AC Parallel Connection Schematic

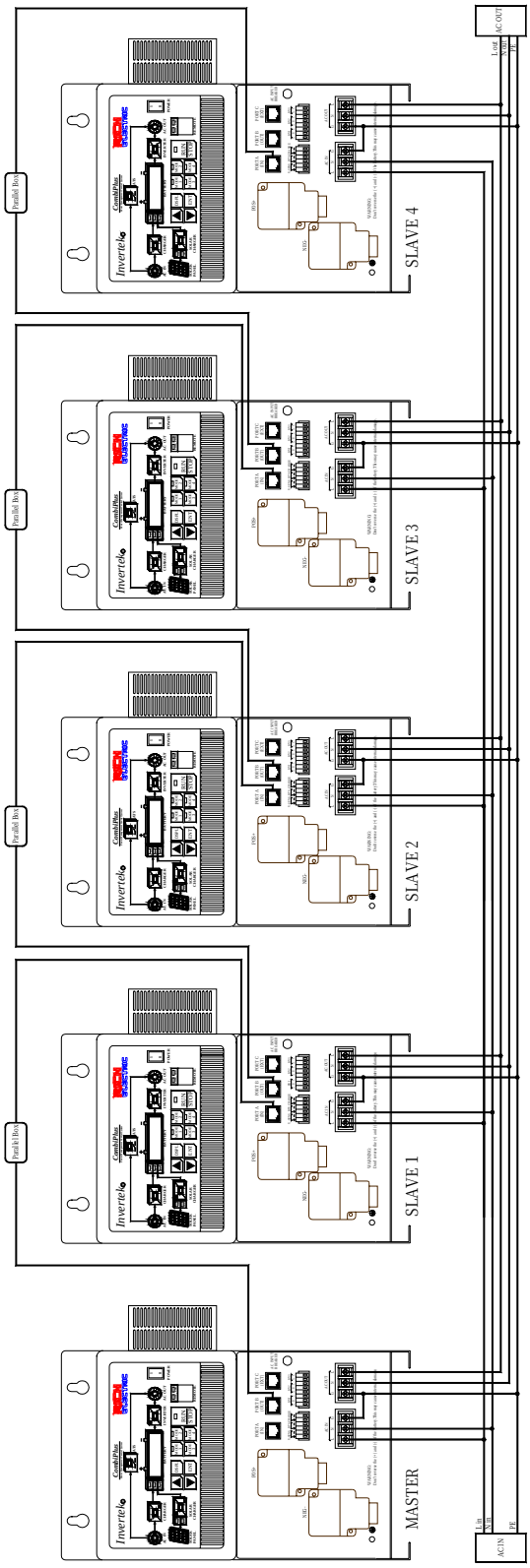

For the MASTER, constant B2-05 and B3-01 must be set.
For the SLAVE 1, 2, 3 and 4, constant settings are not required.

2.5 AC 3-Phase Connection Schematic

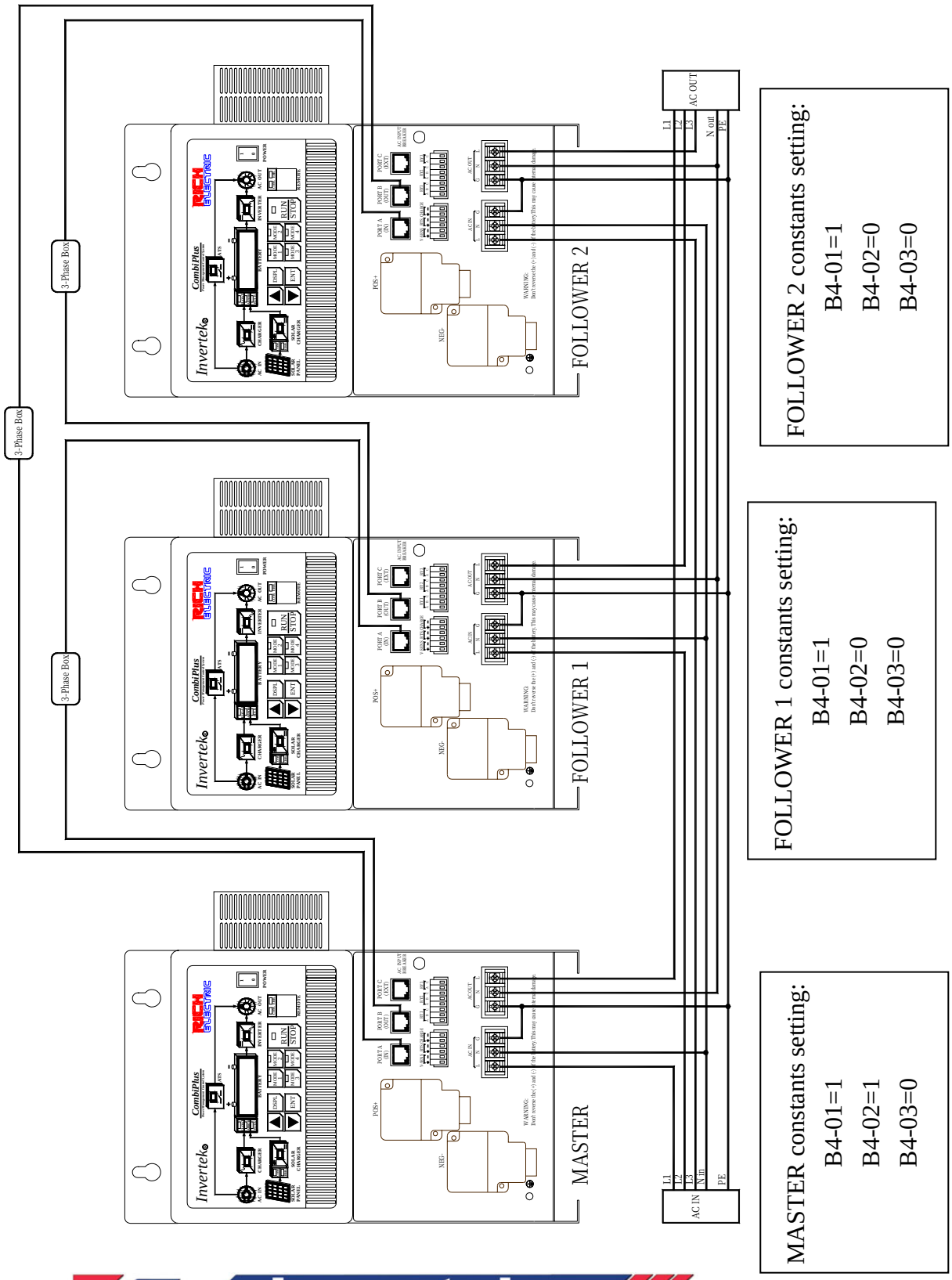

2.6 AC 3-Phase System 15 Modules

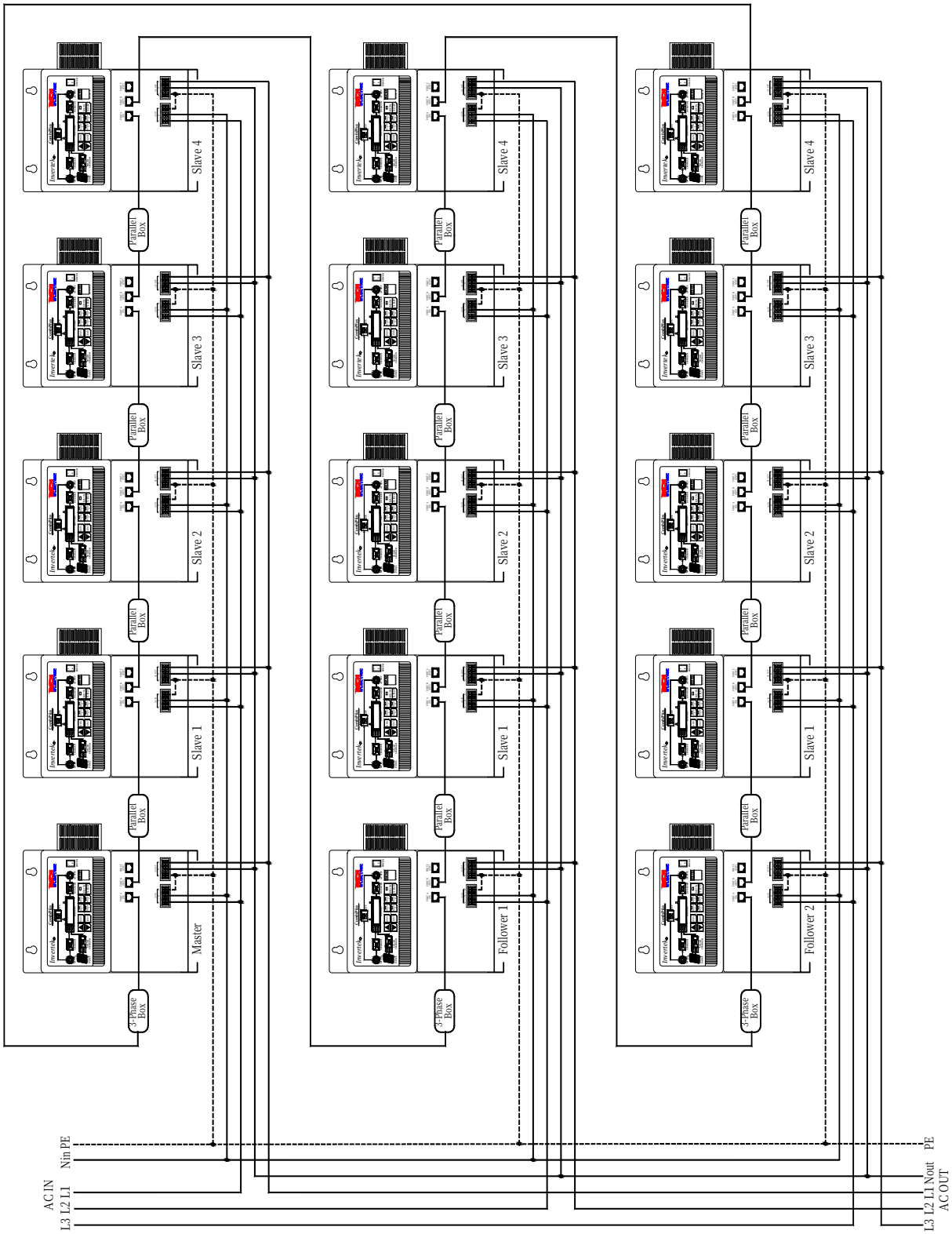

For the settings of MASTER, FOLLOWERS and SLAVES, see 3.5 and 3.6

Chapter 3 Battery Types

CAUTION: Never attempt to charge a primary (non-rechargeable) battery.
All charging voltages noted below will be for 12V batteries at 25°C.

3.1 Sealed Batteries

The general class of sealed batteries suitable for solar inverter systems are called VRLA (Valve Regulated Lead-Acid) batteries. The two main characteristics of VRLA batteries are electrolyte immobilization and oxygen recombination. As the battery recharges, gassing is limited and is recombined to minimize the loss of water.
The two types of VRLA batteries most often used in solar are AGM and Gel.

3.2 AGM:

Absorbed Glass Mat batteries are still considered to be a "wet cell" because the electrolyte is retained in fiberglass mats between the plates. Some newer AGM battery designs recommend constant voltage charging to 2.45 volts/cell (14.7V). For cycling applications, charging to 14.4V or 14.5V is often recommended. Typical float voltage of 13.5~13.8v

AGM batteries are commonly replacing the older style flooded (Wet) type battery. AGM batteries are designed for different applications can vary depending on their type. These can be suited to high or low discharge applications with good daily cycling life. Some manufactures offer over 1000+ cycles to 100% discharge and with service life of up to 14 years. These batteries should not be equalized unless stated from the battery manufacture. Since gassing could be vented causing the battery to dry out.
There is also a potential for thermal runaway if the battery gets too hot, and this will destroy the battery. AGM batteries are affected by heat, and can lose 50% of their service life for every 8°C (15°F) over 25°C (77°F).

It is very important not to exceed the gas recombination capabilities of the AGM. The optimum charging temperature range is from 5 to 35°C (40 to 95°F).

3.3 Gel:

Gel batteries have characteristics similar to AGM, except a silica additive immobilizes the electrolyte to prevent leakage from the case. And like AGM, it is important to never exceed the manufacturer's maximum charging voltages. Typically, a gel battery is recharged in cycling applications from 14.1V to 14.4V. Typical float voltage of 13.5~13.8v. The gel design is very sensitive to overcharging.

For both AGM and Gel batteries, the goal is for 100% recombination of gasses so that no water is lost from the battery. True equalizations are never done, but a small boost charge may be needed to balance the individual cell voltages.

Other Sealed Batteries:

Automotive and "maintenance-free" batteries are also sealed. However, these are not discussed here because they have very poor lifetimes in solar / inverter cycling applications.

NOTE: Consult the battery manufacturer for the recommended solar charging settings for the battery being used.

3.4 Flooded Batteries

Flooded (vented) batteries have been commonly used for many cycling solar inverter systems over the years.

The advantages of flooded batteries are normally very cost effective. Flooded batteries can offer good service life for deep cycle applications.

In cycling applications, flooded batteries benefit from vigorous charging and equalization cycles with significant gassing. Without this gassing, the heavier electrolyte will sink to the bottom of the cell and lead to stratification. This is especially true with tall cells. Hydrocaps can be used to limit the gassing water loss. General monthly maintenance is normally required for flooded batteries to maintain their water levels.

Note that a 4% mixture of hydrogen in air is explosive if ignited. Make certain the battery area is well ventilated.

Special enclosure requirements are needed for flooded batteries. For more information on battery bank enclosures and installations please refer to AUS/NZ standards AS 2676 & AS4086. Typically, a gel battery is recharged in cycling applications from 14.6V to 14.8V. Float voltage are normally around 13.2~13.8v. Typical equalization voltages for flooded batteries are from 15.3 volts to 16 volts. However, a solar system is limited to what the solar array can provide. If the equalization voltage is too high, the array I-V curve may go over the "knee" and sharply reduce the charging current.

3.5 Lead-Calcium:

Calcium batteries charge at lower voltages (14.2 to 14.4 typically) and have strong advantages in constant voltage or float applications. Water loss can be only 1/10th of antimony cells. However, calcium plates are not as suitable for cycling applications.

3.6 Lead-Selenium:

These batteries are similar to calcium with low internal losses and very low water consumption throughout their life. Selenium plates also have poor cycling life.

3.7 Lead-Antimony:

Antimony cells are rugged and provide long service life with deep discharge capability. However, these batteries self-discharge much faster and the self discharging increases up to five times the initial rate as the battery ages. Charging the antimony battery is typically from 14.4V to 15.0V, with a 120% equalization overcharge. While the water loss is low when the battery is new, it will increase by five times over the life of the battery.

There are also combinations of plate chemistries that offer beneficial tradeoffs. For example, low antimony and selenium plates can offer fairly good cycling performance, long life, and reduced watering needs.

NOTE: Consult the battery manufacturer for the recommended batter charging settings for the battery being used.

Chapter 4 Operation

4.1 Front Panel Display

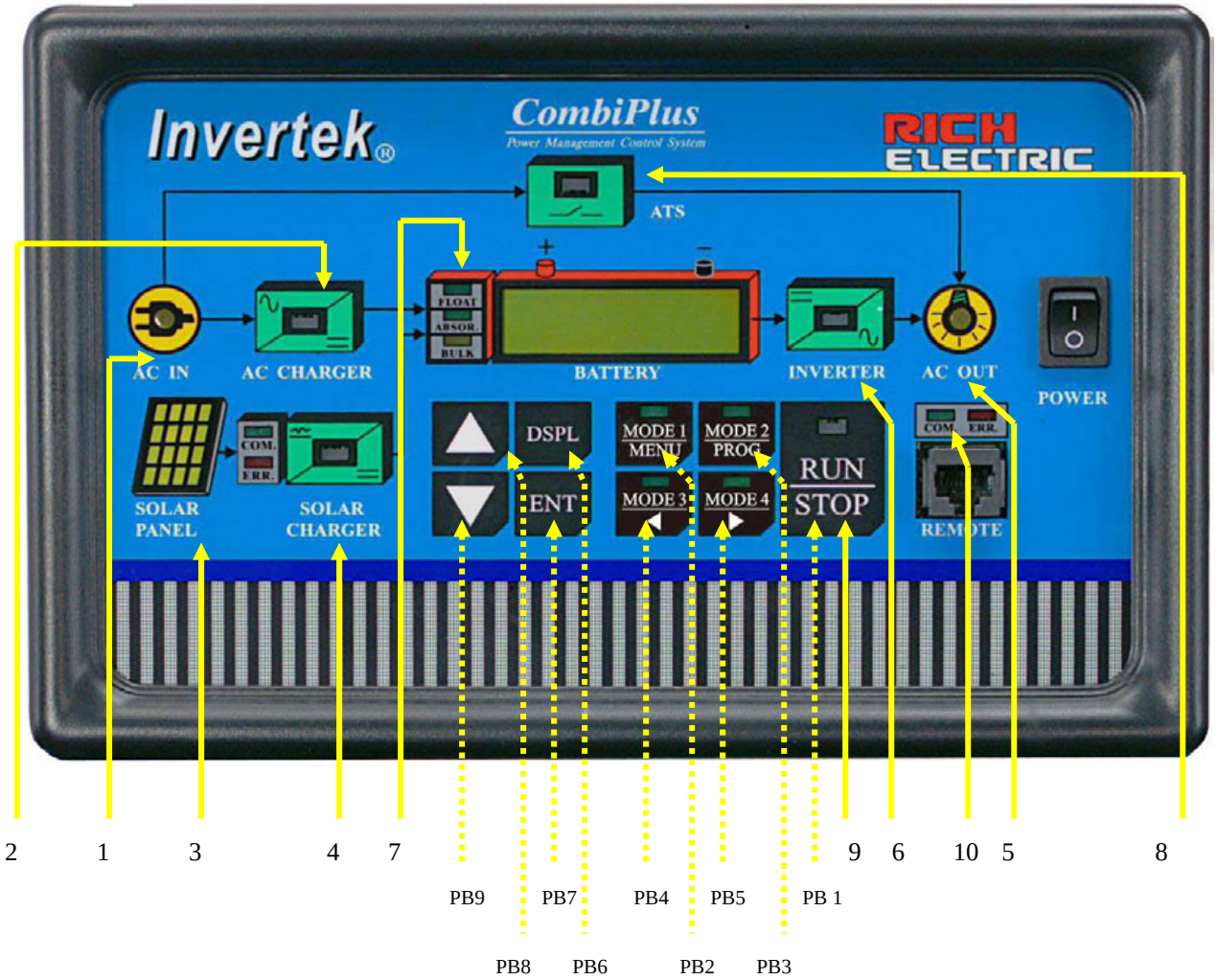

The **POWER** "rocker" switch is the Master ON / OFF Switch. This switch in the "OFF" position will terminate all functions of the Combi. This switch in the "ON" position will by default resume functions previously running when the POWER switch was turned off.

The **RUN/STOP** button changes the Combi between Standby and Operation Mode.

NOTE: The AC Output is turned OFF when the inverter is Switched OFF at the Master Power Switch or in Standby mode. The AC Bypass (ATS) is also disabled.

LED Indicators

LED	Name	LED ON	LED OFF
1	AC IN	1. Input voltage normal, and position > ”transfer Voltage Level” (150VAC~240VAC) 2. Input voltage frequency range in between(45~65Hz) 3. Flashing: Input voltage or frequency is outside settings.	No input power
2	AC CHARGER	Green: AC Battery charger is working.	
3	SOLAR PANEL	Solar module is delivering energy.	1. Solar module not connected 2. Day or Night / (cloudy day)
4	SOLAR CHARGER	Solar module is charging the batteries	No external solar charger is connected.
5	AC OUT	There is voltage at the “AC OUT” terminal.	
6	INVERTER	Green: Inverter is working. Green Flashing: Inverter is in Support mode. (Mains AC power plus the Inverter power is being used).	
7	BATTERY	FLOAT or ABSOR. Or BULK Charge state of battery.	
8	ATS	Green : ATS switch is active AC IN voltage is being sent directly to AC OUT terminal Flashing: AC input is not stable.	
9	RUN/STOP	Green: CombiPlus® turn on. Red: CombiPlus® turn off / standby.	
		NOTE: Green Blink : Auto-Restart is in use	
10	COM./ERR.	Remote control port in communication/in error	

4.2 Front Panel Button Operations

Front Panel: Button Operations

Push buttons	Name	Description	
PB1	RUN/STOP	CombiPlus® RUN/STOP key	
PB2	MODE 1 MENU	AC Power as Priority Support Function Key to return to Main Menu "Operation"	Before changing from one mode to another, it has to stop running and be in STOP mode.
PB3	MODE 2 PROG	AC Generator Support with Dynamic Power Shifting Function Key to return to Main Menu "Programming"	
PB4	MODE 3 ◀	Renewable Energy with Power Support Function Key to move Cursor to the left digit at Parameter Edit.	
PB5	MODE 4 ▶	Renewable Energy with AC Charger Backup Support Function Key to move Cursor to the right digit at Parameter Edit	

PB6	DSPL	Multi-display select key	
PB7	ENTER	Data write-in key	
PB8	UP（△）	△ Increment key	Press △ and ▽ keys at the same time to enable the cursor to move to the left digit from the current digit.
PB9	DOWN （▽）	▽Decrement key	

Four Control Modes Applications:

MODE 1: AC Power as has Priority to Support the AC Load.

MODE 2: AC Generator has Priority to Support the AC Load with Dynamic Power Shifting.

MODE 3: Renewable Energy has Priority to Charge the batteries.
The Combi Inverter has Priority to Support the AC load with AC Power Support.

MODE 4: Renewable Energy has Priority to Charge the batteries with AC Charger Support.
The Combi Inverter has Priority to Support the AC load with AC Power Support.

Note:

1. When pressing RUN/STOP key, you must hold the key for at least 2 seconds (initial setting) to activate the RUN or STOP function. This is to avoid any accidental pressing of the RUN/STOP key. This time can be adjusted, See RUN/STOP Key Hold Time (O2-07) menu. Refer to page 45.
2. When changing between any of the four modes you must STOP the CombiPlus® and then press the desired mode key. When pressing MODE 1, MODE 2, MODE 3 or MODE 4 key, you must hold the key for at least 5 seconds (initial setting) to activate the mode change.
   This is to avoid any accidental pressing on the mode keys.
   This time can be adjusted, See second MODE Key Hold Time (O2-06) menu. Refer page 45.
3. The beep sound when pressing keys can be enabled or disabled, See Key Pressed Beep Select (O2-01) menu. Refer page 44.
4. When the front panel is not in use it will go to sleep after a set period of time. (O1-02),
   Once any key is pressed, the front panel display will illuminate and the LCD monitor will resume display. This time can be adjusted, See LCD Display Time Set (02-09) menu.
   Refer to page 45.
   Note: When the front panel goes to sleep, the LCD Display and LED Indicators are not active but RUN/STOP indicator remains active.
5. Press △ key to increase the setting value and ▽ key to decrease the setting value.
   Press △ and ▽ keys at the same time to enable the cursor to move to the left digit from the current digit. For example, if the current digit stays in decimal, press △ and ▽ at the same time for the digit to move to centesimal.
6. Press

key for 1 second to return to Main Menu “Operation” immediately.
7. Press

key for 1 second to return to Main Menu “Programming” immediately.
8. Press

key to move cursor to the left (one digit)
9. Press

key to move cursor to the right (one digit)

Main Menu

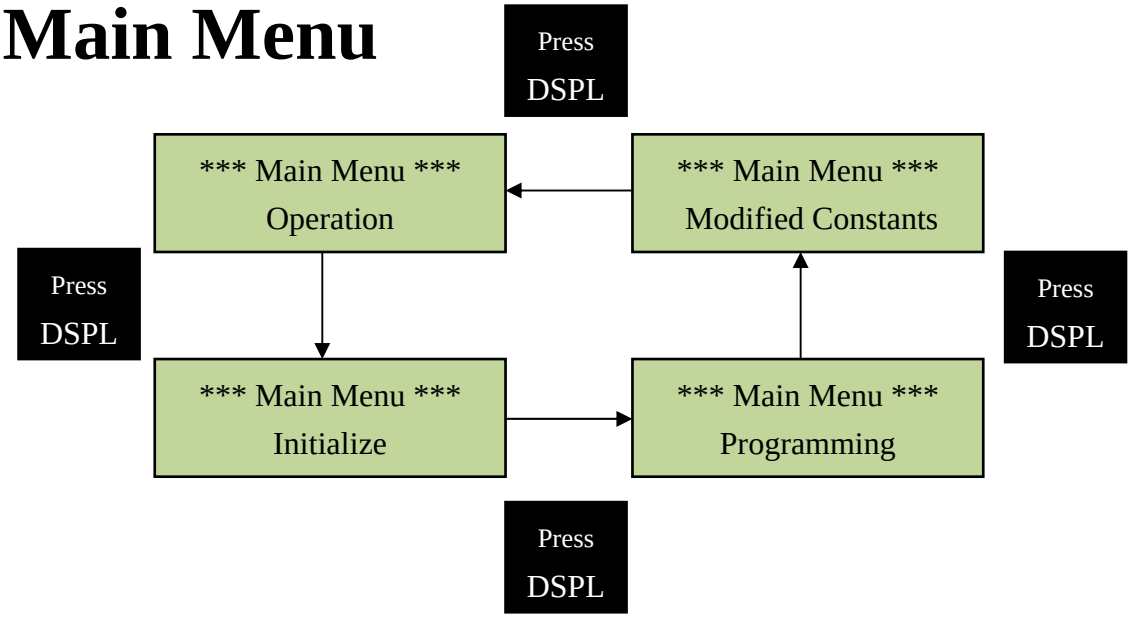

Note: *After the set time period (01-02: Key Idle Detect Time) the system will exit any menu screens and return to the standby display (01-01: Power ON LCD Monitor Select).*

4.3 Main Menu

There are four options in the Main Menu of the "CombiPlus®" and they are "**Operation**", "**Initialize**", "**Programming**" and "**Modified Constants**".

Function	Content
Operation	"CombiPlus®" can monitor AC IN voltage and current, AC OUT voltage and current, battery voltage, battery current and ripple voltage in charging and discharging battery and other extension modules status. This is U (Monitor Group) constants.
Initialize	Operation Condition Setting Group A (Initialize) Group: Multi-language setting, constants initialization setting and constants modification allowed/prohibited setting.
Programming	Constant groups to program (modify) all the constants: B (General) Group, C (INVERTER) Group, D (AC CHARGER) Group, E (Aux-relay) Group F (Solar charger) Group and O (Operator) Group
Modified Constants	Operating the read-out and modification of the constants group setting which are different from initial setting. Users can program and modify constants

Note: On any Menu screen, pressing "DSPL" key will return you to the previous Menu.

4.4 Main Menu : Programming "Operator"

Main Menu: Programming

"Operator"

Monitor Select…….

O1-01: Power ON LCD Monitor Select

Main Menu>Programming>ENT>Operator>ENT>Monitor Select>ENT>

- After power of the CombiPlus® is on, the monitor selections will be showed on LCD Display, U1-05 Battery Voltage is the initial display shown.
- All the constants in U1 Group can be programmed (U1-01~U-26).

O1-02: Key Idle Detect Time

Main Menu>Programming>ENT>Operator>ENT> Monitor Select >ENT>

- Use constant O1-02 to set the idle time when the keyboard is not operated and once any key is pressed, the display will return to the LCD monitor selection value set in constant O1-01.
- Initial Setting=180 sec, setting range: 10~600 sec.

4.5 Main Menu : Programming "Key Selections"

Key Selections……

O2 Group (Key Selections)

O2-01: Key Pressed Beep Select

Main Menu>Programming>ENT>Operator>ENT>Key Selections>ENT>

Setting	Function
O2-01=0	When keys are pressed, beep sound will not be heard.
O2-01=1 (Initial setting)	When keys are pressed, beep sound will be heard.

O2-02: Elapsed Time Reset

Main Menu>Programming>ENT>Operator>ENT>Key Selections>ENT>

- Use constant O2-02 to reset elapsed time.

O2-03: Elapsed Time Select

Main Menu>Programming>ENT>Operator>ENT>Key Selections>ENT>

Setting	Function
O2-03=0 (Initial setting)	The elapsed time started to be counted after power is on.
O2-03=1	The elapsed time started to be counted after RUN.

O2-04: CombiPlus® Model

Main Menu>Programming>ENT>Operator>ENT>Key Selections>ENT>

- This is the model number to be displayed.

O2-06: MODE Key Hold Time

Main Menu>Programming>ENT>Operator>ENT>Key Selections>ENT>

- Use constant O2-06 to set the time it takes to press MODE key to transfer from one of four modes to another mode. (This has to be done in STOP mode)
- Initial setting=5 sec, setting range: 2~10 sec.

O2-07: RUN/STOP Key Hold Time

Main Menu>Programming>ENT>Operator>ENT>Key Selections>ENT>

- Use constant O2-07 to set the time it takes to press RUN/STOP key to activate its function.
- Initial setting=2 sec, setting range: 2~10 sec.

O2-08: Power ON Auto Run Select

Main Menu>Programming>ENT>Operator>ENT>Key Selections>ENT>

- Use constant O2-08 to select to auto run manually or automatically.

Setting	Function
O2-08=0	Auto Run is active when pressing Run/STOP key
O2-08=1 (Initial setting)	Auto Run is active when the power is on.

O2-09: LCD Display Idle Time Set

Main Menu>Programming>ENT>Operator>ENT>Key Selections>ENT>

- When O2-09=0, Display Idle Function is disabled.
- Use constant O2-09 to set the idle time when the keypad is not operated and all the LCD Display and LED Indicators of the CombiPlus® entering the idle mode which only RUN/STOP indicator is active.
- Once any key on the panel is pressed, it will return to the display before Idle status.
- Initial setting=10 min, setting range: 0~60 min.

4.6 Main Menu :Operation "Monitor"

Main Menu: Operation

"Monitor"

U1-01: AC IN Voltage

Main Menu>Operation>ENT>Monitor>ENT>

- Use U1-01 to monitor the current voltage value of AC IN power in unit of 0.1V.

U1-02: AC IN Current

Main Menu>Operation>ENT>Monitor>ENT>

- Use U1-02 to monitor the current value of AC IN power in unit of 0.1A.

U1-03: AC OUT Voltage

Main Menu>Operation>ENT>Monitor>ENT>

- Use constant U1-03 to monitor AC OUT voltage value in unit of 0.1V.

U1-04: AC OUT Current

Main Menu>Operation>ENT>Monitor>ENT>

- Use constant U1-04 to monitor AC OUT current value in unit of 0.1A .

U1-05: Battery Voltage

Main Menu>Operation>ENT>Monitor>ENT>

- Use constant U1-05 to monitor the battery voltage in unit of 0.1V.

U1-06: Battery Ripple Voltage

Main Menu>Operation>ENT>Monitor>ENT>

- Use constant U1-06 to monitor the battery ripple voltage in unit of 0.1V.

U1-07: Battery Current

Main Menu>Operation>ENT>Monitor>ENT>

- Use constant U1-07 to monitor battery current value in unit of 0.1A.

U1-08: Control Mode

Main Menu>Operation>ENT>Monitor>ENT>

- Use constant U1-08 to monitor the current control mode (MODE 1, MODE 2, MODE 3 or MODE 4)

U1-09: Operation Status

Main Menu>Operation>ENT>Monitor>ENT>

- There are 12 digits to account for each operation status. Please see NOTE 1 in Chapter 5 of the User Manual.

U1-10: Aux-Relay Status

Main Menu>Operation>ENT>Monitor>ENT>

Use constant U1-10 to monitor the ON/OFF status of 3 sets of Aux-Relay (RY1, RY2, RY3). Please see NOTE 2 in Chapter 5 of the User Manual.

U1-11: Elapsed Time

Main Menu>Operation>ENT>Monitor>ENT>

- Use constant U1-11 to monitor the elapsed time after power ON (O2-03=0) or after RUN (O2-03=1) in unit of 1 hour.

U1-12: Battery Temperature Sensor

Main Menu>Operation>ENT>Monitor>ENT>

- Use constant U1-12 to monitor the temperature that has been detected by Battery Temperature Sensor (BTS-3) in unit of 1℃.

U1-13: CPU ID1

Main Menu>Operation>ENT>Monitor>ENT>

- Use constant U1-13 to check the software version 1.

U1-14: CPU ID2

Main Menu>Operation>ENT>Monitor>ENT>

- Use constant U1-14 to check the software version 2.

U1-15: Solar Charger Status

Main Menu>Operation>ENT>Monitor>ENT>

- Use constant U1-15 to monitor solar charger status after solar module is connected to the extension port (Port C).

U1-16: Solar Supply Current

Main Menu>Operation>ENT>Monitor>ENT>

- Use constant U1-16 to monitor the solar supply current value in unit of 0.1A.

U1-17: Solar Supply Power

Main Menu>Operation>ENT>Monitor>ENT>

- Use constant U1-17 to monitor the solar supply power value in unit of 1W.

U1-18: Solar Amp-Hours

Main Menu>Operation>ENT>Monitor>ENT>

- Use constant U1-18 to monitor solar Amp-Hours value in unit of 1AH.

U1-19: Solar Total Amp-Hours

Main Menu>Operation>ENT>Monitor>ENT>

- Use constant U1-19 to monitor solar total Amp-Hours value in unit of 1AH.

U1-35: External ATS Status

Main Menu＞ Operation＞ENT＞ Monitor＞ENT＞

- Use constant U1-35 to monitor the external ATS communication status. If it shows “COMM Fault”, the communication between ATS and the CombiPlus is not established.
- When the AC power supply comes from the Master input of AC grid, this constant will show “Master Input” and the CombiPlus will switch to Mode 1 automatically.
- When the AC power supply comes from the Slave input of AC generator, this constant will show “Slave Input” and the CombiPlus will switch to Mode 2 automatically.

Main Menu: Operation

"Fault Trace"

U2 Group (Fault Trace)

U2-01: Current Fault

Main Menu>Operation>ENT>Fault Trace>ENT>

- Use constant U2-01 to monitor the current fault that results in "CombiPlus®" stopping operating.

U2-02: Last Fault

Main Menu>Operation>ENT>Fault Trace>ENT>

- Use constant U2-02 to monitor the last fault that has been recorded.

U2-03: AC IN Voltage

Main Menu>Operation>ENT>Fault Trace>ENT>

- Use constant U2-03 to monitor the AC input voltage value in unit of 0.1V when the current fault occurs.

U2-04: AC IN Current

Main Menu>Operation>ENT>Fault Trace>ENT>

- Use constant U2-04 to monitor the AC input current value in unit of 0.1A when the current fault occurs.

U2-05: AC OUT Voltage

Main Menu>Operation>ENT>Fault Trace>ENT>

- Use constant U2-05 to monitor the AC output voltage value in unit of 0.1V when the current fault occurs.

U2-06: AC OUT Current

Main Menu>Operation>ENT>Fault Trace>ENT>

- Use constant U2-06 to monitor the AC output current value in unit of 0.1A when the current fault occurs.

U2-07: Battery Voltage

Main Menu>Operation>ENT>Fault Trace>ENT>

- Use constant U2-07 to monitor the battery voltage value in unit of 0.1V when the current fault occurs.

U2-08: Battery Ripple Volt

Main Menu>Operation>ENT>Fault Trace>ENT>

- Use constant U2-08 to monitor the battery ripple voltage in unit of 0.1V when the current fault occurs.

U2-09: Battery Current

Main Menu>Operation>ENT>Fault Trace>ENT>

- Use constant U2-09 to monitor the battery current value in unit of 0.1A when the current fault occurs.

U2-10: Control Mode

Main Menu>Operation>ENT>Fault Trace>ENT>

- Use constant U2-10 to monitor what the control mode (MODE 1, MODE 2, MODE 3 or MODE 4) is when the current fault occurs.

U2-11: Operation Status

Main Menu>Operation>ENT>Fault Trace>ENT>

- Use constant U2-11 to monitor 12 digits which account for each operation status when the current fault occurs. Please see NOTE 1 in Chapter 8.

U2-12: Aux-Relay Status

Main Menu>Operation>ENT>Fault Trace>ENT>

- Use constant U2-12 to monitor the ON/OFF status of 3 sets of Aux-Relay (RY1, RY2, RY3) when the current fault occurs. Please see NOTE 2 in Chapter 8.

U2-13: Elapsed Time

Main Menu>Operation>ENT>Fault Trace>ENT>

- Use constant U2-13 to monitor the elapsed time after power ON (O2-03=0) or after RUN (O2-03=1) in unit of 1 hour when the current fault occurs.

U2-14: Solar Charger Status

Main Menu>Operation>ENT>Fault Trace>ENT>

- Use constant U2-14 to monitor solar charger status when the current fault occurs. This constant is only visible when extension port is connected to solar module.

U2-15: Solar Charge Current

Main Menu>Operation>ENT>Fault Trace>ENT>

- Use constant U2-15 to monitor the solar charge current value in unit of 0.1A when the current fault occurs.

U2-16: Solar Supply Power

Main Menu>Operation>ENT>Fault Trace>ENT>

- Use constant U2-16 to monitor the solar supply power value in unit of 1W when the current fault occurs.

U2-17: Solar Amp-Hours

Main Menu>Operation>ENT>Fault Trace>ENT>

- Use constant U2-17 to monitor solar Amp-Hours value in unit of 1AH when the current fault occurs.

U2-18: Solar Total Amp-Hours

Main Menu>Operation>ENT>Fault Trace>ENT>

- Use constant U2-18 to monitor solar total Amp-Hours value in unit of 1AH when the current fault occurs.

U2-26: Battery Temperature Sensor

Main Menu>Operation>ENT>Fault Trace>ENT>

- Use constant U2-26 to monitor the current temperature that has been detected by Battery Temperature Sensor (BTS-3) in unit of 1℃ when the current fault occurs.

4.8 Main Menu : Operation "Fault History"

Main Menu: Operation

"Fault History"

U3 Group (Fault History)

U3-01: Last Fault

Main Menu>Operation>ENT>Fault History>ENT>

- Use constant U3-01 to monitor the latest fault stored in the software.

U3-02: Fault Message 2

Main Menu>Operation>ENT>Fault History>ENT>

- Use constant U3-02 to monitor the most recent second fault stored in the software.

U3-03: Fault Message 3

Main Menu>Operation>ENT>Fault History>ENT>

- Use constant U3-03 to monitor the most recent third fault stored in the software.

U3-04: Fault Message 4

Main Menu>Operation>ENT>Fault History>ENT>

- Use constant U3-04 to monitor the most recent fourth fault stored in the software.

U3-05: Elapsed Time 1

Main Menu>Operation>ENT>Fault History>ENT>

- Use constant U3-05 to monitor the elapsed time before the latest fault occurs.

U3-06: Elapsed Time 2

Main Menu>Operation>ENT>Fault History>ENT>

- Use constant U3-06 to monitor the elapsed time before the most recent second fault occurs.

U3-07: Elapsed Time 3

Main Menu>Operation>ENT>Fault History>ENT>

- Use constant U3-07 to monitor the elapsed time before the most recent third fault occurs.

U3-08: Elapsed Time 4

Main Menu>Operation>ENT>Fault History>ENT>

- Use constant U3-08 to monitor the elapsed time before the most recent fourth fault occurs.

`

Chapter 5 Mode Settings

5.1 Four Control Modes Applications

MODE 1:

AC Power as has Priority to Support the AC Load.

MODE 2:

AC Generator has Priority to Support the AC Load with Dynamic Power Shifting.

MODE 3:

Renewable Energy has Priority to Charge the batteries. The Combi Inverter has Priority to Support the AC load with AC Power Support.

MODE 4:

Renewable Energy has Priority to Charge the batteries with AC Charger Support. The Combi Inverter has Priority to Support the AC load with AC Power Support.

MODE 1:

AC Power as has Priority to Support the AC Load.

(Example of CP-3000-242)

When CombiPlus enters to MODE 1, B2-09 (AC IN DynaCur Limit)=0 (Disable) and the value of B2-18 (MODE1: ACINCurrent Lmt) will be loaded to B2-05.

INVERTER Mode:

- When AC IN=0 A, AC OUT load is completely supplied by INVERTER. It goes to the inverter mode.

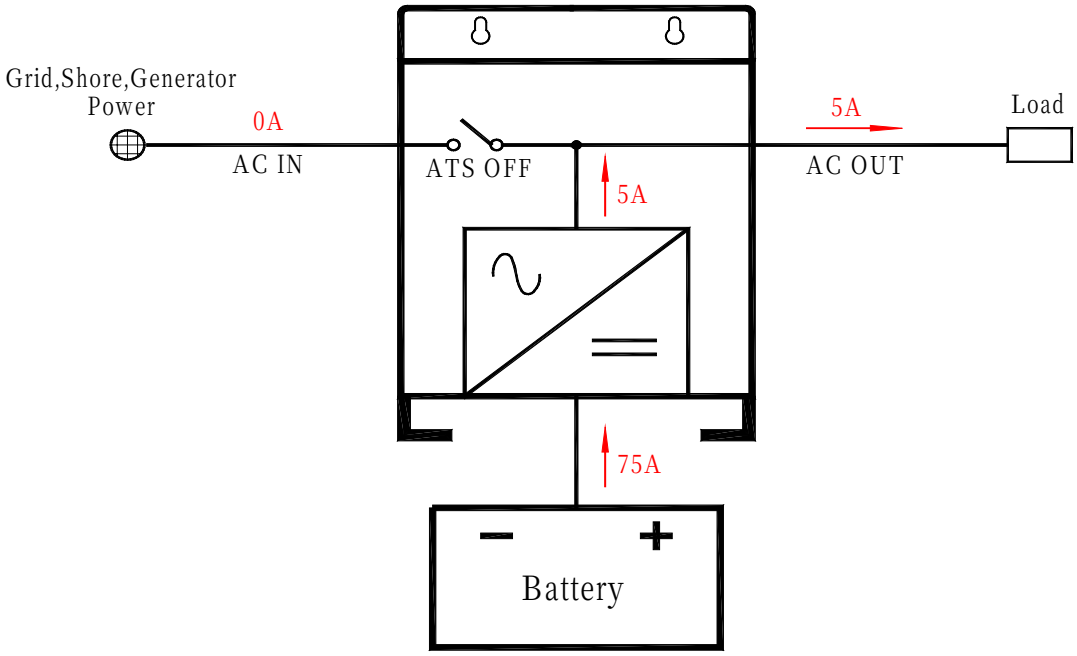

Mode 1

Interactive Power Sharing Mode (a)

- In this example:

  All AC loads are off, with the "CombiPlus" constant B2-05=5A (AC IN Current Limit),

  The AC CHARGER will not take more than 5A with limits to battery charge current to 75A.

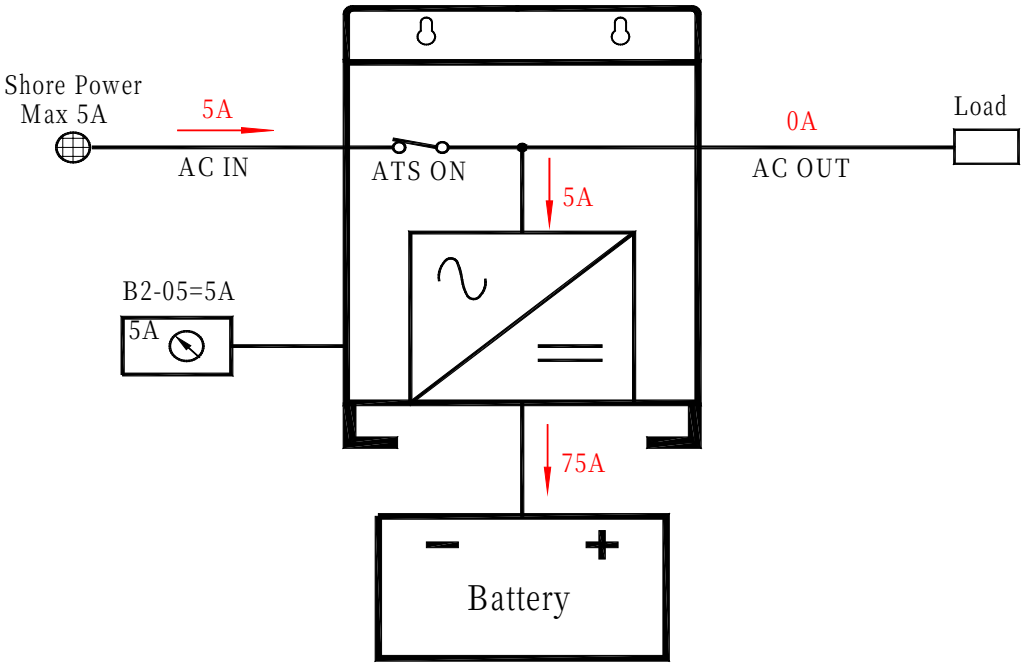

Mode 1

Interactive Power Sharing Mode (b)

- Now some small loads are switched on and load increase to 3A. Only 5-3=2A is left to Charge the batteries and charge current is reduced to about 30A.

  ※ Note: Shore current is automatically limited to 5A and the AC input circuit Breaker will not trip!

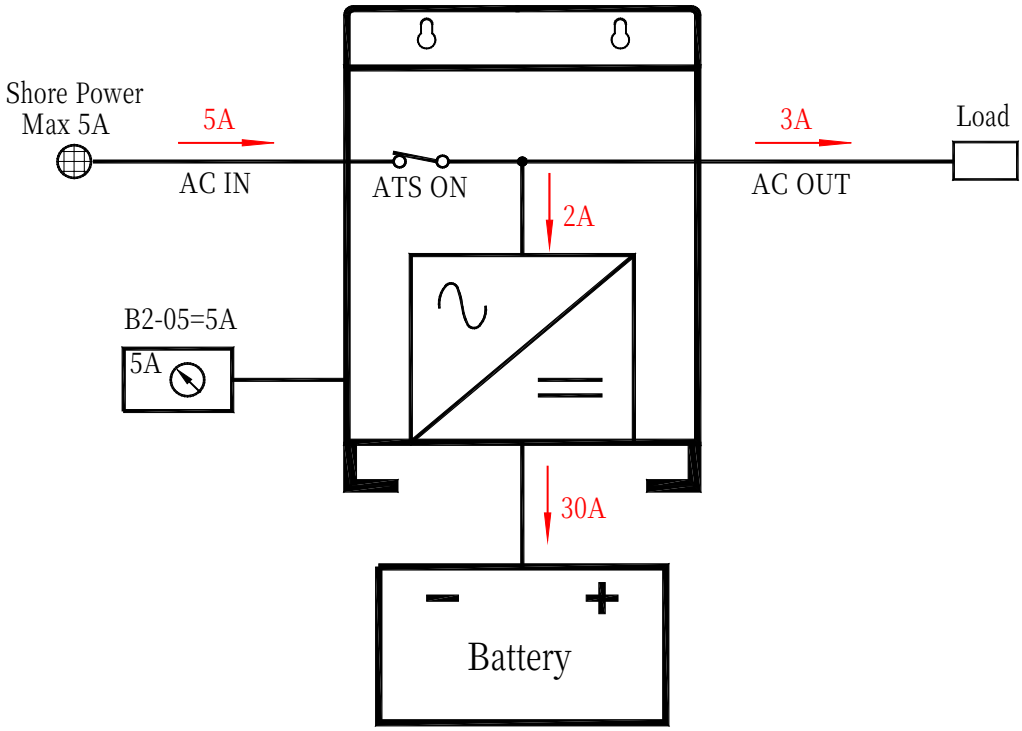

Mode 1

Interactive Power Sharing Mode (c)

- The load is switched on and current consumption increase to 5A. Nothing is left to charge the battery.
- The charge current is automatically reduced to 0A, and the AC input circuit breaker does not trip!

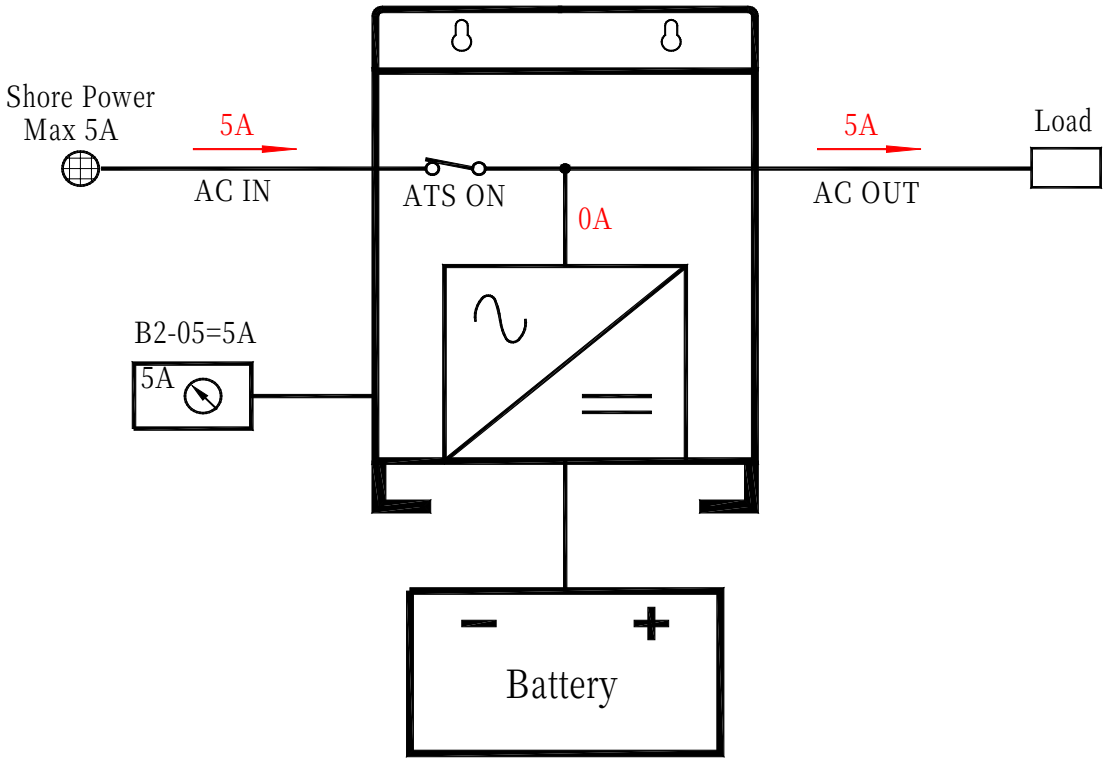

Mode 1

Power Support Mode

- And now the other load adds and switches on and the current increases to 11A. This is where Power Assist is needed.
- The bidirectional converter starts operating as inverter to add 6A to the 5A that is available from the shore-side: Total 6+5=11A, and no overload on the AC supply.
- As soon as the load reduces to less than 5A, any current that is left over will be used to recharge the battery.

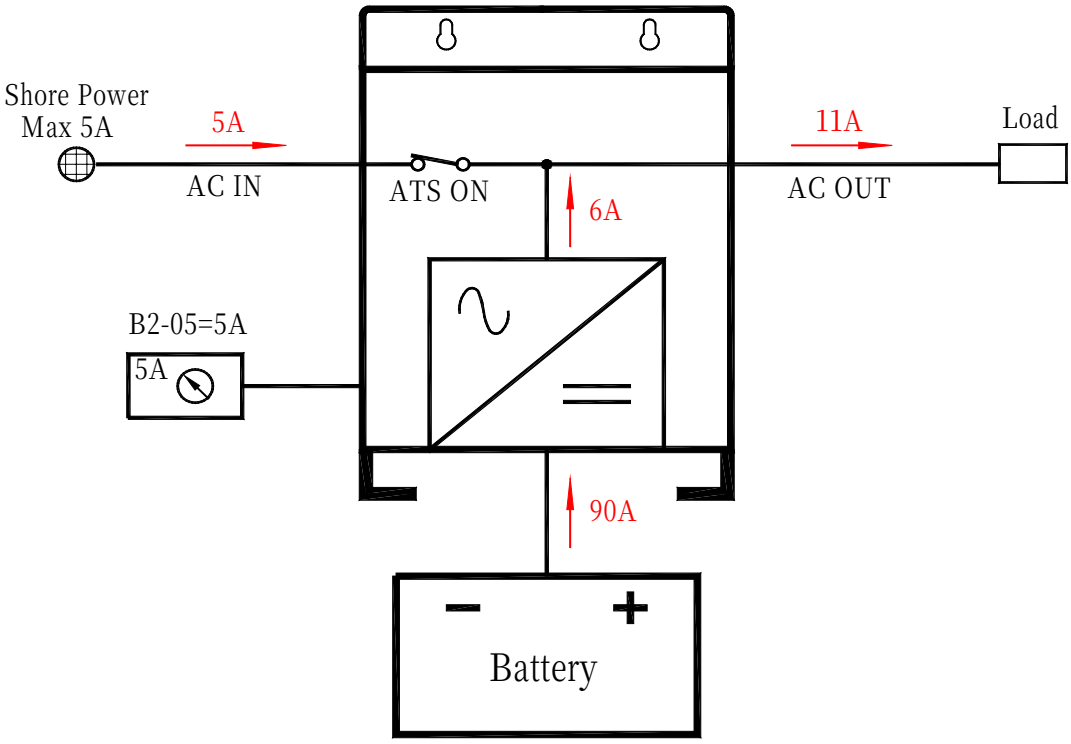

MODE 2:

AC Generator has Priority to Support the AC Load with Dynamic Power Shifting.

When CombiPlus enters to MODE 2, B2-09(AC IN DynaCur Limit)=1 (Enable) and the value of B2-19 (MODE 2: ACINCurrent Lmt) will be loaded to B2-05.

INVERTER Mode:

- When AC IN=0 A, AC OUT load is completely supplied by INVERTER. It goes to the inverter mode.

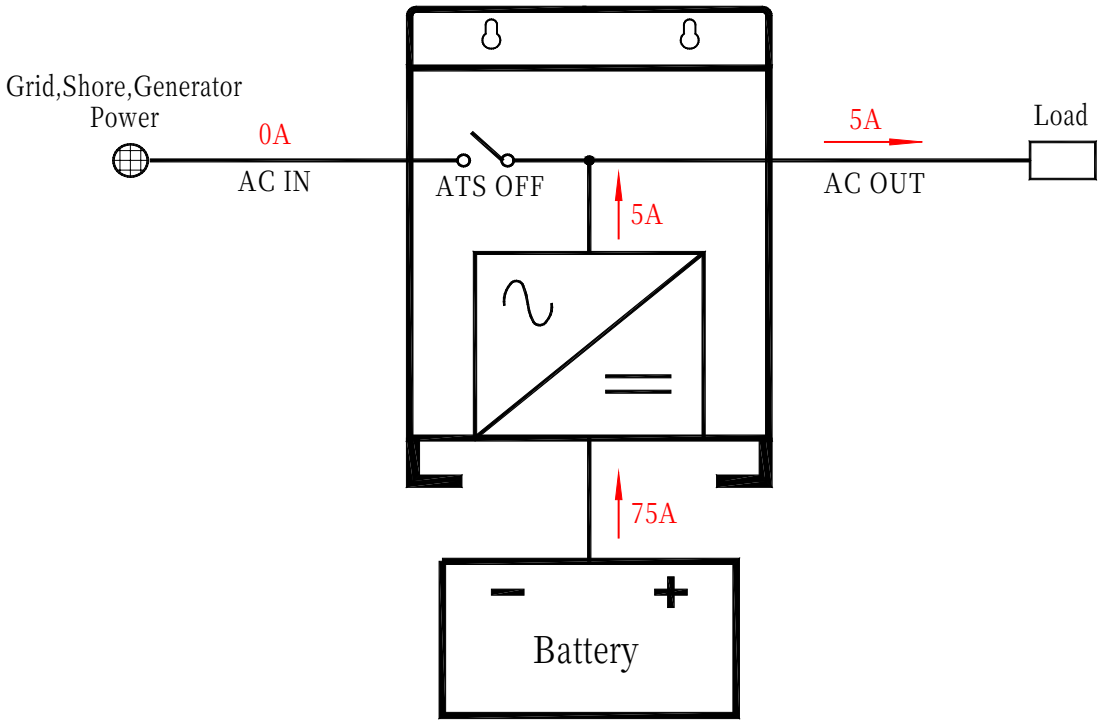

Mode 2

Interactive Power Sharing Mode (a)

- In this example:

  All AC loads are off, with the "CombiPlus" constant B2-05=5A (AC IN Current Limit),

  The AC CHARGER will not take more than 5A with limits to battery charge current to 75A.

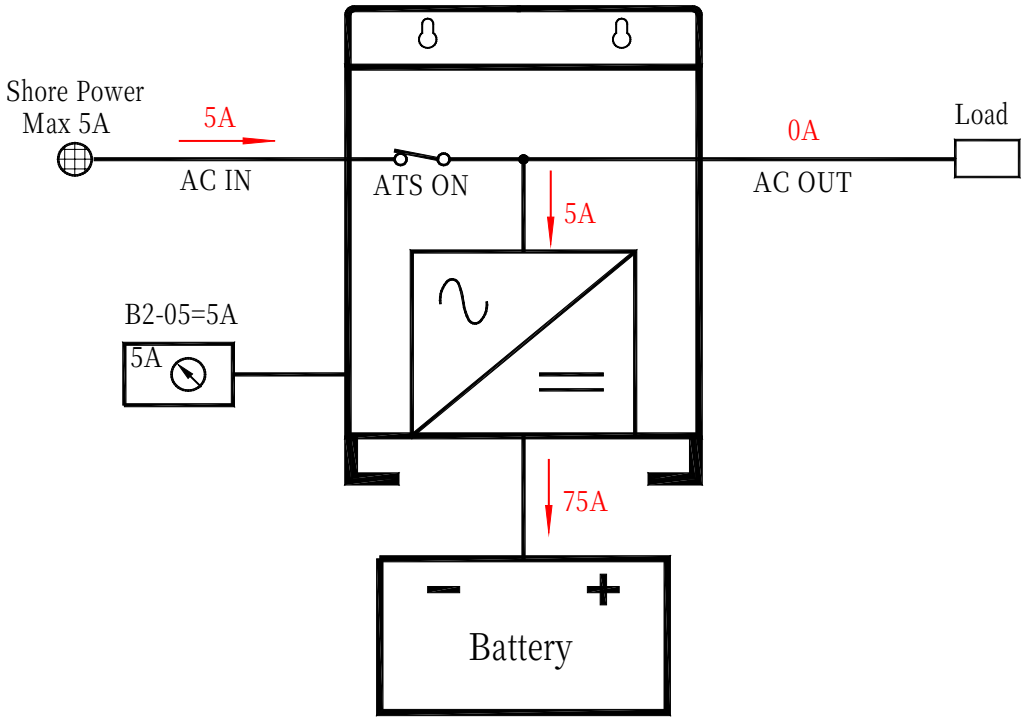

Mode 2

Interactive Power Sharing Mode (b)

- Now some small loads are switched on and load increase to 3A. Only 5-3=2A is left to Charge the batteries and charge current is reduced to about 30A.

  ※ Note: Shore current is automatically limited to 5A and the AC input circuit Breaker will not trip!

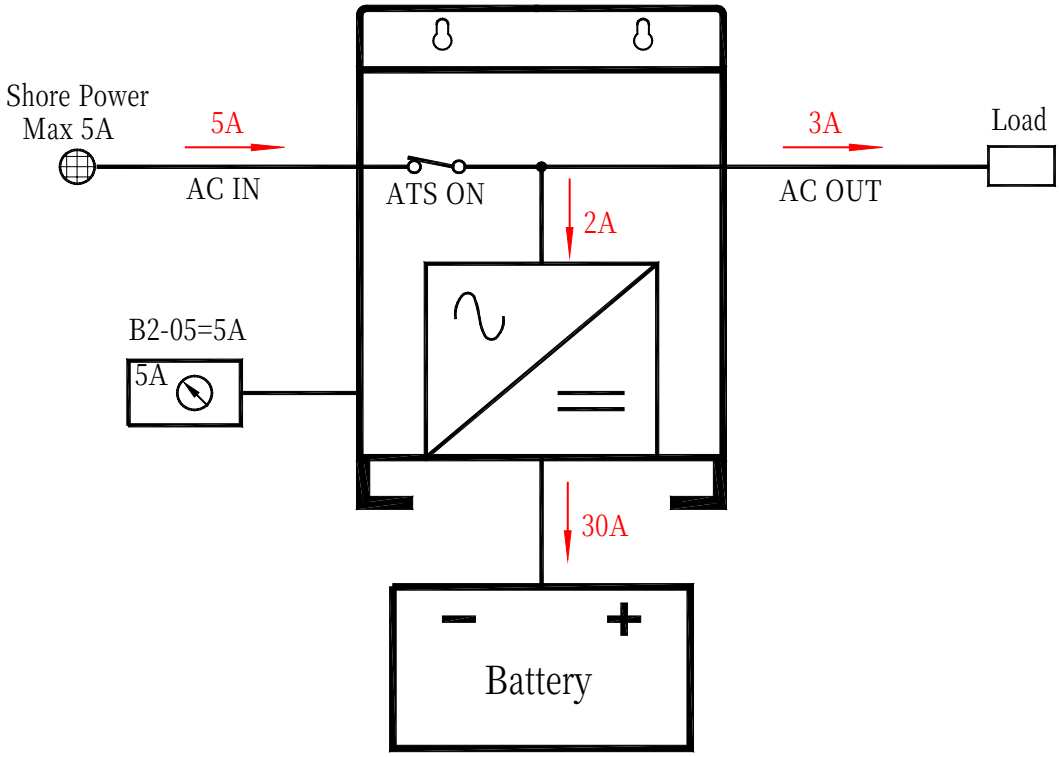

Mode 2

Interactive Power Sharing Mode (c)

- The load is switched on and current consumption increase to 5A. Nothing is left to charge the battery.
- The charge current is automatically reduced to 0A, and the AC input circuit breaker does not trip!

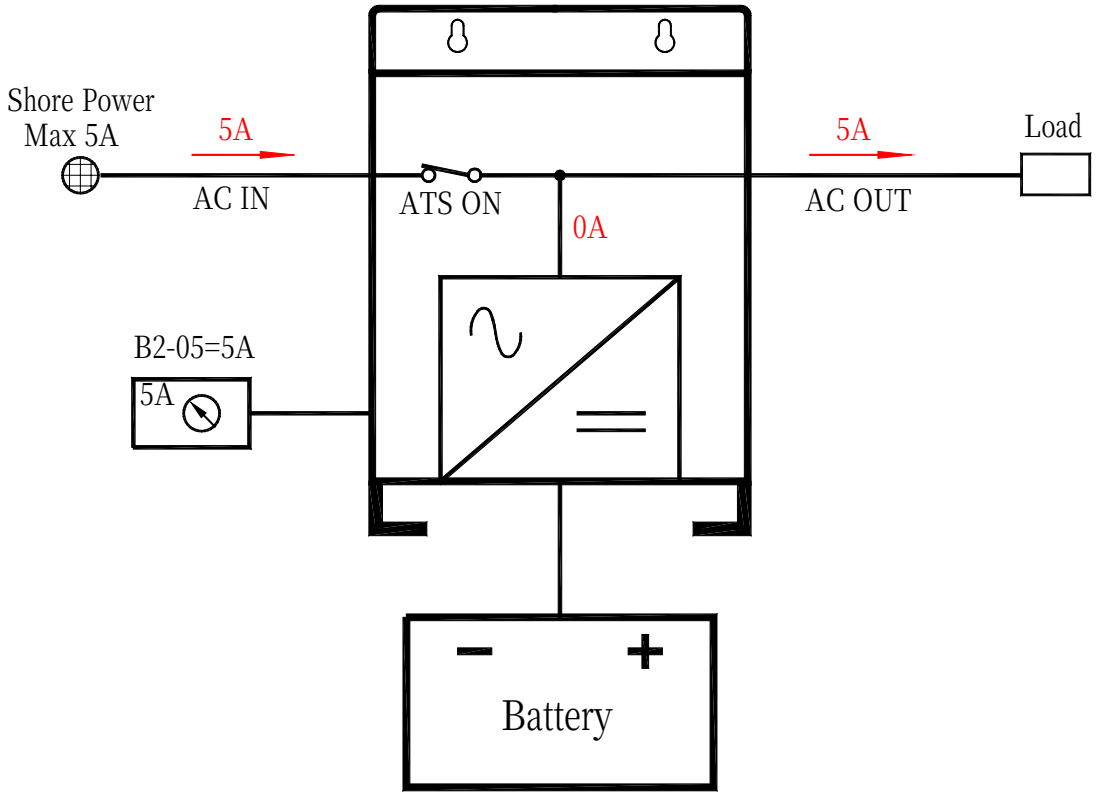

5.2 Green Power Smart Feature

Green Power Smart Feature

Renewable Energy MODES 3 & 4

Green Power Smart Feature:

Green Power Smart Modes 3 and 4 are designed to conserve energy, whether you are connected to the mains grid power or for use in a standalone power system where there is no mains available.

The Green Power Smart feature uses renewable energy such as solar, wind and hydro generation to recharge the batteries and will only connect to the mains grid or start the generator as a last resort.

Even if the Combi unit cannot support the load, it will automatically connect to the grid or start the generator to help supply continuous power until the load has decreased. This ingenious smart power feature will make sure your batteries always get the charge they require, helping them to last longer in demanding installations.

How does Green Power Smart work?

If the system is installed into a typical home with an array of solar panels that produce an average of 7kw per day, this renewable energy is used to re-charge the batteries and power appliances. During the night there is no “free energy” being produced from the solar panels; the appliances are powered from the storage batteries. If the daily energy used to power the fridge, lights, TV and other appliances total 10kw for the day, the Combi unit will automatically know the batteries need to be topped up or recharged from another source. The Combi unit will automatically connect to the mains grid or start a backup generator to replenish this charge.

If the CombiPlus is installed in a boat or where there is no mains power available, a signal can be sent to the generator to automatically start and stop it in the same way as when the system is Connected to the grid power. The generator can be programmed to only operate for minimum run time to avoid intermittent starting of the generator. This ingenious power management will avoid the generator running longer than necessary taking the guess work out of when your generator should be on or off, making for a smart, more refined, fully automated power supply.

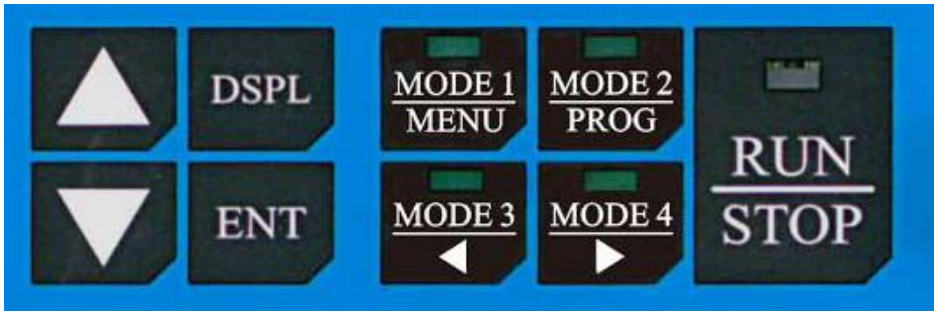

MODE 3:

Renewable Energy has Priority to Charge the batteries. The Combi Inverter has Priority to Support the AC load with AC Power Support

MODE 4:

Renewable Energy has Priority to Charge the batteries with AC Charger Support. The Combi Inverter has Priority to Support the AC load with AC Power Support.

MODE 3:

Renewable Energy has Priority to Charge the batteries.

The Combi Inverter has Priority to Support the

AC load with AC Power Support.

When CombiPlus enters to MODE 3, B2-09(AC IN DynaCur Limit)=0 (Disable) and the value of B2-20 (MODE3: ACINCurrent Lmt) will be loaded to B2-05.

INVERTER Mode:

- When the battery voltage is not lower than (B2-14) voltage value, inverter mode takes priority to supply voltage to AC OUT for load consumption.
  (INVERTER ON+ ATS OFF + AC CHARGER OFF)

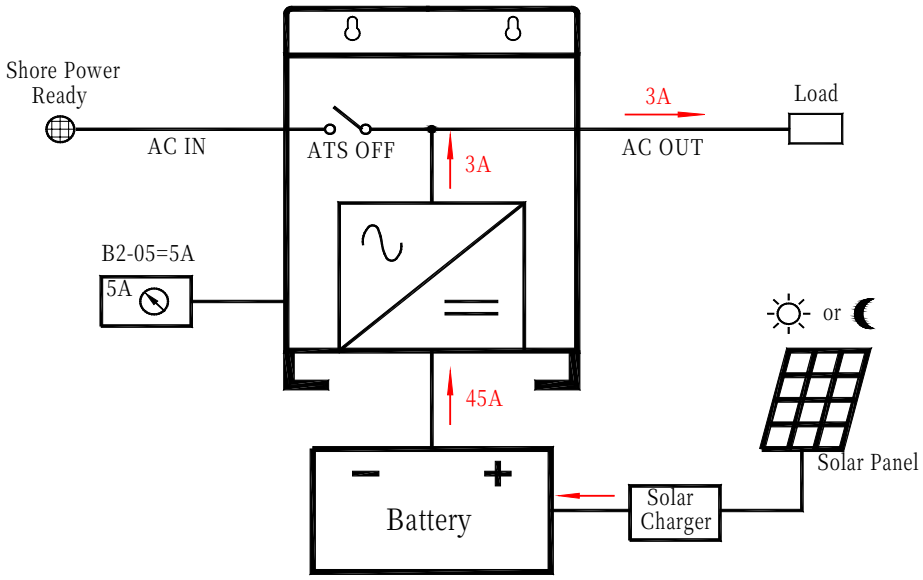

Mode 3

Interactive Power Sharing Mode

- When AC IN power is ready, INVERTER is active and battery voltage is lower than B2-14 voltage value and longer than the second time set in B2-15, ATS will be switched on to ensure AC OUT to continuously supply the load. At the moment, AC OUT will be supplied by AC IN power.
- In Mode 3 The AC CHARGER will remain OFF. The batteries will only be recharged by renewable energy input such as solar, wind generator or DC generator charger.
- The difference between MODE 3 and MODE 4 is that in MODE 3, when AC IN power is ready, AC CHARGER is off and the battery is charged only by other renewable energy sources. This is why MODE 3 is called Green Power as Priority Support Mode (INVERTER OFF+ ATS ON + AC CHARGER OFF)

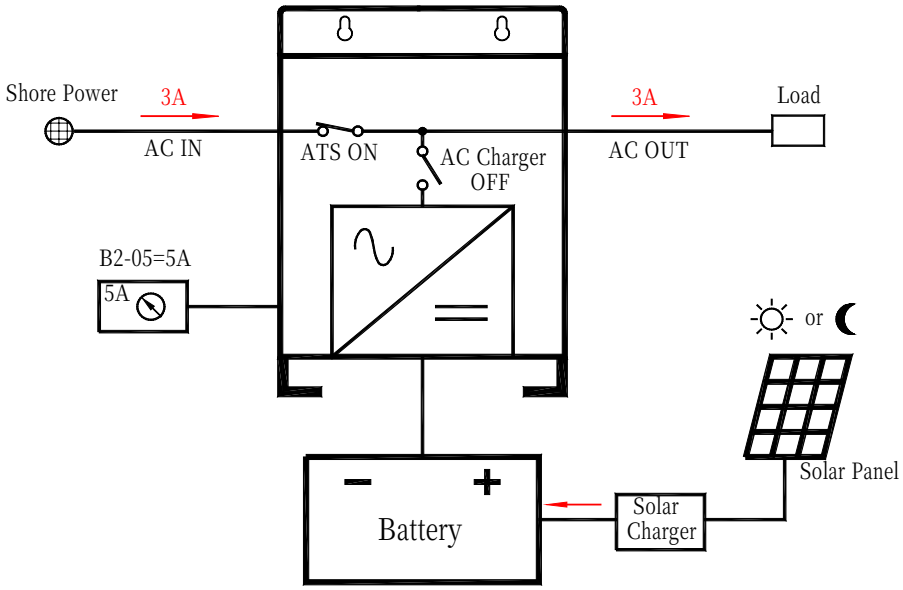

Mode 3

Power Support Mode

- And now the other load adds and the current increases to 11A. This is where Power Support function is needed!
  (ATS ON + AC CHARGER OFF + INVERTER ON + Power Support Mode ON)
- As soon as the load reduces to less than 5A, power assist function stops.

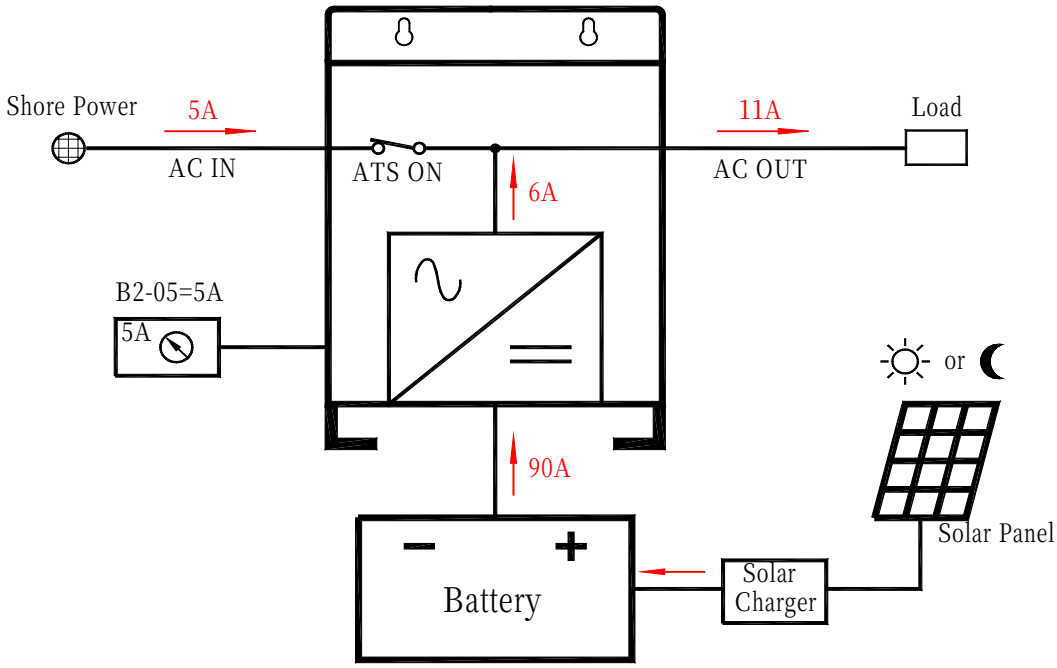

Mode 3

4. "INVERTER Mode" Repeat

- When the battery is recharged by other renewable energy source, battery voltage is higher than B2-14 voltage value and longer than second time set in B2-15, inverter mode takes priority to supply voltage to AC OUT again for load consumption.

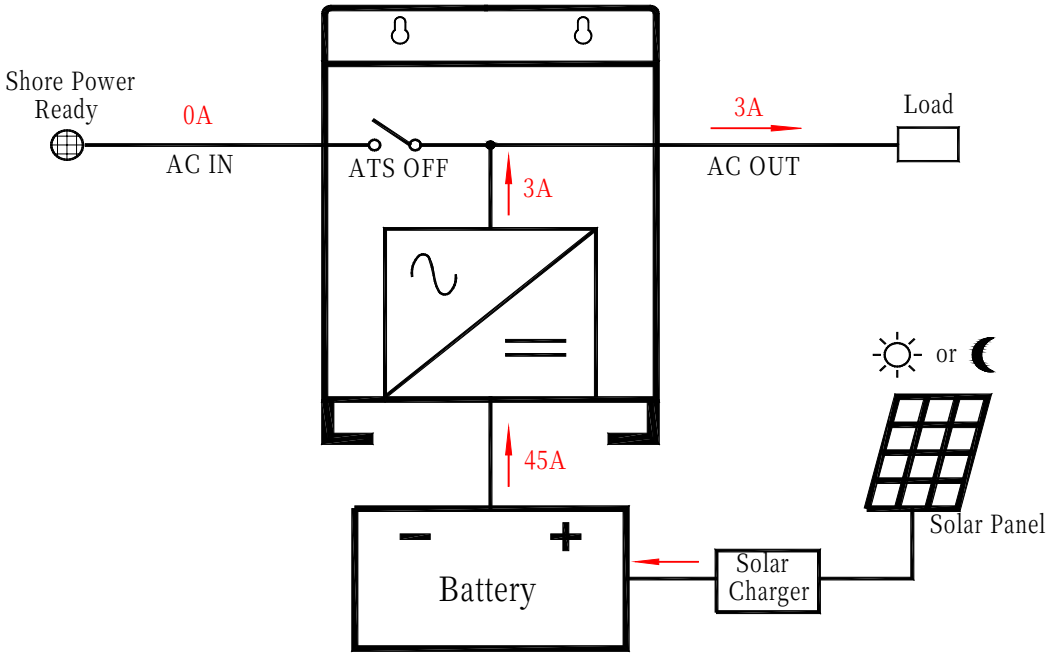

MODE 4:

Renewable Energy has Priority to Charge the batteries with AC Charger Support. The Combi Inverter has Priority to Support the AC load with AC Power Support.

When CombiPlus enters to MODE 4, B2-09(AC IN DynaCur Limit)=0 (Disable) and the value of B2-19 (MODE4: ACINCurrent Lmt)will be loaded to B2-05.

1. INVERTER Mode:

- When the battery voltage is not lower than (B2-10) voltage value, inverter mode takes priority to supply voltage to AC OUT for load consumption.
  (INVERTER ON+ ATS OFF + AC CHARGER OFF)

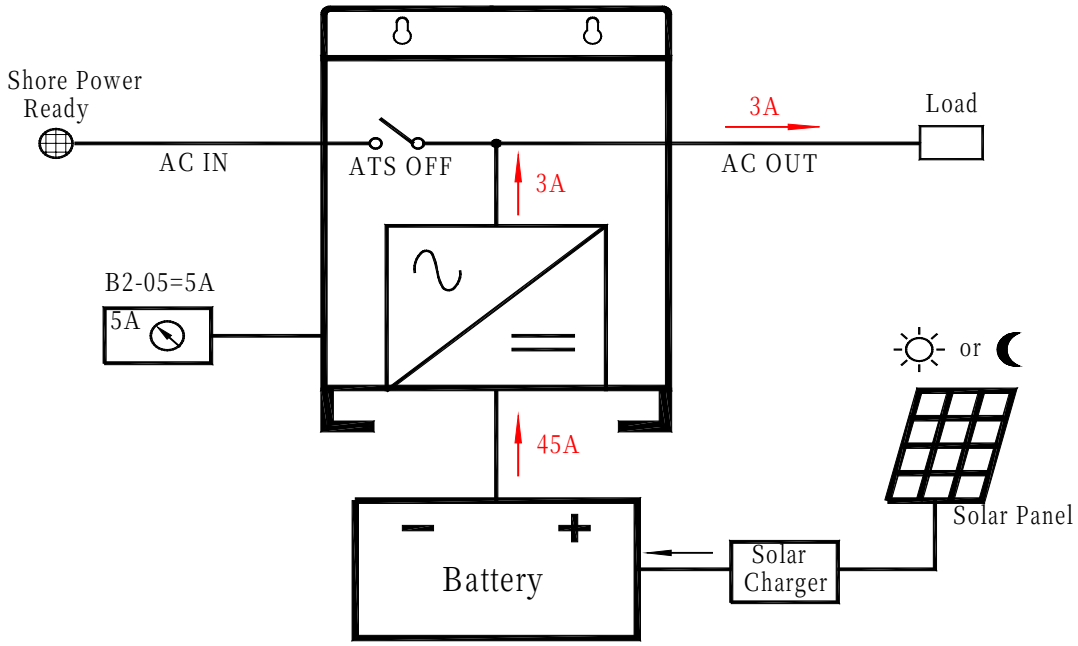

Mode 4

Interactive Power Sharing Mode:

- When AC IN power is ready, INVERTER is active and battery is about to be exhausted, battery voltage is lower than B2-10 voltage value and longer than the second time set in B2-11, ATS will be switched on to ensure AC OUT to continuously the load. At the moment, AC OUT will be supplied by AC IN power. At the same time, the interactive power sharing mode is active and will supply the extra AC IN power to charge the battery! (INVERTER OFF + ATS ON + AC CHARGER ON + Power Share Mode ON)

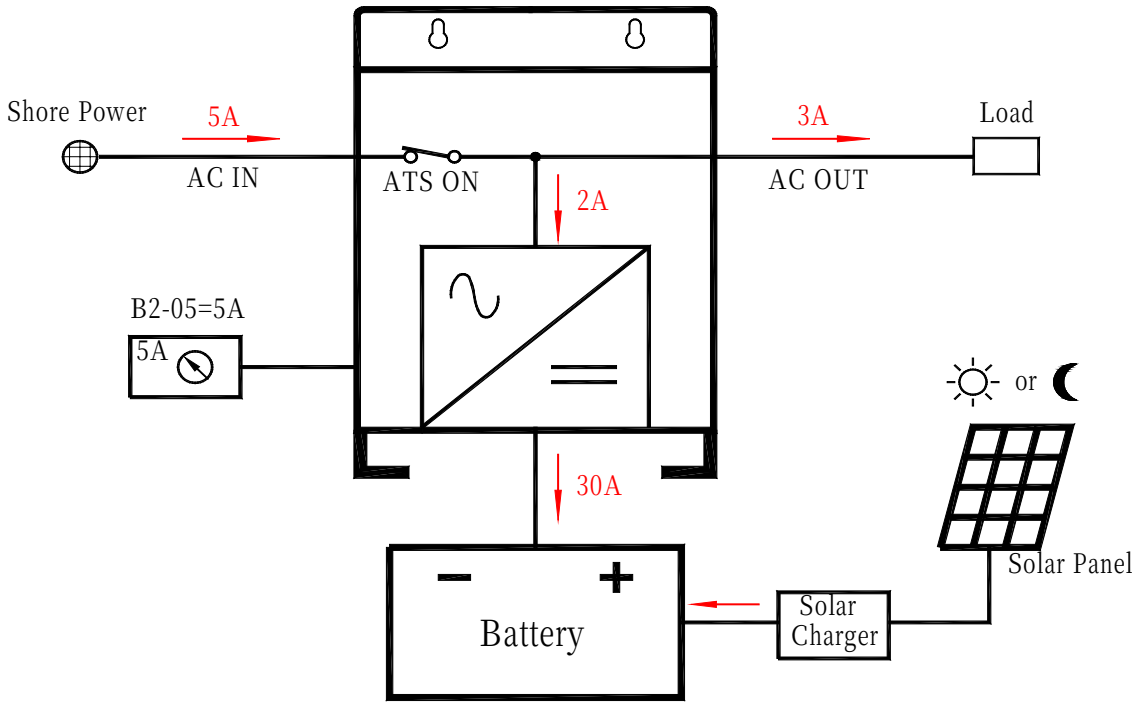

Mode 4

Power Support Mode

- And now the other load adds and the current increases to 11A. This is where Power Support function is needed!

  (ATS ON + AC CHARGER OFF + INVERTER ON + Power Support Mode ON)
- As soon as the load reduces to less than 5A, any current that is left over will be used to recharge the battery.

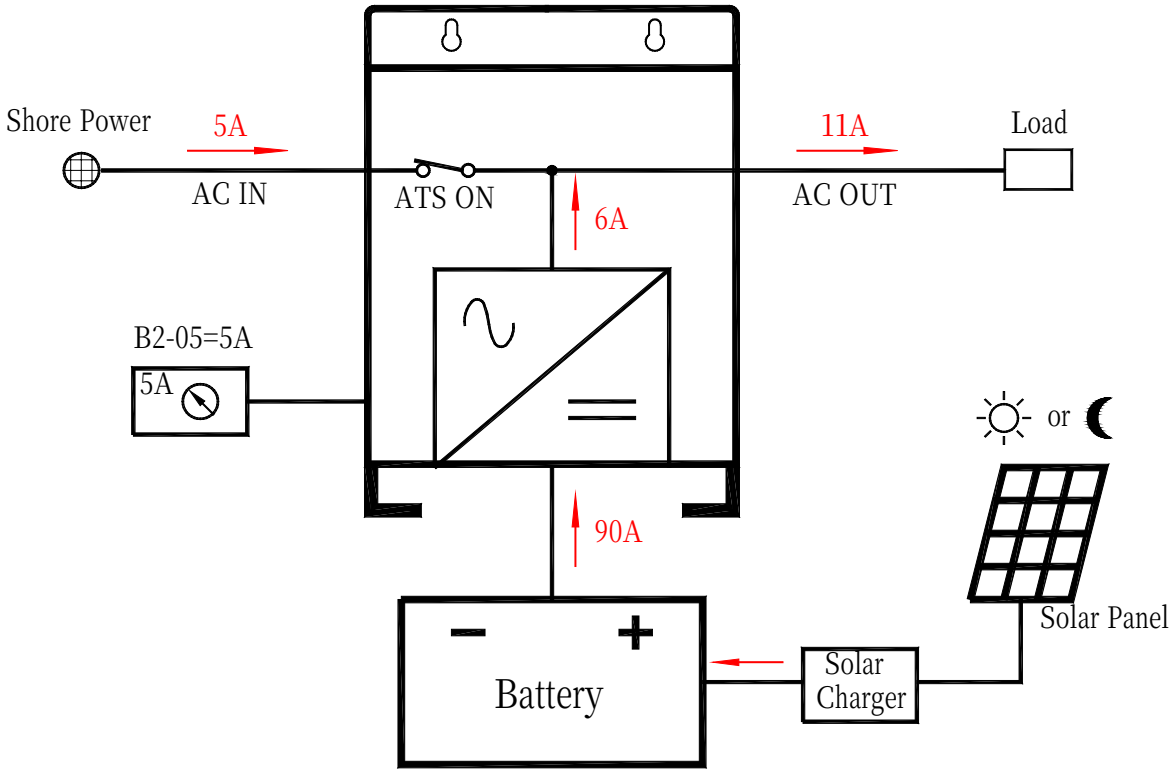

Mode 4

"INVERTER Mode" Repeat

- When the battery voltage is higher than B2-12 voltage value and longer than second time set in B2-15, inverter mode takes priority to supply voltage to AC OUT again for load consumption.

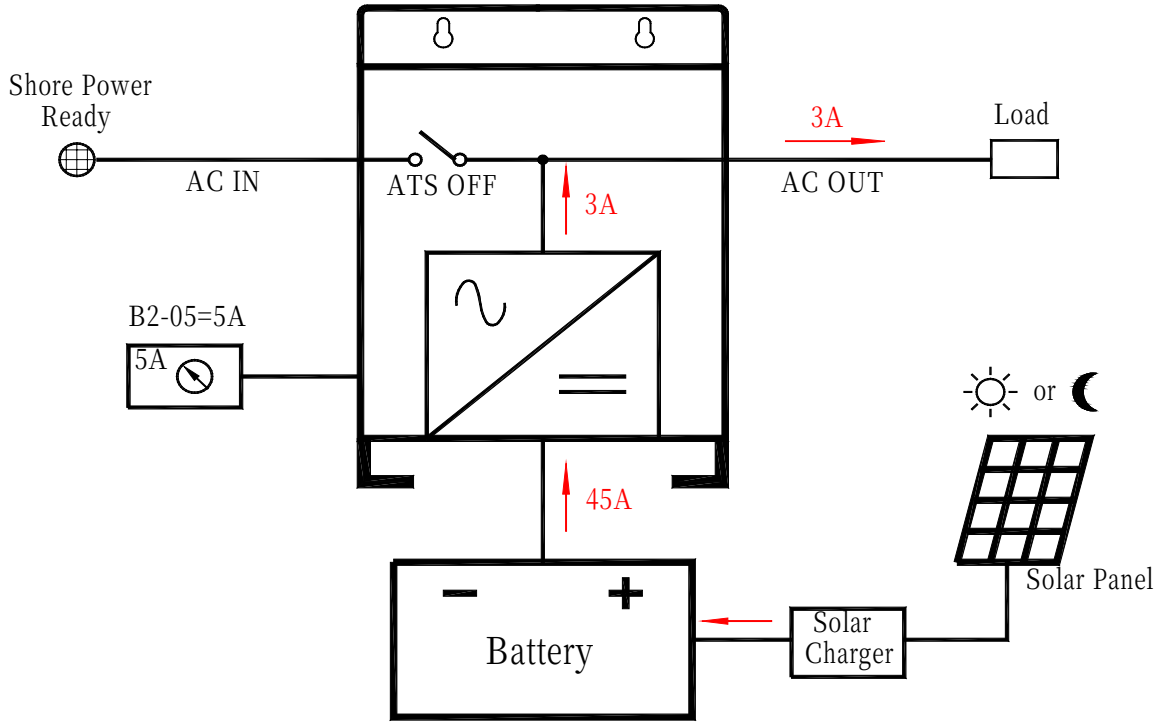

Chapter 6 Programming

Note: **Settings should only be changed by a qualified engineer.**

Carefully read the user manual before any change is made.

Programming Constants

A Group (Initialize):

A1 Group (Initialize)

A1-01: Access level

- Use constant A1-01 to select the user constant access level.
  This level determines which user constants can be changed and displayed.

Setting	Function
A1-01=0	This setting allows the "operation" and "initialize" to be changed or displayed. Use this setting to prevent user constant settings from being changed.
A1-01=1 (Initial setting)	This setting allows all user constants to be changed or displayed.

A1-02: Select Language

- Use constant A1-02 to select the language displayed by the CombiPlus®. A value of 0 set English and values of others set other language.
- This user constant is not returned to factory setting when constants are initialized. It must be manually reset to factory setting.

Setting	Function
A1-02=0 (Initial setting)	English language
A1-02=1	Reserved, under development
A1-02=2	Reserved, under development
A1-02=3	Reserved, under development
A1-02=4	Reserved, under development
A1-02=5	Reserved, under development
A1-02=6	Reserved, under development

A1-03: Init Parameters

- Use constant A1-03 to initialize the user constants.
- When initialized, the user constants will return to their factory preset values. You should normally record the setting of any constants that are changed from factory presets.

Setting	Function
A1-03=0 (Initial setting)	Returns to initialize Display without initializing any user constants.
A1-03=1	Initializes the user constants to factory settings.

A1-04: Init Password 1

- This constant is reserved for the factory to test and set the functions.
- Users are not allowed to set this constant.

Lock the constants setting (A1-01=1)

1. Finish setting all the programmable parameters to desired values.
2. Change A1-01=0 (Operation only), factory setting is A1-01=1 (Constants set).
3. Go to A1-04 and press RUN/STOP key and UP key at the same time till A1-05 parameter occurs.
4. Enter the desired password (max. 4 digits)
5. Press UP key to leave A1-05
   Above procedure completes locking the constants setting and no more programming selection would appear. A1-01 would only display 0 (Operation only) and would not display 1 (Constants set).

Unlock the constants setting

1. Enter the password in A1-04 to be exactly the same as the one earlier set in A1-05
2. When the password in A1-04 matches the one earlier set in A1-05, the unlocking is completed. A1-01=1 (Constants set) would appear again for programming.

B Group (General):

B1 Group (Output Frequency)

B1-01: Output frequency

Main Menu>Programming>ENT>General>ENT>Output Frequency>ENT

- B1-01 is used to set the output frequency at INVERTER AC output

Setting	Function
B1-01=0 (Initial setting)	50Hz at INVERTER AC output
B1-01=1	60Hz at INVERTER AC output

- B2-08: AC IN Frequency Range

Setting	Function
B2-08=0	When B1-01=0: Acceptable AC input frequency is 50Hz ±5Hz (45~55Hz)
	When B1-01=1: Acceptable AC input frequency is 60Hz ±5Hz (55~65Hz)
B2-08=1 (Initial setting)	Accept wide AC input frequency range between 45~65Hz

B2 Group (Auto Transfer Switch)

B2-01: AC IN Low Disconnect

Main Menu>Programming>ENT>General>ENT>Auto transfer Switch>ENT

- Use constant B2-01 to determine the AC IN voltage below which level the ATS (Auto Transfer Switch) will switch off.
- This voltage level will always lie below the AC IN Low Connect (B2-02) level. In fact, changing this level will also change the AC IN Low Connect (B2-02) level.

B2-02: AC IN Low Connect

Main Menu>Programming>ENT>General>ENT>Auto transfer Switch>ENT

- This setting forms a pair with AC IN Low Disconnect (B2-01). With this setting, one determines the AC IN low voltage at which level the ATS will switch on. This should lie above AC IN Low Disconnect (B2-01) level to prevent continuous switching off the ATS when the voltage is fluctuating around the level. The parameter which is changed is the difference between AC IN Low Disconnect (B2-01) and AC IN Low Connect (B2-02).
- The result of this is that when changing B2-01 level, this level (B2-02) also changes.

※ Note: B2-02 can be ignored for a short time when AC IN Waveform Check (B2-06) is Disabled (B2-06=0)

- When the AC IN voltage drops due to the increasing charge current, the AC CHARGER will take care that the voltage does not drop below this level.
- B2-02=B2-01+offset voltage
  For example: CP-1500-122, when B2-01=180V, B2-02=187V, offset voltage=7V (187-180), B2-02 will automatically go to 197V(190+7) after B2-01 is changed to 190V.

B2-03: AC IN High Connect

Main Menu>Programming>ENT>General>ENT>Auto transfer Switch>ENT

- This setting forms a pair with AC IN High Disconnect (B2-04). With this setting, one determines the AC IN high voltage at which level the ATS will switch on. This should lie below the AC IN High Disconnect (B2-04) level to prevent continuous switching of the ATS when the voltage is fluctuating around that level.
- In fact, the parameter which is changed is the difference between AC IN High Disconnect (B2-04) and AC IN High Connect (B2-03).
- The result of this is that when changing B2-04 level, this level (B2-03) also changes.
- B2-03=B2-04 – offset voltage For example: CP-1500-122, when B2-03=265V, B2-04=270V, offset voltage=5V (270-265), B2-03 will automatically go to 255V(260 – 5) after B2-04 is changed to 260V.

B2-04: AC IN High Disconnect

Main Menu>Programming>ENT>General>ENT>Auto transfer Switch>ENT

- Use constant B2-04 to determine the AC IN voltage above which level the ATS will switch off.
- This voltage level will always lie above the AC IN High Connect (B2-03) level. In fact, changing this level will also change the AC IN High Connect (B2-03) level.

B2-05: Interactive Power Sharing "AC IN Current Limit"

Main Menu>Programming>ENT>General>ENT>Auto transfer Switch>ENT

- Use constant B2-05 to set the set the specific maximum AC input current. This value is very important for both battery charger and inverter output power Support.
- When using constant B2-05, the values determine the actual AC current limit.

※Note: With Power Support enabled, there is a minimum value for the AC input current limit. Please see the note at Power Support (page 71).

B2-06: AC IN Waveform Check

Main Menu>Programming>ENT>General>ENT>Auto transfer Switch>ENT

- Use constant B2-06 to enable/disable the fast detection of input voltage wave shape.

Setting	Function
B2-06=0 (Ignore)	● By disabling AC IN waveform check, AC IN Low Disconnect (B2-01) is ignored. When the load current is higher 1.5 times than AC In Current Limit (B2-05), this is used to prevent unnecessary switching to INVERTER due to voltage drop when a high load is connected.
B2-06=1 (Initial setting) (Active)	● This detection checks the wave shape, if it is not sinusoidal within certain limits, the AC input voltage is rejected. ● However, certain generator or very weak mains supply have an ill shaped sinusoidal output especially when the load suddenly changes. The fast detection will detect a failure in such a case. ● This will result in a slightly longer transfer time.

B2-07: Ground Relay (MEN)

Main Menu>Programming>ENT>General>ENT>Auto transfer Switch>ENT

- Used to enable/disable the internal ground relay functionality. The ground relay is useful when an earth-leakage circuit-breaker is part of the installation.
- When ATS (Auto Transfer Switch) is open (INVERTER mode), the Neutral of the inverter is connected to "G" terminal.
- When ATS closes (AC IN is transferred to AC OUT), the Neutral is first disconnected from "G" terminal.

Setting	Function
B2-07=0	The internal ground relay is open with "G" terminal.
B2-07=1 (Initial setting)	The internal ground relay is closed with "G" terminal.

B2-08: AC IN Frequency Range

Main Menu>Programming>ENT>General>ENT>Auto transfer Switch>ENT

- B2-08: is used to set the AC IN Frequency Range

Setting	Function
B2-08=0	When B1-01=0: Acceptable AC input frequency is 50Hz ±5Hz (45~55Hz)
	When B1-01=1: Acceptable AC input frequency is 60Hz ±5Hz (55~65Hz)
B2-08=1 (Initial setting)	Accept wide AC input frequency range between 45~65Hz

B2-09: AC IN Dynamic Power Shifting

Main Menu>Programming>ENT>General>ENT>Auto transfer Switch>ENT

- This setting is an expansion of the AC IN Current Limit (B2-05) mechanism.

Setting	Function
B2-09=0 (Initial setting)	● The AC current limit is specified by the AC IN Current Limit (B2-05) setting
B2-09=1	● The effective AC input current limit depends on the load history. When the load is lower than the AC IN Current Limit (B2-05), the effective AC input current limit is also lower but slightly above the load. ● When the load increase, the effective current limit also increases with a delay. The thought behind this is that when a generator is running at a low load, it can't switch to full load immediately and it needs some time to increase the power.

An example:

- We have a 2KVA generator.
  We adjust the AC IN Current Limit (B2-05) setting to 8A and we enable Power Support (C1-05=1). We have no load connected and the batteries are fully charged. Therefore, no current from generator is drawn.
- At this moment, we connect a load of 7A to the CombiPlus® with this setting (B2-09) disabled, the CombiPlus® would not react because the load is below the AC IN Current Limit (B2-05) setting. The result is that the full load is connected to generator which will drop in voltage because it can't deliver that current instantly which could result in switching to INVERTER.
- If however we had this setting (Dynamic Power Shifting) enabled, the effective AC input current limit would be far lower than 8A because the load was zero. So connecting a load of 7A will result in CombiPlus® starting to power Support and no voltage drop is being examined on the AC OUT. The generator starts to supply the load and the effective AC input current limit will increase to 8A slowly. At the moment, the CombiPlus® will stop Power Support and the full load is on the generator.
- This is powerful option in combination with Power Support but even without Power Support, it can prevent unnecessary switching to INVERTER because the charge current will reduce when AC input current becomes higher than the effective AC input current limit.

B2-10: MODE4: Bat Lo?V ATS ON
B2-11: MODE4: Bat Lo?S ATS ON
B2-12: MODE4: Bat Hi?V ATSOFF
B2-13: MODE4: Bat Hi?S ATSOFF
B2-14: MODE3: Bat Lo?V ATS ON
B2-15: MODE3: Bat Lo?S ATS ON
B2-16: MODE3: Bat Hi?V ATSOFF
B2-17: MODE3: Bat Lo?S ATSOFF

B2-10~B2-13 are used to set the condition of ATS to be ON/OFF in MODE4
B2-14~B2-17 are used to set the condition of ATS to be ON/OFF in MODE3

- When CombiPlus® is in either MODE4 or MODE3, INVERTER mode takes priority to supply voltage to AC OUT for load consumption. When AC IN power is ready, INVERTER is active and battery is about to be exhausted, ATS will be switched on to ensure AC OUT to continuously supply the load. At the moment, AC OUT will be supplied by AC IN power. At the same time, the battery can be charged by other renewable energy such as solar charger, wind charger or DC generator charger (MODE3) which is normally the solar house application in no need of AC CHARGER.
- MODE3: B2-14 and B2-15 are used to set ATS to be “ON” when the battery voltage is lower than B2-14 voltage value and longer than the second time set in B2-15 in MODE3.
  (ATS ON+INVERTER OFF+AC CHARGER ON)
- MODE 3: B2-16 and B2-17 are used to set ATS to be “OFF” when the battery voltage is higher than B2-16 voltage value and longer than the second time set in B2-17 in MODE3.
  (INVERTER ON+ATS OFF+ AC CHARGER OFF)

- In (MODE 4) The battery can be charged by AC IN (AC CHARGER) or other renewable energy such as solar charger, wind charger or DC generator charger which is normally the application requesting both AC charging and DC charging.
  When charging battery slowly reaches to certain level, this means battery will be fully charged soon and the ATS will be switched off for INVERTER to take over the ongoing supply to AC OUT for load.
- MODE 4: B2-10 and B2-11 are used to set ATS to be “ON” when the battery voltage is lower than B2-10 voltage value and longer than the second time set in B2-11 in MODE4.
  (INVERTER OFF+ATS ON+AC CHARGER ON)
- MODE 4: B2-12 and B2-13 are used to set ATS to be “OFF” when the battery voltage is higher than B2-12 voltage value and longer than the second time set in B2-13 in MODE4.
  (INVERTER ON+ATS OFF+AC CHARGER OFF)

B2-18: MODE1: ACIN Current Lmt

Main Menu>Programming>ENT>General>ENT>Auto transfer Switch>ENT

- Use constant B2-18 to set the set the specific maximum AC input current in MODE 1. This value is very important for both battery charger and inverter output power Support.
- When using constant B2-18, the values determine the actual AC current limit.

B2-19: MODE2: ACIN Current Lmt

Main Menu>Programming>ENT>General>ENT>Auto transfer Switch>ENT

- Use constant B2-19 to set the set the specific maximum AC input current in MODE 2. This value is very important for both battery charger and inverter output power Support.
- When using constant B2-19, the values determine the actual AC current limit.

B2-20: MODE3: ACIN Current Lmt

Main Menu>Programming>ENT>General>ENT>Auto transfer Switch>ENT

- Use constant B2-20 to set the set the specific maximum AC input current in MODE 3. This value is very important for both battery charger and inverter output power Support.
- When using constant B2-20, the values determine the actual AC current limit.

B2-21: MODE4: ACIN Current Lmt

Main Menu>Programming>ENT>General>ENT>Auto transfer Switch>ENT

- Use constant B2-21 to set the set the specific maximum AC input current in MODE 4. This value is very important for both battery charger and inverter output power Support.
- When using constant B2-21, the values determine the actual AC current limit.

B2-29: External ATS Select

Main Menu＞ Programming＞ENT＞General＞ENT＞Auto transfer Switch＞ENT

- Constant B2-29 is used to select to enable or disable the external ATS for the AC power supply control selection.

B3 Group (Parallel System)

B3-01: Number of Slaves

Main Menu>Programming>ENT>General>ENT>Parallel System>ENT

- A parallel system is built with 1 master and up to 4 slaves with this setting, one can specify the number of slaves in system. This setting has only to be done in the master. It is not required to specify the number of slaves. The system will work just fine without this setting being specified.
- This setting is added for convenience of the end-user when the AC IN power is larger than the total of B2-05* the number of the CombiPlus® (Master + Slaves) when B3-01=0. The only effect of this setting is on the scaling of AC IN Current Limit (B2-05). If B3-01=0, one must divide the available AC current by the number of CombiPlus® (Master + Slaves) and set the limit accordingly. So an example of setting the B2-05=10A in a parallel system with 3 CombiPlus® would result in a limit of 3*10A=30A
- Please Note: If however in this system the number of slaves is set 2 (B3-01=2), then the division is done internally and setting the AC IN Current Limit to 10A (B2-05=10) will result in 10A for the whole system and shared by the Master and Slaves. This system is often applied when the AC IN power is limited such as the generator of limited small capacity.

B4 Group (2-3 Phase)

B4-01: 2-3 Phase Connection

Main Menu>Programming>ENT>General>ENT>2-3 Phase>ENT

- All the CombiPlus® in a multi-phase system must have 2-3 phase enabled. Use this setting to perform this.
- If more CombiPlus® per phase are connected in parallel, then only the masters of parallel system must have 2-3 phase enabled.

Setting	Function
B4-01=0 (Initial setting)	2-3 Phase connection disabled.
B4-01=1	2-3 Phase connection enabled.

B4-02: 2-3 Phase Master

Main Menu>Programming>ENT>General>ENT>2-3 Phase>ENT

- In a multi-phase system, there is always one (and only one) master. The CombiPlus® for other phases are called followers.
- Use this setting to designate one of the CombiPlus® is master. If this parameter is set (B4-02=0), the CombiPlus® is a follower.

Setting	Function
B4-02=0 (Initial setting)	2-3 Phase connection system is called Follower
B4-02=1	2-3 Phase connection system is called Master

B4-03: 2-3 Phase Type

Main Menu>Programming>ENT>General>ENT>2-3 Phase>ENT

- Use constant B4-03 to determine the kind of multi-phase required.

Setting	Function
B4-03=0 (Initial setting)	3 Phase type: Three CombiPlus® are required. Output is 3-phase with 120 ° phase shift.
B4-03=1	Split Phase 180 ° Type: Two CombiPlus® are required. Output is 2-phase with phase 180 ° shift
B4-03=2	Two Leg 3 Phase 120 ° Type: Two CombiPlus® are required. Output is 2-phase of a normal 3-phase system so two phases with 120 ° phase shift.

C Group (INVERTER):

C1 Group (INVERTER)

C1-01: INVERTER Output Voltage

Main Menu>Programming>ENT>Inverter>ENT

- Use constant C1-01 to change the RMS output voltage of the INVERTER.

C1-02: Bat Low ?V Shut-down

Main Menu>Programming>ENT>Inverter>ENT

- With this setting, one can determine the battery voltage at which level the INVERTER will switch off. This can be useful to prevent drawing too much current from an exhausted battery.
- This voltage level will always lie below the Bat Low ? V Restart (C1-03) level. In fact, changing this level will also change the Bat Low ? V Restart (C1-03) level.
- C1-03=C1-02+offset voltage
  For example: CP-1500-122, when C1-02=9.3V, C1-03=10.9V, offset voltage=1.6V (10.9-9.3), C1-03 will automatically go to 11.6V(10.0+1.6) after C1-02 is changed to 10.0V.

C1-03: Battery Low ? V Restart

Main Menu>Programming>ENT>Inverter>ENT

- This setting forms a pair with Bat Low ? V Shut-down (C1-02). With this setting, one determines the battery voltage at which level the INVERTER will switch on.
- In fact, the parameter which is changed is the difference between Bat Low ? V Shut-down (C1-02) and Bat Low ? V Restart (C1-03). The result of this is that when changing the Bat Low ? V Shut-down (C1-02) level, this level also changes.

C1-04: Power Saving Select

Main Menu>Programming>ENT>Inverter>ENT

- When there is no AC load connected to the CombiPlus, set C1-04=1 (Initial setting) to active the power saving function by reducing the AC output voltage to be 144V for 230V model and to be 72 for 110V model.
- Setting C1-04=0 can disable the auto power saving and the output voltage would be Continuously supplied to the AC Output even when there is no load connected.

C1-05: Power Support Select

Main Menu>Programming>ENT>Inverter>ENT

- Using this constant C1-05, the Power Support feature can be enabled or disabled. Use Power Support to prevent an external circuit breaker to trip when the load on the CombiPlus® is too high.
- If the load exceeds the AC IN Current Limit (B2-05), the CombiPlus® will start inverting and will provide the extra current needed.

※ Note: When Power Support is enabled. C1-05=1 (Initial setting), there is a minimum AC input current limit of approximate 2-3 Amps. Setting a lower limit (B2-05) than this minimum value will result in the minimum limit. (Note: In a parallel system, this limits per CombiPlus®!

Setting	Function
C1-05=0	Power Support Function is disabled.
C1-05=1 (Initial setting)	Power Support Function is enabled.

C1-06: Power Support Level

Main Menu>Programming>ENT>Inverter>ENT

- This setting is a special setting for power Support mode when the CombiPlus® is charging and due to a sudden load, the AC IN current exceeds the AC IN Current Limit (B2-05), the CombiPlus® will switch to power Support mode (when C1-05=1)
- At that moment, the current need is unknown. The CombiPlus® makes an assumption of the magnitude of this current. This assumption is equal to AC IN Current Limit (B2-05) multiplied by this Power Support Level (C1-06). The default factor is two.
- This will prevent the circuit breaker from tripping because current provided by the INVERTER minus the current drawn by the load is always lower than the rating of the circuit breaker. This happens, of course, when the AC IN Current Limit (B2-05) is correctly adjusted to the circuit breaker.
- If for instance in a generator application, the circuit breaker has a higher value than the AC IN Current Limit (B2-05) (Normal load of generator is lower than maximum peak load) and one knows that the load which is switched on always draws a certain current, one can consider to increase this factor (C1-06) to achieve better results with sudden load changes.

Battery Charging

Note: **Settings should only be changed by a qualified engineer.**

- Do not use non-rechargeable batteries.
- Batteries should be placed in a dry and well-ventilated area during charging.

The product default settings are for charging gel batteries. For the recommended battery voltage initial settings, see D1 (Charger) Group parameters

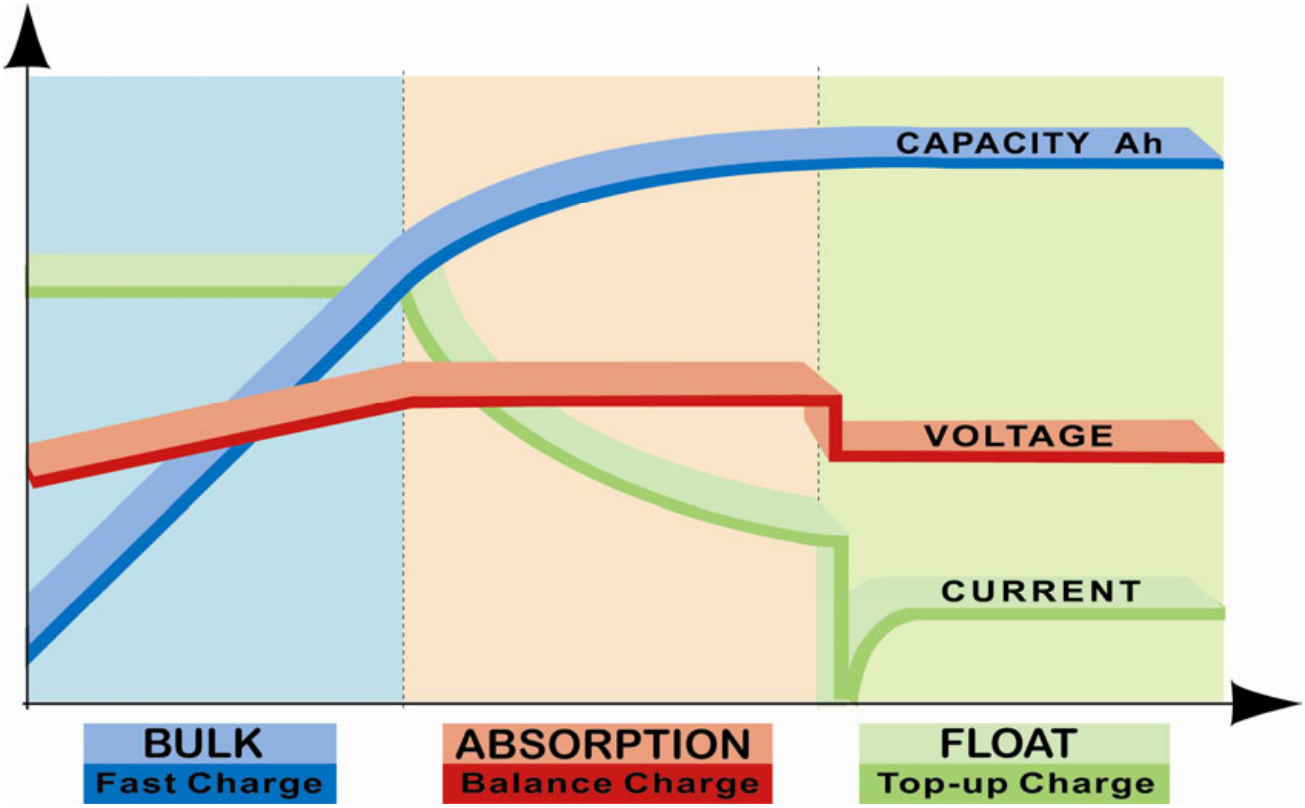

D Group (AC CHARGER):

D1 Group (Charger)

D1-02: Battery Charging Curve

Main Menu>Programming>ENT>Charger>ENT

Setting	Function
D1-02=1	Fixed
D1-02=2	Adaptive
D1-02=3 (Initial setting)	Adaptive + Battery safe

- The Fixed (D1-02=1) charge curve will have a faxed Absorption Time (D1-06).
- The Adaptive (D1-02=2) and Adaptive + Battery safe (D1-02=3) curve derive the Absorption time from the Bulk time. The maximum Absorption time of these charge curves is determined by Absorption Time (D1-06) setting.
- The Adaptive + Battery safe (D1-02=3) curve has a special regulation in the absorption phase. The absorption phase will start when the battery voltage reaches 14.4V(for 12V batteries) regardless of the specified Absorption Voltage (D1-03). During the absorption phase, the voltage will increase with a fixed ramp until the voltage reaches the absorption voltage or the calculated absorption time is over in the latter case, the absorption phase will end before the absorption voltage is reached.

D1-03: Absorption Voltage

Main Menu>Programming>ENT>Charger>ENT

- Use this setting to specify the absorption battery voltage.

D1-04: Repeated Absorption Time

Main Menu>Programming>ENT>Charger>ENT

- Use this setting to specify the duration of the repeated absorption "pulses".

D1-05: Repeated Absorption Interval

Main Menu>Programming>ENT>Charger>ENT

- Use this setting to specify the interval between repeated absorptions intervals.

D1-06: Maximum Absorption Time

Main Menu>Programming>ENT>Charger>ENT

- If the Charge Curve is fixed (D1-02=1), then this setting is used to determine the absorption time.
- In all other cases, this setting determines the maximum absorption time.

D1-07: Float Voltage

Main Menu>Programming>ENT>Charger>ENT

- Use this setting to specify the battery float voltage.

D1-08: Charge Current

Main Menu>Programming>ENT>Charger>ENT

- Use this setting to specify the current with which the battery is charged in the bulk phase.

※ Note: The actual charge current depends on other conditions also. Therefore, under certain circumstances, it is possible that the actual charge current is lower than this setting. This can, among others, be due to:

- A low AC IN Current Limit (B2-05) in combination with a high load.
- A high environmental temperature
- A too high ripple voltage due to improper cabling.

D1-09: Battery Safe Mode "Stop After 10Hr Bulk"

Main Menu>Programming>ENT>Charger>ENT

- The Battery safe setting is designed to shut down the charger when the bulk charging phase lasts more than 10 hours, this can be indication that a battery cell is damaged.
- The absorption voltage (or the 14.4V for battery when Battery Safe (D1-02=3) mode is used) will never be reached in that case and the other cells will be over-charged resulting in the production of an explosive gas.
- Therefore, the charger is disabled if the bulk phase lasts more than 10 hours.
- This setting can be disabled because it does not always indicate a problem when the bulk phase lasts very long. The charge current can be very low due to limited AC input current and/or AC loads. Also, DC loads can "steal away" part of the charge current. In that case, the bulk phase will need more time to complete and this setting must be disabled.

※ Note: When this setting is disabled, there is no safety check against over-charging.

Setting	Function
D1-09=0	Stop After 10Hr Bulk setting is disabled
D1-09=1 (Initial setting)	Stop After 10Hr Bulk setting is enabled

D1-10: Equalize Mode Select (Storage Mode Select)

Main Menu>Programming>ENT>Charger>ENT

- This setting is used for enabling/disabling the Equalize Mode.

Setting	Function
D1-10=0	Equalize mode is disabled
D1-10=1 (Initial setting)	Equalize mode is enabled

E Group (Auxiliary Relay):

E1 Group (Setting Aux-Relay 1 ON Condition)

E1-01: LOAD Higher than ? Amps
E1-02: LOAD Higher for ? sec

Main Menu>Programming>ENT>Aux-Relay>ENT

- Use these settings to switch the Aux-Relay 1 ON. When the actual AC OUT load is above a certain value (E1-01) for a certain time (E1-02).
- The corresponding Aux-Relay 1 OFF condition is
  E2-01: Load Lower than ? Amps and
  E2-02: Load Lower for ? sec.

※ Note: If setting E1-02=0 sec (Initial setting). Then the E1-01 is ignored.

※ Note: If setting E2-02=0 sec (Initial setting). Then the E2-01 is ignored.

E1-03: Udc Lower than ? Voltage
E1-04: Udc Lower for ? sec

Main Menu>Programming>ENT>Aux-Relay>ENT

- Use thse settings to switch the Aux-Relay 1 ON. When battery voltage becomes lower than a certain limit (E1-03) for a certain time (E1-04).

※ Note: If E1-04=0 sec (Initial setting), then E1-03 is ignored.

E1-05: Udc Higher than ? Voltage
E1-06: Udc Higher for ? sec

Main Menu>Programming>ENT>Aux-Relay>ENT

- Use these settings to switch the Aux-Relay 1 ON when battery voltage becomes higher than a certain limit (E1-05) for a certain time (E1-06).

※ Note: If E1-06=0 sec (Initial setting), then E1-05 is ignored.

E1-07: Not Charge for ? sec

Main Menu>Programming>ENT>Aux-Relay>ENT

- Use this setting to switch on the Aux-Relay 1 when the AC CHARGER is not charging for a certain time (E1-07).
- Normally used for generating an alarm situation.

E1-08: Fan ON for ? sec

Main Menu>Programming>ENT>Aux-Relay>ENT

- This will switch the Aux-Relay 1 ON when the internal fan switches on. This can be used together with the E2-08: Fan OFF for ? sec setting to drive an external fan.

E1-09: When bulk protection is activated.

Main Menu>Programming>ENT>Aux-Relay>ENT

- This will set the Aux-Relay1 ON when the "bulk protection" (D1-09=1) is activated. This condition will remain valid as long as the AC CHARGER is disabled due to that safety mechanism. One can use this setting to generate an alarm.

E1-10: System Fault Occurs

Main Menu>Programming>ENT>Aux-Relay>ENT

- This will switch on the Aux-Relay 1 when the CombiPlus® switches off due to an internal alarm situation.

E1-11: Temp. Alarm Select (When E1-12=0, ignore this setting)
E1-12: Temp. Alarm for ? sec

Main Menu>Programming>ENT>Aux-Relay>ENT

- If you want to switch on the Aux-Relay 1 when there is a over temperature alarm, this setting (E1-11) can be used to choose between pre-alarm or normal alarm.
- As with other Aux-Relay 1 settings, a delay value (E1-12) must be specified also. This can be done with Delay value for set Aux-Relay 1 ON when over temperature alarm (E1-12) setting.

E1-13: Low Batt. Alarm Select (When E1-14=0, ignore this setting)
E1-14: Low Batt. Alarm for ? sec

Main Menu>Programming>ENT>Aux-Relay>ENT

- If you want to switch on the Aux-Relay 1 when there is a low battery alarm, this setting (E1-13) can be used to choose between pre-alarm or normal alarm.
- As with other Aux-Relay 1 settings, a delay value (E1-14) must be specified also. This can be done with Delay value for set Aux-relay 1 ON when low battery alarm (E1-14) setting.

E1-15: OverLoad Alarm Select (When E1-16=0, ignore this setting)
E1-16: OverLoad Alarm for ? sec

Main Menu>Programming>ENT>Aux-Relay>ENT

- If you want to switch on the Aux-Relay 1 when there is a OverLoad alarm, this setting (E1-15) can be used to choose between pre-alarm or normal alarm.
- As with other Aux-Relay 1 setting, a delay value (E1-16) must be specified also. This can be done with Delay value for set Aux-Relay 1 ON when overload alarm (E1-16) setting.

E1-17: Udc Ripple Alarm Select (When E1-18=0, ignore this setting)
E1-18: OverLoad Alarm for ? sec

Main Menu>Programming>ENT>Aux-Relay>ENT

- If you want to switch on the Aux-Relay 1 when there is a battery voltage ripple alarm. This setting (E1-17) can be used to choose between pre-alarm or normal alarm.
- As with other Aux-Relay 2, setting a delay value (E1-18) must be specified also. This can be done with Delay value for set Aux-Relay 1 ON when battery voltage ripple alarm (E1-18) setting.

E2 Group (Setting Aux-Relay 1 OFF Condition)

E2-01: Load Lower than ? Amps
E2-02: Load Lower for ? sec

Main Menu>Programming>ENT>Aux-Relay>ENT

- Use these settings to switch Aux-Relay 1 OFF. When the actual AC OUT Load is below a certain value (E2-01) for a certain time (E2-02).
- The corresponding Aux-Relay ON condition is
  E1-01: Load Higher than ? Amps and
  E1-02: Load Higher for ? sec.

※ Note: If setting E2-02 (E1-02)=0 sec (Initial setting), then the E2-01 (E1-01) is ignored.

E2-03: Udc Lower than ? Voltage
E2-04: Udc Lower for ? sec

Main Menu>Programming>ENT>Aux-Relay>ENT

- Use these settings to switch off the Aux-Relay 1 when battery voltage becomes lower than a certain limit (E2-03) for a certain time (E2-04)

※ Note: If E2-04=0 sec (Initial Setting), then E2-03 is ignored.

E2-05: Udc Higher than ? Voltage
E2-06: Udc Higher for ? sec

Main Menu>Programming>ENT>Aux-Relay>ENT

- Use these settings to switch off the Aux-Relay 1 when battery voltage becomes higher than a certain limit (E2-05) for a certain time (E2-06)

※ Note: If E2-06=0 sec (Initial setting), then E2-05 is ignored.

E2-07: Charging for ? sec

Main Menu>Programming>ENT>Aux-Relay>ENT

- This setting switches the Aux-Relay 1 OFF when the AC CHARGER started for a certain time (E2-07). This can be useful when the Aux-Relay 1 is for instance used a low battery alarm.
- Use the Set Udc Lower than ? Voltage (E1-03) setting to start the alarm and use this setting (E2-07) to stop it.

※ Note: As along as the battery voltage is lower than the specified limit (E1-03), the alarm will be active.

E2-08: Fan OFF for ? sec

Main Menu>Programming>ENT>Aux-Relay>ENT

- This will switch the Aux-Relay 1 OFF when the internal fan switches off. This can be used together with the E1-08: Fan ON for ? sec setting to drive an external fan.

E2-09: Charge finished for ? Min (When E2-09=0, ignore this setting)

Main Menu>Programming>ENT>Aux-Relay>ENT

- This condition becomes active when the charge bulk phase is finished for a certain time (E2-09).
- For the charge curve, take a look at for instance the Charge Current (D1-08) setting.
- This is useful when the Aux-Relay 1 is used to start a generator. Once started, one might want to keep the generator on until the batteries are more or less charged.

E2-10: Aux-Relay 1 not ON for ? minutes (When E2-10=0, ignore this setting)

Main Menu>Programming>ENT>Aux-Relay>ENT

- If one does not need special off condition, one can use this setting and the Aux-Relay 1 will switch off automatically when there has been no ON condition for a certain time (E2-10).

E2-11: AC IN loss for ? sec (When E2-11=0, ignore this setting)

Main Menu>Programming>ENT>Aux-Relay>ENT

- This setting will switch off Aux-Relay1 if the RMS value of AC IN voltage is too low for a certain time (E2-11).
- This AC level is determined by the AC IN Low Disconnect (B2-01) setting.
- Use this setting (E2-11) to disable re-starting of a generator which is switched off by hand when the Aux-Relay 1 is used to generate a start signal for that generator.

E2-12: No Temp. Alarm Select (When E2-13=0, ignore this setting)
E2-13: No Temp. Alarm for ? sec

Main Menu>Programming>ENT>Aux-Relay>ENT

- If you want to switch off the Aux-Relay 1 when there is no over temperature alarm, this setting (E2-12) can be used to choose between pre-alarm or normal alarm.
- As with other Aux-Relay 1 setting, a delay value must be specified also. This can be done with the Delay value for set Aux-Relay 1 OFF when No Over temperature Alarm (E2-13) setting.

E2-14: No Low Batt. Alarm Select (When E2-15=0, ignore this setting)
E2-15: No Low Batt Alarm for ? sec

Main Menu>Programming>ENT>Aux-Relay>ENT

- If you want to switch off the Aux-Relay 1 when there is no low battery alarm, this setting (E2-14) can be used to choose between pre-alarm or normal alarm.
- As with other Aux-Relay 1 setting, a delay must be specified also. This can be done with the Delay value for set Aux-Relay 1 OFF when No Low Battery Alarm (E2-15) setting.

E2-16: No OverLoad Alarm Select (When E2-17=0, ignore this setting)
E2-17: No OverLoad Alarm for ? sec

Main Menu>Programming>ENT>Aux-Relay>ENT

- If you want to switch off the Aux-Relay 1 when there is no OverLoad alarm, this setting (E2-16) can be used to choose between pre-alarm or normal alarm.
- As with other Aux-Relay 1 setting, a delay must be specified also. This can be done with the Delay value for set Aux-Relay 1 OFF when No OverLoad Alarm (E2-17) setting.

E2-18: No Udc Ripple Alarm Select (When E2-19=0, ignore this setting)
E2-19: No Udc Ripple Alarm for ? sec

Main Menu>Programming>ENT>Aux-Relay>ENT

- If you want to switch off the Aux-Relay 1 when there is no battery voltage ripple alarm, this setting (E2-18) can be used to choose between pre-alarm or normal alarm.
- As with other Aux-Relay 1 setting, a delay must be specified also. This can be done with the Delay value for set Aux-Relay 1 OFF when No Battery voltage Ripple Alarm (E2-19) setting.

E3 Group (Setting Aux-Relay 2 ON Condition)
E4 Group (Setting Aux-Relay 2 OFF Condition)
E5 Group (Setting Aux-Relay 3 ON Condition)
E6 Group (Setting Aux-Relay 3 OFF Condition)

※ Note: The functions and the settings of E3, E4, E5 and E6 Groups are exactly the same as those of E1 and E2 Group so please refer to above E1 and E2 Group description and setting for E3, E4, E5 and E6 Groups.

E7 Group (Aux-Relay 1 Option)

E7-01: Aux-Relay 1 Usage Select

Main Menu>Programming>ENT>Aux-Relay>ENT

Setting	Function
E7-01=0 (Initial setting)	Auxiliary Relay 1 is not allowed to be active (Idle).
E7-01=1	Auxiliary Relay 1 is allowed to be active.

E7-02: Aux-Relay 1 Invert Select

Main Menu>Programming>ENT>Aux-Relay>ENT

Setting	Function
E7-02=0 (Initial setting)	Auxiliary Relay 1 is normal.
E7-02=1	Auxiliary Relay 1 is Invert switch and that is ON becomes off and OFF becomes ON.

- This is used to invert the Aux-Relay 1 So ON becomes OFF and OFF becomes ON. In the program, the labels are adapted to reflect this inversion.

E7-03: Aux1 not Switch Off Time (Aux-Relay 1 does not switch off with certain period)

Main Menu>Programming>ENT>Aux-Relay>ENT

- Use constant E7-03 to determine the minimum ON time.
- The Aux-Relay 1 will not be switched off within the time specified here measured from the moment that all on condition are inactive.

※ Note: OFF conditions with a delay of 0 minute, ignore this setting.

E8 Group (Aux-Relay 2 Option)

E9 Group (Aux-Relay 3 Option)

※ The functions and the settings of E8 and E9 Groups are exactly the same as those of E7 Group so please refer to above E7 Group description and setting for E8 and E9 Groups.

Chapter 7 User Constants

4.2 The following is the operation flow

Main Menu

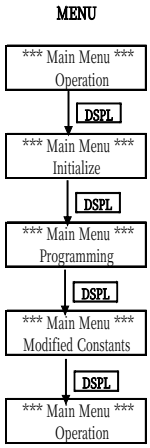

Quick Return Main Menu-Operation

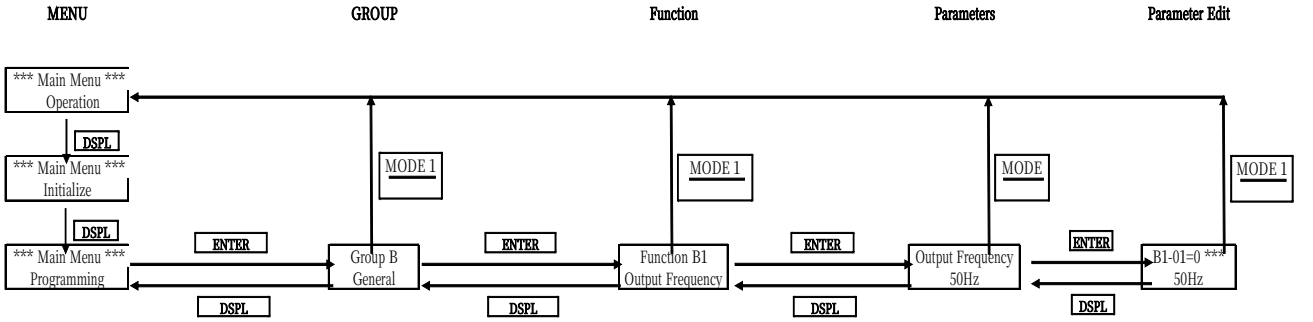

Quick Return Main Menu-Progeamming

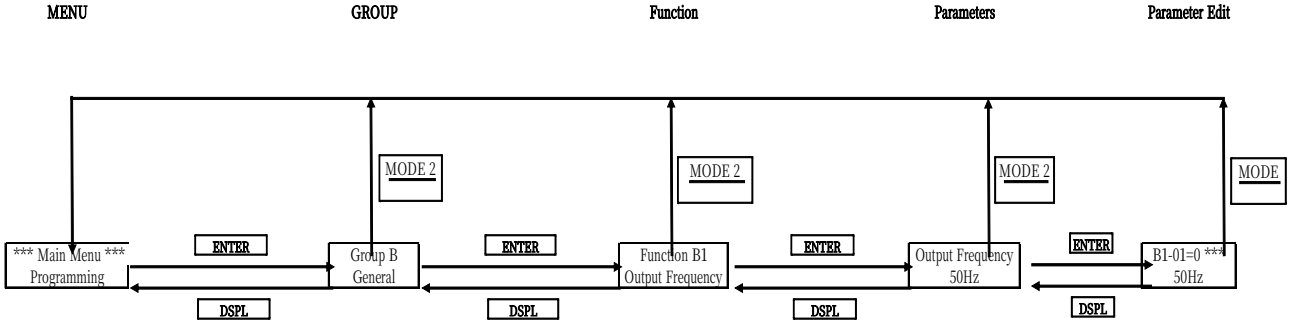

Main Menu : Operation

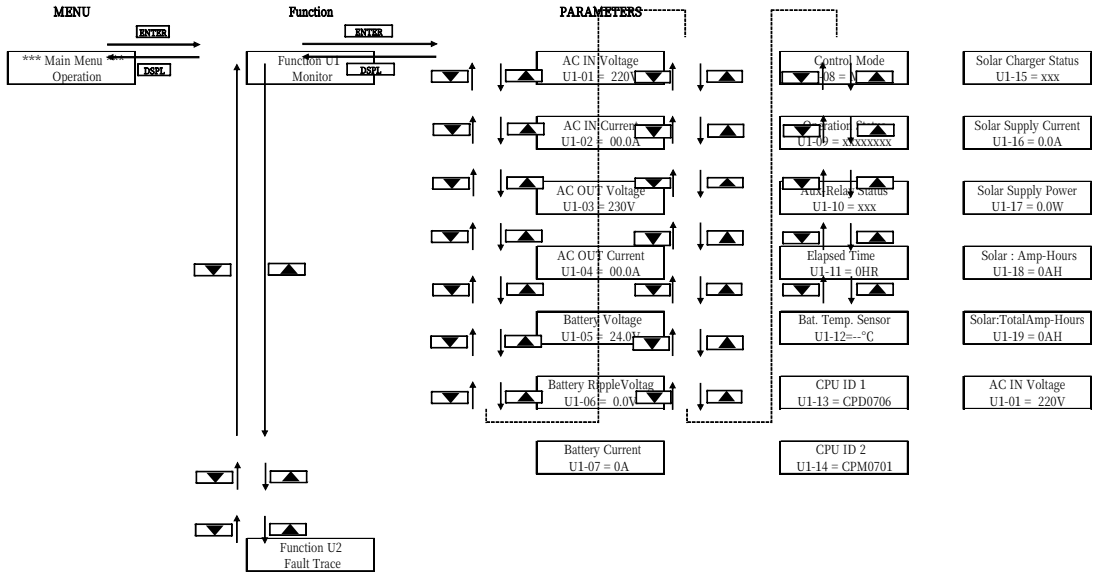

Main Menu : Initialize

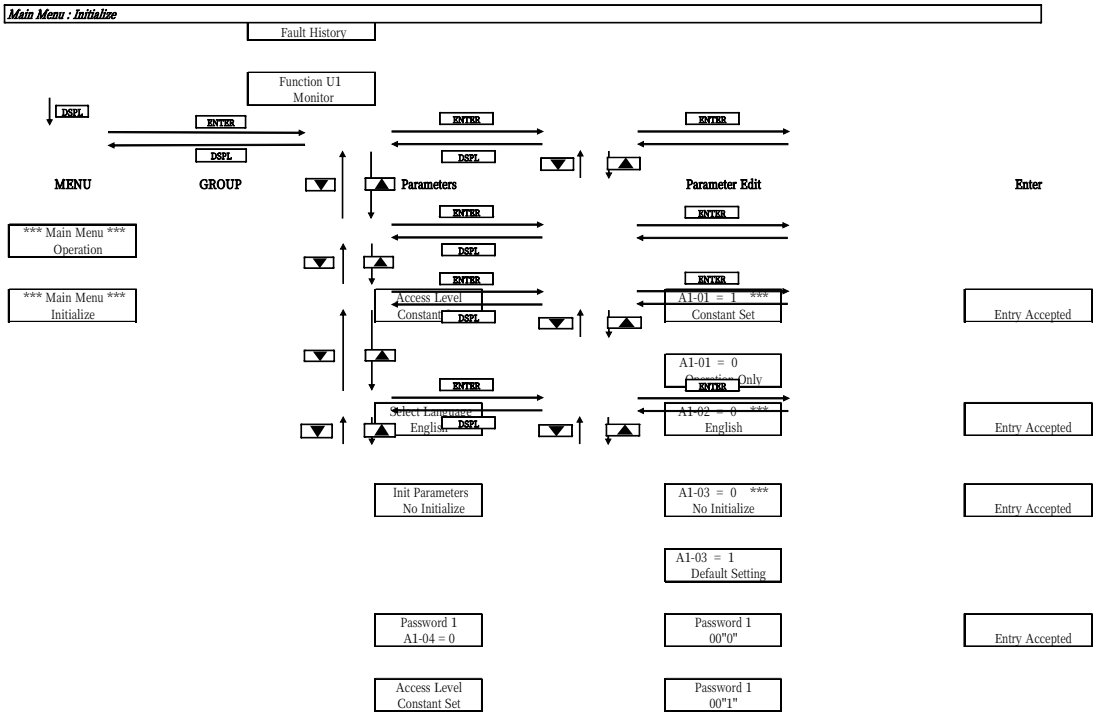

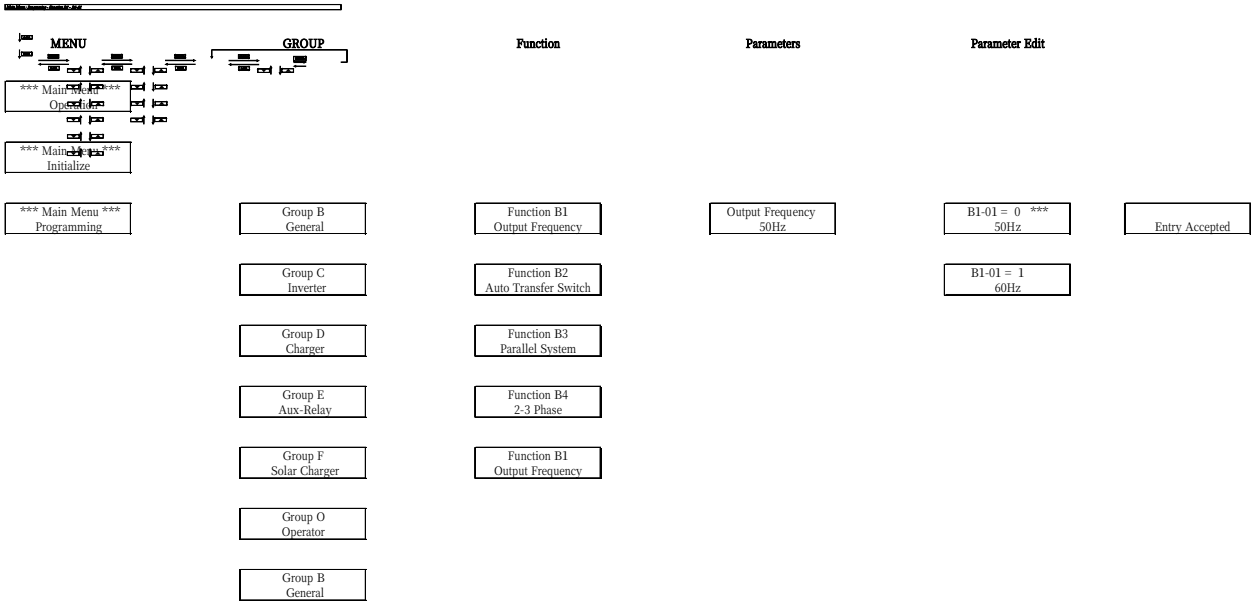
MENU
GROUP
Function
Parameters
Parameter Edit
*** Main Menu ***
Operation
*** Main Menu ***
Initialize
*** Main Menu ***
Programming
Group B
General
Group C
Inverter
Group D
Charger
Group E
Aux-Relay
Group F
Solar Charger
Group O
Operator
Group B
General
Function B1
Output Frequency
Function B2
Auto Transfer Switch
Function B3
Parallel System
Function B4
2-3 Phase
Function B1
Output Frequency
Output Frequency
50Hz
B1-01 = 0 ***
50Hz
B1-01 = 1
60Hz
Entry Accepted

Main Menu : Programing - Function B2 - B2-01

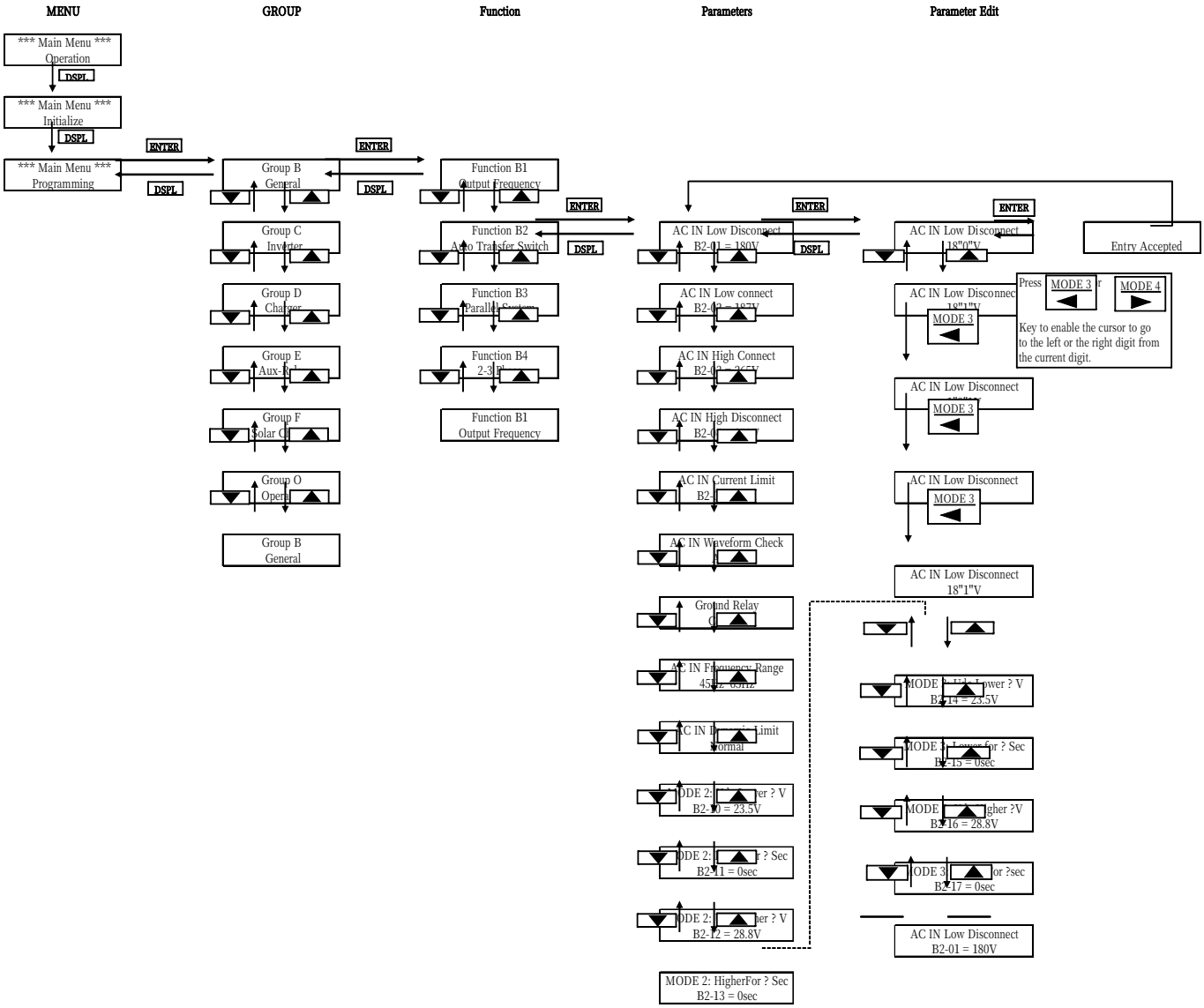

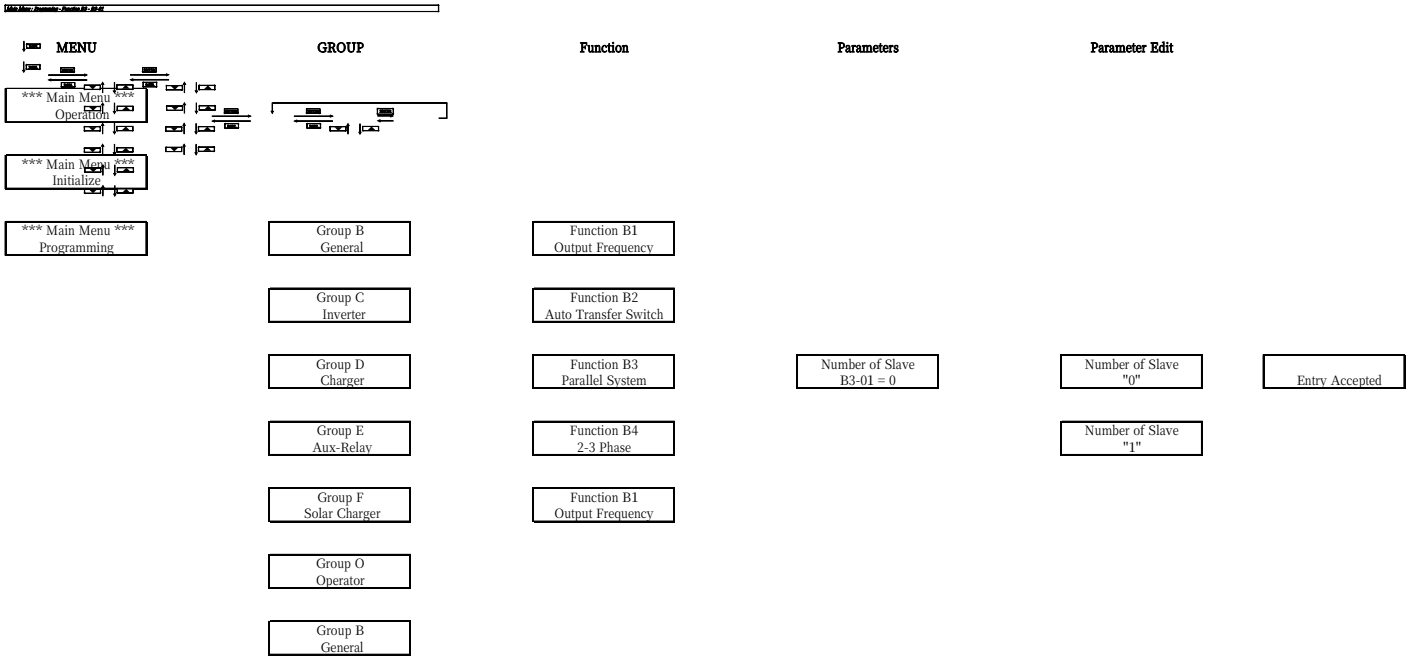
MENU
GROUP
Function
Parameters
Parameter Edit
*** Main Menu ***
Operation
*** Main Menu ***
Initialize
*** Main Menu ***
Programming
Group B
General
Group C
Inverter
Group D
Charger
Group E
Aux-Relay
Group F
Solar Charger
Group O
Operator
Group B
General
Function B1
Output Frequency
Function B2
Auto Transfer Switch
Function B3
Parallel System
Function B4
2-3 Phase
Function B1
Output Frequency
Number of Slave
B3-01 = 0
Number of Slave
"0"
Number of Slave
"1"
Entry Accepted

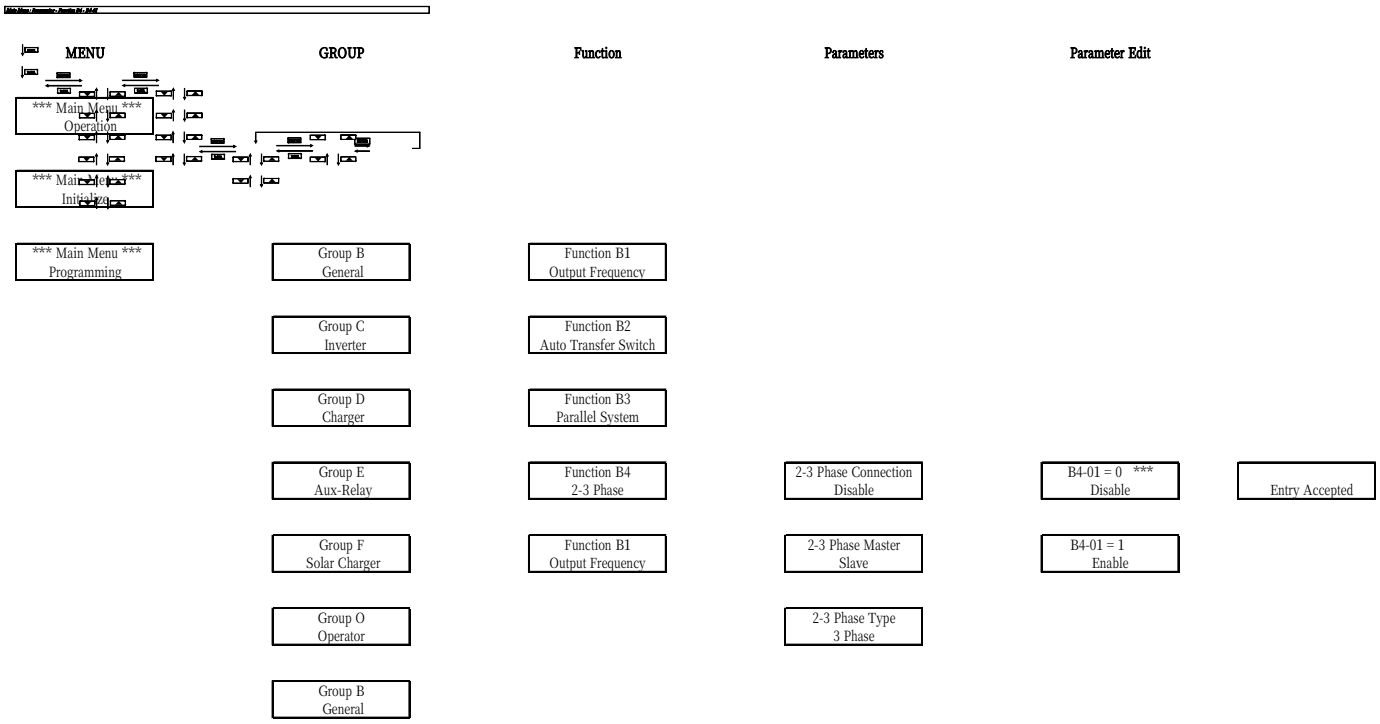
MENU
GROUP
Function
Parameters
Parameter Edit
*** Main Menu ***
Operation
*** Main Menu ***
Initialize
*** Main Menu ***
Programming
Group B
General
Group C
Inverter
Group D
Charger
Group E
Aux-Relay
Group F
Solar Charger
Group O
Operator
Group B
General
Function B1
Output Frequency
Function B2
Auto Transfer Switch
Function B3
Parallel System
Function B4
2-3 Phase
Function B1
Output Frequency
2-3 Phase Connection
Disable
2-3 Phase Master
Slave
2-3 Phase Type
3 Phase
B4-01 = 0 ***
Disable
B4-01 = 1
Enable
Entry Accepted

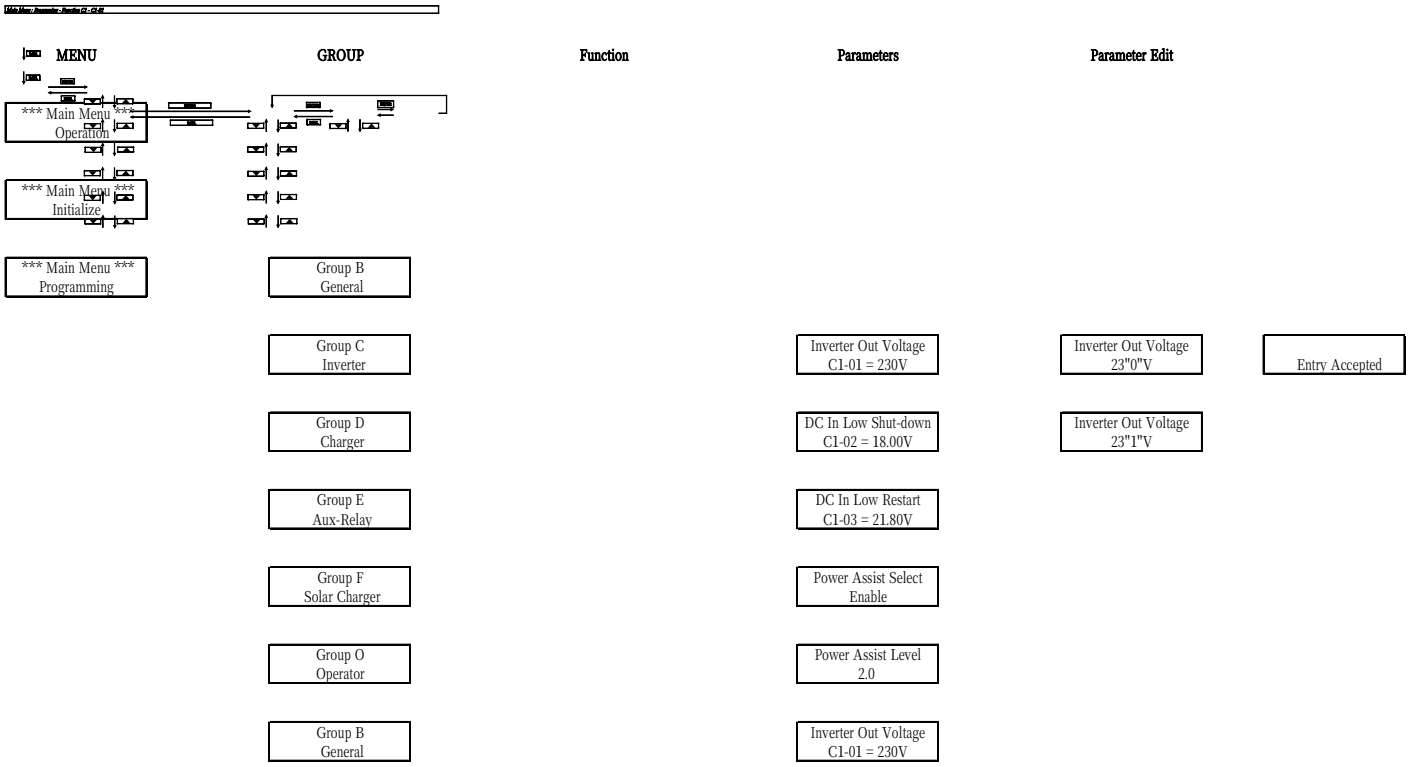
MENU
GROUP
Function
Parameters
Parameter Edit
*** Main Menu ***
Operation
*** Main Menu ***
Initialize
*** Main Menu ***
Programming
Group B
General
Group C
Inverter
Group D
Charger
Group E
Aux-Relay
Group F
Solar Charger
Group O
Operator
Group B
General
Inverter Out Voltage
C1-01 = 230V
DC In Low Shut-down
C1-02 = 18.00V
DC In Low Restart
C1-03 = 21.80V
Power Assist Select
Enable
Power Assist Level
2.0
Inverter Out Voltage
C1-01 = 230V
Inverter Out Voltage
23"0"V
Inverter Out Voltage
23"1"V
Entry Accepted

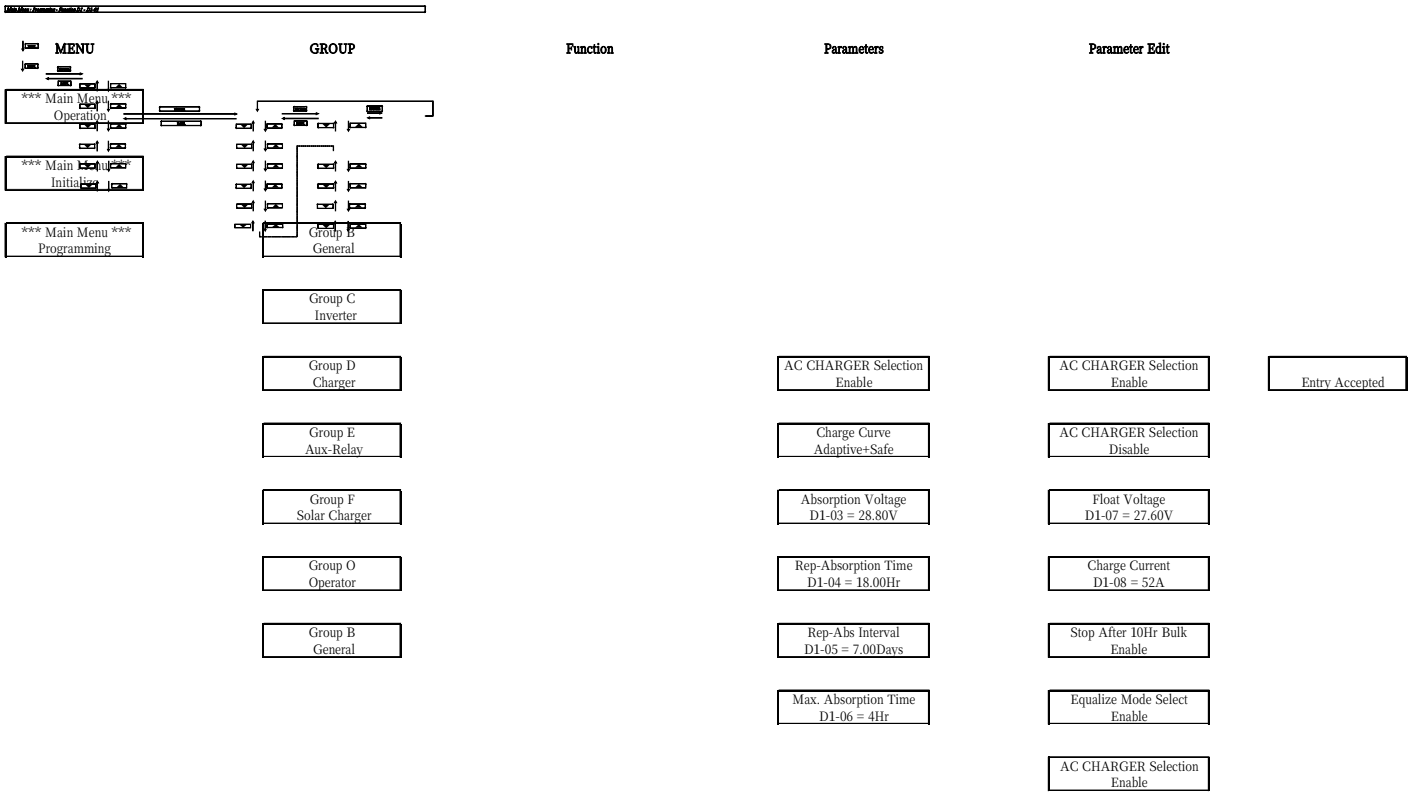
MENU
GROUP
Function
Parameters
Parameter Edit
*** Main Menu ***
Operation
*** Main Menu ***
Initialize
*** Main Menu ***
Programming
Group B
General
Group C
Inverter
Group D
Charger
Group E
Aux-Relay
Group F
Solar Charger
Group O
Operator
Group B
General
AC CHARGER Selection
Enable
Charge Curve
Adaptive+Safe
Absorption Voltage
D1-03 = 28.80V
Rep-Absorption Time
D1-04 = 18.00Hr
Rep-Abs Interval
D1-05 = 7.00Days
Max. Absorption Time
D1-06 = 4Hr
AC CHARGER Selection
Enable
AC CHARGER Selection
Disable
Float Voltage
D1-07 = 27.60V
Charge Current
D1-08 = 52A
Stop After 10Hr Bulk
Enable
Equalize Mode Select
Enable
AC CHARGER Selection
Enable
Entry Accepted

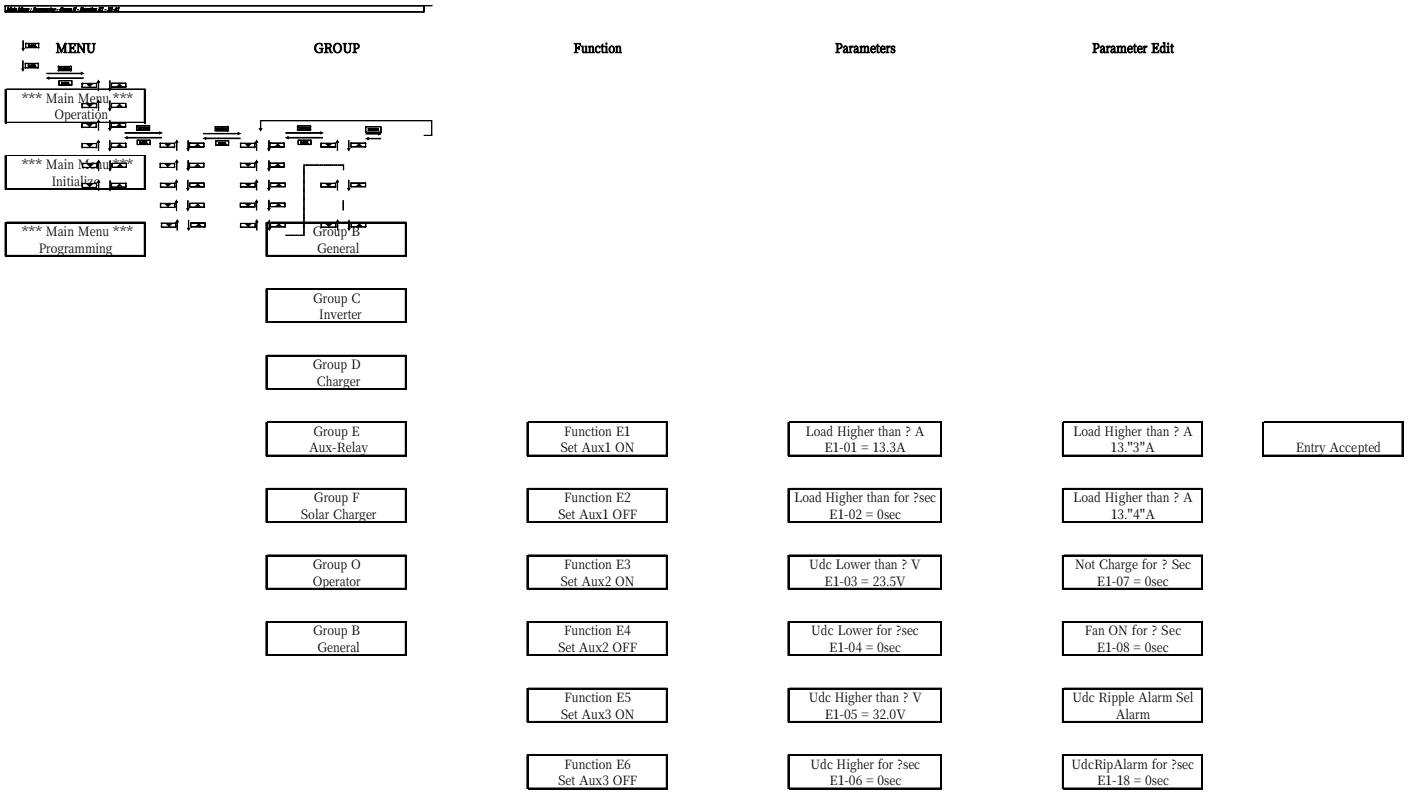
MENU
GROUP
Function
Parameters
Parameter Edit
*** Main Menu ***
Operation
*** Main Menu ***
Initialize
*** Main Menu ***
Programming
Group B
General
Group C
Inverter
Group D
Charger
Group E
Aux-Relay
Group F
Solar Charger
Group O
Operator
Group B
General
Function E1
Set Aux1 ON
Function E2
Set Aux1 OFF
Function E3
Set Aux2 ON
Function E4
Set Aux2 OFF
Function E5
Set Aux3 ON
Function E6
Set Aux3 OFF
Load Higher than ? A
E1-01 = 13.3A
Load Higher than for ?sec
E1-02 = 0sec
Udc Lower than ? V
E1-03 = 23.5V
Udc Lower for ?sec
E1-04 = 0sec
Udc Higher than ? V
E1-05 = 32.0V
Udc Higher for ?sec
E1-06 = 0sec
Load Higher than ? A
13."3"A
Load Higher than ? A
13."4"A
Not Charge for ? Sec
E1-07 = 0sec
Fan ON for ? Sec
E1-08 = 0sec
Udc Ripple Alarm Sel
Alarm
UdcRipAlarm for ?sec
E1-18 = 0sec
Entry Accepted

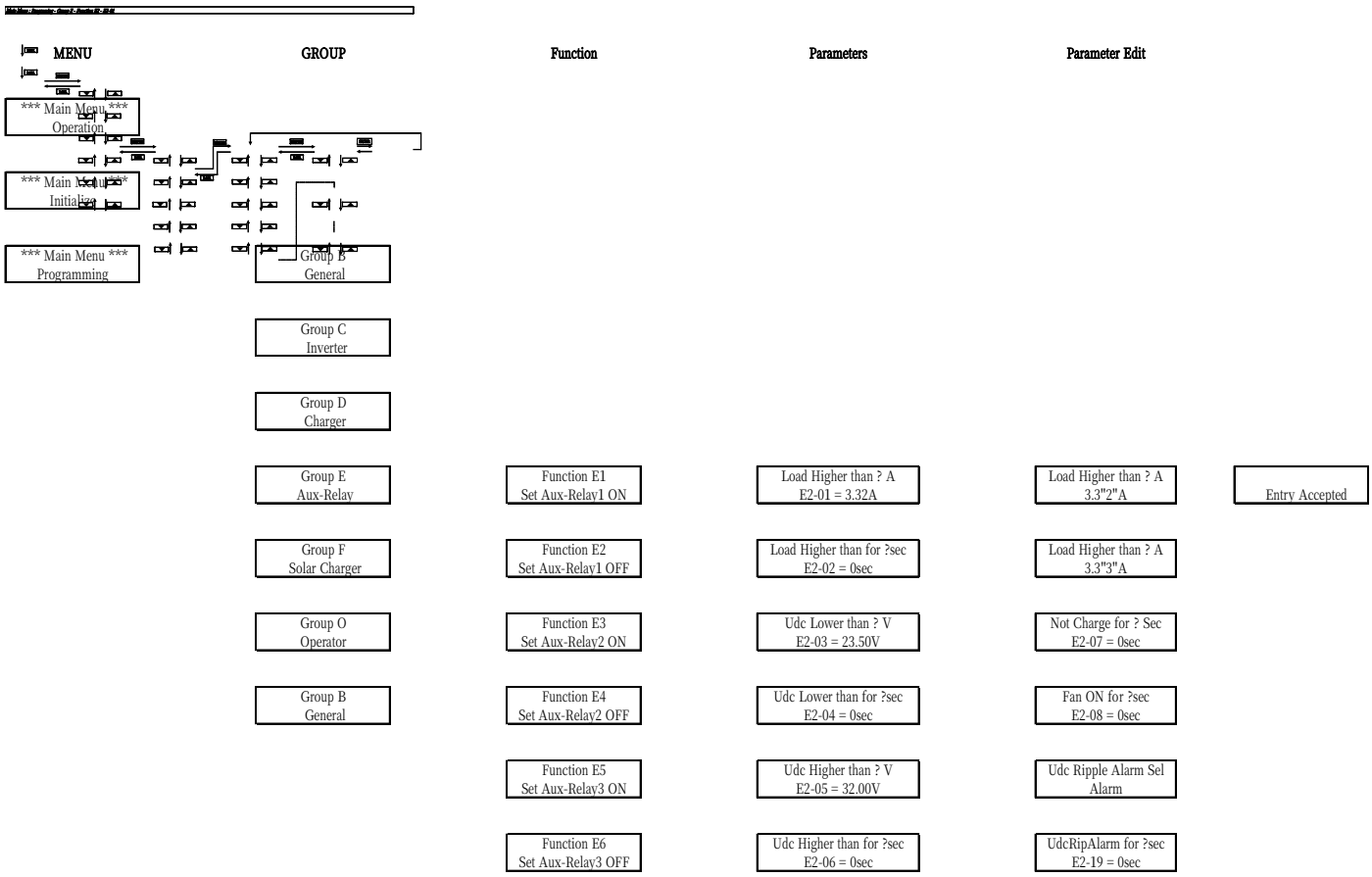
MENU
GROUP
Function
Parameters
Parameter Edit
*** Main Menu ***
Operation
*** Main Menu ***
Initialize
*** Main Menu ***
Programming
Group B
General
Group C
Inverter
Group D
Charger
Group E
Aux-Relay
Group F
Solar Charger
Group O
Operator
Group B
General
Function E1
Set Aux-Relay1 ON
Function E2
Set Aux-Relay1 OFF
Function E3
Set Aux-Relay2 ON
Function E4
Set Aux-Relay2 OFF
Function E5
Set Aux-Relay3 ON
Function E6
Set Aux-Relay3 OFF
Load Higher than ? A
E2-01 = 3.32A
Load Higher than for ?sec
E2-02 = 0sec
Udc Lower than ? V
E2-03 = 23.50V
Udc Lower than for ?sec
E2-04 = 0sec
Udc Higher than ? V
E2-05 = 32.00V
Udc Higher than for ?sec
E2-06 = 0sec
Load Higher than ? A
3.3"2"A
Load Higher than ? A
3.3"3"A
Not Charge for ? Sec
E2-07 = 0sec
Fan ON for ?sec
E2-08 = 0sec
Udc Ripple Alarm Sel
Alarm
UdcRipAlarm for ?sec
E2-19 = 0sec
Entry Accepted

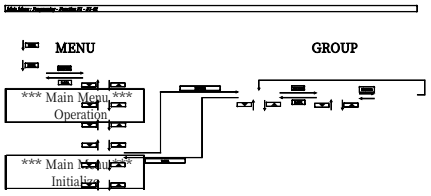

MENU	GROUP	Function	Parameters	Parameter Edit	
*** Main Menu *** Operation					
*** Main Menu *** Initialize					
*** Main Menu *** Programming	Group B General				
	Group C Inverter		Solar Charger Enable Disable	F1-01 = 0 *** Disable	Entry Accepted
	Group D Charger		Reset Amp-Hours NO	F1-01 = 1 Enable	
	Group E Aux-Relay				
	Group F Solar Charger				
	Group O Operator				
	Group B General				

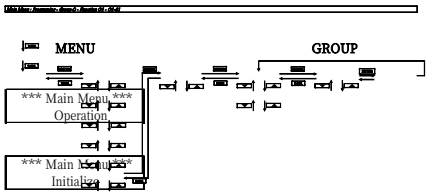

MENU	GROUP	Function	Parameters	Parameter Edit	
*** Main Menu *** Operation					
*** Main Menu *** Initialize					
*** Main Menu *** Programming	Group B General	Function O1 Monitor Select	Power-On Monitor Sel Battery Voltage	O1-01 = 4 *** Battery Voltage	Entry Accepted
	Group C Inverter	Function O2 Key Selections	Key Idle Detect Time O1-02 = 180sec	O1-01 = 5 Battery RippleVoltage	
	Group D Charger		Power-On Monitor Sel Battery Voltage		
	Group E Aux-Relay				
	Group F Solar Charger				
	Group O Operator				
	Group B General				

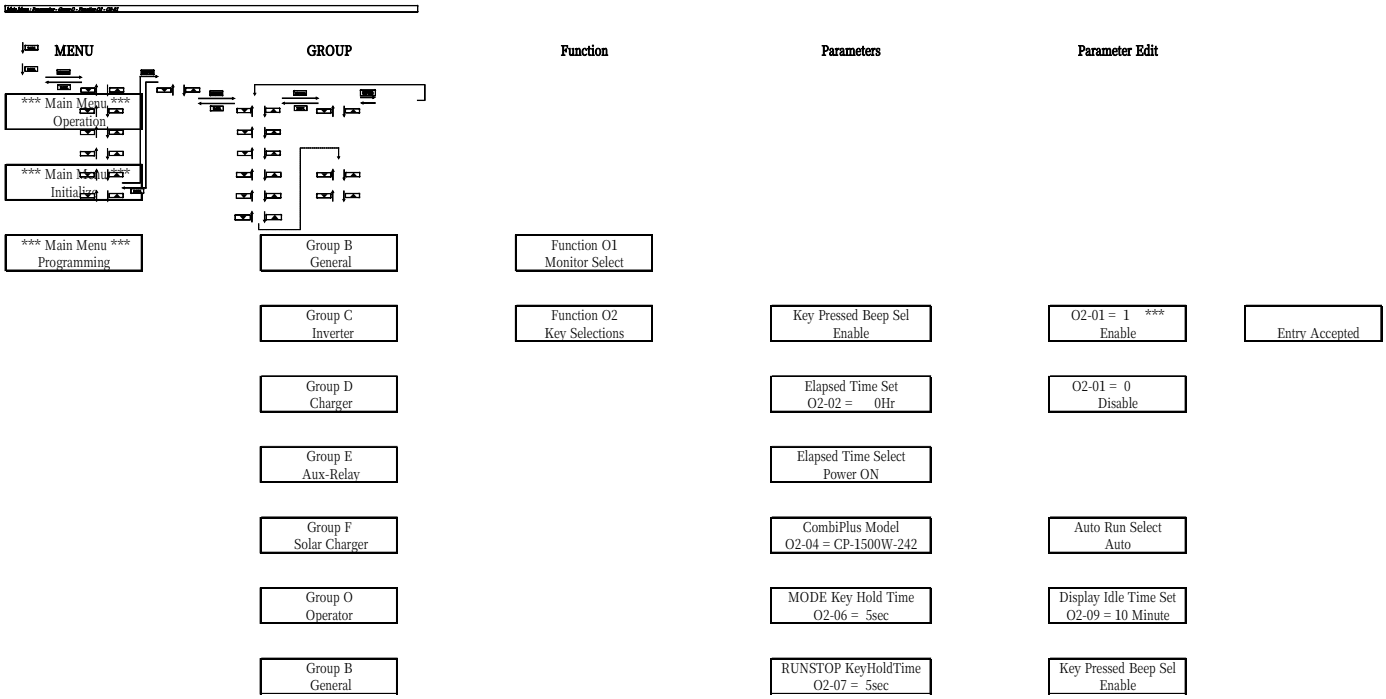
MENU
GROUP
Function
Parameters
Parameter Edit
*** Main Menu ***
Operation
*** Main Menu ***
Initialize
*** Main Menu ***
Programming
Group B
General
Function O1
Monitor Select
Group C
Inverter
Function O2
Key Selections
Key Pressed Beep Sel
Enable
O2-01 = 1 ***
Enable
Entry Accepted
Group D
Charger
Elapsed Time Set
O2-02 = 0Hr
O2-01 = 0
Disable
Group E
Aux-Relay
Elapsed Time Select
Power ON
Group F
Solar Charger
CombiPlus Model
O2-04 = CP-1500W-242
Auto Run Select
Auto
Group O
Operator
MODE Key Hold Time
O2-06 = 5sec
Display Idle Time Set
O2-09 = 10 Minute
Group B
General
RUNSTOP KeyHoldTime
O2-07 = 5sec
Key Pressed Beep Sel
Enable

Chapter 8 Constants list

Menu	Group	Function	Constant	LCD Display	Range	Unit	Factory	Remark	Page

Menu	Group		Function		Constant	LCD Display	Range	Unit	Factory	Remark	Page
Operation	U	Monitor	U1	Monitor	U1-01	AC IN Voltage	—	0.1V	—		46
					U1-02	AC IN Current	—	0.1A	—		46
					U1-03	AC OUT Voltage	—	0.1V	—		46
					U1-04	AC OUT Current	—	0.1A	—		46
					U1-05	Battery Voltage	—	0.1V	—		46
					U1-06	Battery Ripple Volt	—	0.1V	—		46
					U1-07	Battery Current	—	0.1A	—		46
					U1-08	Control Mode	—	—	—		47
					U1-09	Operation Status	—	—	—	NOTE 1	47
					U1-10	Aux-Relay Status	—	—	—	NOTE 2	47
					U1-11	Elapsed Time	—	1hour	—		47
					U1-12	Bat.Temp.Sensor	—	1°C	—		47
					U1-13	CPU ID 1	—	—	—		47
					U1-14	CPU ID 2	—	—	—		48
					U1-15	Solar Charger Status	—	—	—	NOTE 5	48
					U1-16	Solar Supply Current	—	0.1A	—	NOTE 5	48
					U1-17	Solar Supply Power	—	1W	—	NOTE 5	48
					U1-18	Solar Amp-Hours	—	0.1AH	—	NOTE 5	48
					U1-19	Solar Total Amp-Hours	—	0.1AH	—	NOTE 5	48
					U1-35	External ATS Status	—	—	—	—	48
			U2	Fault Trace	U2-01	Current Fault	—	—	—		49
					U2-02	Last Fault	—	—	—		49
					U2-03	AC IN Voltage	—	0.1V	—		49
					U2-04	AC IN Current	—	0.1A	—		49
					U2-05	AC OUT Voltage	—	0.1V	—		49
					U2-06	AC OUT Current	—	0.1A	—		50
					U2-07	Battery Voltage	—	0.1V	—		50
					U2-08	Battery Ripple Volt	—	0.1V	—		50
					U2-09	Battery Current	—	0.1A	—		50
					U2-10	Control Mode	—	—	—		50
					U2-11	Operation Status	—	—	—	NOTE 1	50
					U2-12	Aux-Relay Status	—	—	—	NOTE 2	50
					U2-13	Elapsed Time	—	1hour	—		51
					U2-14	Solar Charger Status	—	—	—	NOTE 5	51

Operation	U	Monitor	U2	Fault Trace	U2-15	Solar Charge Current	—	0.1A	—	NOTE 5	51
					U2-16	Solar Supply Power	—	1W	—	NOTE 5	51
					U2-17	Solar : Amp-Hours	—	1AH	—	NOTE 5	51
					U2-18	Solar:TotalAmp-Hours	—	1AH	—	NOTE 5	51
					U2-26	Bat.Temp. Sensor	—	1°C	—		51
			U3	Fault History	U3-01	Last Fault	—	—	—		52
					U3-02	Fault Message 2	—	—	—		52
					U3-03	Fault Message 3	—	—	—		52
					U3-04	Fault Message 4	—	—	—		52
					U3-05	Elapsed Time 1	—	1hour	—		52
					U3-06	Elapsed Time 2	—	1hour	—		53
					U3-07	Elapsed Time 3	—	1hour	—		53
					U3-08	Elapsed Time 4	—	1hour	—		53
Initialize	A	Initialize	A1	Initialize	A1-01	Access Level	0~1	1	1	0: Operation Only 1: Constant Set	74
					A1-02	Select Language	—	—	0	0:English	75
					A1-03	Init Parameters	0~1	1	0	0: No Initialize 1:Default Setting	75
					A1-04	Password 1	0~999	1	0		76
Programm-ing	B	General	B1	Output Frequency	B1-01	Output Frequency	0~1	1	0	0: 50 Hz 1:60 Hz	77
			B2	Auto Transfer Switch	B2-01	AC IN Low Disconnect	NOTE 3	1V	NOTE 3		78
					B2-02	AC IN Low Connect	NOTE 3	1V	NOTE 3		78
					B2-03	AC IN High Connect	NOTE 3	1V	NOTE 3		78
					B2-04	AC IN High Disconnect	NOTE 3	1V	NOTE 3		79
					B2-05	AC IN Current Limit	NOTE 3	0.1A	NOTE 3		79
					B2-06	AC IN Waveform Check	0~1	1	1	0: Ignore 1: Active	79
					B2-07	Ground Relay	0~1	1	1	0: Disconnect 1: Connect	80
					B2-08	ACIN Frequency Range	0~1	1	1	0:50/60Hz+-5Hz 1:45Hz~65Hz	80
					B2-09	AC IN DynaCur Shift	0~1	1	0	0: Normal 1:Dynamic	89

Menu	Group		Function		Constant	LCD Display	Range	Unit	Factory	Remark	Page
Programming	B	General	B2	Auto Transfer Switch	B2-10	MODE 4: BatLo?V ATS ON	0~32.00 0~16.00	0.01V	23.5V 11.75V		82
					B2-11	MODE 4: BatLo?S ATS ON	0~255	1 sec	10 sec		82
					B2-12	MODE 4: BatHi?V ATSOFF	0~32.0 0~16.0	0.01V	28.8V 14.4V		82
					B2-13	MODE 4: BatHi?S ATSOFF	0~255	1 sec	60 sec		82
					B2-14	MODE 3: BatLo?V ATS ON	0~32.0 0~16.0	0.01V	23.5V 11.75V		82
					B2-15	MODE 3: BatLo?S ATS ON	0~255	1 sec	10 sec		82
					B2-16	MODE 3: BatHi?V ATSOFF	0~32.0 0~16.0	0.01V	28.8V 14.4V		82
					B2-17	MODE 3: BatHi?S ATSOFF	0~255	1 sec	60 sec		82
					B2-18	MODE1:ACINCurrent Lmt	NOTE 3	0.1A	NOTE 3		83
					B2-19	MODE2:ACINCurrent Lmt	NOTE 3	0.1A	NOTE 3		83
					B2-20	MODE3:ACINCurrent Lmt	NOTE 3	0.1A	NOTE 3		83
					B2-21	MODE4:ACINCurrent Lmt	NOTE 3	0.1A	NOTE 3		83
					B2-29	External ATS Select	Disable/ enable	-	Disable		83
			B3	Parallel	B3-01	Number of Slave	0~4	1	0		84
			B4	2-3 Phase	B4-01	2-3 Phase Connection	0~1	1	0	0:Disable 1:Enable	84
					B4-02	2-3 Phase Master	0~1	1	0	0:Slave 1:Master	85
					B4-03	2-3 Phase Type	0~2	1	0	0:3 phase 1: Split phase 180 2: Two Leg phase 120	85
	C	Inverter	C1	Inverter	C1-01	Inverter Out Voltage	NOTE 3	1V	NOTE 3		86
					C1-02	Bat Low ? V Shut-down	NOTE 3	0.01V	NOTE 3		86
					C1-03	Bat Low ? V Restart	NOTE 3	0.01V	NOTE 3		86

Menu	Group		Function		Constant	LCD Display	Range	Unit	Factory	Remark	Page
Programming	C	Inverter	C1	Inverter	C1-04	Auto Power Saving	0~1	1	1	0: Disable 1: Enable	86
					C1-05	Power Support Select	0~1	1	1	0: Disable 1: Enable	87
					C1-06	Power Support Level	1.0~3.5	0.1	2.0		87
	D	Charger	D1	Charger	D1-02	Charge Curve	1~3	1	3	1: Fixed 2: Adaptive 3: Adaptive+safe	89
					D1-03	Absorption Voltage	NOTE 3	0.01V	NOTE 3		90
					D1-04	Rep-Absorption Time	1~72	0.25hour	4	4x0.25=1 hour	90
					D1-05	Rep-Abs Interval	1~180	0.25day	28	28x0.25=7day	90
					D1-06	Max. Absorption Time	1~8	1hour	4hour		90
					D1-07	Float Voltage	NOTE 3	0.01V	NOTE 3		90
					D1-08	Charge Current	NOTE 3	1A	NOTE 3		90
					D1-09	Stop After 10Hr Bulk	0~1	1	1	0:Disable 1:Enable	91
					D1-10	Equalize Mode Select	0~1	1	1	0:Disable 1:Enable	91
	E	Aux-Relay	E1	Set Aux-Relay 1 ON	E1-01	LOAD Higher than ? A	NOTE 3	0.01A	NOTE 3		92
					E1-02	LOAD Higher for ? sec	0~255	1sec	0sec		92
					E1-03	Udc Lower than ? V	NOTE 3	0.01V	NOTE 3		92
					E1-04	Udc Lower for ? sec	0~255	1sec	0sec		92
					E1-05	Udc Higher than ? V	NOTE 3	0.01V	NOTE 3		92
					E1-06	Udc Higher for ? sec	0~255	1sec	0sec		92
					E1-07	Not Charge for ? sec	0~255	1sec	0sec		92
					E1-08	Fan On for ? sec	0~255	1sec	0sec		92
					E1-09	When bulk Protection	0~1	1	0	0:Disable 1:Enable	93
					E1-10	System Fault Occurs	0~1	1	0	0:Disable 1:Enable	93
					E1-11	Temp. Alarm Sel	0~1	1	0	0:Alarm 1:Pre-alarm	93
					E1-12	Temp. Alarm for ?sec	0~255	1sec	0sec		93

Menu	Group		Function		Constant	LCD Display	Range	Unit	Factory	Remark	Page
Programm-ing	E	Aux-Relay	E1	Set Aux-Relay 1 ON	E1-13	Low Batt. Alarm Sel	0~1	1	0	0:Alarm 1:Pre-alarm	93
					E1-14	Low Batt. for ? sec	0~255	1sec	0sec		93
					E1-15	Overload Alarm Sel	0~1	1	0	0:Alarm 1:Pre-alarm	93
					E1-16	OL Alarm for ? sec	0~255	1sec	0sec		93
					E1-17	Udc Ripple Alarm Sel	0~1	1	0	0:Alarm 1:Pre-alarm	94
					E1-18	UdcRipAlarm for ? sec	0~255	1sec	0sec		94
	E	Aux-Relay	E2	Set Aux-Relay 1 OFF	E2-01	Load Lower than ? A	NOTE 3	0.01A	NOTE 3		94
					E2-02	Load Lower for ? sec	0~255	1sec	0sec		94
					E2-03	Udc Lower than ? V	NOTE 3	0.01V	NOTE 3		94
					E2-04	Udc Lower for ? sec	0~255	1sec	0sec		94
					E2-05	Udc Higher than ? V	NOTE 3	0.01V	NOTE 3		94
					E2-06	Udc Higher for ? sec	0~255	1sec	0sec		94
					E2-07	Charging for ? sec	0~255	1sec	0sec		95
					E2-08	Fan Off for ? sec	0~255	1sec	0sec		95
					E2-09	Charge Finished ? Min	0~1000	1min	0		95
					E2-10	RY1 not ON for ? mins	0~1000	1min	0		95
					E2-11	AC IN Loss for ? sec	0~255	1sec	0sec		95
					E2-12	No Temp. Alarm Sel	0~1	1	0	0:Alarm 1:Pre-alarm	96
					E2-13	No Temp. Alarm ? sec	0~255	1sec	0sec		96
					E2-14	No Low Bat. Alarm Sel	0~1	1	0	0:Alarm 1:Pre-alarm	96
					E2-15	No Low Bat for ? sec	0~255	1sec	0sec		96
					E2-16	No OL Alarm Sel	0~1	1	0	0:Alarm 1:Pre-alarm	96
					E2-17	No OL Alarm for ? sec	0~255	1sec	0sec		96
					E2-18	No UdcRipple Alarm Sel	0~1	1	0	0:Alarm 1:Pre-alarm	97
					E2-19	No UdcRipple Alarm ?sec	0~255	1sec	0sec		97

Menu	Group		Function		Constant	LCD Display	Range	Unit	Factory	Remark	Page
Programm-ing	E	Aux-Relay	E3	Set Aux-Relay 2 ON	E3-01	Load Higher than ? A	NOTE 3	0.01A	NOTE 3		97
					E3-02	Load Higher for ?sec	0~255	1sec	0sec		97
					E3-03	Udc Lower than ? V	NOTE 3	0.01V	NOTE 3		97
					E3-04	Udc Lower for ? sec	0~255	1sec	0sec		97
					E3-05	Udc Higher than ? V	NOTE 3	0.01V	NOTE 3		97
					E3-06	Udc Higher for ? sec	0~255	1sec	0sec		97
					E3-07	Not Charge for ? sec	0~255	1sec	0sec		97
					E3-08	Fan On for ? sec	0~255	1sec	0sec		97
					E3-09	When bulk Protection	0~1	1	0	0:Disable 1:Enable	97
					E3-10	System Fault Occurs	0~1	1	0	0:Disable 1:Enable	97
					E3-11	Temp. Alarm Sel	0~1	1	0	0:Alarm 1:Pre-alarm	97
					E3-12	Temp. Alarm for ?sec	0~255	1sec	0sec		6-19
					E3-13	Low Batt. Alarm Sel	0~1	1	0	0:Alarm 1:Pre-alarm	97
					E3-14	Low Batt. for ? sec	0~255	1sec	0sec		97
					E3-15	Overload Alarm Sel	0~1	1	0	0:Alarm 1:Pre-alarm	97
					E3-16	OL Alarm for ? sec	0~255	1sec	0sec		97
					E3-17	Udc Ripple Alarm Sel	0~1	1	0	0:Alarm 1:Pre-alarm	97
					E3-18	UdcRipAlarm for ?sec	0~255	1sec	0sec		97
			E4	Set Aux-Relay 2 OFF	E4-01	Load Lower than ? A	NOTE 3	0.01A	NOTE 3		97
					E4-02	Load Lower for ? sec	0~255	1sec	0sec		97
					E4-03	Udc Lower than ? V	NOTE 3	0.01V	NOTE 3		97
					E4-04	Udc Lower for ? sec	0~255	1sec	0sec		97
					E4-05	Udc Higher than ? V	NOTE 3	0.01V	NOTE 3		97
					E4-06	Udc Higher for ? sec	0~255	1sec	0sec		97
					E4-07	Charging for ? sec	0~255	1sec	0sec		97
					E4-08	Fan OFF for ? sec	0~255	1sec	0sec		97
					E4-09	Charge Finished ?Min	0~1000	1min	0		97
					E4-10	RY2 not ON for ?mins	0~1000	1min	0		97

Menu	Group		Function		Constant	LCD Display	Range	Unit	Factory	Remark	Page
Programm-ing	E	Aux-Relay	E4	Set Aux-Relay 2 OFF	E4-11	AC IN Loss for ?sec	0~255	1sec	0sec		97
					E4-12	No Temp. Alarm Sel	0~1	1	0	0:Alarm 1:Pre-alarm	97
					E4-13	No Temp. Alarm ? sec	0~255	1sec	0sec		97
					E4-14	No Low Bat. Alarm Sel	0~1	1	0	0:Alarm 1:Pre-alarm	97
					E4-15	No Low Bat for ? sec	0~255	1sec	0sec		97
					E4-16	No OL Alarm Sel	0~1	1	0	0:Alarm 1:Pre-alarm	97
					E4-17	No OL Alarm for ? sec	0~255	1sec	0sec		97
					E4-18	No UdcRipple Alarm Sel	0~1	1	0	0:Alarm 1:Pre-alarm	97
					E4-19	No UdcRipple Alarm ?sec	0~255	1sec	0sec		97
			E5	Set Aux-Relay 3 ON	E5-01	Load Higher than ? A	NOTE 3	0.01A	NOTE 3		97
					E5-02	Load Higher for ?sec	0~255	1sec	0sec		97
					E5-03	Udc Lower than ? V	NOTE 3	0.01V	NOTE 3		97
					E5-04	Udc Lower for ? sec	0~255	1sec	0sec		97
					E5-05	Udc Higher than ? V	NOTE 3	0.01V	NOTE 3		97
					E5-06	Udc Higher for ? sec	0~255	1sec	0sec		97
					E5-07	Not Charge for ? sec	0~255	1sec	0sec		97
					E5-08	Fan ON for ? sec	0~255	1sec	0sec		97
					E5-09	When bulk Protection	0~1	1	0	0:Disable 1:Enable	97
					E5-10	System Fault Occurs	0~1	1	0	0:Disable 1:Enable	97
					E5-11	Temp. Alarm Sel	0~1	1	0	0:Alarm 1:Pre-alarm	97
					E5-12	Temp. Alarm for ?sec	0~255	1sec	0sec		97
					E5-13	Low Batt. Alarm Sel	0~1	1	0	0:Alarm 1:Pre-alarm	97
					E5-14	Low Batt. for ? sec	0~255	1sec	0sec		97
					E5-15	Overload Alarm Sel	0~1	1	0	0:Alarm 1:Pre-alarm	97
					E5-16	OL Alarm for ? sec	0~255	1sec	0sec		97

Menu	Group		Function		Constant	LCD Display	Range	Unit	Factory	Remark	Page
Programm-ing	E	Aux-Relay	E5	Set Aux-Relay 3 ON	E5-17	Udc Ripple Alarm Sel	0~1	1	0	0:Alarm 1:Pre-alarm	97
					E5-18	UdcRipAlarm for ?sec	0~255	1sec	0sec		97
			E6	Set Aux-Relay 3 OFF	E6-01	Load Lower than ? A	NOTE 3	0.01A	NOTE 3		97
					E6-02	Load Lower for ? sec	0~255	1sec	0sec		97
					E6-03	Udc Lower than ? V	NOTE 3	0.01V	NOTE 3		97
					E6-04	Udc Lower for ? sec	0~255	1sec	0sec		97
					E6-05	Udc Higher than ? V	NOTE 3	0.01V	NOTE 3		97
					E6-06	Udc Higher for ? sec	0~255	1sec	0sec		97
					E6-07	Charging for ? sec	0~255	1sec	0sec		97
					E6-08	Fan OFF for ? sec	0~255	1sec	0sec		97
					E6-09	Charge Finished ?Min	0~1000	1min	0		97
					E6-10	RY3 not ON for ?mins	0~1000	1min	0		97
					E6-11	AC IN Loss for ?sec	0~255	1sec	0sec		97
					E6-12	No Temp. Alarm Sel	0~1	1	0	0:Alarm 1:Pre-alarm	97
					E6-13	No Temp. Alarm ? sec	0~255	1sec	0sec		97
					E6-14	No Low Bat. Alarm Sel	0~1	1	0	0:Alarm 1:Pre-alarm	97
					E6-15	No Low Bat for ? sec	0~255	1sec	0sec		97
					E6-16	No OL Alarm Sel	0~1	1	0	0:Alarm 1:Pre-alarm	97
					E6-17	No OL Alarm for ? sec	0~255	1sec	0sec		97
					E6-18	No UdcRipple Alarm Sel	0~1	1	0	0:Alarm 1:Pre-alarm	97
					E6-19	No UdcRipple Alarm ?sec	0~255	1sec	0sec		97
			E7	Aux-Relay 1 Option	E7-01	Aux1 Usage Select	0~1	1	0	0:Do not use Aux 1: Use Aux	98
					E7-02	Aux1 Invert Select	0~1	1	0	0: Normal 1: Invert switch	98
					E7-03	Aux1 notSwitchOff T	0~1000	1 min	0		98

Menu	Group		Function		Constant	LCD Display	Range	Unit	Factory	Remark	Page
Programm-ing	E	Aux-Relay	E8	Aux-Relay 2 Option	E8-01	Aux2 Usage Select	0~1	1	0	0:Do not use Aux 1: Use Aux	98
					E8-02	Aux2 Invert Select	0~1	1	0	0: Normal 1: Invert switch	98
					E8-03	Aux2 notSwitchOff T	0~1000	1 min	0		98
			E9	Aux-Relay 3 Option	E9-01	Aux3 Usage Select	0~1	1	0	0:Do not use Aux 1: Use Aux	98
					E9-02	Aux3 Invert Select	0~1	1	0	0: Normal 1: Invert switch	98
					E9-03	Aux3 notSwitchOff T	0~1000	1 min	0		98
	F	Solar Charger	F1	Solar Charger	F1-01	Solar Charger Enable	0~1	1	1	0: Disable 1: Enable NOTE 5	—
					F1-02	Reset Amp-Hours	0~1	1	0	0: No 1: Yes NOTE 5	—
					F1-03	Solar Monitor Sel	0~10	1	0	0: Sum of display 1~10: independent display NOTE 5	—
	O	Operator	O1	Monitor Select	O1-01	Power-ON Monitor Sel	0~18	1	4	NOTE 4	43
					O1-02	Key Idle Detect Time	10~600	1sec	180 sec		43
			O2	Key Selections	O2-01	Key Pressed Beep Sel	0~1	1	1	0:Disable 1:Enable	44
					O2-02	Elapsed Time Reset	0~60000	1hour	0		44
					O2-03	Elapsed Time Select	0~1	1	0	0:Power ON 1: Run Time	44
					O2-04	CombiPlus® Model	—	—	—		44
					O2-06	MODE Key Hold Time	2~10	1sec	5 sec		44
					O2-07	RUN/STOP KeyHoldTime	2~10	1sec	2 sec		45
					O2-08	Auto Run Select	0~1	1	1	0: Manual 1: Auto	45
					O2-09	Display IdleTime Set	0~60	1min	10 min		45

NOTE 1:

Operation Status

U1-09 = X X X X X X X X X X X X

Fault:
0=OK
1=Fault

Udc ripple:
0=OK
1=Udc-ripple Pre-alarm

OL:
0=OK
1=Over load pre-alarm

Battery Low:
0=OK
1=Battery low pre-alarm

OH:
0=OK
1=OH Pre-alarm

Remoter:
0=Remoter disconnect
1=Remoter connect

AC OUT:
0=No output
1=output

AC IN:
0=AC IN disconnect
1=AC IN connect

ATS:
0=OFF
1=ON

AC CHARGER:
0=OFF
1=ON

Inverter:
0=OFF
1=ON

RUN/STOP:
0=STOP
1=RUN

NOTE 2:

U1-10 = X X X

Aux-Relay1:
0=OFF
1=ON

Aux-Relay2:
0=OFF
1=ON

Aux-Relay3:
0=OFF
1=ON

NOTE 3:

Constant / Model	B2-01			B2-02			B2-03			B2-04		
	Range	Unit	Factory Setting	Range	Unit	Factory Setting	Range	Unit	Factory Setting	Range	Unit	Factory Setting
CP-1500-122	180~230	1V	180V	181~231	1V	187V	229~269	1V	265V	230~270	1V	270V
CP-3000-122	180~230	1V	180V	181~231	1V	187V	229~269	1V	265V	230~270	1V	270V
CP-1500-242	180~230	1V	180V	181~231	1V	187V	229~269	1V	265V	230~270	1V	270V
CP-3000-242	180~230	1V	180V	181~231	1V	187V	229~269	1V	265V	230~270	1V	270V
CP-1500-121	94~120	1V	94V	95~121	1V	101V	119~142	1V	138V	120~143	1V	143V
CP-3000-121	94~120	1V	94V	95~121	1V	101V	119~142	1V	138V	120~143	1V	143V
CP-1500-241	94~120	1V	94V	95~121	1V	101V	119~142	1V	138V	120~143	1V	143V
CP-3000-241	94~120	1V	94V	95~121	1V	101V	119~142	1V	138V	120~143	1V	143V

Constant / Model	B2-05			C1-01			C1-02			C1-03		
	Range	Unit	Factory Setting	Range	Unit	Factory Setting	Range	Unit	Factory Setting	Range	Unit	Factory Setting
CP-1500-122	1.0~16.0	0.1A	16.0A	210~245	1V	230V	9.3~13.0	0.01V	9.3V	10.9~17.0	0.01V	10.9V
CP-3000-122	2.0~32.0	0.1A	32.0A	210~245	1V	230V	9.3~13.0	0.01V	9.3V	10.9~17.0	0.01V	10.9V
CP-1500-242	1.0~16.0	0.1A	16.0A	210~245	1V	230V	18.6~26.0	0.01V	18.6V	21.8~34.0	0.01V	21.8V
CP-3000-242	2.0~32.0	0.1A	32.0A	210~245	1V	230V	18.6~23.0	0.01V	18.6V	21.8~34.0	0.01V	21.8V
CP-1500-121	2.0~30.0	0.1A	30.0A	94~128	1V	120V	9.3~13.0	0.01V	9.3V	10.9~17.0	0.01V	10.9V
CP-3000-121	4.0~60.0	0.1A	60.0A	94~128	1V	120V	9.3~13.0	0.01V	9.3V	10.9~17.0	0.01V	10.9V
CP-1500-241	2.0~30.0	0.1A	30.0A	94~128	1V	120V	18.6~26.0	0.01V	18.6V	21.8~34.0	0.01V	21.8V
CP-3000-241	4.0~60.0	0.1A	60.0A	94~128	1V	120V	18.6~23.0	0.01V	18.6V	21.8~34.0	0.01V	21.8V

Constant / Model	D1-03			D1-07			D1-08			E1-01,E3-01,E5-01		
	Range	Unit	Factory Setting	Range	Unit	Factory Setting	Range	Unit	Factory Setting	Range	Unit	Factory Setting
CP-1500-122	12.0~16.0	0.01V	14.40V	12.0~16.0	0.01V	13.80V	0~70	1A	35A	0~29.3	0.01A	6.65A
CP-3000-122	12.0~16.0	0.01V	14.40V	12.0~16.0	0.01V	13.80V	0~140	1A	70A	0~58.6	0.01A	13.30A
CP-1500-242	24.0~32.0	0.01V	28.80V	24.0~32.0	0.01V	27.60V	0~35	1A	17A	0~29.3	0.01A	6.65A
CP-3000-242	24.0~32.0	0.01V	28.80V	24.0~32.0	0.01V	27.60V	0~70	1A	35A	0~58.6	0.01A	13.30A
CP-1500-121	12.0~16.0	0.01V	14.40V	12.0~16.0	0.01V	13.80V	0~70	1A	35A	0~44.7	0.01A	12.75A
CP-3000-121	12.0~16.0	0.01V	14.40V	12.0~16.0	0.01V	13.80V	0~140	1A	70A	0~113.0	0.01A	25.5A
CP-1500-241	24.0~32.0	0.01V	28.80V	24.0~32.0	0.01V	27.60V	0~35	1A	17A	0~44.7	0.01A	12.75A
CP-3000-241	24.0~32.0	0.01V	28.80V	24.0~32.0	0.01V	27.60V	0~70	1A	35A	0~113.0	0.01A	25.5A

Constant / Model	E1-03,E3-03,E5-03			E1-05,E3-05,E5-05			E2-01,E4-01,E6-01			E2-03,E4-03,E6-03		
	Range	Unit	Factory Setting	Range	Unit	Factory Setting	Range	Unit	Factory Setting	Range	Unit	Factory Setting
CP-1500-122	0~17.5	0.01V	11.75V	0~17.5	0.01V	16.0V	0~29.3	0.01A	1.66A	0~17.5	0.01V	11.75V
CP-3000-122	0~17.5	0.01V	11.75V	0~17.5	0.01V	16.0V	0~42.6	0.01A	3.32A	0~17.5	0.01V	11.75V
CP-1500-242	0~35.0	0.01V	23.5V	0~35.0	0.01V	32.0V	0~29.3	0.01A	1.66A	0~35.0	0.01V	23.5V
CP-3000-242	0~35.0	0.01V	23.5V	0~35.0	0.01V	32.0V	0~42.6	0.01A	3.32A	0~35.0	0.01V	23.5V
CP-1500-121	0~17.5	0.01V	11.75V	0~17.5	0.01V	16.0V	0~44.75	0.01A	3.18A	0~17.5	0.01V	11.75V
CP-3000-121	0~17.5	0.01V	11.75V	0~17.5	0.01V	16.0V	0~83.0	0.01A	6.37A	0~17.5	0.01V	11.75V
CP-1500-241	0~35.0	0.01V	23.5V	0~35.0	0.01V	32.0V	0~44.75	0.01A	3.18A	0~35.0	0.01V	23.5V
CP-3000-241	0~35.0	0.01V	23.5V	0~35.0	0.01V	32.0V	0~83.0	0.01A	6.37A	0~35.0	0.01V	23.5V

Constant / Model	E2-05,E4-05,E6-05		
	Range	Unit	Factory Setting
CP-1500-122	0~17.5	0.01V	16.0V
CP-3000-122	0~17.5	0.01V	16.0V
CP-1500-242	0~35.0	0.01V	32.0V
CP-3000-242	0~35.0	0.01V	32.0V
CP-1500-121	0~17.5	0.01V	16.0V
CP-3000-121	0~17.5	0.01V	16.0V
CP-1500-241	0~35.0	0.01V	32.0V
CP-3000-241	0~35.0	0.01V	32.0V

NOTE 4:

Parameter	Setting	LCD Display
O1-01=	0	AC IN Voltage
	1	AC IN Current
	2	AC OUT Voltage
	3	AC OUT Current
	4	Battery Voltage
	5	Battery Ripple Volt
	6	Battery Current
	7	Control Mode
	8	Operation Status
	9	Aux-Relay Status
	10	Elapsed Time
	11	Bat.Temp.Sensor
	12	CPU ID 1
	13	CPU ID 2
	14	Solar Charger Status
	15	Solar Supply Current
	16	Solar Supply Power
	17	Solar Amp-Hours
	18	Solar Total A/Hours

NOTE 5:

The constants marked with NOTE 5 are only visible when extension port (Port C) is connected. After power on, the CombiPlus® will start to scan each built-in module and extension module. The constants marked with NOTE 5 will be visible only when the extension port (Port C) is connected with extension module.

A1-04=Password 1

Lock the constants setting (A1-01=1)

6. Finish setting all the programmable parameters to desired values.
7. Change A1-01=0 (Operation only), factory setting is A1-01=1 (Constants set).
8. Go to A1-04 and press RUN/STOP key and UP key at the same time till A1-05 parameter occurs.
9. Enter the desired password (max. 4 digits)
10. Press UP key to leave A1-05

    Above procedure completes locking the constants setting and no more programming selection would appear. A1-01 would only display 0 (Operation only) and would not display 1 (Constants set).

Unlock the constants setting

3. Enter the password in A1-04 to be exactly the same as the one earlier set in A1-05
4. When the password in A1-04 matches the one earlier set in A1-05, the unlocking is completed. A1-01=1 (Constants set) would appear again for programming.

Chapter 9 Trouble Shooting

- Proceed as follows for a quick detection of common faults.
- DC loads must be disconnected from the batteries and the AC loads must be disconnected from the INVERTER before the INVERTER and/or battery charger (AC CHARGER) is tested.
- Consult your Rich Electric dealer if the fault cannot be resolved.

Problem/Error message	Possible Cause	Solution
The "CombiPlus®" fails to operate when power on.	The battery voltage is too high or too low.	Ensure that the battery voltage is within the correct value range.
'Udc-UV' Battery under volt ' ': blink	The battery voltage is low.	Charge the battery or check the battery connections.
Udc-UV Battery under volt	The "CombiPlus®" cuts out because the battery voltage is too low.	Charge the battery or check the battery connections.
'OL' Inverter OverLoad ' ': blink	The load on the inverter of "CombiPlus®" is higher than the normal load.	Reduce the load.
OL Inverter OverLoad	"CombiPlus®" cuts out due to excessive load. Or "CombiPlus®" has been Over Loaded and caused Internal Damage.	Reduce the load. If Overload warning does not reset after restart the "CombiPlus®" will need to be sent to service for repair.
'OH' Heatsink Max Temp. ' ': blink	The ambient temperature is too high, or the load is excessive.	Place the "CombiPlus®" in a cool and well-ventilated room, or reduce the load.

OH Heatsink Max Temp.	The ambient temperature is too high, or the load is excessive.	Place the “CombiPlus®” in a cool and well-ventilated room, or reduce the load.
‘Udc-ripple’ Volt Ripple Exceeds ‘ ’: blink	Voltage ripple on the DC input exceeds 1.25Vrms	Check the battery cables and terminals. Check the battery capacity; increase it if necessary.
Udc-ripple Volt Ripple Exceeds	The INVERTER of “CombiPlus®” cuts out as a result of excessive voltage ripple on the DC input	Install batteries with a higher capacity. Use shorter and/or thicker battery cables and reset the CombiPlus® (Power OFF and ON again).
‘Udc-OV’ Battery over voltage. ‘ ’: blink	Battery charger is not in normal charging status to cause battery voltage too high.	“CombiPlus®” will need to be sent to service for repair.
Udc-OV Battery over voltage.	Incorrect battery voltage connection (12V system but connected to 24V battery)	Recheck if the CombiPlus® and the battery voltage is matched.
‘Idc-OC’ Over current. ‘ ’: blink	The actual charge current is 1.5 times larger than the set current value (D1-08) when AC CHARGER is operating.	Stop the Charge mode of the “CombiPlus®”.
Idc-OC Over current.		“CombiPlus®” will need to be sent to service for repair.

'Bat-NG' Battery Fault ' ': blink Bat-NG Battery Fault	The charging time of AC CHARGER has been over 10 hours and remains in Bulk Charge mode. (D1-09=1) shows the battery is at fault.	Replace the battery banks.
The charger is not functioning	The AC IN voltage or frequency is out of range.	Ensure that the AC IN voltage is within the range 220V system: 180VAC~260VAC 110V system: 90VAC~130VAC And that the frequency matches the setting.
	"CombiPlus®" internal circuit breaker has tripped.	Reset the internal circuit breaker.
The battery is not being charged fully.	Incorrect charging current.	Set the charging current at between (0.1~0.2)X battery capacity.
	A defective battery connection.	Check the battery terminals.
	The absorption voltage has been set to an incorrect value.	Adjust the absorption voltage to the correct value.
	The float voltage has been set to an incorrect value.	Adjust the float voltage to the correct value.
	The internal DC fuse is defective	"CombiPlus®" will need to be set to service for repair.

The battery is overcharged.	The absorption voltage has been set to an incorrect value.	Adjust the absorption voltage to the correct value.
	The float voltage has been set to an incorrect value.	Adjust the float voltage to the correct value.
The battery is overcharged.	The battery is too small.	Reduce the charging current or use a battery with a higher capacity.
	A defective battery.	Replace the battery.
	The battery is too hot.	Connect a Battery Temperature Sensor (BTS-3)
Battery charge current drop to 0 A when the absorption voltage is reached.	Battery over temperature (> 50℃)	1. Allow battery to cool Down. 2. Place battery in a cool Environment. 3. Check for shorted cells.
	Battery Temperature Sensor (BTS-3) is faulty	1. Unplug Battery Temperature Sensor (BTS-3) from "CombiPlus®" and power off the "CombiPlus®" then wait 5 seconds and Power on again. 2. If the "CombiPlus®" AC CHARGE normally, the BTS-3 is faulty and needs to be replaced.

NOTES: