MS-175A ver:0A

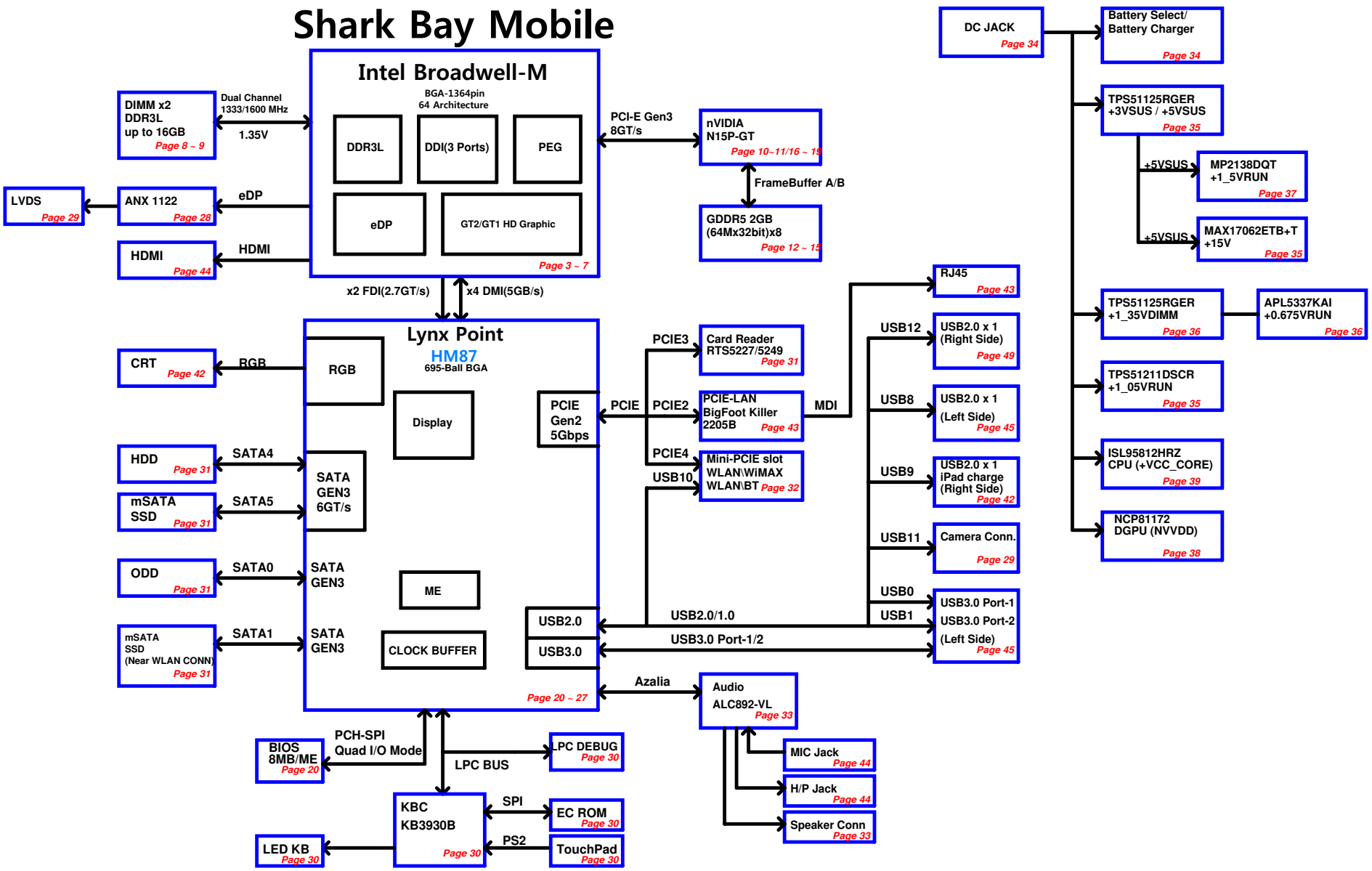

Title	Block Diagram		
Size: Custom	Document Number: MS-175A1		Rev: 11
Date: Monday, January 06, 2014	Sheet 1 of 59		

SCHEMATIC ANNOTATIONS AND BOARD INFORMATION

Voltage Rails

Voltage	Description	Control Signal
PWR_SRC	AC ADAPTER OR BATTERY IN	
+5VALW	5.0V always on power rail	PWR_SRC
+3VALW	3.3V always on power rail	PWR_SRC
+5VSUS	5.0V power rail	SUS_ON
+3VSUS	3.3V power rail	SUS_ON
+1_35VDIMM	1.35V DDR3L power rail (off in S4-S5)	PM_SLP_S4#
+0_675VRUN	0.675V DDR3L Termination voltage (off in S3-S5)	PM_SLP_S3#
+5VRUN	5.0V switched power rail (off in S3-S5)	PM_SLP_S3#
+3VRUN	3.3V switched power rail (off in S3-S5 / M0)	PM_SLP_S3#
+1_5VRUN	1.5V switched power rail (off in S3-S5)	PM_SLP_S3#
+VCC_CORE	1.8V Core Voltage for Processor	VR_ON
+1_05VRUN	1.05V rail for Processor	PM_SLP_S3#
NVVDD	0.6~1.2V(VBoot:0.9V)Core Voltage for nVIDIA N14E-GE DGPU	GPIO11_GPUVID
+3V3_NV	3.3V GPU I/O power rail (off in Optimus OFF)	DGPU_PWR_EN#
FBVDDQ	1.35V FB / GDDR5 power rail (off in Optimus OFF)	GPU_PWRGD
PEX_VDD	1.05V PLL power rail (off in Optimus OFF)	GPU_PWRGD

Net Naming Conventions

```
Suffix
 #  =  Active Low Signal
Prefix
 H  =  Host
 M  =  DDR Memory
 TP =  Test Point (does not connect anywhere else)
```

PCB Footprints

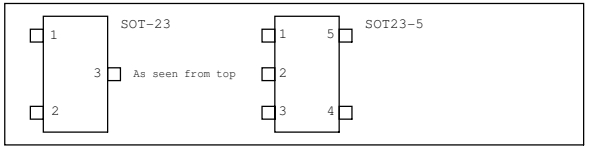

POWER STATES

STATE \ SIGNAL	SLP_S3#	SLP_S4#	SLP_S5#	+V*ALW	+*VSUS	+*VRUN	Clocks
S0(Full ON)	HIGH	HIGH	HIGH	ON	ON	ON	ON
S3(Suspend to RAM)	LOW	HIGH	HIGH	ON	ON	OFF	OFF
S4(Suspend to Disk)	LOW	LOW	HIGH	ON	OFF	OFF	OFF
S5 (Soft OFF)	LOW	LOW	LOW	ON	OFF	OFF	OFF

Note : WHEN AC MODE , System turn on then +V*SUS will always keep high

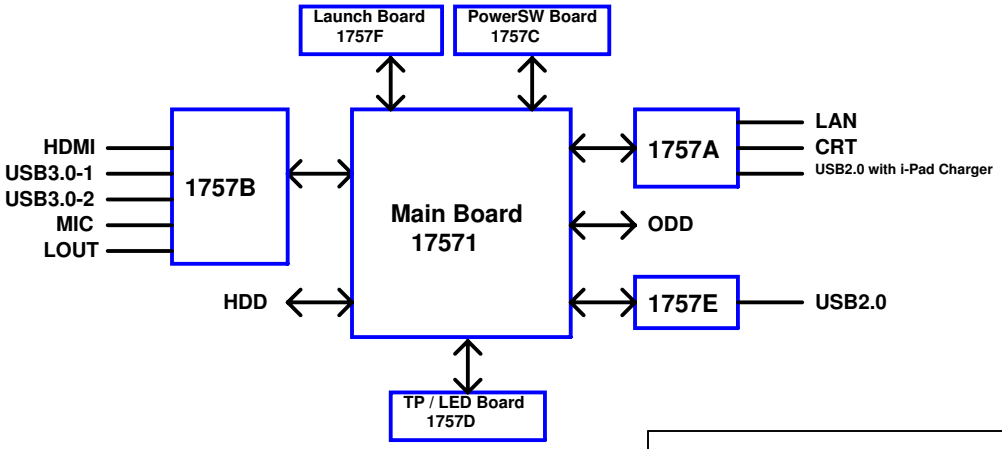

Title	Platform		
Size: Custom	Document Number: MS-175A1		Rev: 11
Date: Monday, January 06, 2014	Sheet 2 of 59		

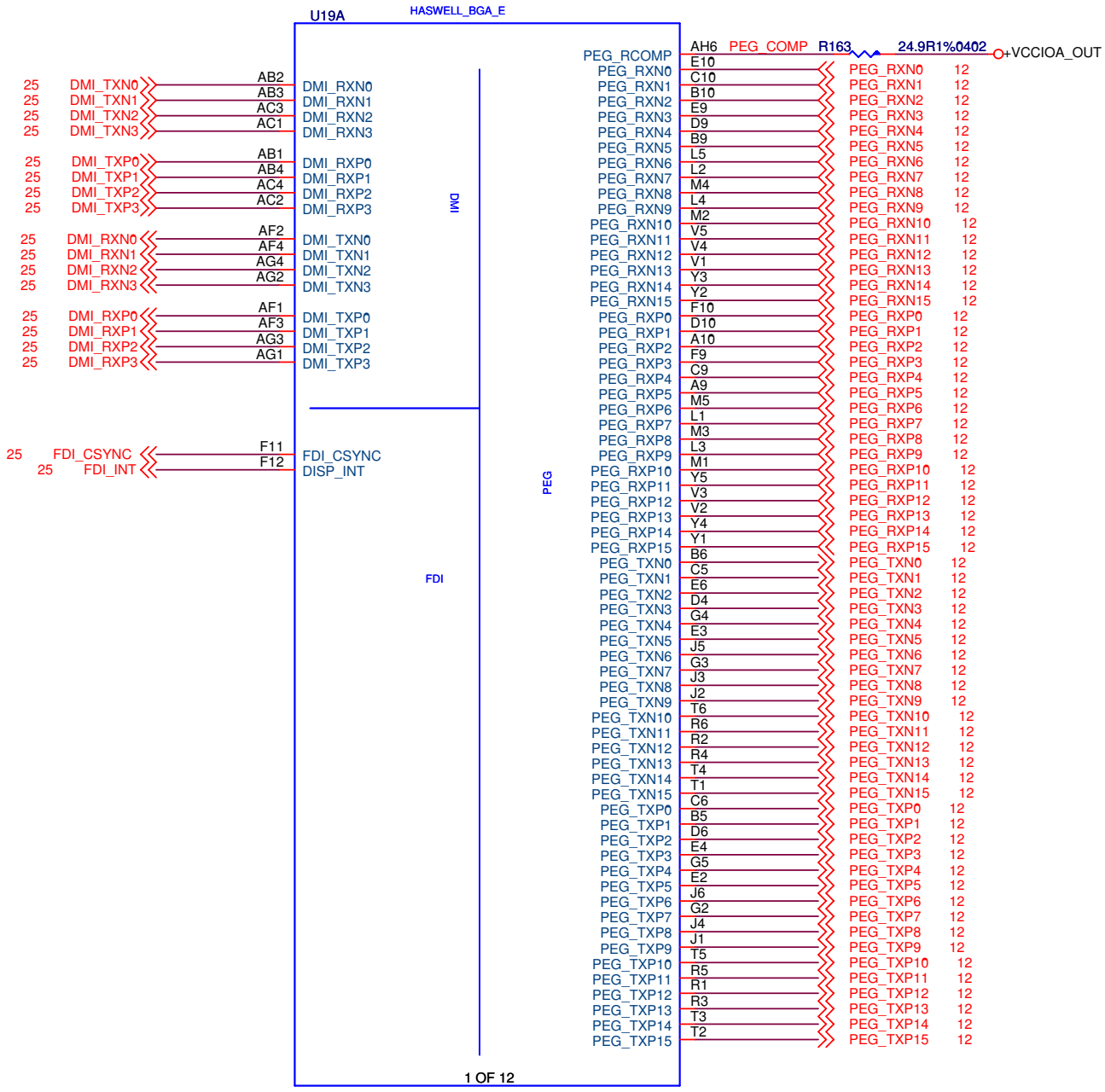

Title	CPU-1 (Host Bus)		
Size Custom	Document Number MS-175A1		Rev 11
Date: Friday, January 10, 2014		Sheet 3 of 59	

[Fuqun] 1.0V in CPU, EC set OD output

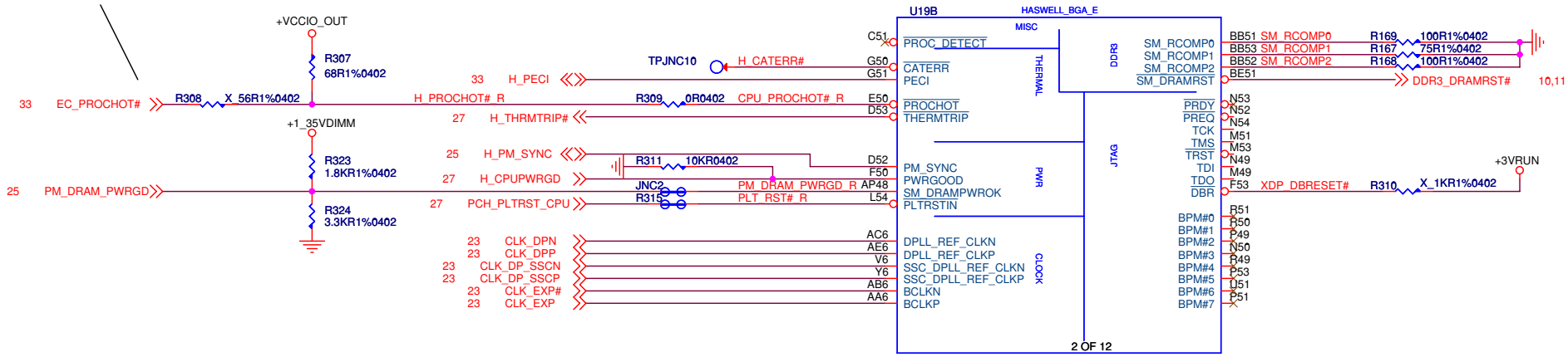

Title	CPU-2 (CLK/MISC)		
Size Custom	Document Number MS-175A1		Rev 11
Date: Friday, January 10, 2014	Sheet 4 of 59		

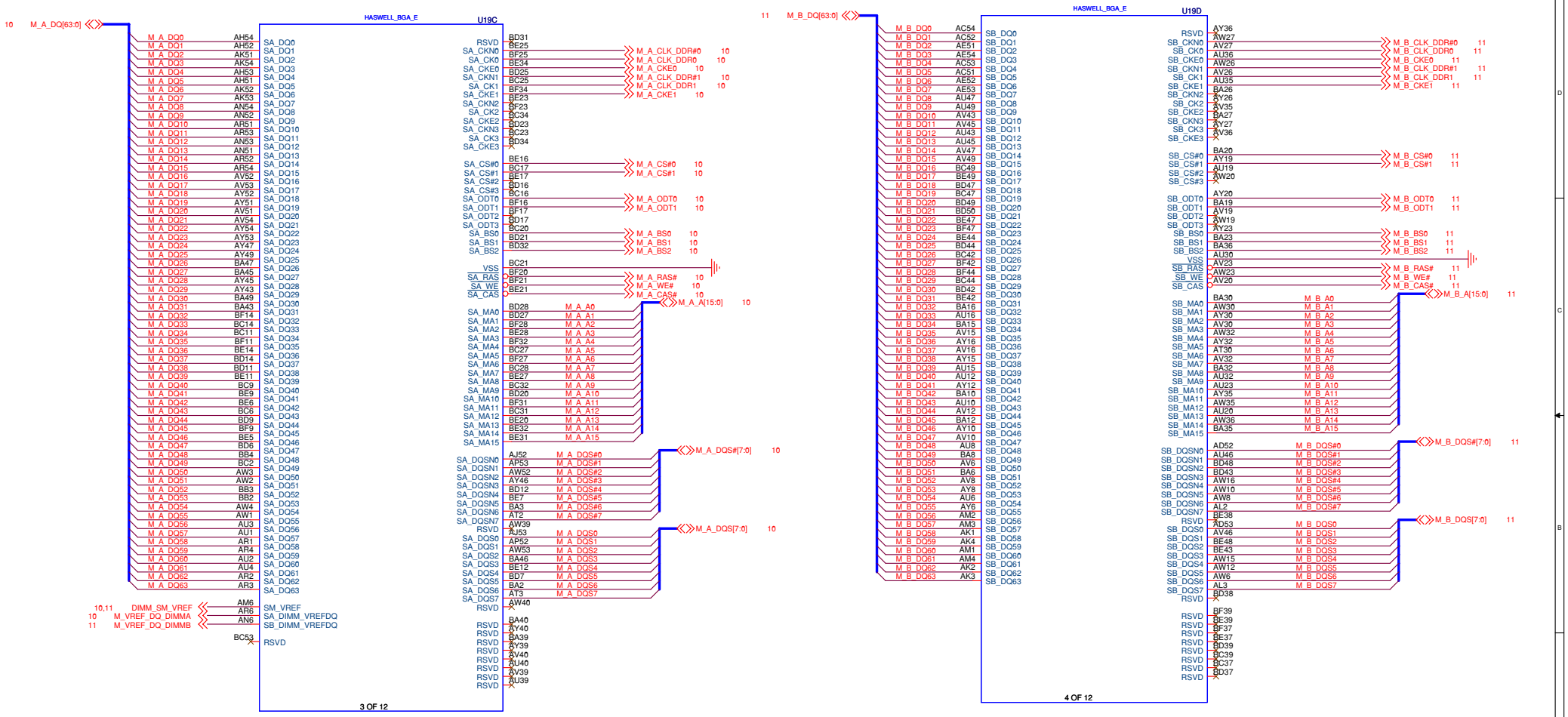

Title

CPU-3 (DDR3L)

Size	Document Number	Rev
Custom	MS-175A1	11

Date: Friday, January 10, 2014 Sheet 5 of 59

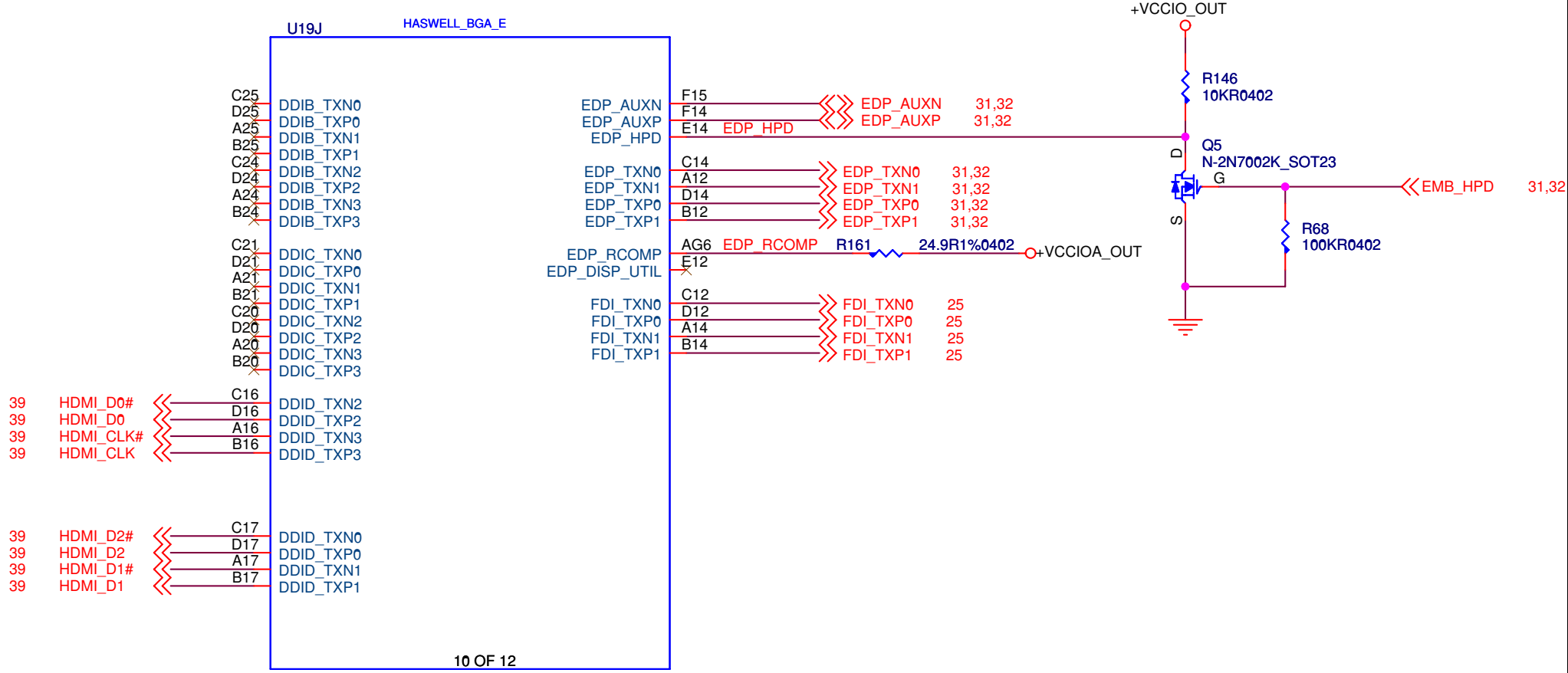

Title

CPU-4 (Display)

Size	Document Number	Rev
Custom	MS-175A1	11

Date: Friday, January 10, 2014 Sheet 6 of 59

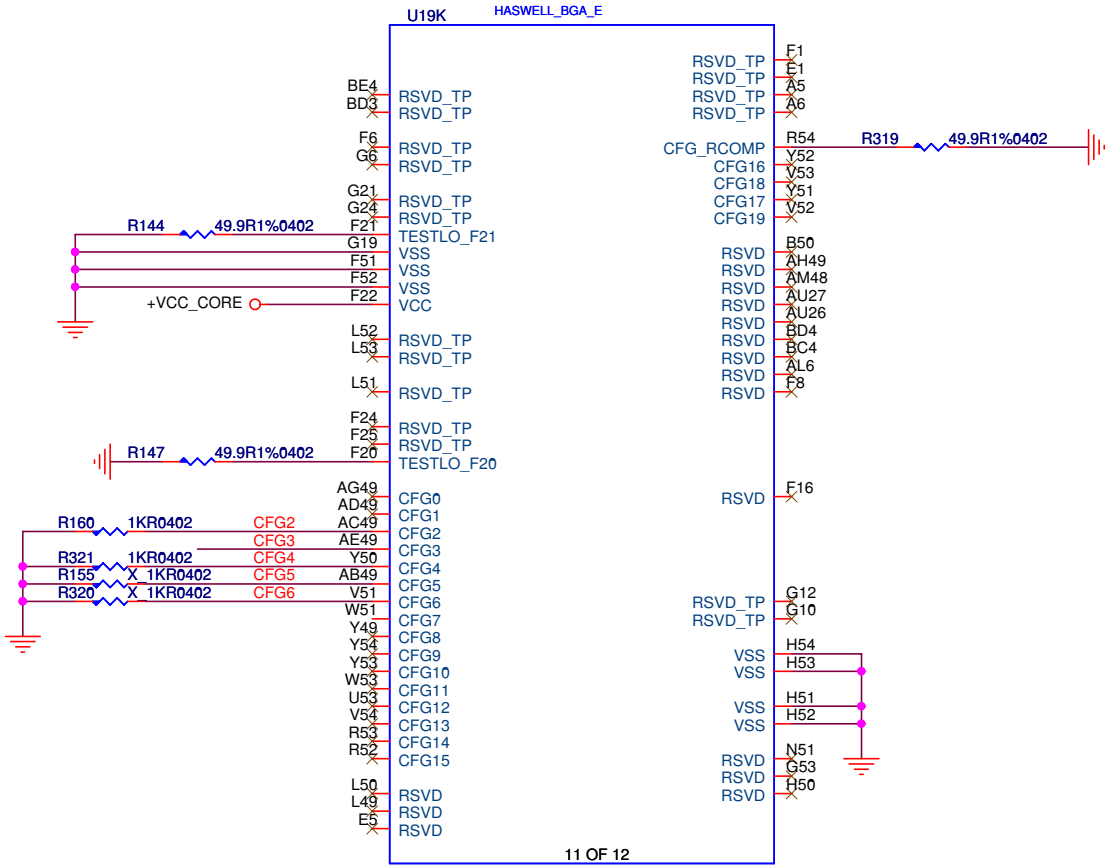

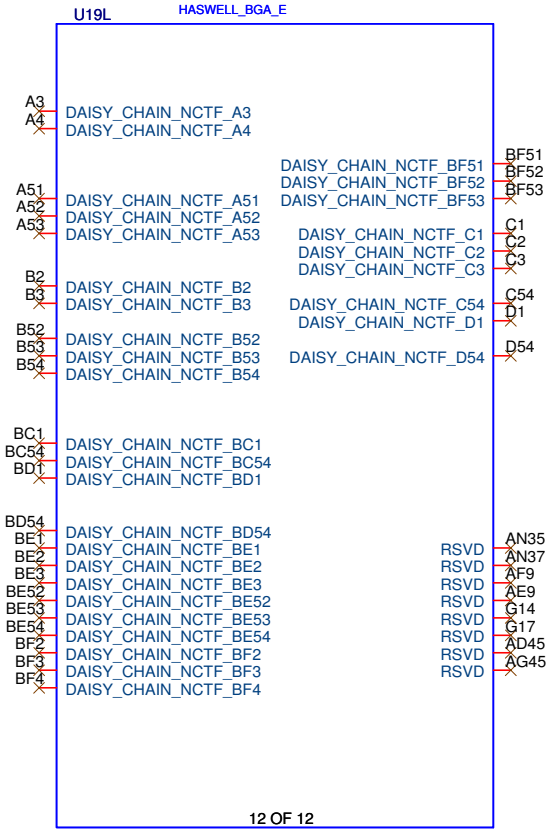

PCI Express* Static x16 Lane Numbering Reversal	
CFG2	1 = Normal operation 0 = Lane numbers reversed.

MSR Privacy Bit Feature	
CFG3	1 = Debug capability is determined by IA32_Debug_Interface_MSR (0xC80) bit[0] setting 0 = IA32_Debug_Interface_MSR (0xC80) bit[0] default setting overridden

eDP enable	
CFG4	1 = Disabled 0 = Enabled

PCI Express* Bifurcation	
CFG[5:6]	00 = 1 x8, 2 x4 PCI Express 01 = reserved 10 = 2 x8 PCI Express 11 = 1 x16 PCI Express

PEG DEFER TRAINING	
CFG7	1: (Default) PEG Train immediately following xxRESETB de assertion 0: PEG Wait for BIOS for training

Title	CPU-5 (CFG/Reserved)	
Size Custom	Document Number MS-175A1	Rev 11
Date: Friday, January 10, 2014	Sheet 7 of 59	

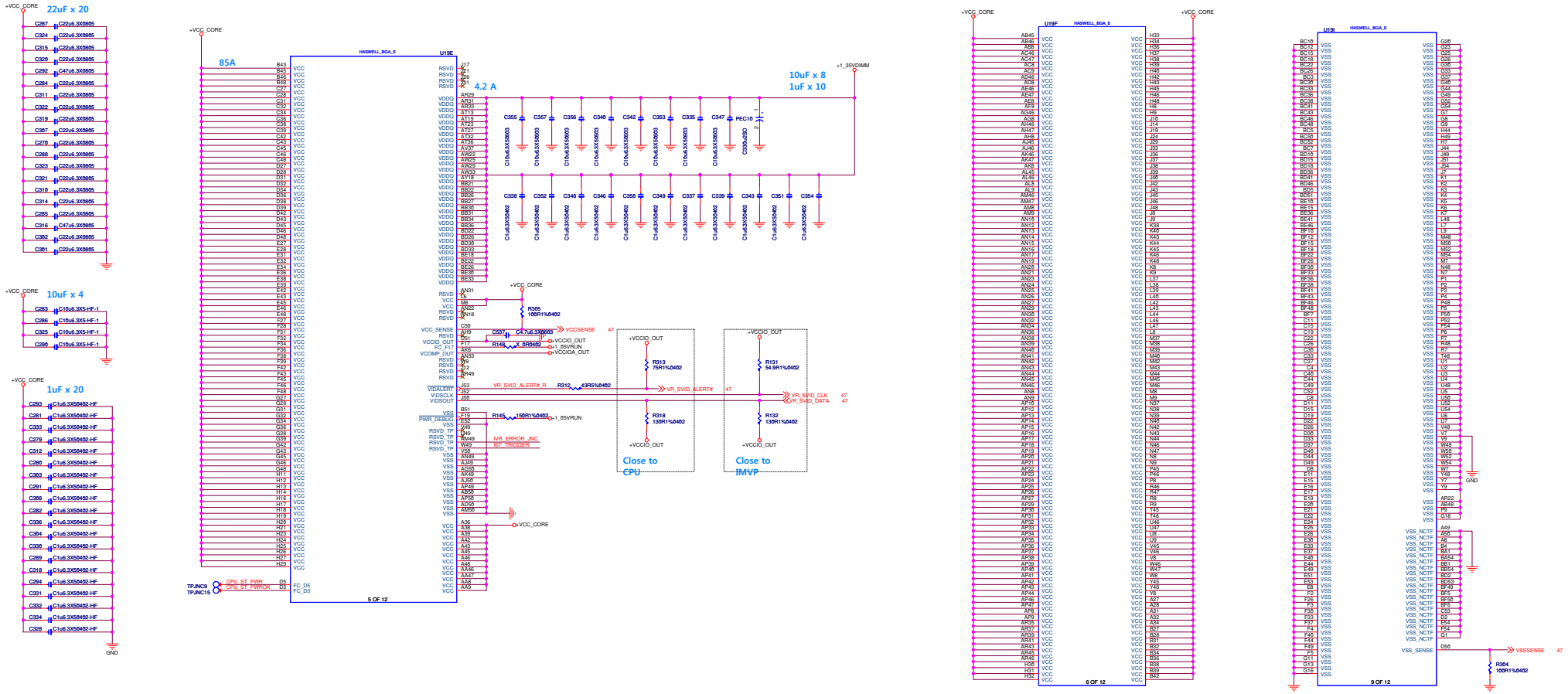

Title: CPU-6 (Power)

Size: Custom | Document Number: MS-175A1 | Rev: 11

Date: Friday, January 10, 2014 | Sheet 8 of 59

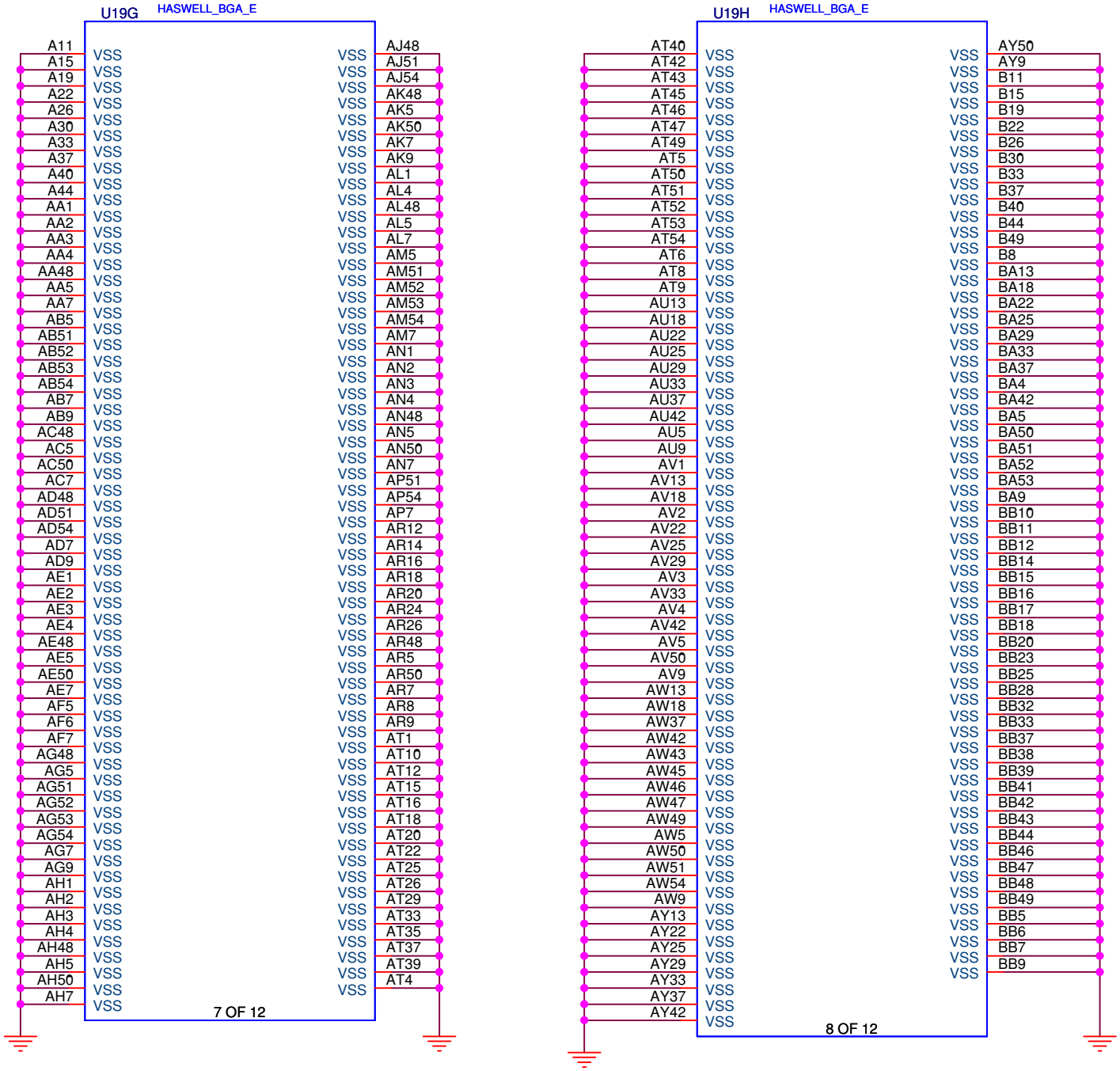

Title	CPU-7 (GND)		
Size Custom	Document Number MS-175A1		Rev 11
Date: Friday, January 10, 2014		Sheet 9 of 59	

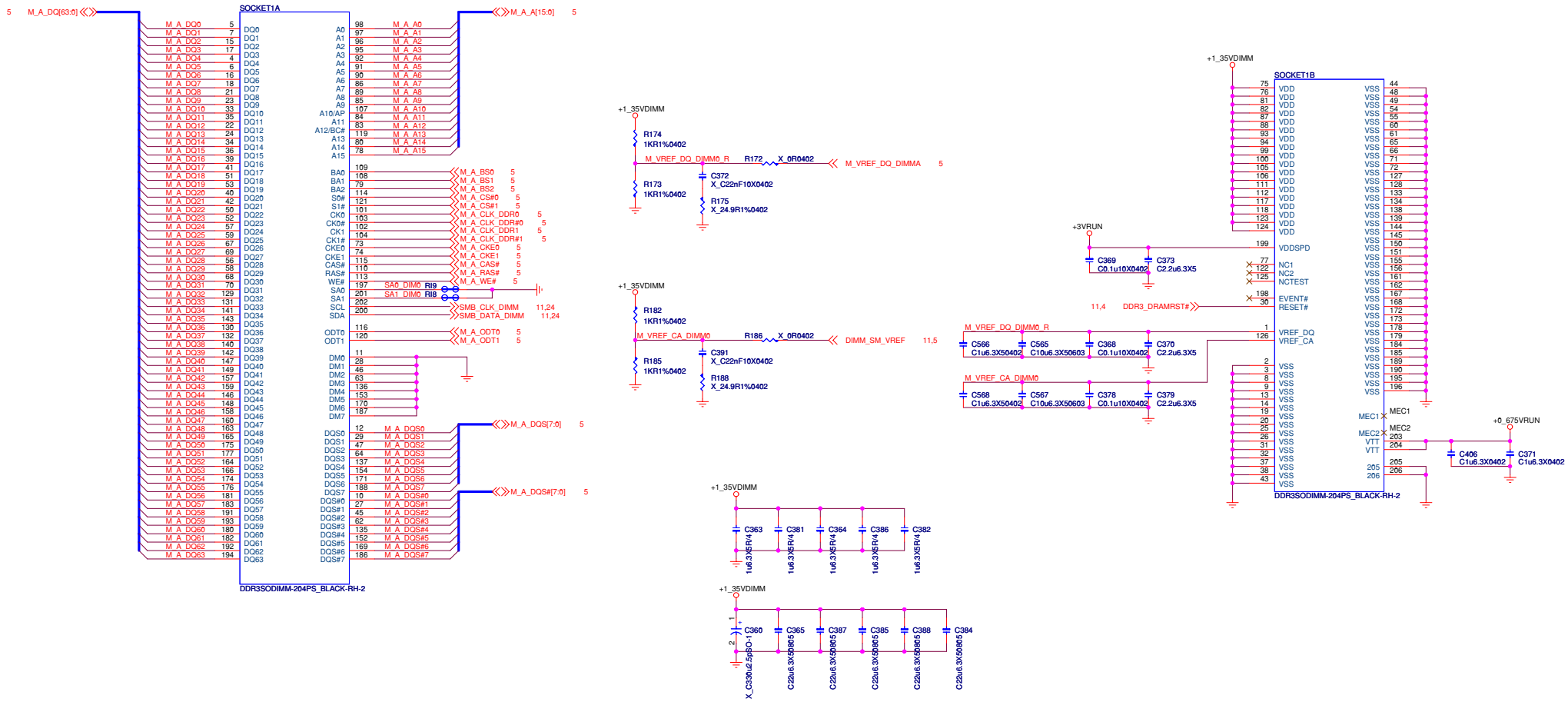

Title
DDR3L SODIMM 0

Size: Custom | Document Number: MS-175A1 | Rev: 11

Date: Monday, January 06, 2014 | Sheet 10 of 59

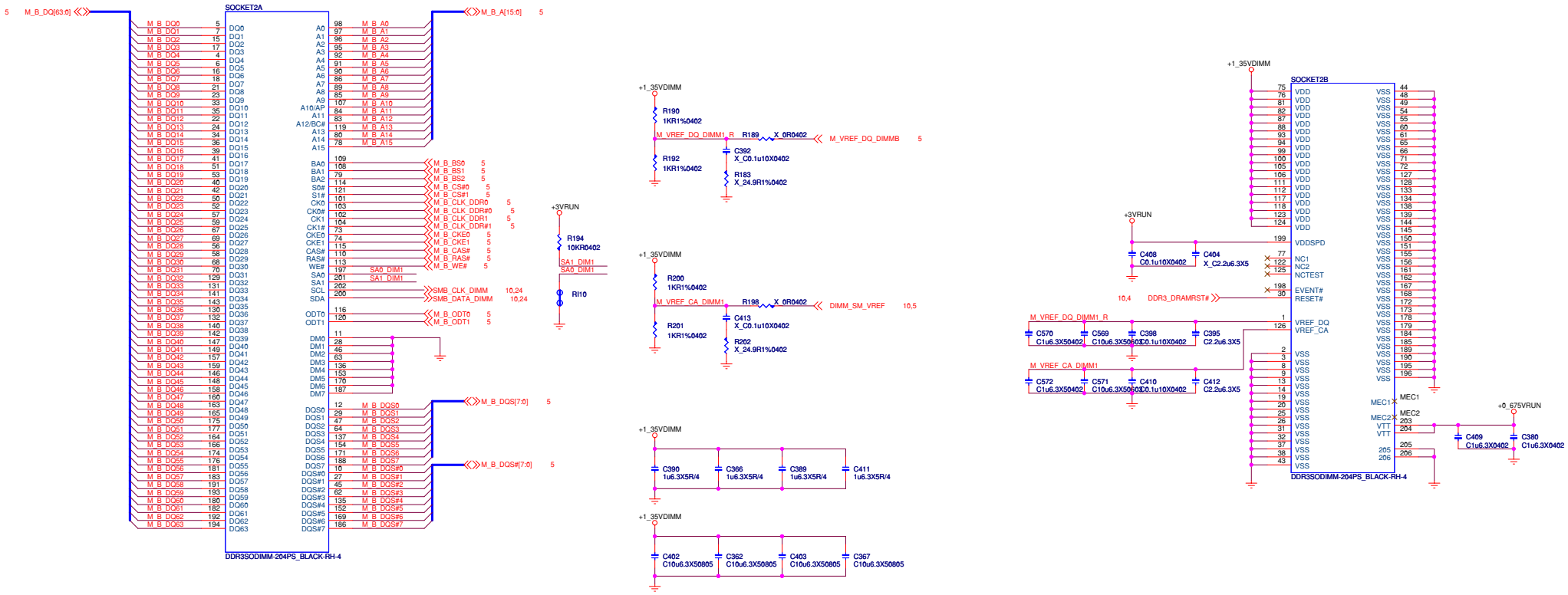

Title	DDR3L SODIMM 1		
Size Custom	Document Number MS-175A1		Rev 11
Date: Monday, January 06, 2014	Sheet 11 of 59		

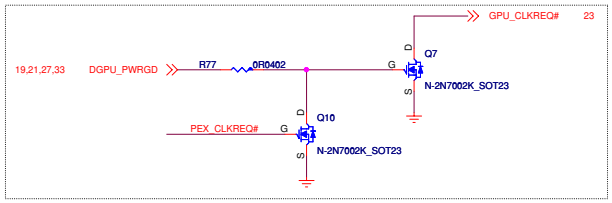

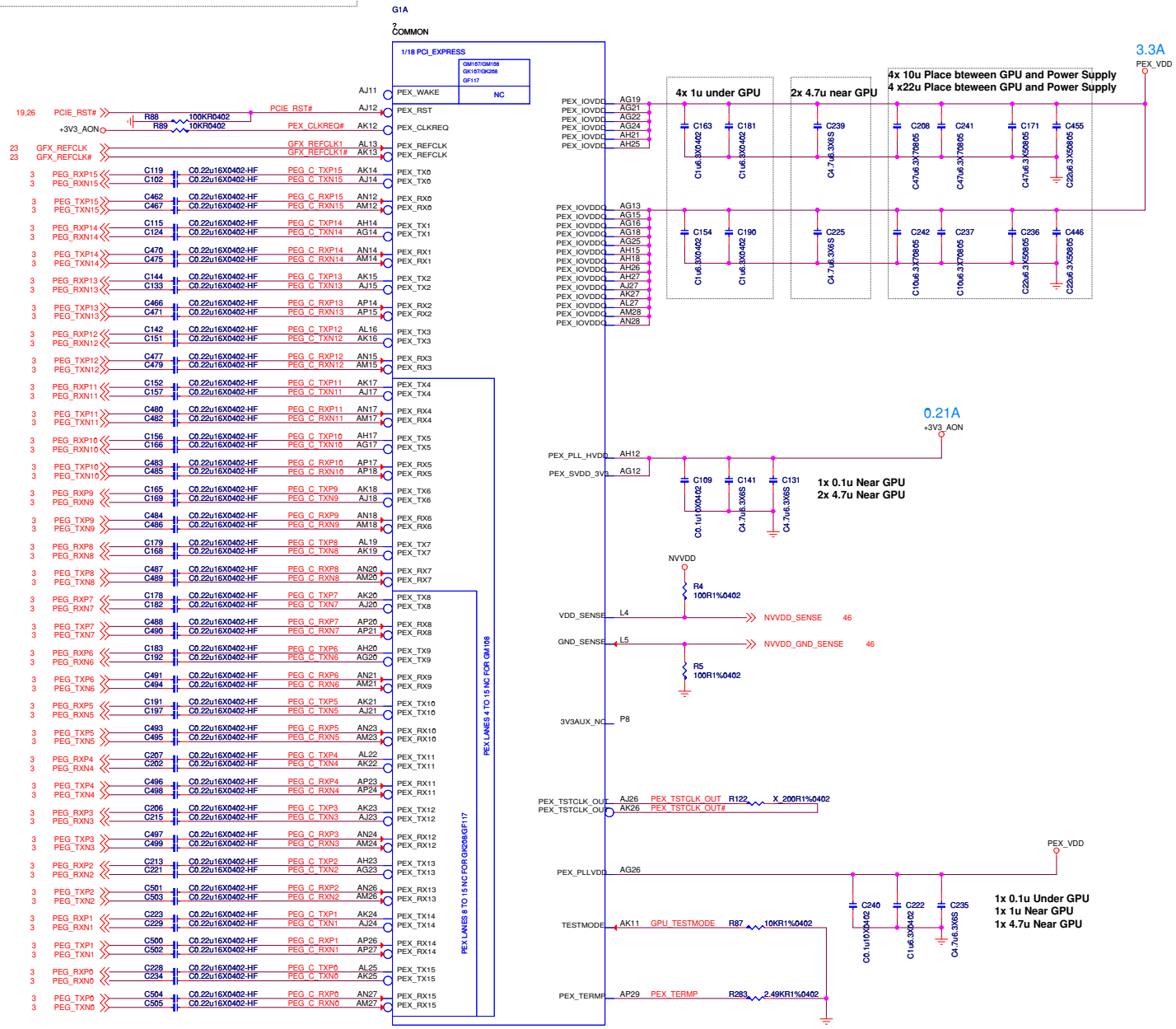

Title	N15P-GT PCI-E Host
Size	Custom
Document Number	MS-175A1
Rev	11
Date:	Monday, January 06, 2014
Sheet	12 of 59

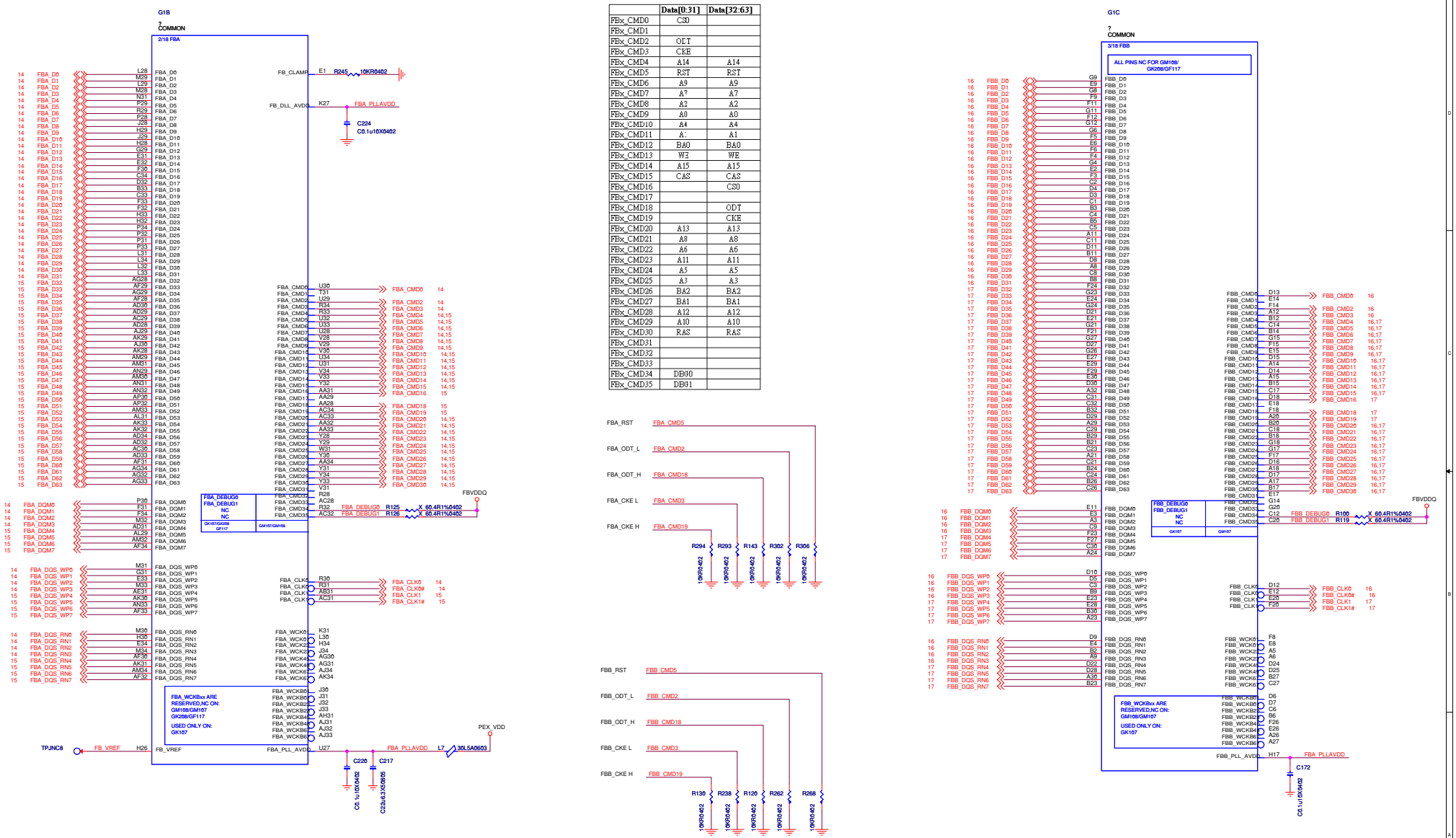

	Data[0:31]	Data[32:63]
FBx_CMD0	CS0	
FBx_CMD1		
FBx_CMD2	ODT	
FBx_CMD3	CKE	
FBx_CMD4	A14	A14
FBx_CMD5	RST	RST
FBx_CMD6	A9	A9
FBx_CMD7	A7	A7
FBx_CMD8	A2	A2
FBx_CMD9	A0	A0
FBx_CMD10	A4	A4
FBx_CMD11	A.	A1
FBx_CMD12	BA0	BA0
FBx_CMD13	WE	WE
FBx_CMD14	A15	A15
FBx_CMD15	CAS	CAS
FBx_CMD16	CS0	
FBx_CMD17		
FBx_CMD18		ODT
FBx_CMD19		CKE
FBx_CMD20	A13	A13
FBx_CMD21	A8	A8
FBx_CMD22	A6	A6
FBx_CMD23	A11	A11
FBx_CMD24	A5	A5
FBx_CMD25	A3	A3
FBx_CMD26	BA2	BA2
FBx_CMD27	BA1	BA1
FBx_CMD28	A12	A12
FBx_CMD29	A10	A10
FBx_CMD30	RAS	RAS
FBx_CMD31		
FBx_CMD32		
FBx_CMD33		
FBx_CMD34	DB00	
FBx_CMD35	DB01	

Title	N15P-GT_MEM IF A/B
Size / Document Number	MS-175A1
Rev	11
Date:	Friday, January 10, 2014
Sheet	13 of 59

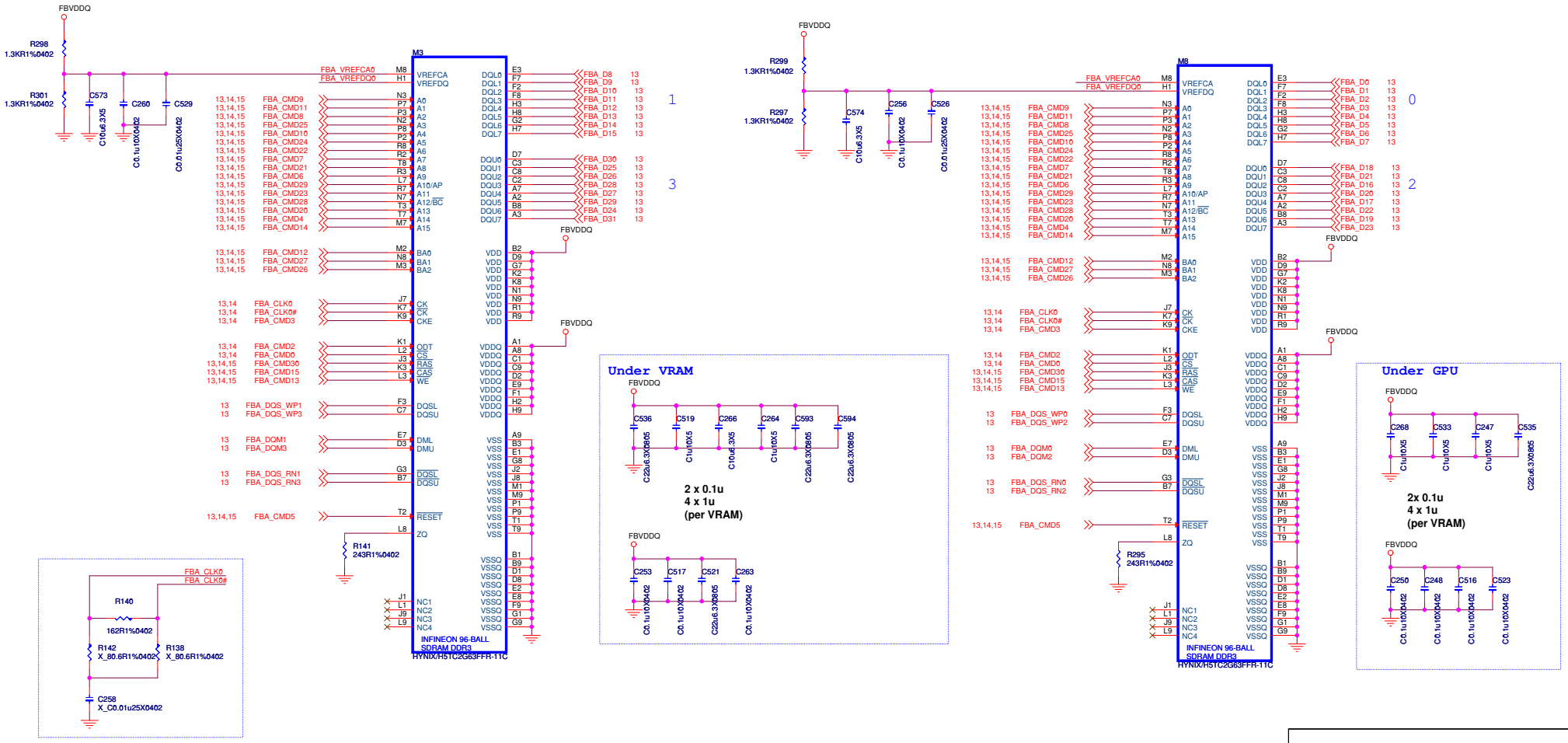

Title	N15P-GT_GDDR3 Frame A-1		
Size: Custom	Document Number: MS-175A1		Rev: 11
Date: Friday, January 10, 2014	Sheet 14 of 59		

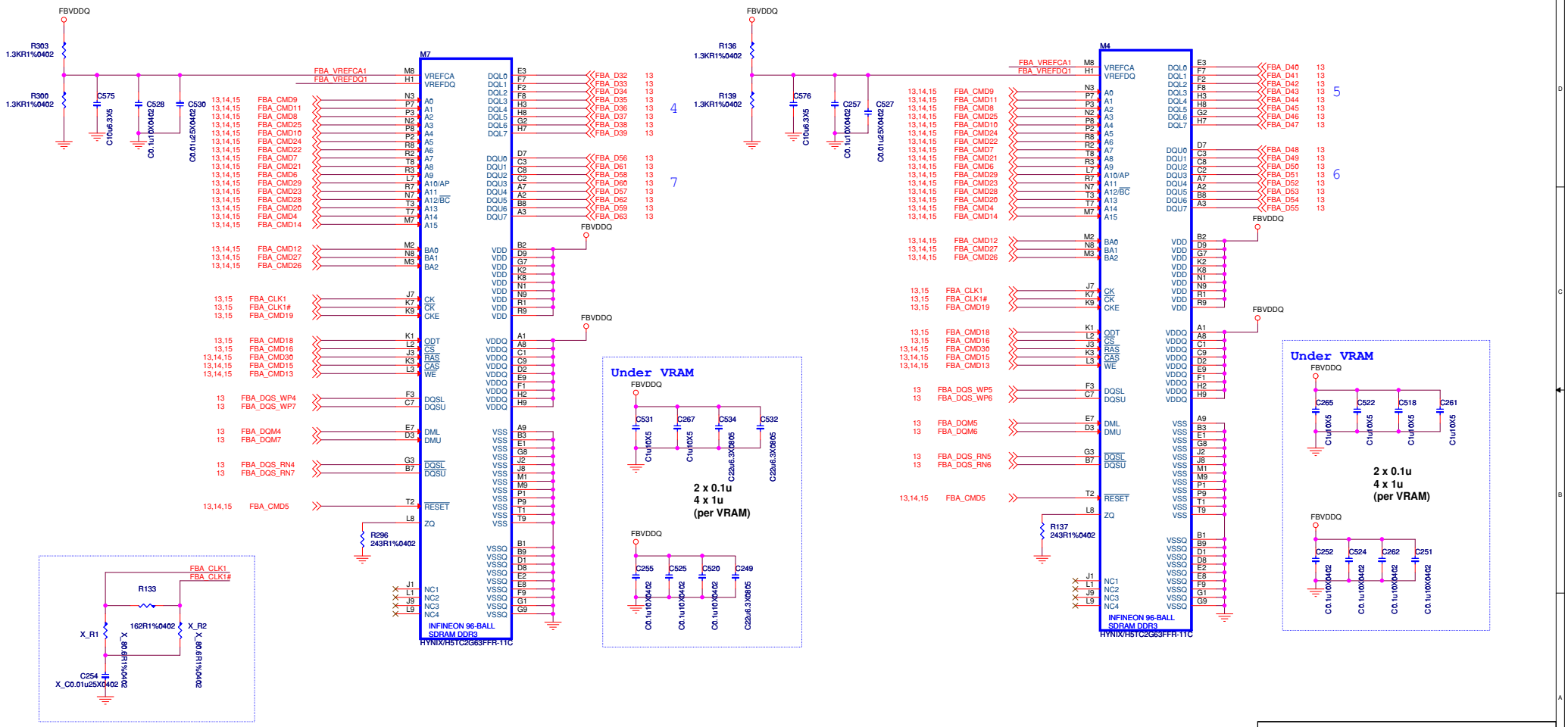

Title	N15P-GT_GDDR3 Frame A-2		
Size: Custom	Document Number: MS-175A1		Rev: 11
Date: Friday, January 10, 2014	Sheet 15 of 59		

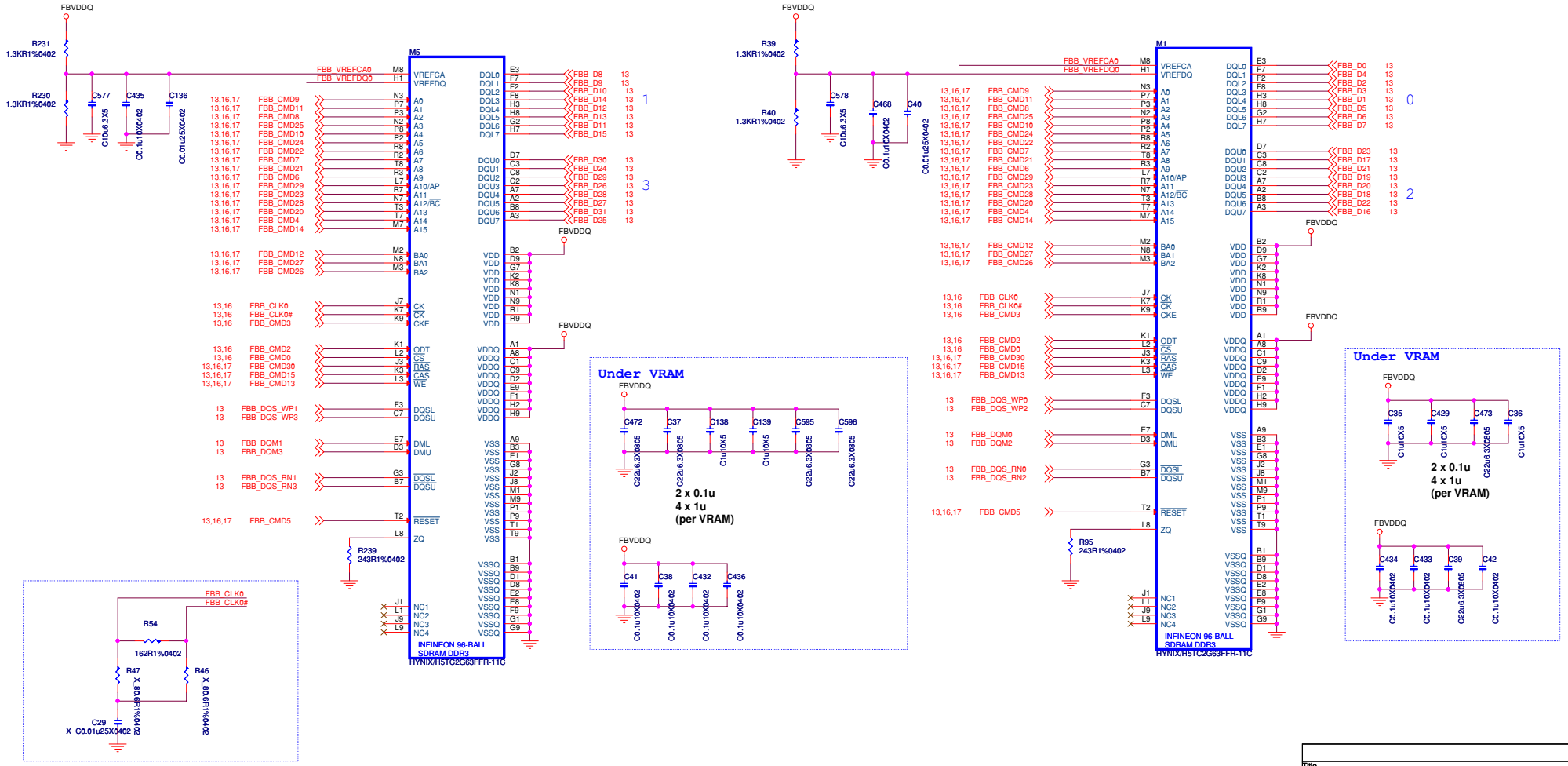

Title	N15P-GT_GDDR3 Frame B-1
Size: Custom	Document Number: MS-175A1
Rev	11
Date: Friday, January 10, 2014	Sheet 16 of 59

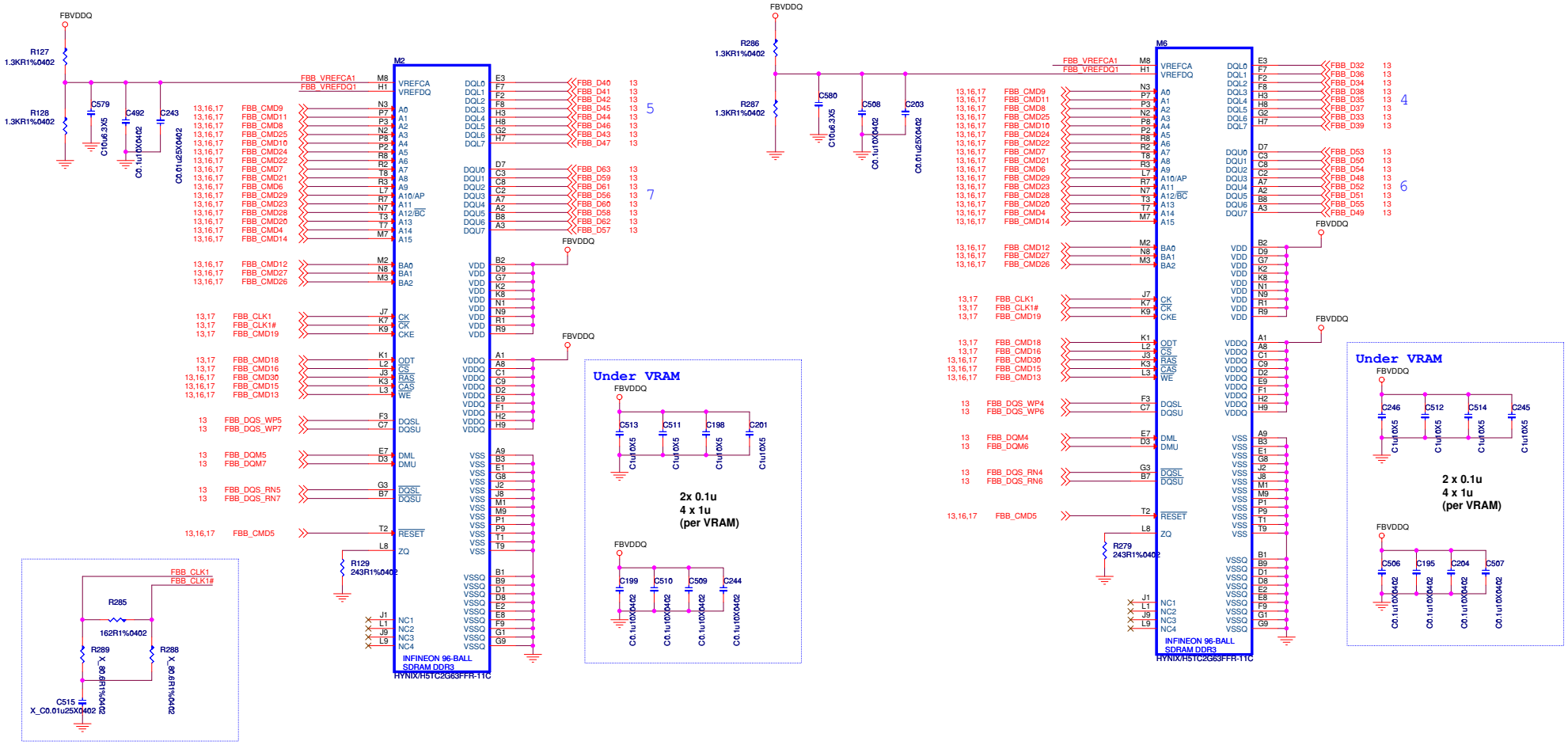

Title	N15P-GT_GDDR3 Frame B-2
Size: Custom	Document Number: MS-175A1
Rev	11
Date: Friday, January 10, 2014	Sheet 17 of 59

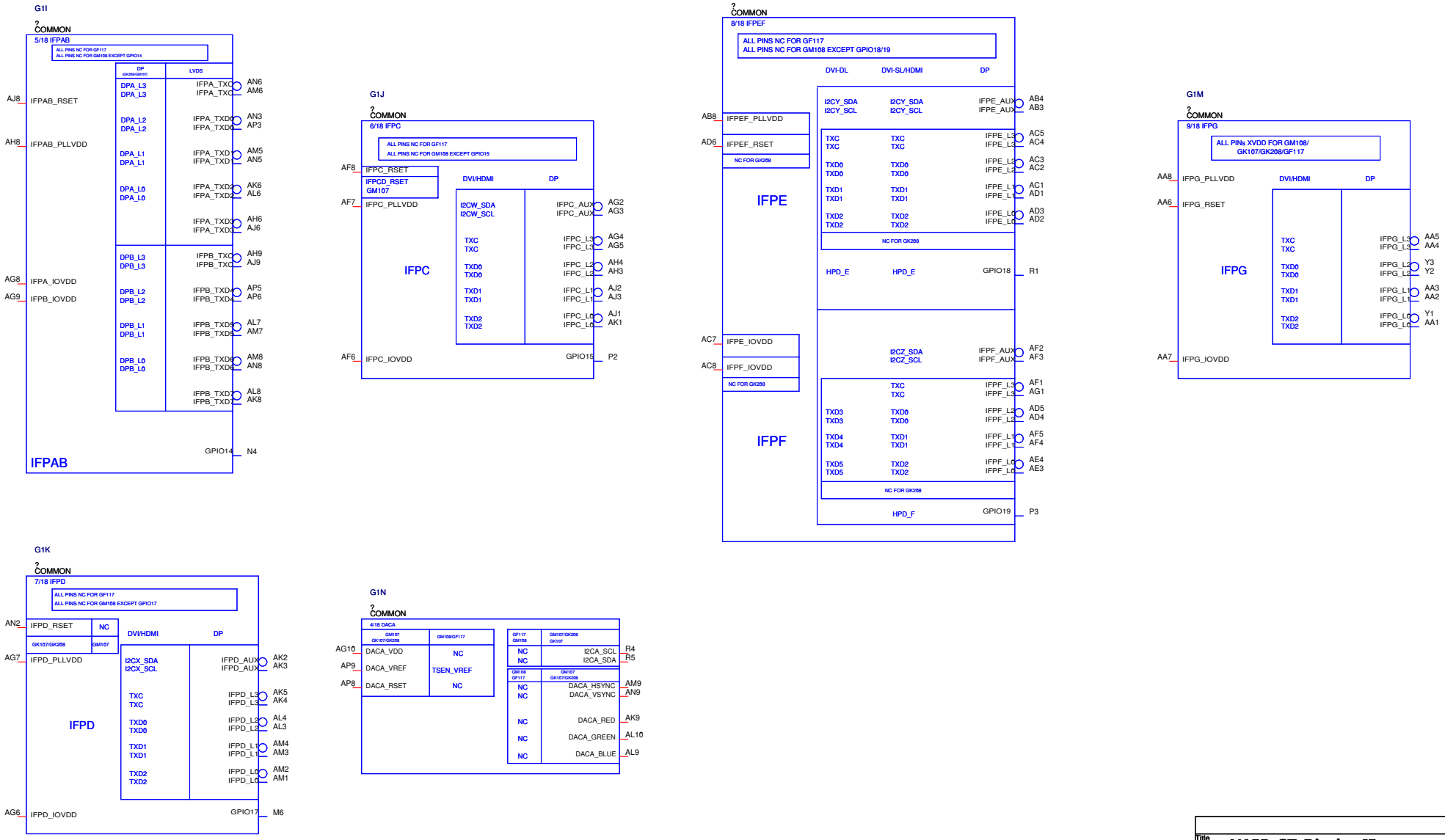

Title	N15P-GT_Display IF		
Size Custom	Document Number MS-175A1		Rev 11
Date: Monday, January 06, 2014	Sheet 18 of 59		

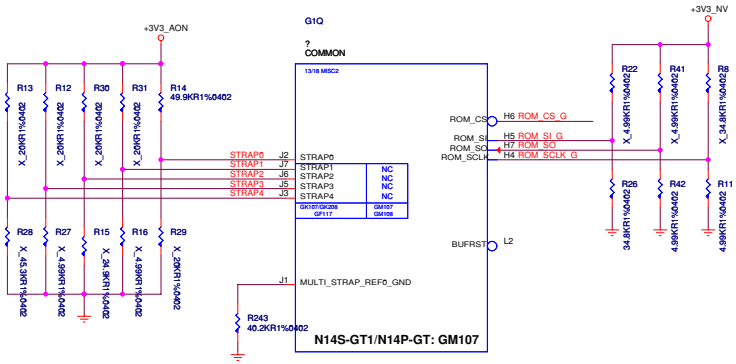

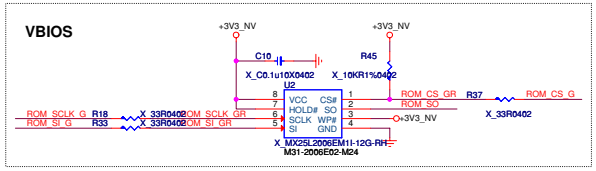

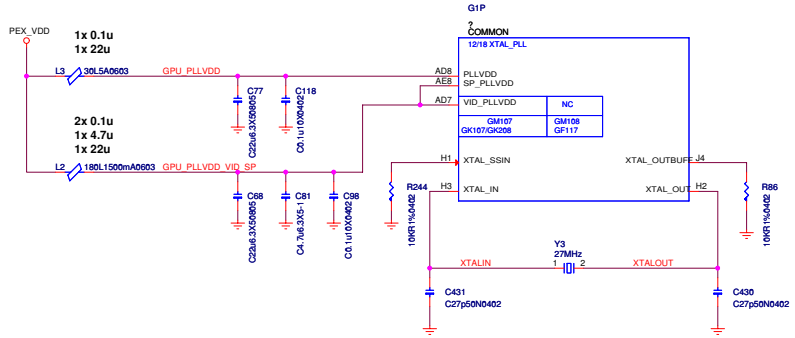

Item	N15P-GT	N15S-GT-B/S
Device ID	0x1391	0X1341
Package	GB4B-128	GB4B-128/GB2B-64
Internal P/N	GM107,28nm	GM108,28nm
ROM_SI	Refer to below RAM_Straps table	Refer to N15x_RAM_Straps table
ROM_SO	0x0000, 5Kohm pull down	0x0000, 5Kohm pull down
ROM_SCLK	0x0 for Optimus, 5kohm pull down	0x0 for Optimus, 5kohm pull down
Strap0	Reserved (Keep pull-up 3V3_AON and pull-down footprints and stuff 50kΩ pull-up)	Reserved (Keep pull-up 3V3_AON and pull-down footprints and stuff 50kΩ pull-up)
Strap1	Reserved (Keep pull-up and pull-down footprints and leave them no stuffed by default)	Reserved (Keep pull-up and pull-down footprints and leave them no stuffed by default)
Strap2		
Strap3		
Strap4		
Open_VRG SKU	B	B
NVVDD Boot Voltage	0.9V	0.9V

N15P-GT	Config	VRAM P/N	RAM_CFG	ROM_SI
Hynix	128Mx16	H5TC2G63FFR-11C	0x6	PD 35K
Samsung	128Mx16	K4W2G1646Q-BC1A	0x8	PU 5K

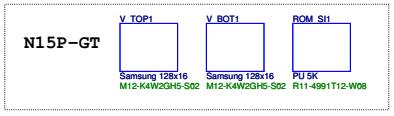

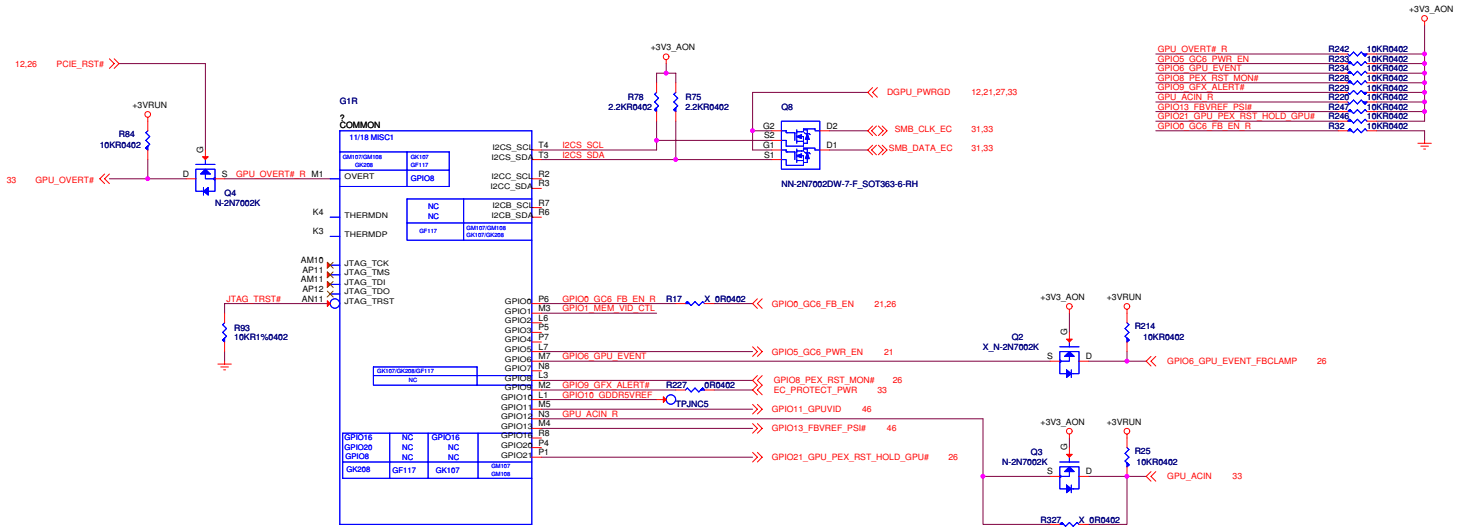

N15S-GT1	Config	VRAM P/N	RAM_CFG	ROM_SI
Hynix	256Mx16	H5TC4G63AFR-11C	0x0	PD 5K
Samsung	256Mx16	K4W4G1646D-BC1A	0x2	PD 15K

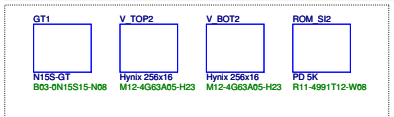

Title: N15P-GT_Thermal & GPIO

Size: Custom | Document Number: MS-175A1 | Rev: 11

Date: Monday, January 06, 2014 | Sheet 19 of 59

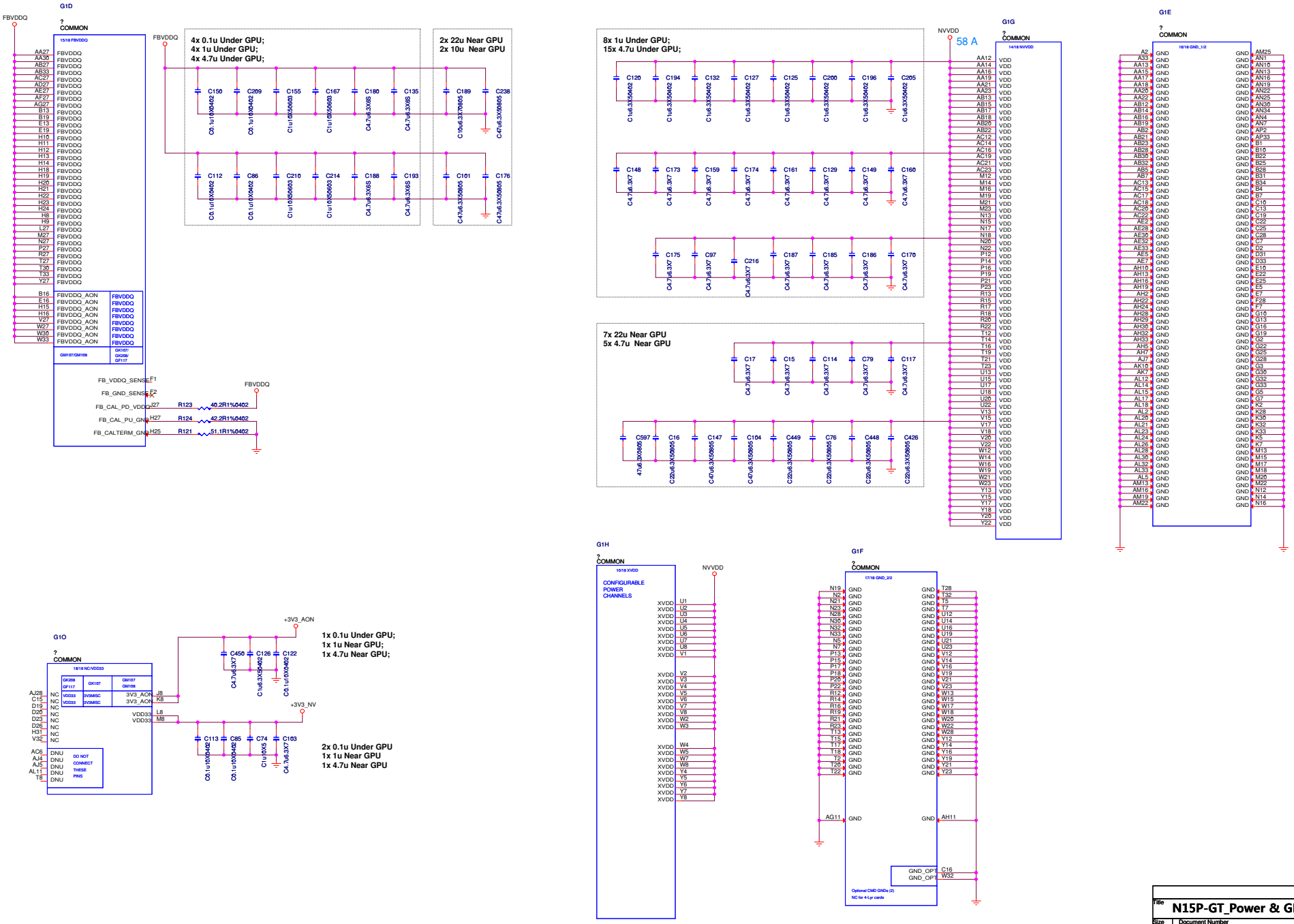

Title	N15P-GT_Power & GND
Size / Custom	Document Number: MS-175A1
Rev	11
Date:	Friday, January 10, 2014
Sheet	20 of 59

3.3V

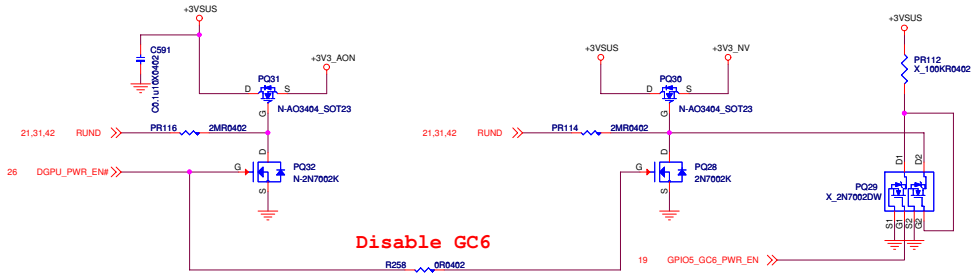

1.05V

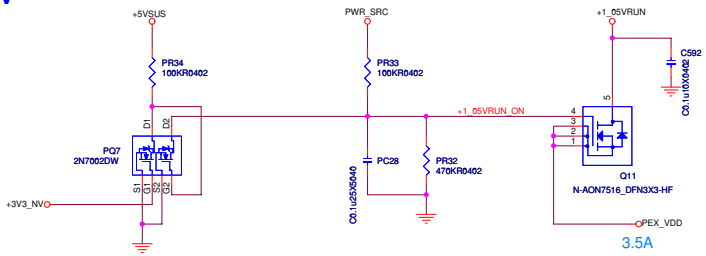

1.5V

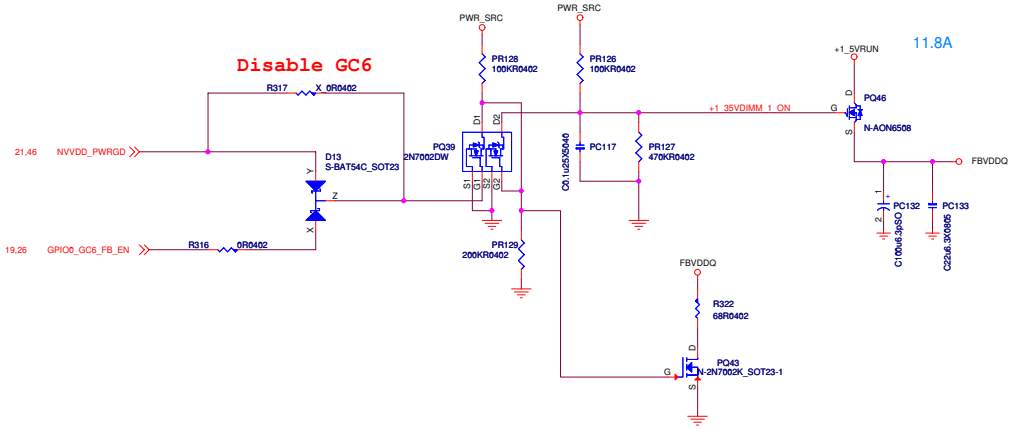

GPU_PWRGD

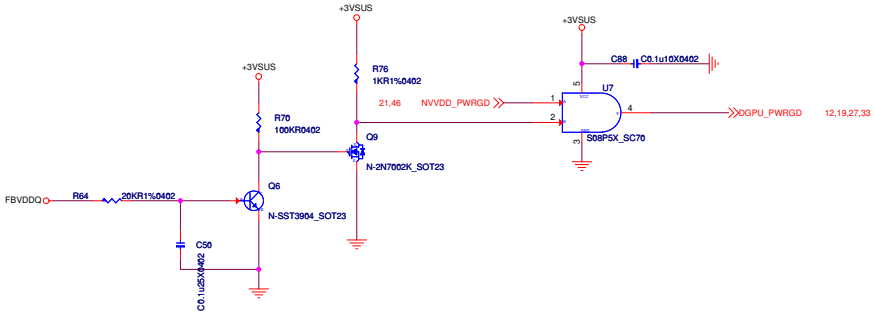

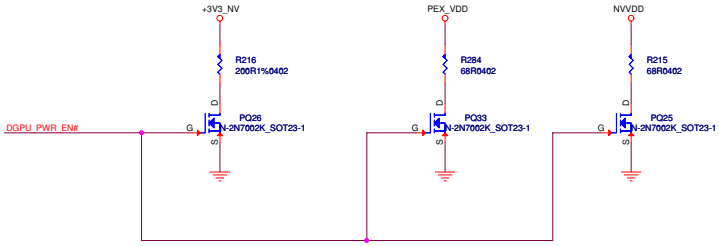

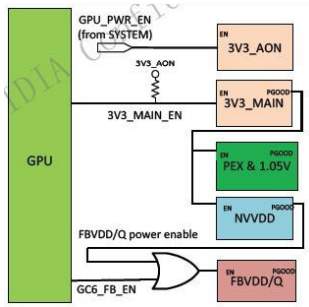

Title	N15P-GT Power Control		
Size Custom	Document Number MS-175A1		Rev 11
Date: Friday, January 10, 2014	Sheet 21 of 59		

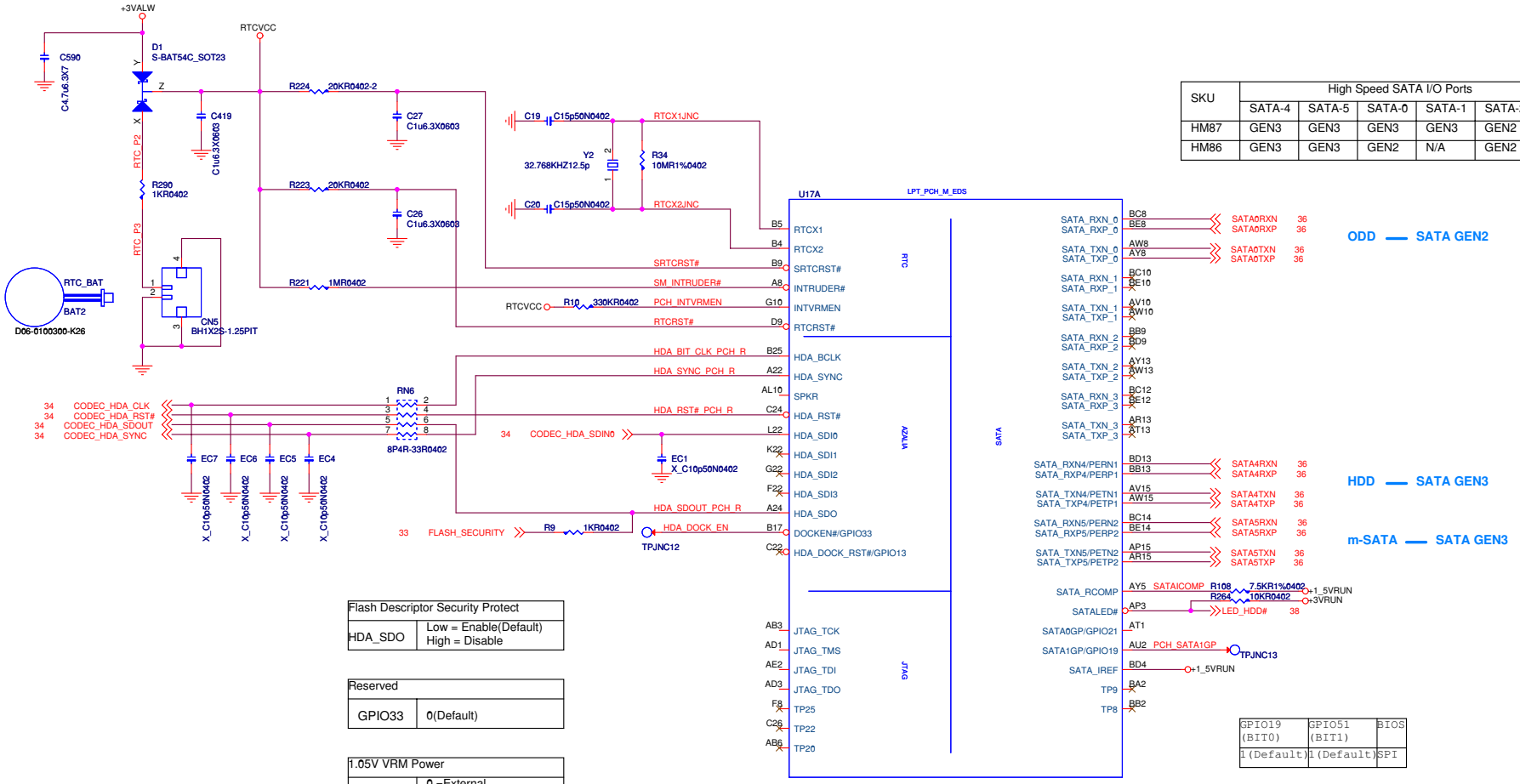

SKU	High Speed SATA I/O Ports					
	SATA-4	SATA-5	SATA-0	SATA-1	SATA-2	SATA-3
HM87	GEN3	GEN3	GEN3	GEN3	GEN2	GEN2
HM86	GEN3	GEN3	GEN2	N/A	GEN2	N/A

Flash Descriptor Security Protect	
HDA_SDO	Low = Enable(Default) High = Disable

Reserved	
GPIO33	0(Default)

1.05V VRM Power	
INTVRMEN	0 =External 1 = Internal

No Reboot	
SPKR	1 = Disable(Default) 0 = Enable

GPIO19 (BIT0)	GPIO51 (BIT1)	BIOS
1(Default)	1(Default)	SPI

Title: PCH-1 (HDA/JTAG/SATA)

Size: Custom | Document Number: MS-175A1 | Rev: 10

Date: Monday, January 06, 2014 | Sheet 22 of 59

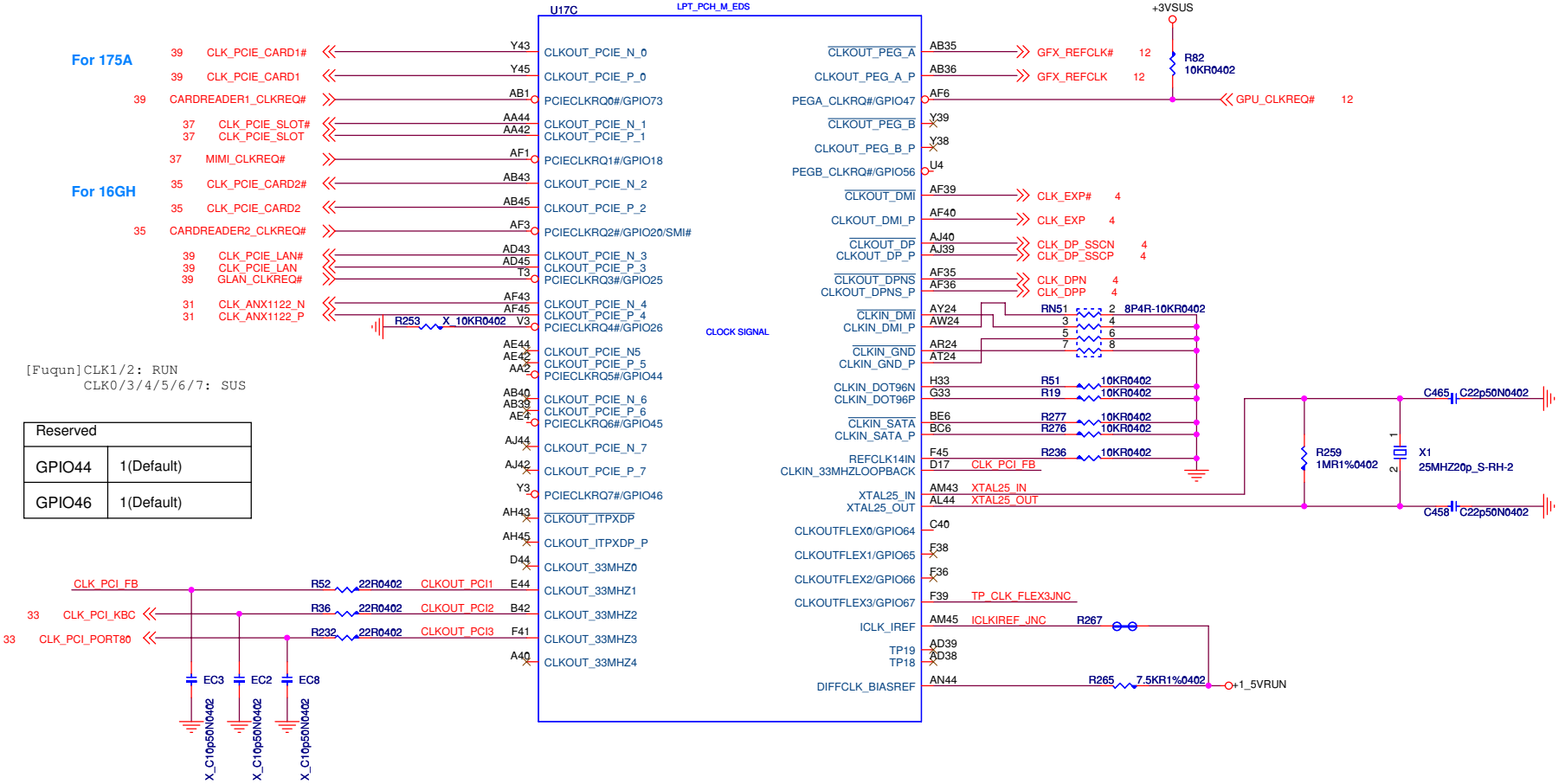

[Fuqun]CLK1/2: RUN
CLK0/3/4/5/6/7: SUS

Reserved	
GPIO44	1(Default)
GPIO46	1(Default)

Title	PCH-2 (CLK)
Size: Custom	Document Number: MS-175A1
Rev	11
Date: Monday, January 06, 2014	Sheet 23 of 59

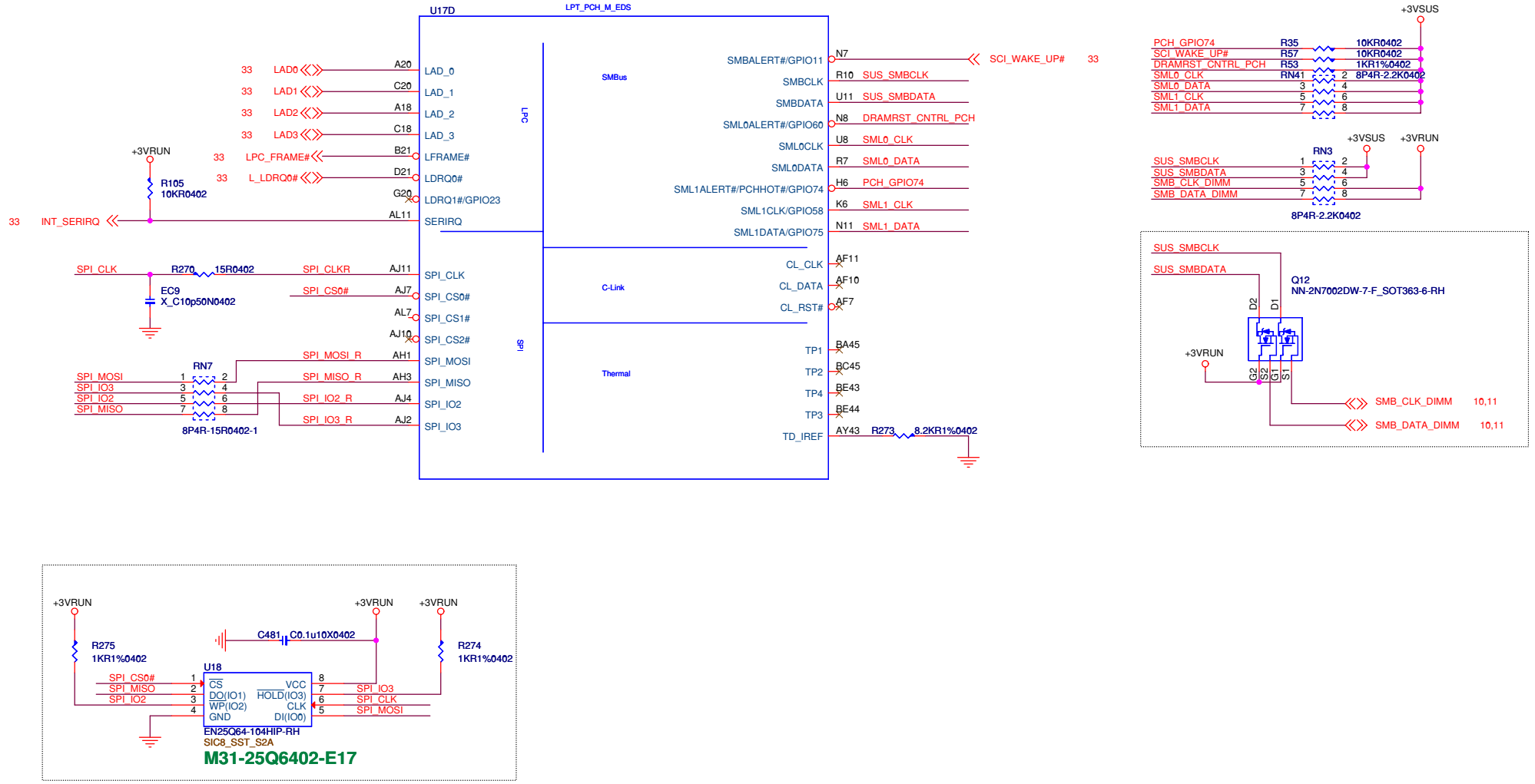

Title: PCH-3 (LPC,SMBUS)

Size: Custom | Document Number: MS-175A1 | Rev: 11

Date: Monday, January 06, 2014 | Sheet 24 of 59

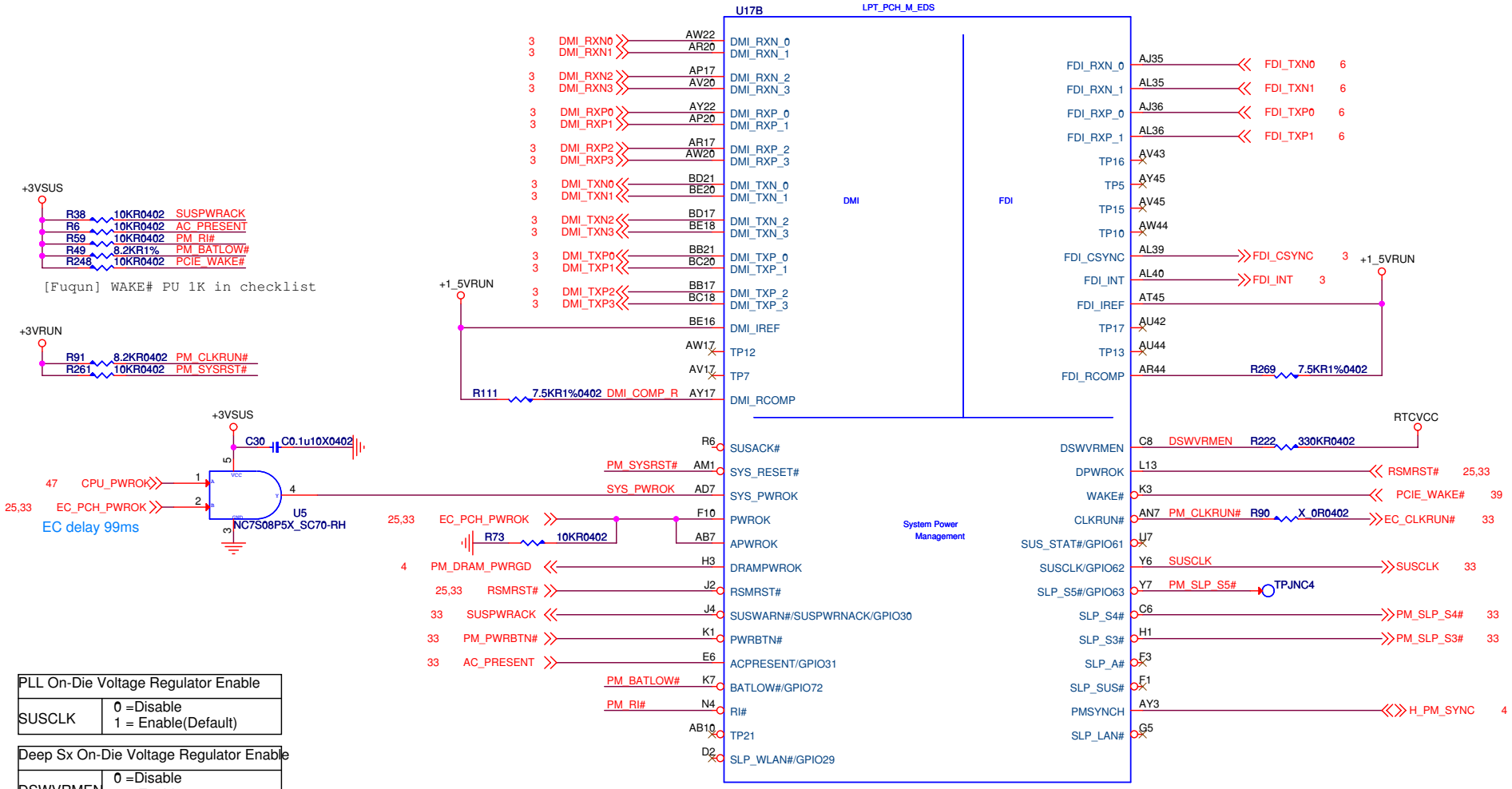

PLL On-Die Voltage Regulator Enable	
SUSCLK	0 =Disable 1 = Enable(Default)

Deep Sx On-Die Voltage Regulator Enable	
DSWVRMEN	0 =Disable 1 = Enable

Title	PCH-4 (DMI,FDI)	
Size Custom	Document Number MS-175A1	Rev 11
Date: Monday, January 06, 2014	Sheet 25 of 59	

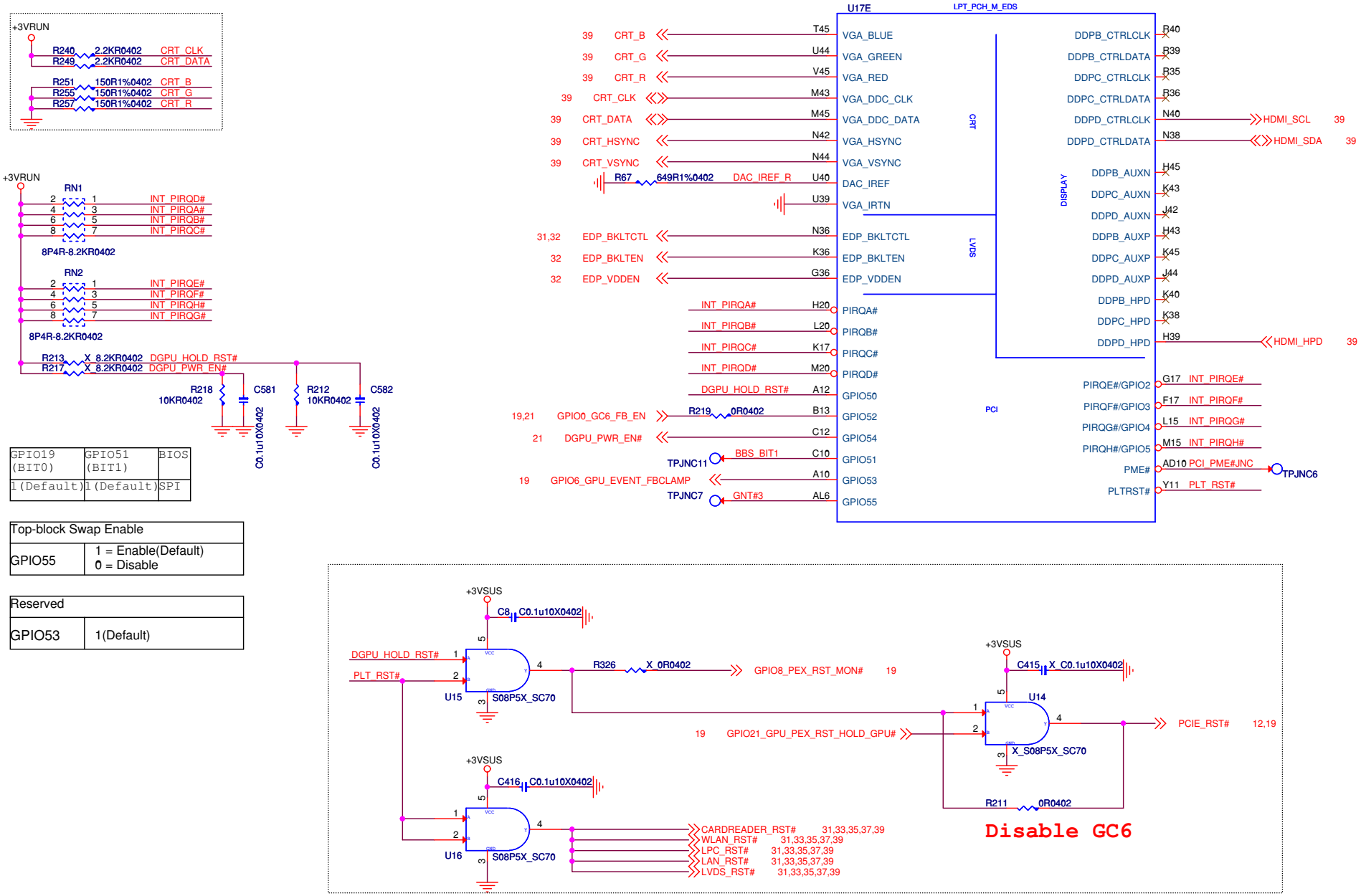

GPIO19 (BIT0)	GPIO51 (BIT1)	BIOS
1(Default)	1(Default)	SPI

Top-block Swap Enable	
GPIO55	1 = Enable(Default) 0 = Disable

Reserved	
GPIO53	1(Default)

Title	PCH-5 (PCI,DDI)	
Size: Custom	Document Number: MS-175A1	Rev: 11
Date: Monday, January 06, 2014	Sheet 26 of 59	

GPIO Setting : Ref 486708_LPT_EDS Section2.24

PLL ON DIE VR_ENABLE	
GPIO28	1=Enable(Default) 0=Disable

Reserved	
GPIO36	0(Default)

TLS	
GPIO37	0=Disable(Default) 1: Enable

Reserved	
GPIO8	1: (Default) 0: CRB

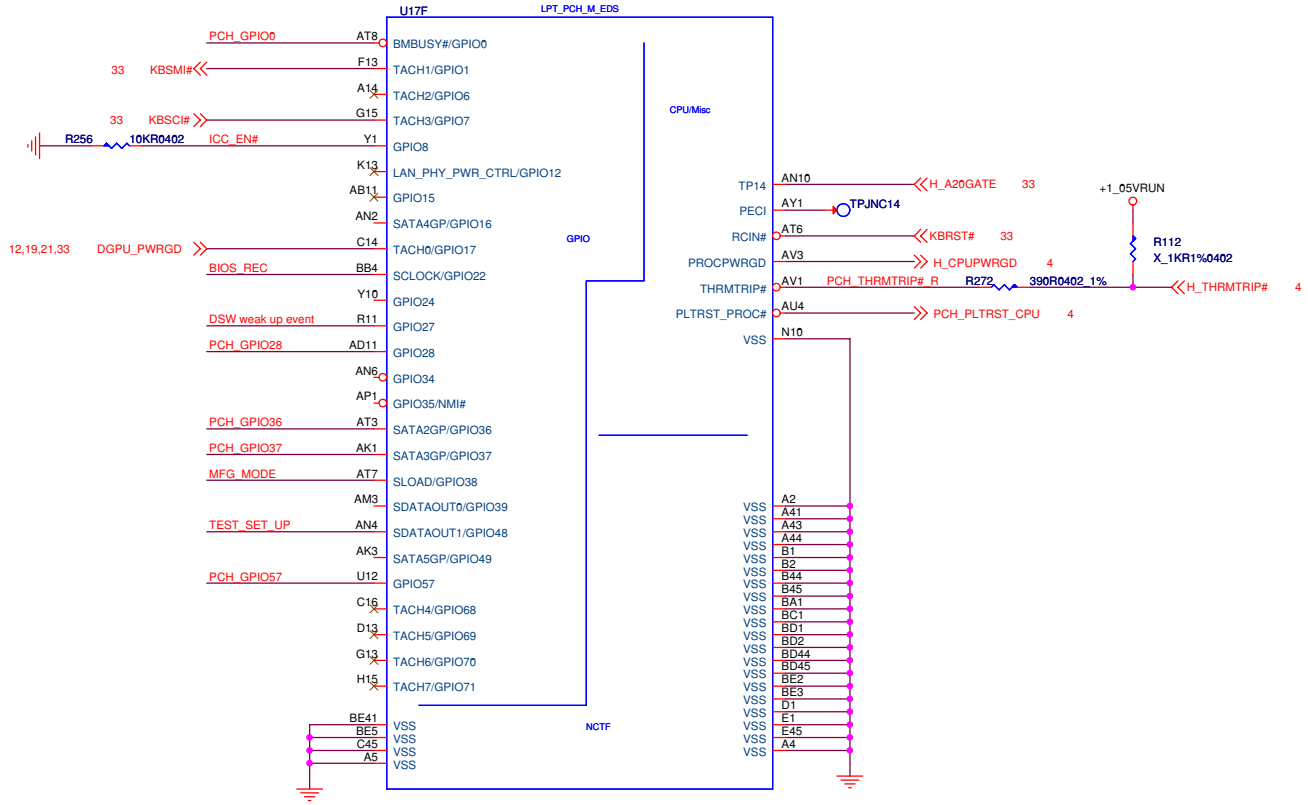

Title	PCH-6 (GPIO,MISC)	
Size: Custom	Document Number: MS-175A1	Rev: 11
Date: Monday, January 06, 2014	Sheet 27 of 59	

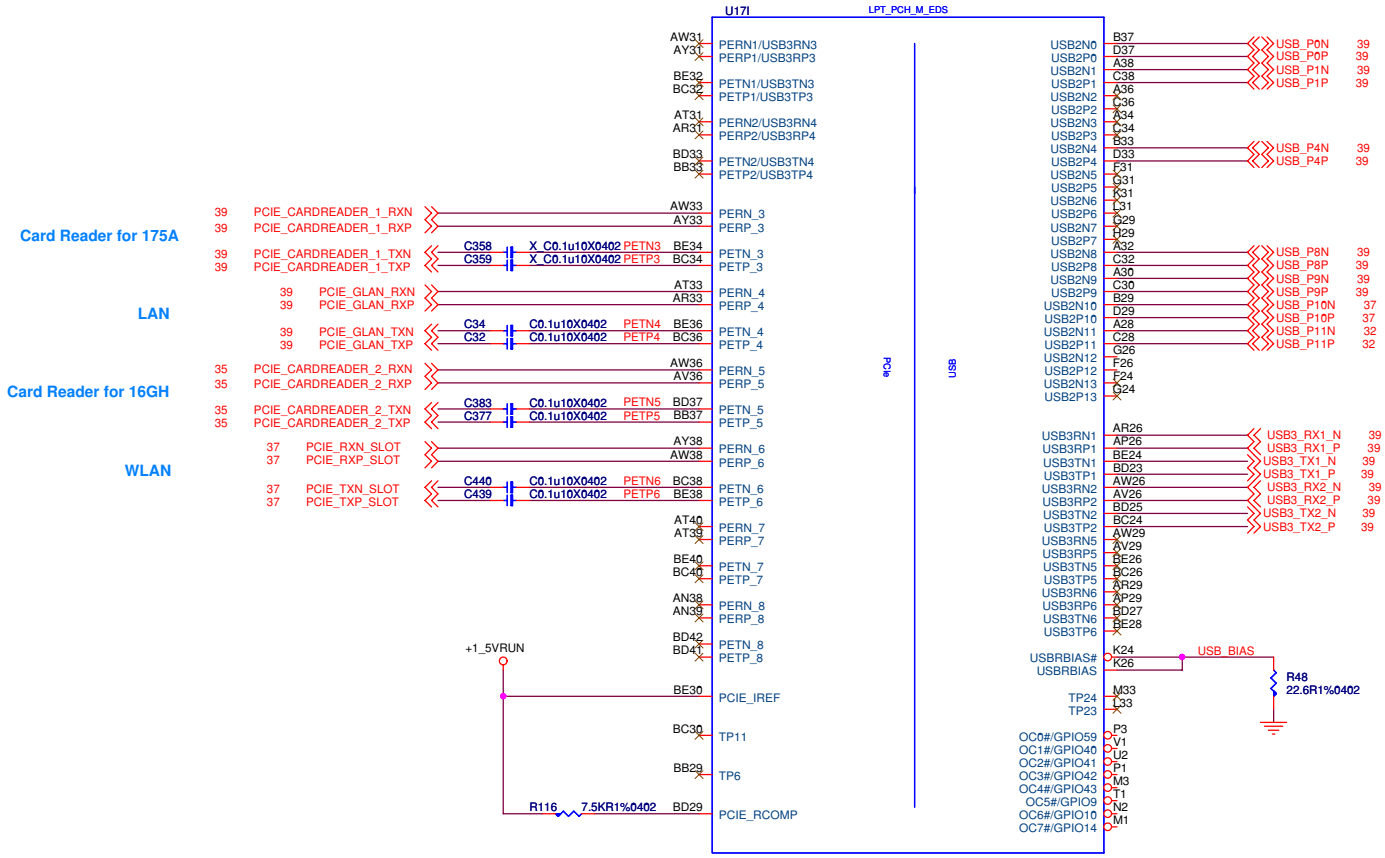

USB			
USB 2.0	USB 3.0	Device	Note
0	1	USB 3.0 Port 1	(16GHB/175AB)
1	2	USB 3.0 Port 2	(16GHB/175AB)
2			NC
3			NC
4		USB 2.0 Port	(16GHB)
5			NC
6			NC
7			NC
8		USB 2.0 Port	(175AE)
9		USB 2.0 Port	(16GHA/175AA)
10		WLAN	
11		WebCam	
12			NC
13			NC
	3		NC
	4		NC
	5		NC
	6		NC

Title: PCH-7 (PCIE,USB)

Size: Custom | Document Number: MS-175A1 | Rev: 11

Date: Monday, January 06, 2014 | Sheet 28 of 59

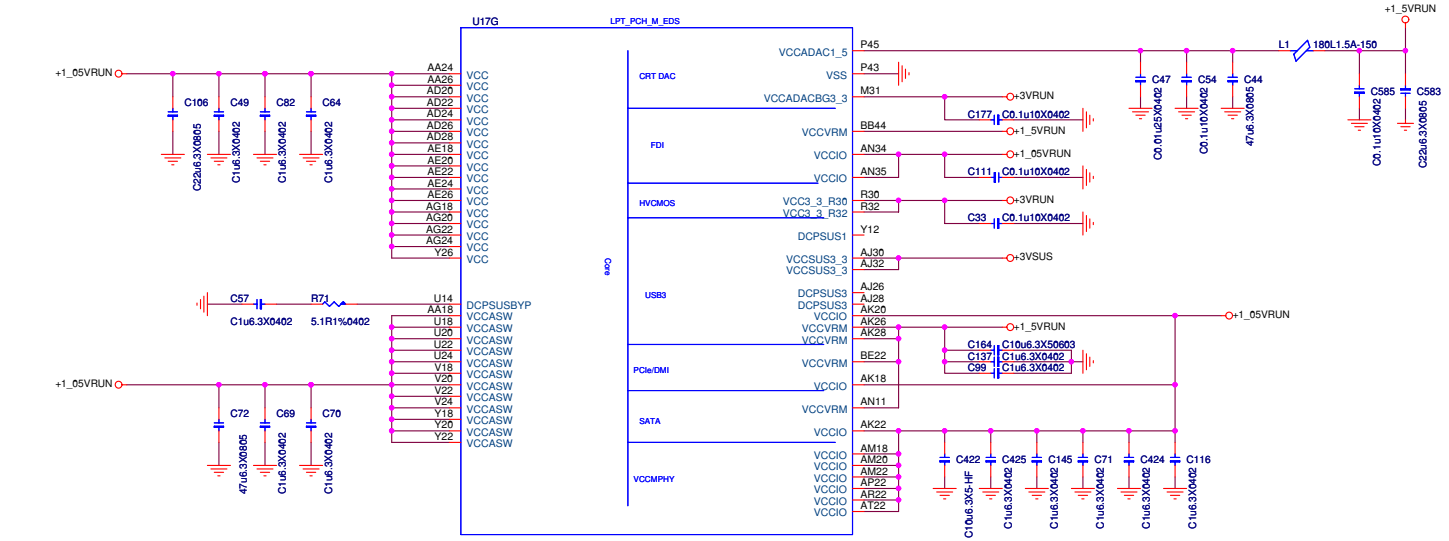

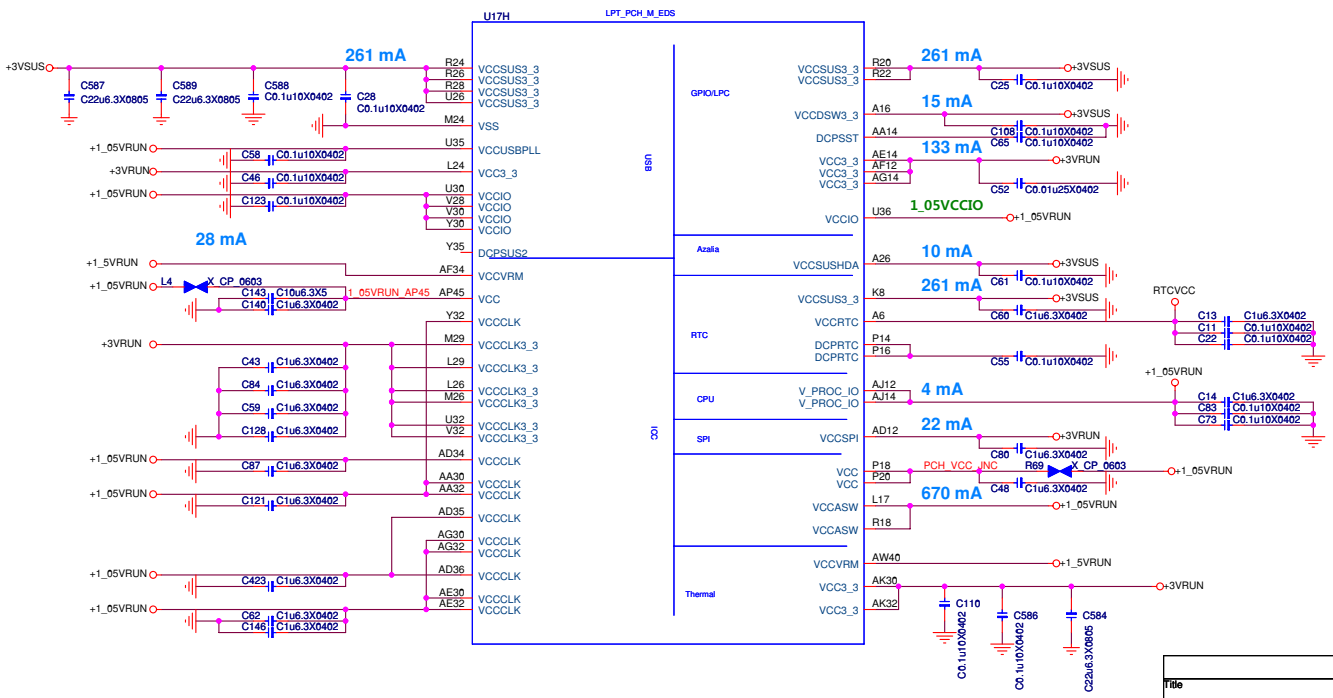

Title	PCH-8 (Power)		
Size: Custom	Document Number: MS-175A1		Rev: 11
Date: Friday, January 10, 2014	Sheet 29 of 59		

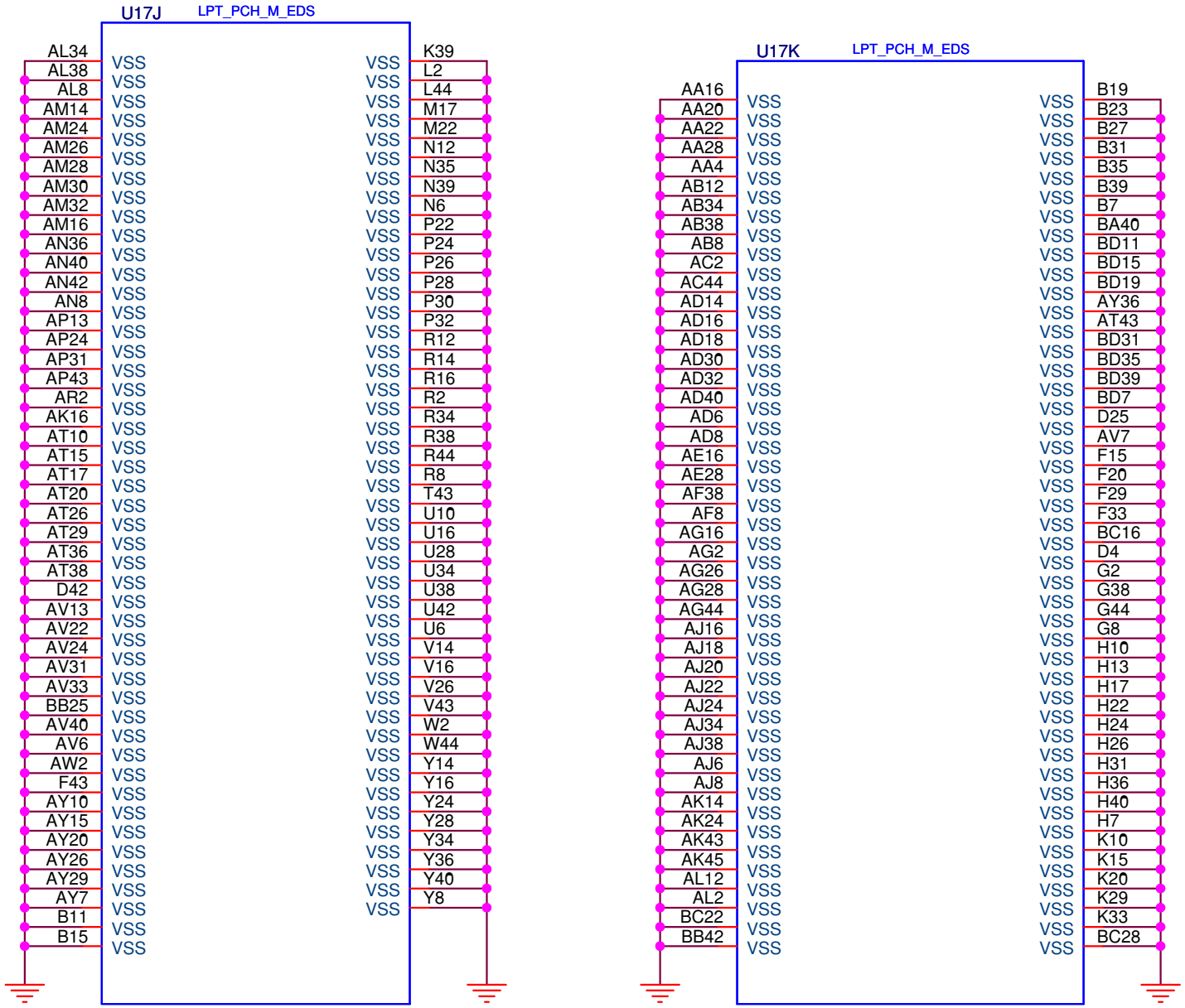

Title	PCH-9 (GND)		
Size Custom	Document Number MS-175A1		Rev 11
Date: Monday, January 06, 2014		Sheet 30 of 59	

eDP to LVDS

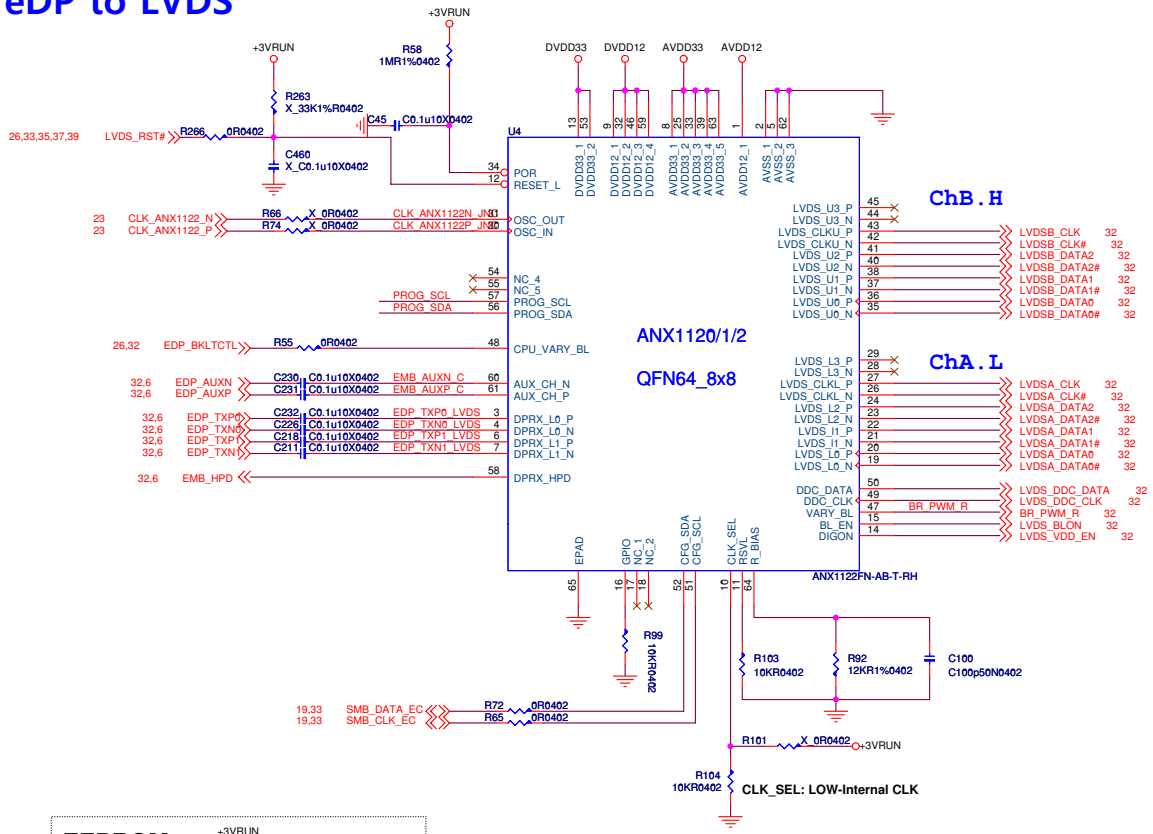

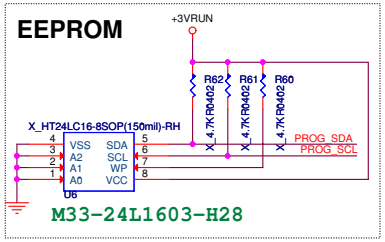

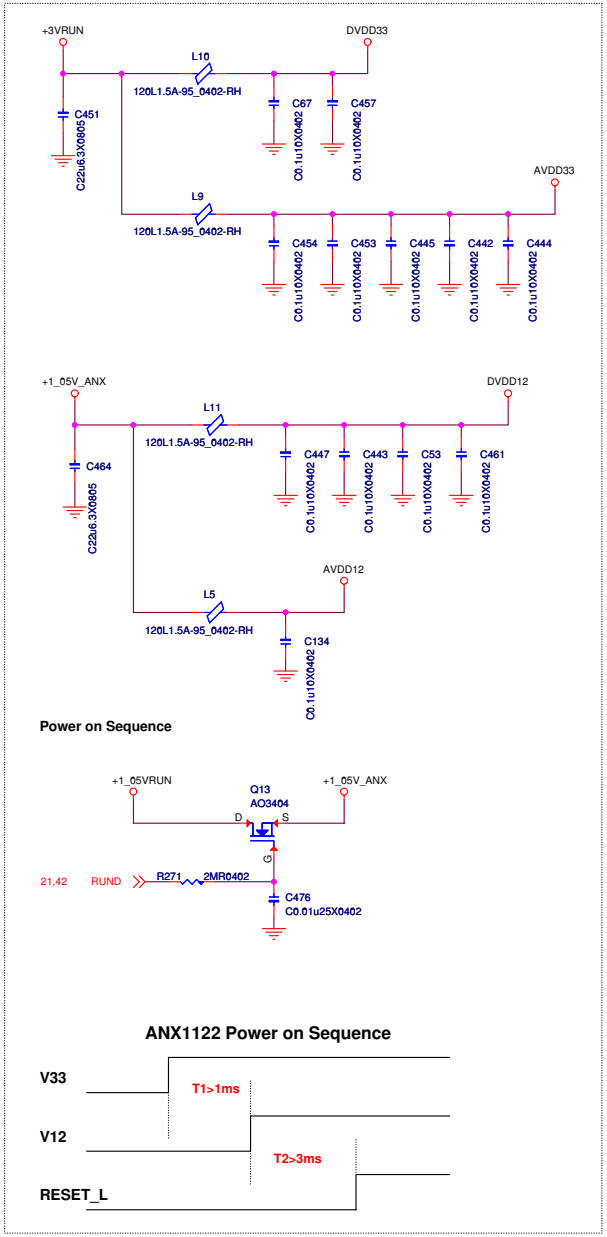

Title	eDP / LVDS (ANX1122)	
Size: Custom	Document Number: MS-175A1	Rev: 11
Date: Monday, January 06, 2014	Sheet 31 of 59	

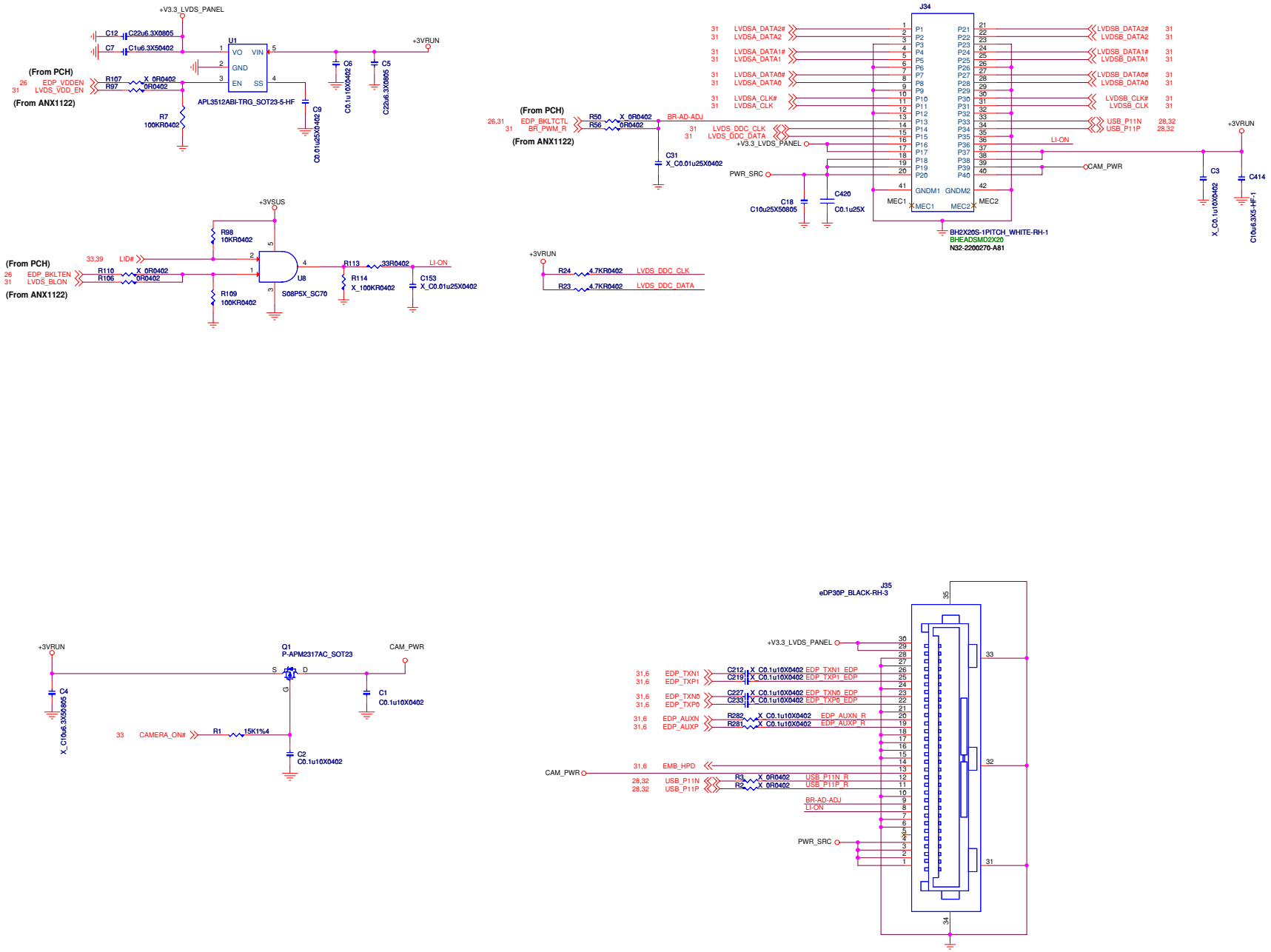

Title	PCH-10 (Strap)		
Size C	Document Number MS-175A1		Rev 11
Date: Friday, January 10, 2014		Sheet 32 of 59	

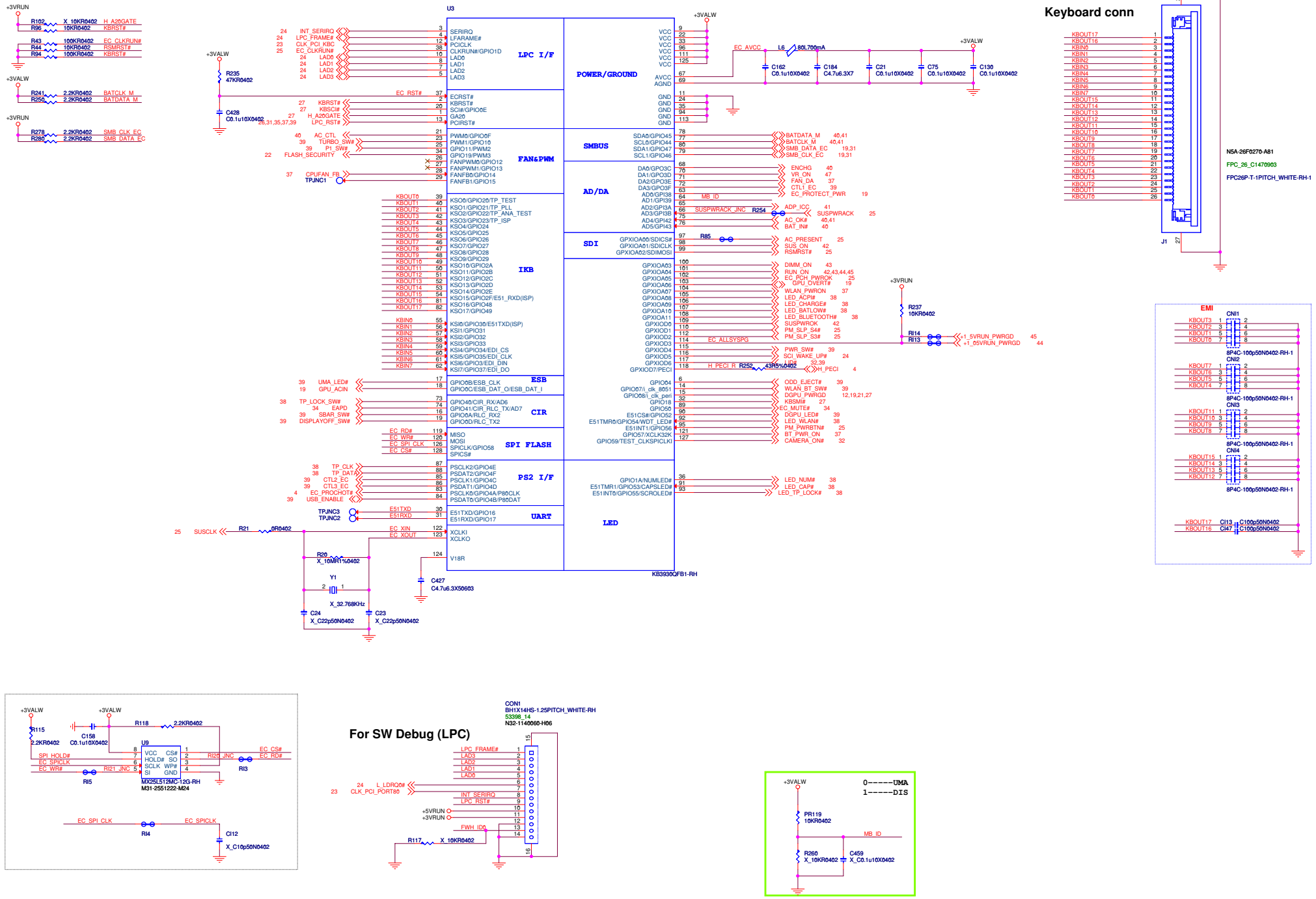
Keyboard conn
For SW Debug (LPC)
U3
KB3930QFB1-RH
LPC I/F
POWER/GROUND
SMBUS
FAN&PWM
AD/DA
SDI
IKB
ESB
CIR
SPI FLASH
PS2 I/F
UART
LED
N5A-26F0270-A81
FPC_26_C1470903
FPC26P-T-1PITCH_WHITE-RH-1
EMI
8P4C-100p50N0402-RH-1
CON1
BH1X14HS-1.25PITCH_WHITE-RH
53398_14
N32-1140060-H06
MX25L512MC-12G-RH
M31-2551222-M24
0-----UMA
1-----DIS
EC (KB3930QFB1)
MS-175A1
Monday, January 06, 2014
Sheet 33 of 59

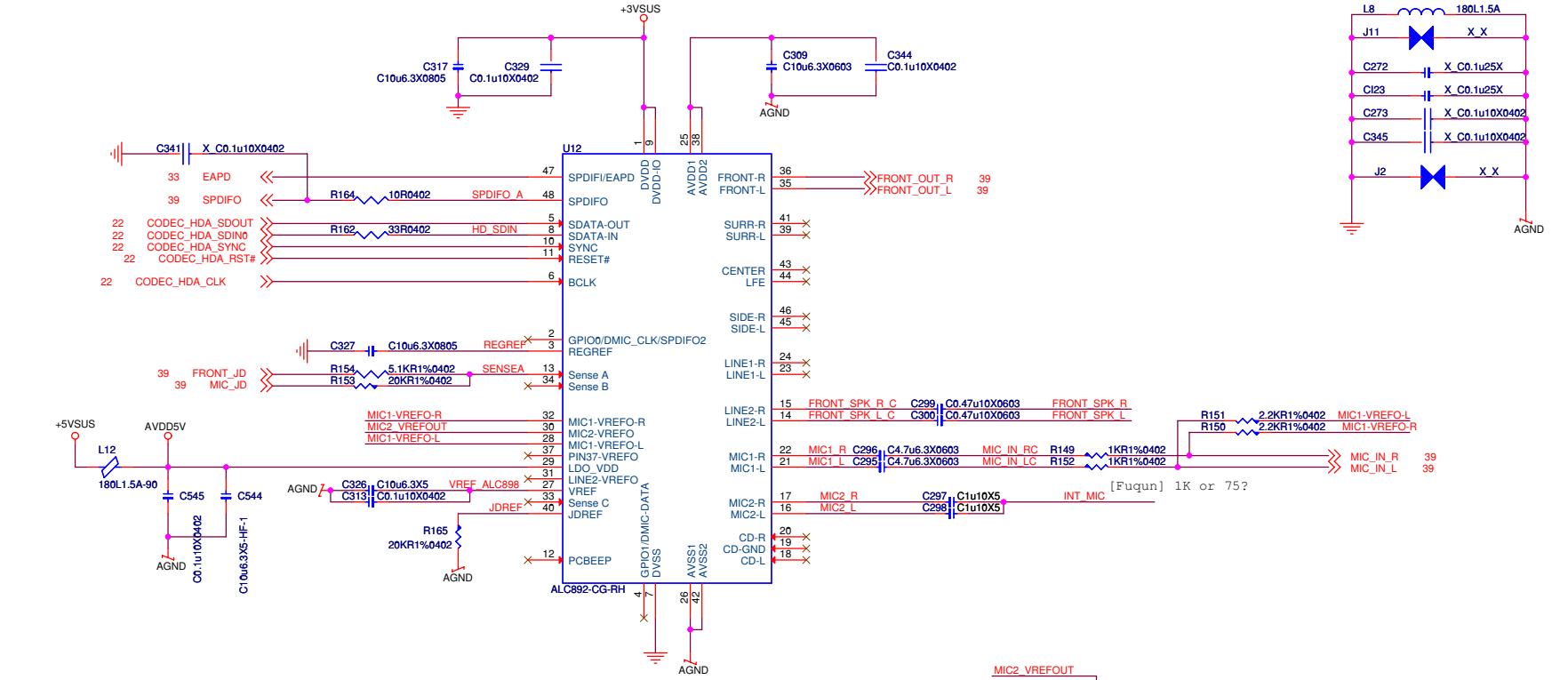

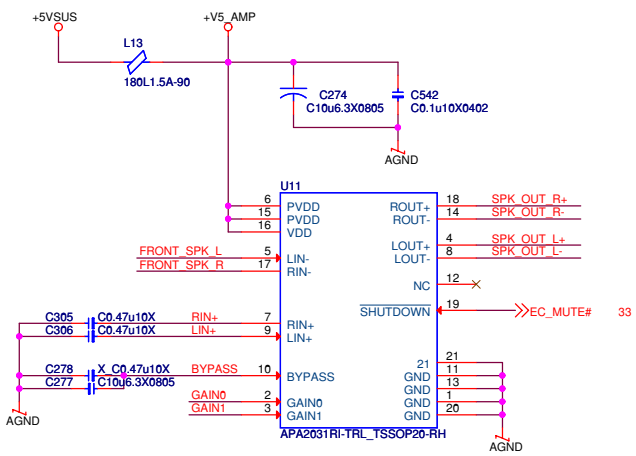

For APA2031

Av	GAIN0	GAIN1
6dB	0	0
10dB	0	1
15.6dB	1	0
21.6dB	1	1
4.3dB	X	X

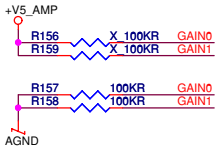

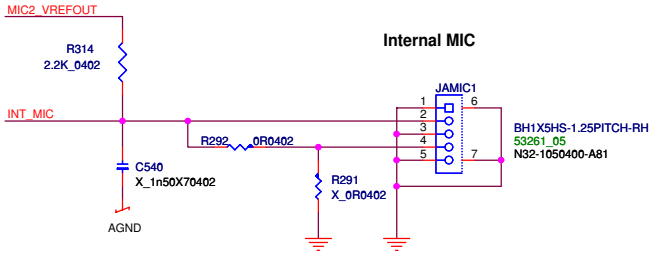

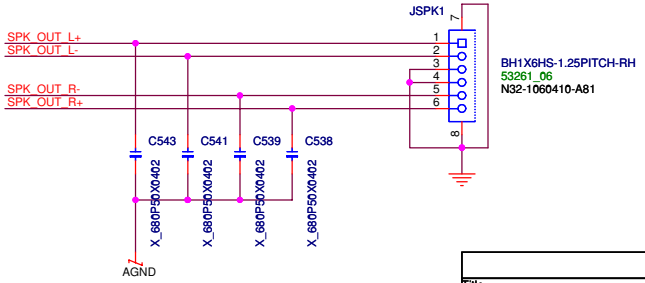

Title	Audio CODEC/Audio AMP		
Size Custom	Document Number MS-175A1		Rev 11
Date: Monday, January 06, 2014	Sheet 34 of 59		

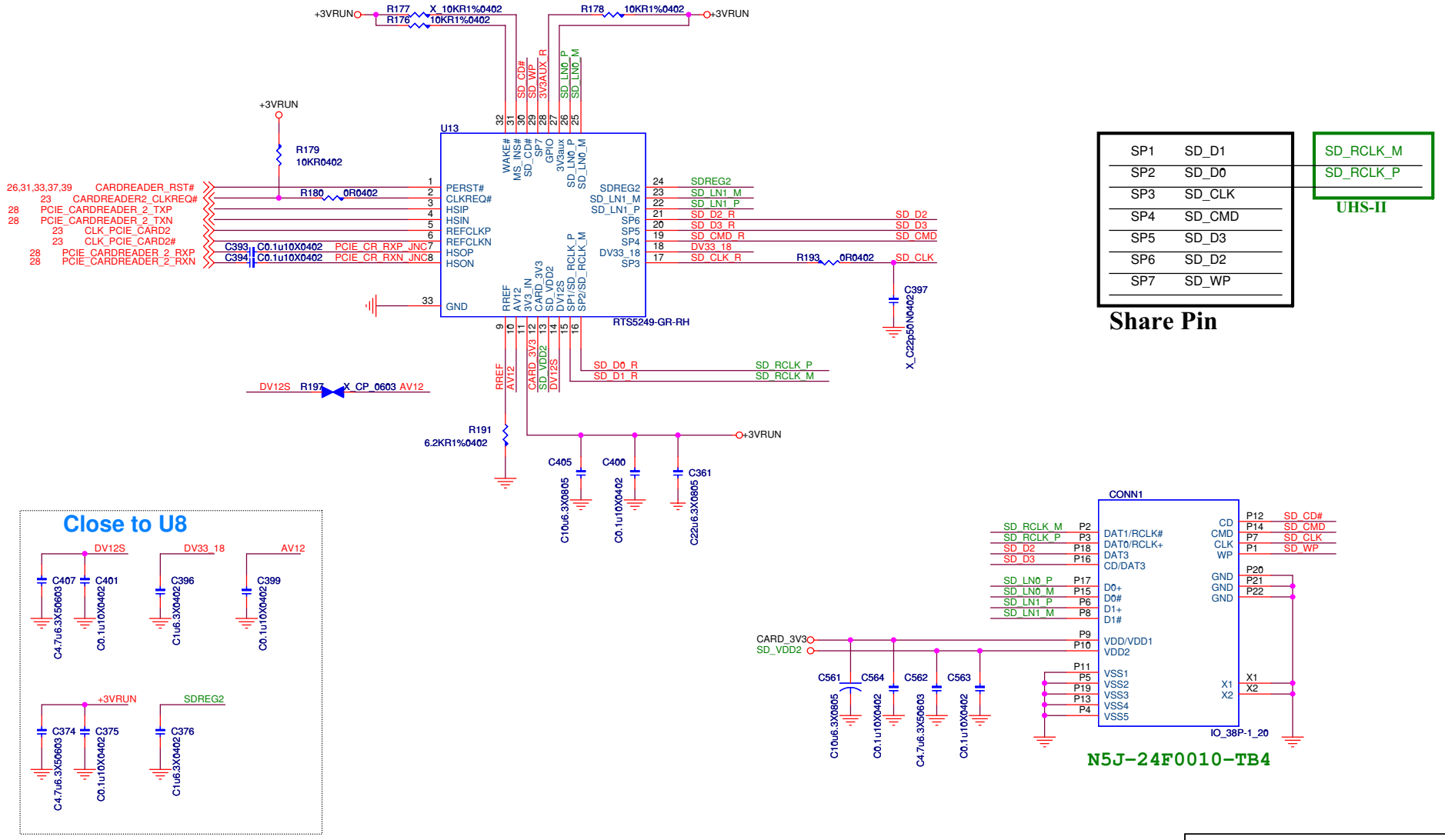

Title	Card Reader		
Size: Custom	Document Number: MS-175A1		Rev: 11
Date: Monday, January 06, 2014	Sheet 35 of 59		

SATA HDD

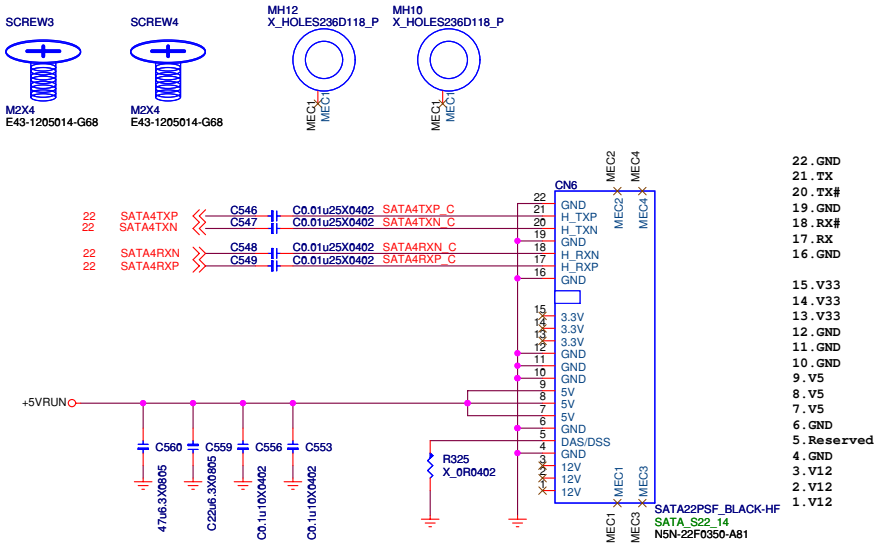

SATA ODD

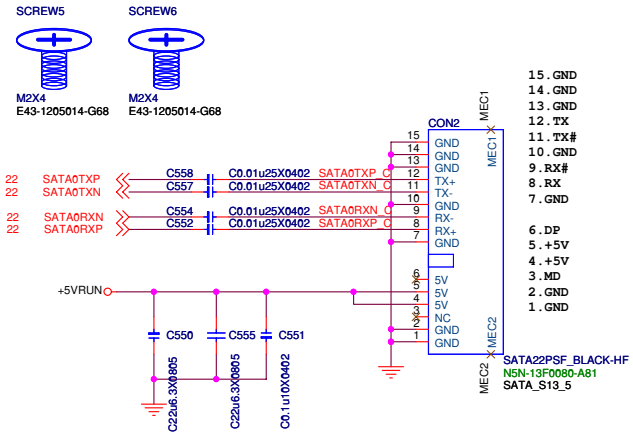

mSATA SSD

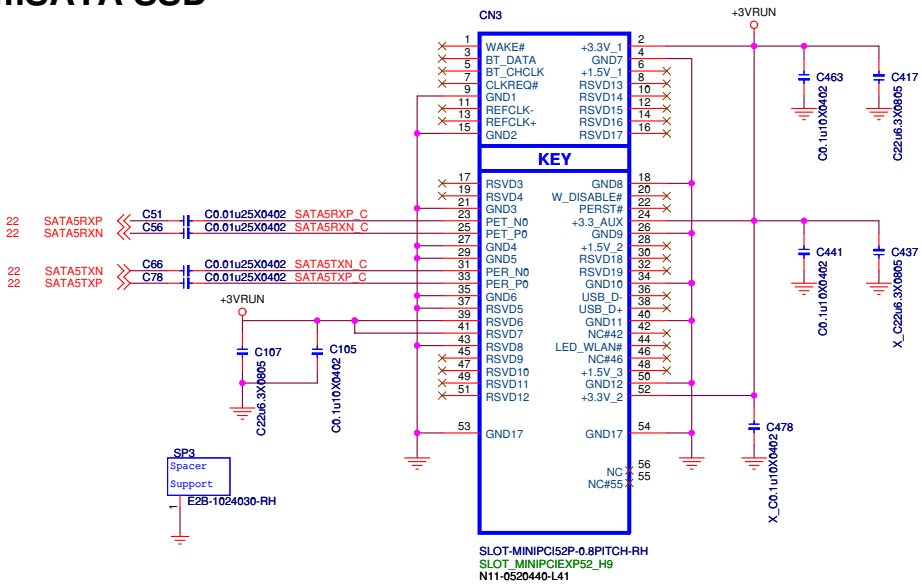

Title	HDD/ODD/SSD		
Size: Custom	Document Number: MS-175A1		Rev: 11
Date: Friday, January 10, 2014		Sheet 36 of 59	

[Fuqun] ME change WLAN connect P/N from N11-0520210-K06 to N11-0520450-L41

WLAN CARD

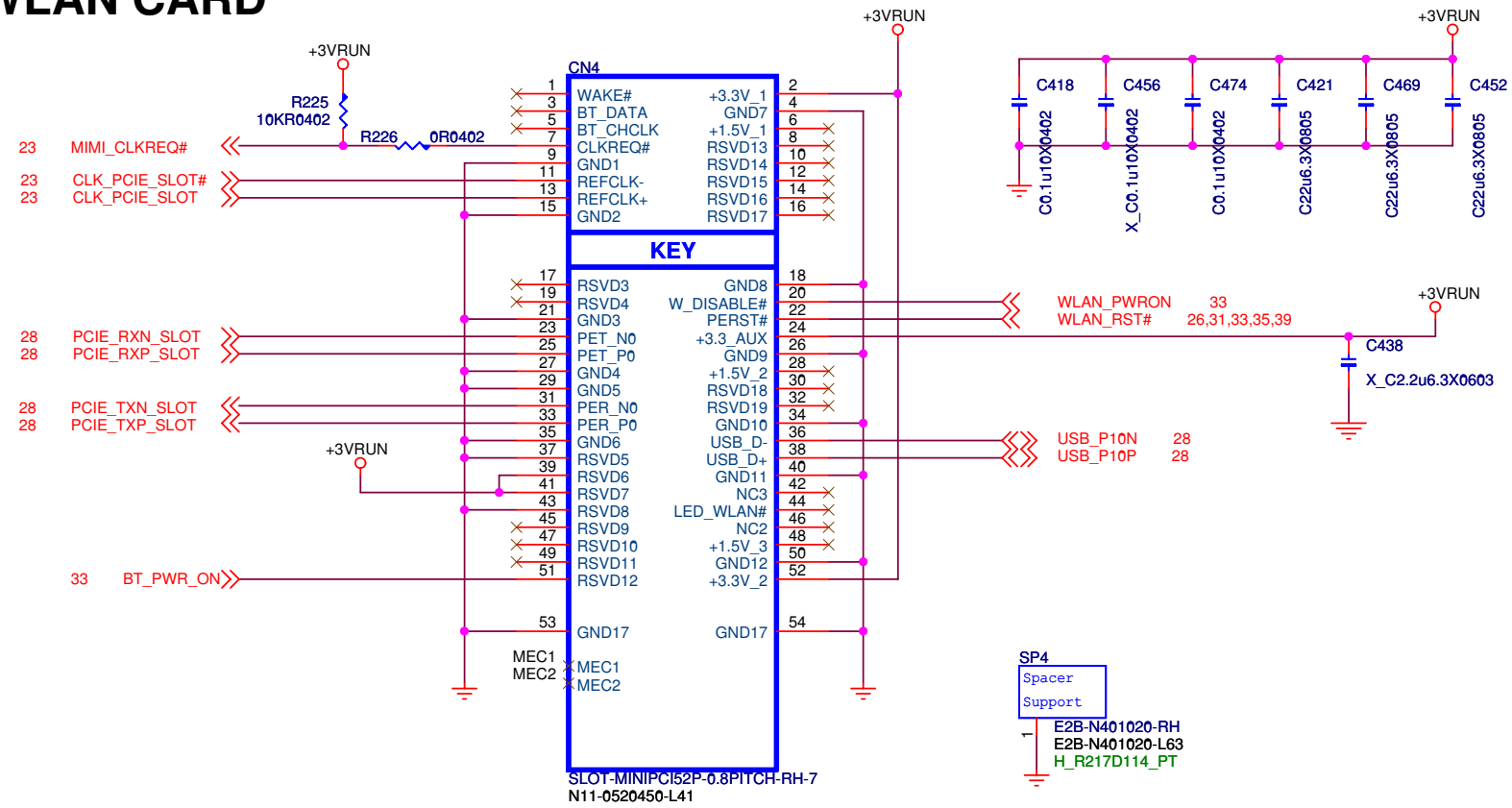

CPU FAN

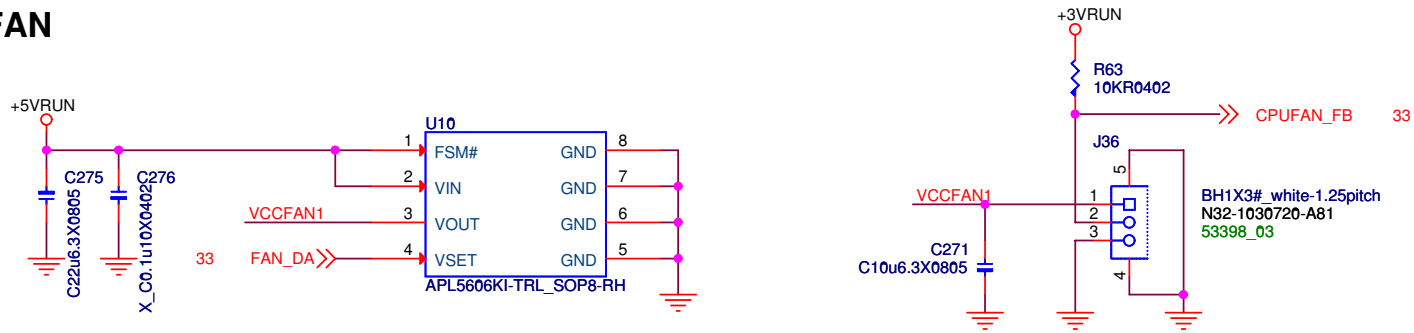

Title	WALN/FAN	
Size: Custom	Document Number: MS-175A1	Rev: 11
Date: Monday, January 06, 2014	Sheet 37 of 59	

For 16GH

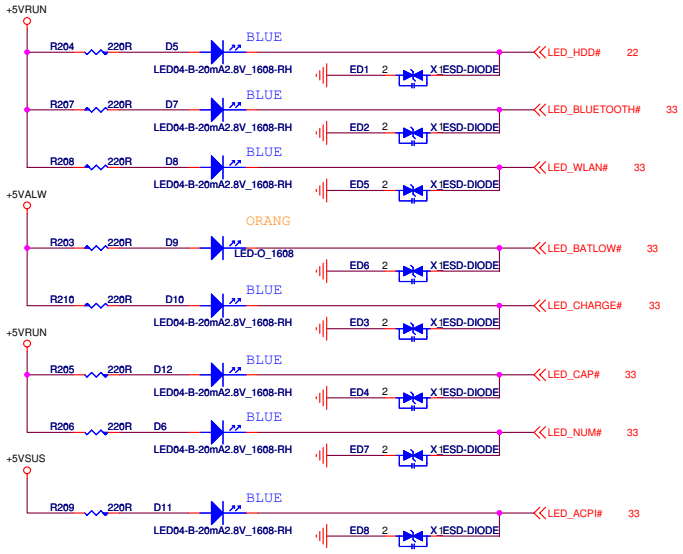

For MS-175AD board

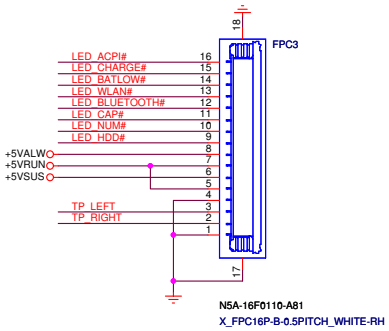

For 175X

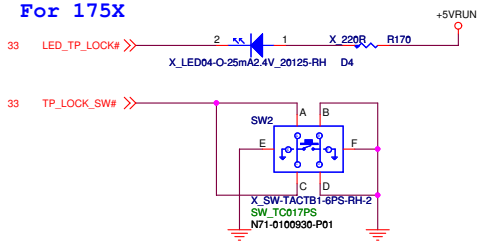

Touch Pad

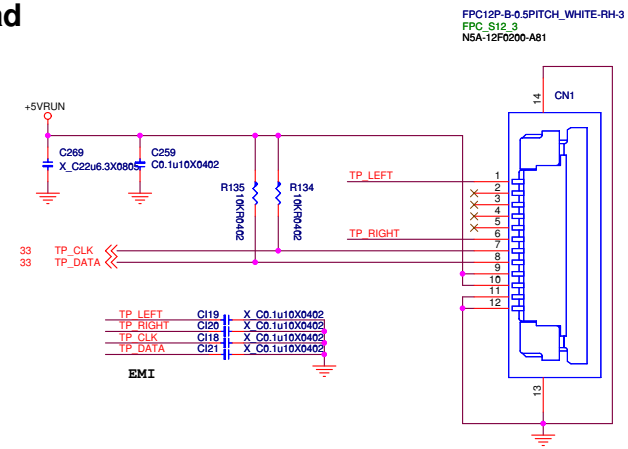

For 16GH

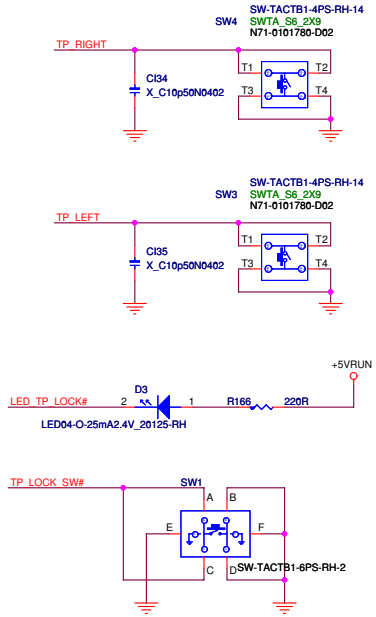

Title	LED/TP		
Size: Custom	Document Number: MS-175A1		Rev: 11
Date: Monday, January 06, 2014	Sheet 38 of 59		

175AB: Audio/HDMI/USB 3.0

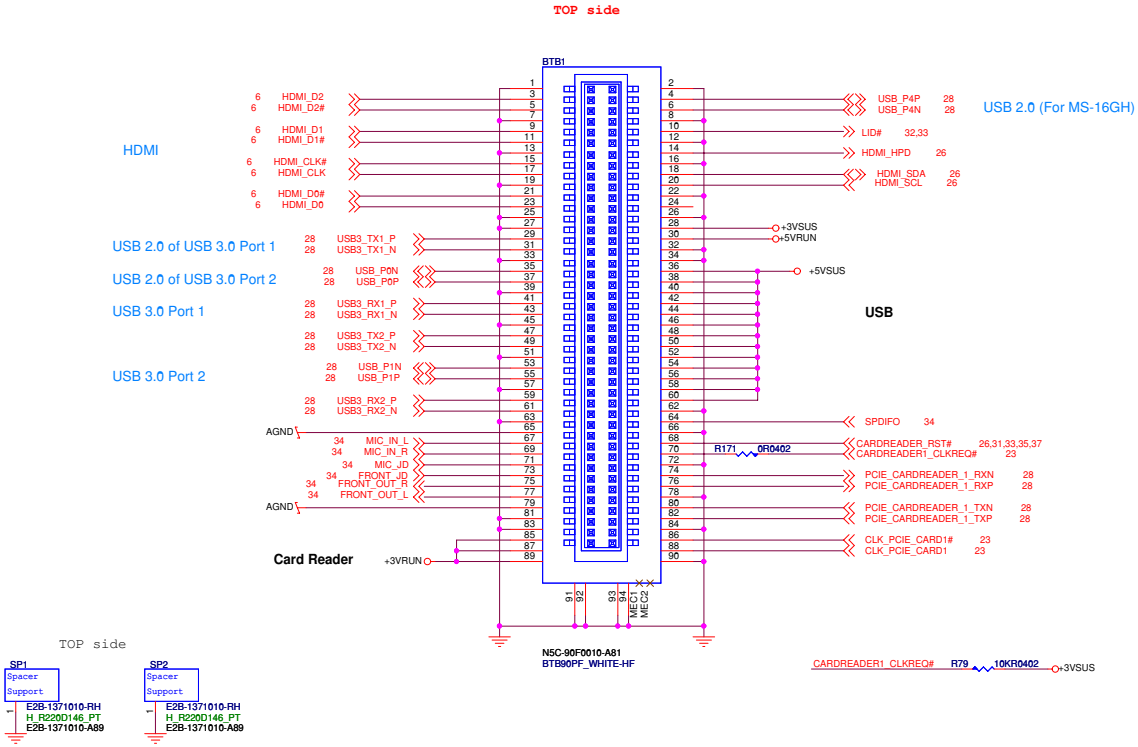

175AC: Power Key Board

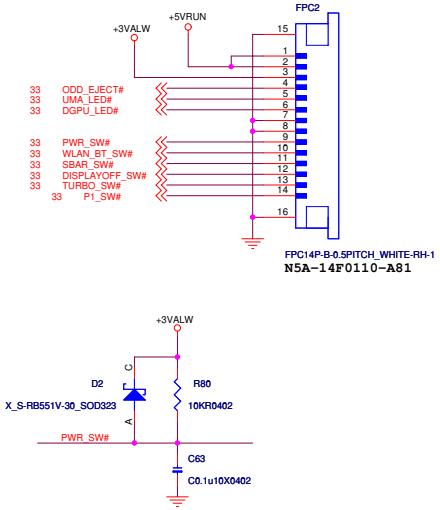

175AA: CRT/USB/WLAN/BT/LAN

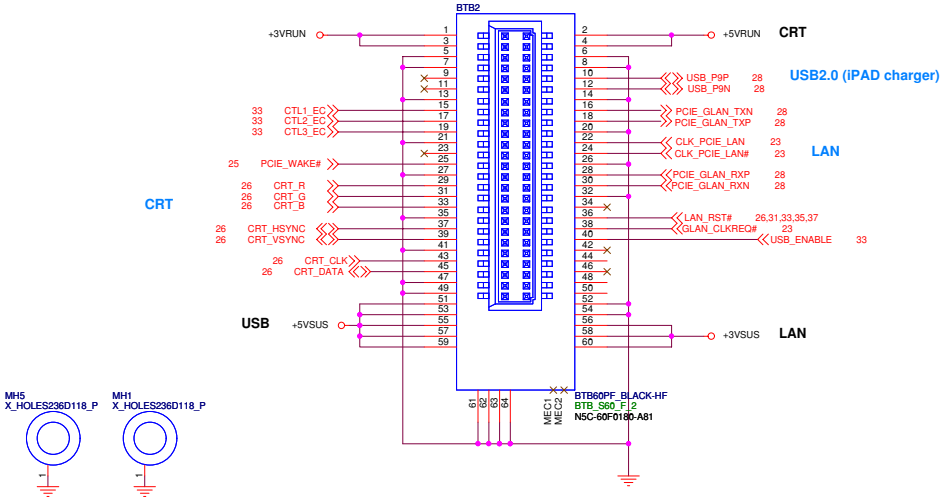

MS-175AE Board

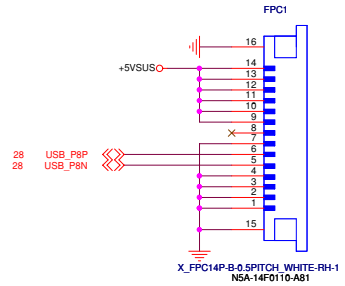

Title	BTB Connector
Size	Custom
Document Number	MS-175A1
Rev	11
Date:	Monday, January 06, 2014
Sheet	39 of 59

Battery Select

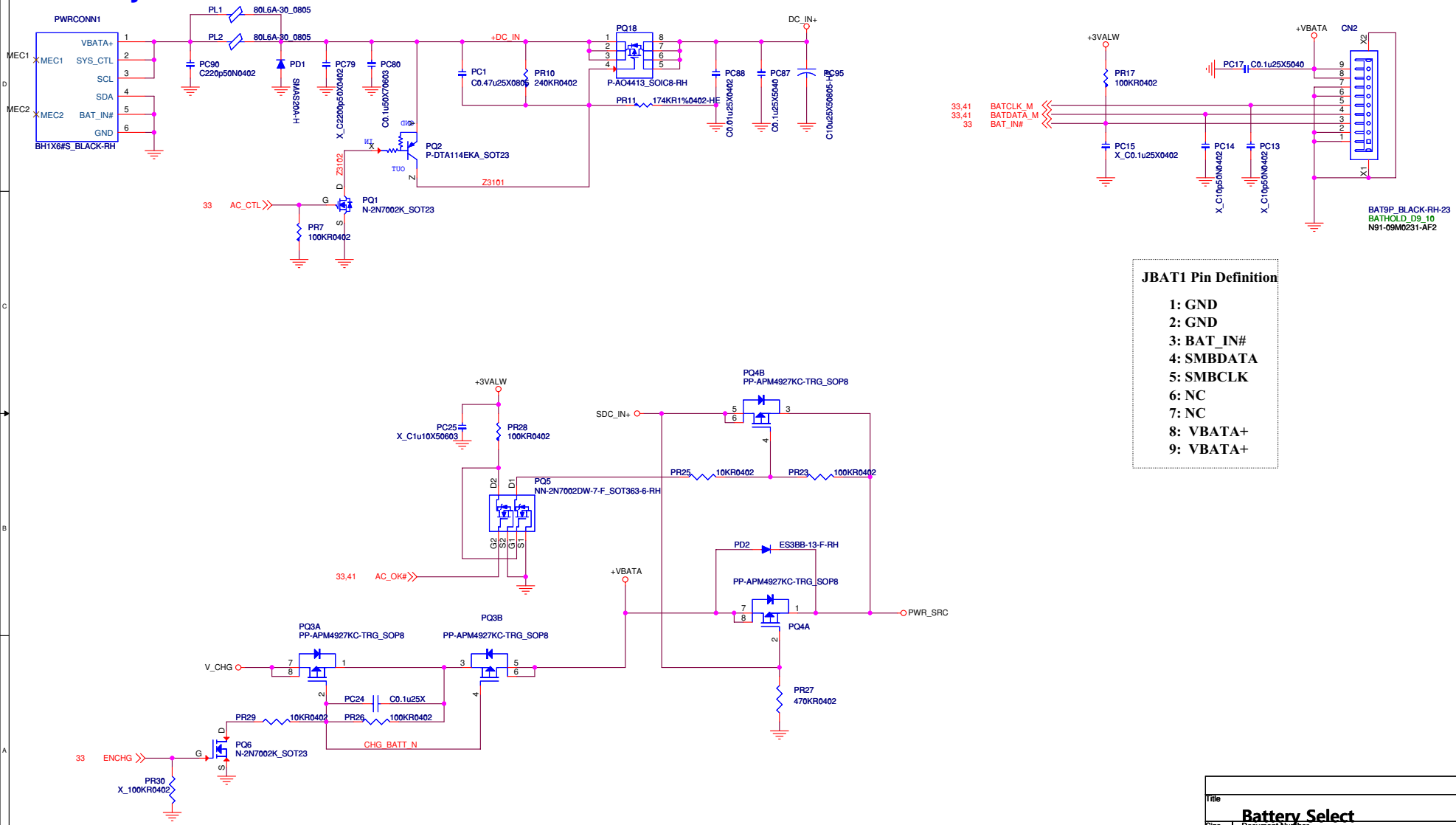

JBAT1 Pin Definition

1: GND
2: GND
3: BAT_IN#
4: SMBDATA
5: SMBCLK
6: NC
7: NC
8: VBATA+
9: VBATA+

Title	Battery Select		
Size: Custom	Document Number: MS-175A1		Rev: 10
Date: Monday, January 06, 2014	Sheet 40 of 59		

Battery Charger

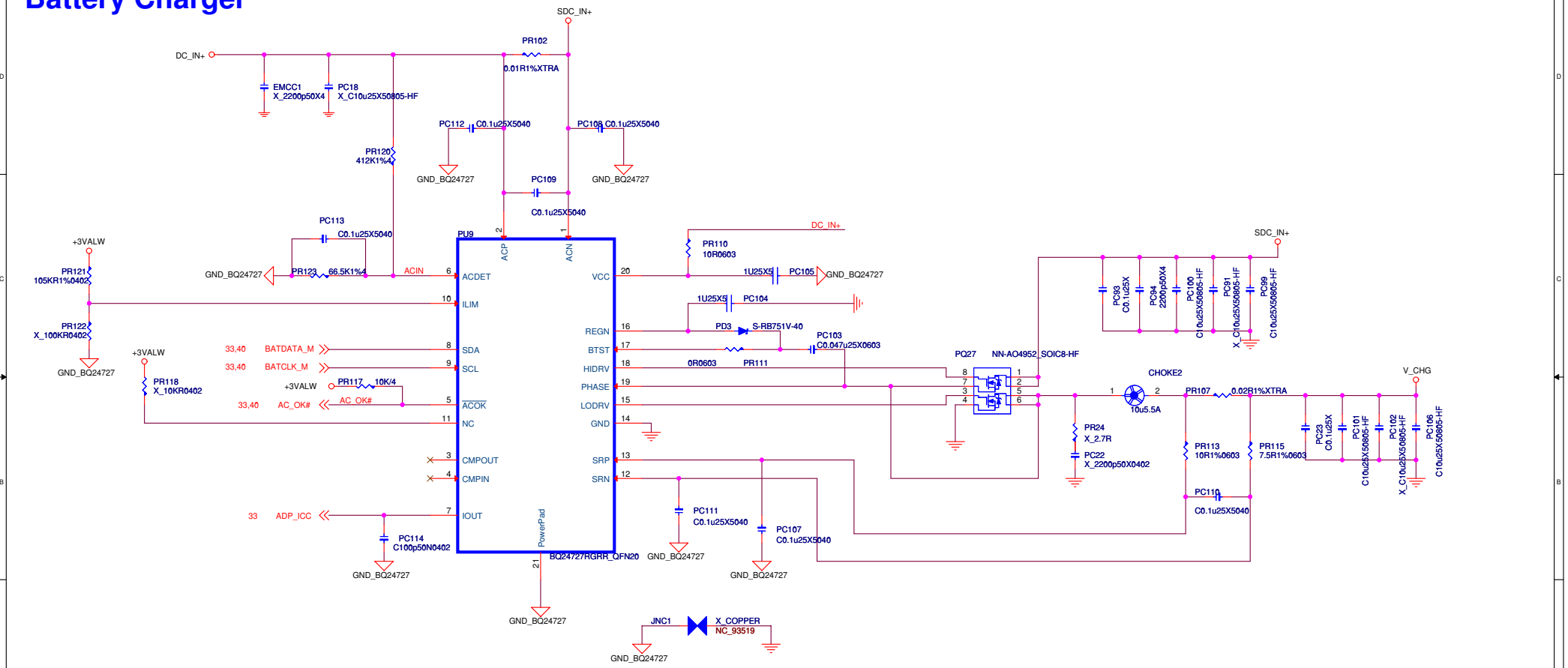

Title	Charger		
Size: Custom	Document Number: MS-175A1		Rev: 10
Date: Monday, January 06, 2014	Sheet 41 of 59		

System Power

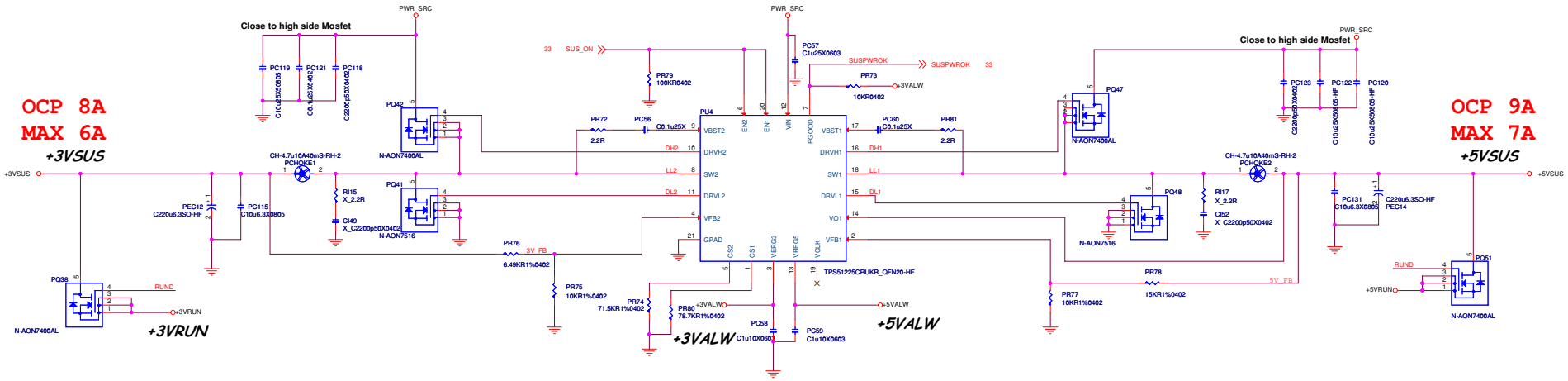

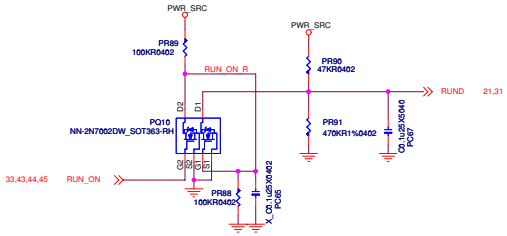

Title	System Power		
Size: Custom	Document Number: MS-175A1		Rev: 11
Date: Monday, January 06, 2014	Sheet 42 of 59		

+1.35VDIMM

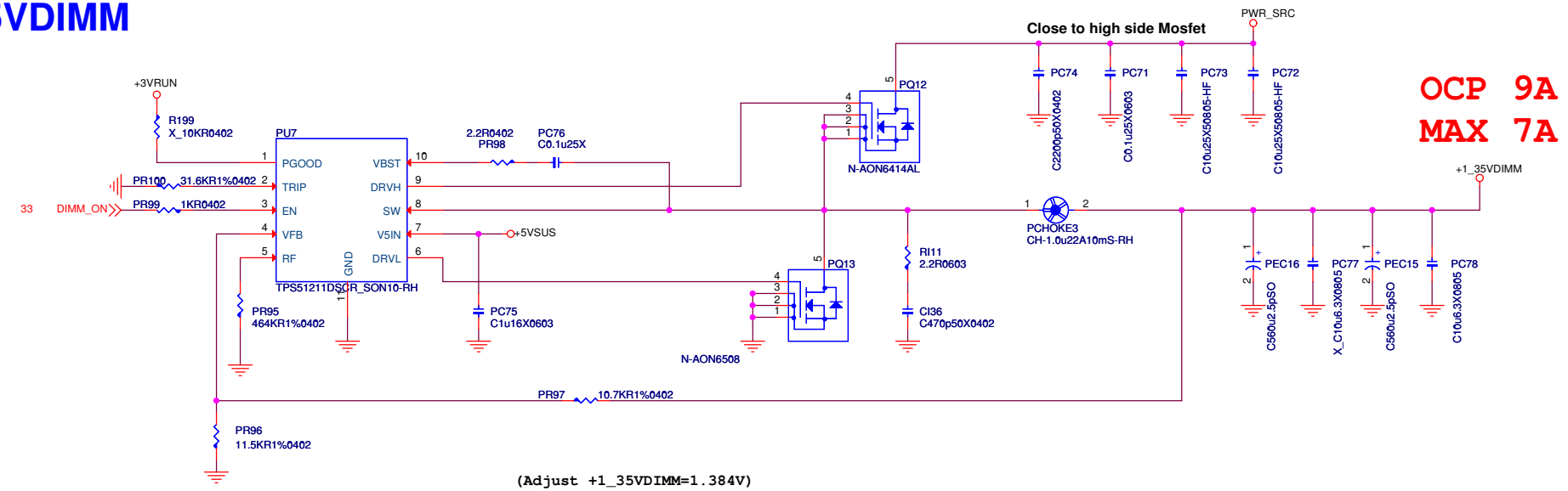

(Adjust +1_35VDIMM=1.384V)

+0.675VRUN

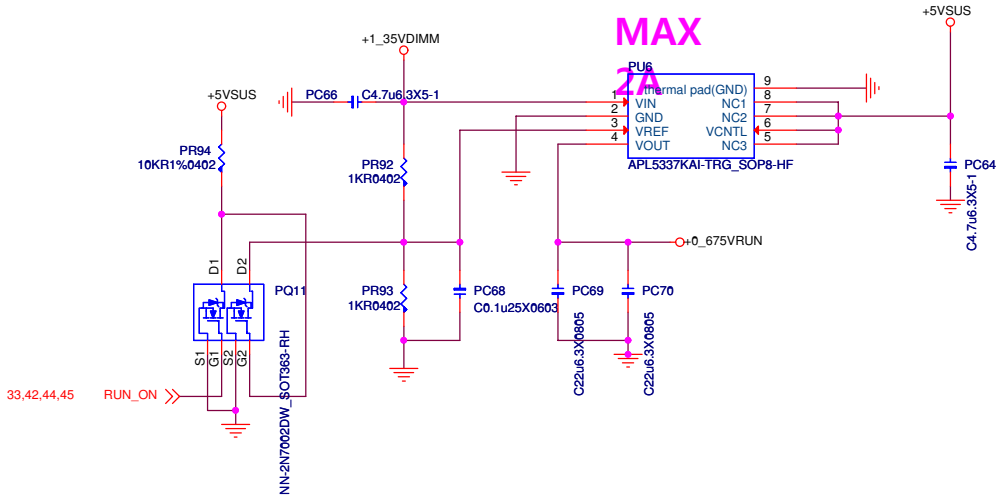

Title	+1_35VDIMM/+0_675VRUN	
Size: Custom	Document Number: MS-175A1	Rev: 11
Date: Monday, January 06, 2014	Sheet 43 of 59	

+1.05VRUN

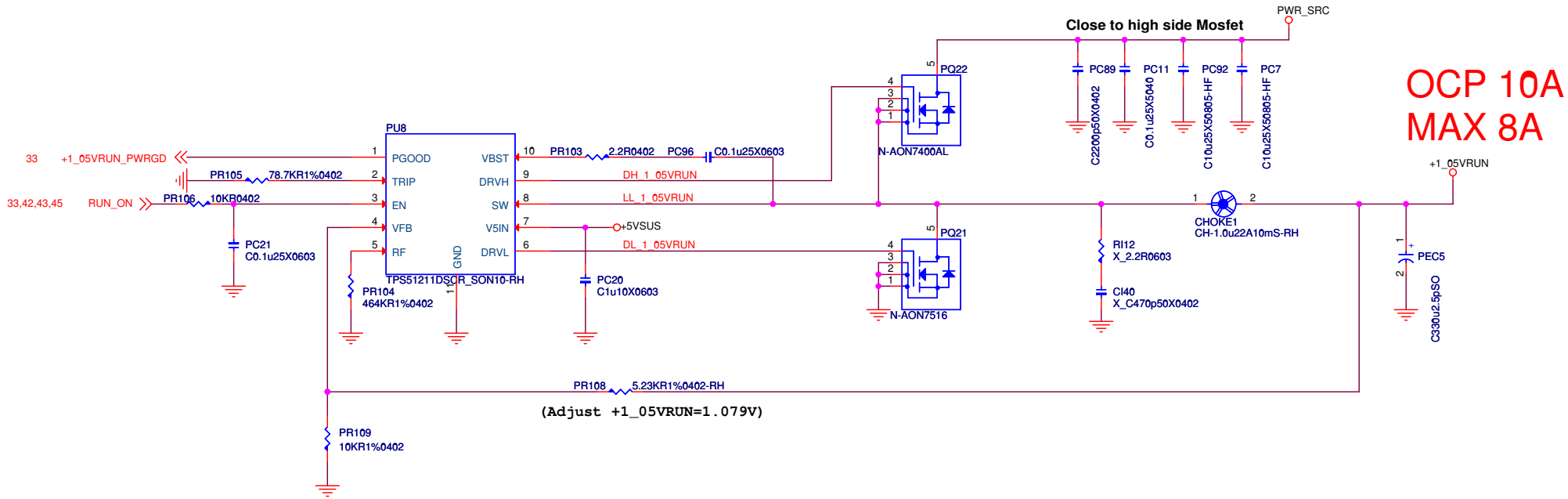

Title	+1_05VRUN	
Size: Custom	Document Number: MS-175A1	Rev: 11
Date: Monday, January 06, 2014	Sheet 44 of 59	

+1.5VRUN

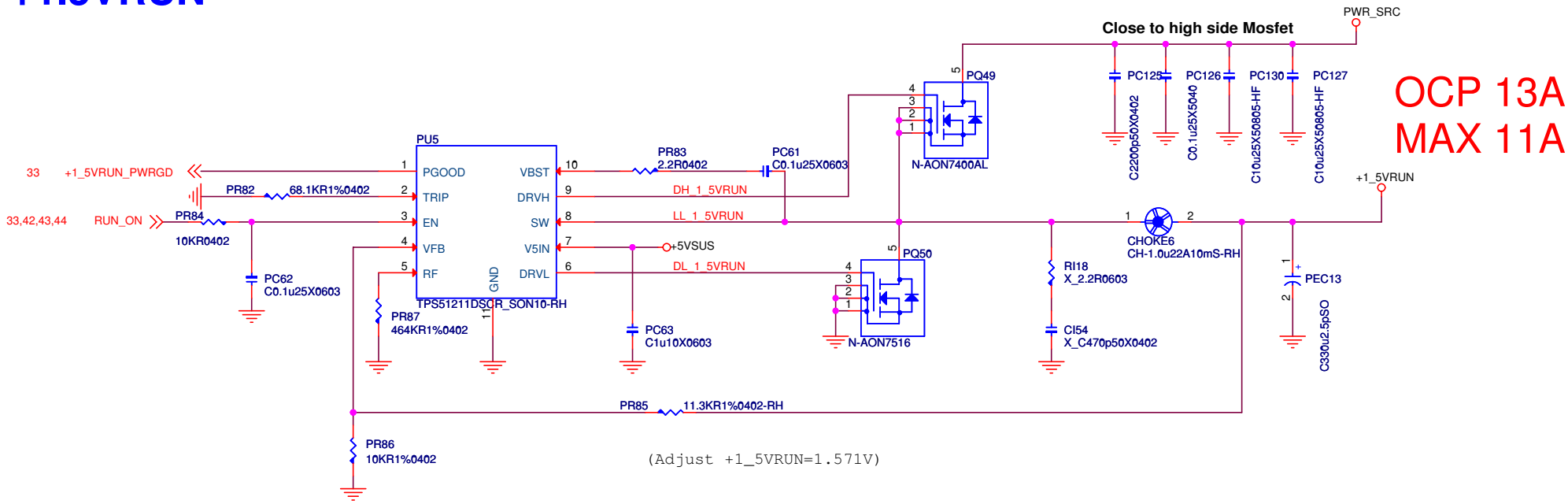

Title	+1_5VRUN	
Size: Custom	Document Number: MS-175A1	Rev: 11
Date: Monday, January 06, 2014	Sheet 45 of 59	

DGPU POWER / UP1642P

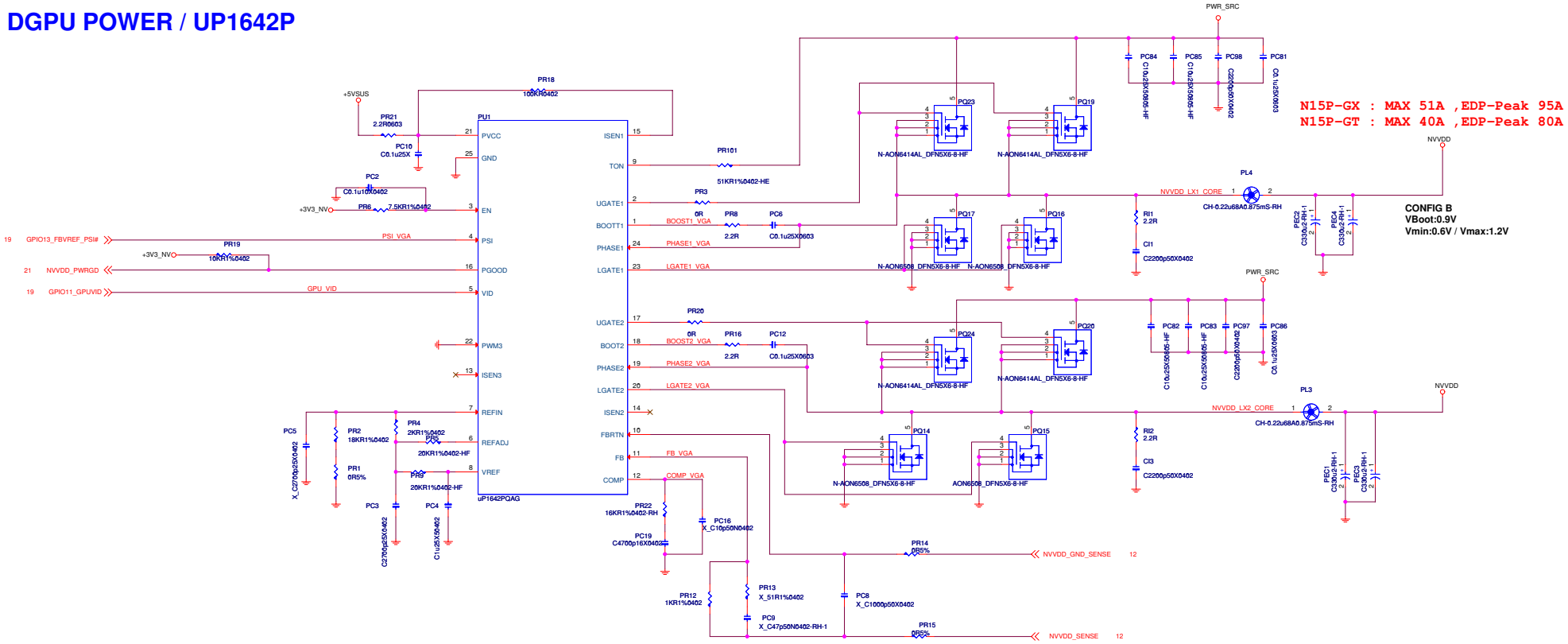

Title	DGPU Power
Size	Custom
Document Number	MS-175A1
Rev	11
Date:	Monday, January 06, 2014
Sheet	46 of 59

CPU Core Power(ISL95812HRZ)

OCP 103A
MAX 85A

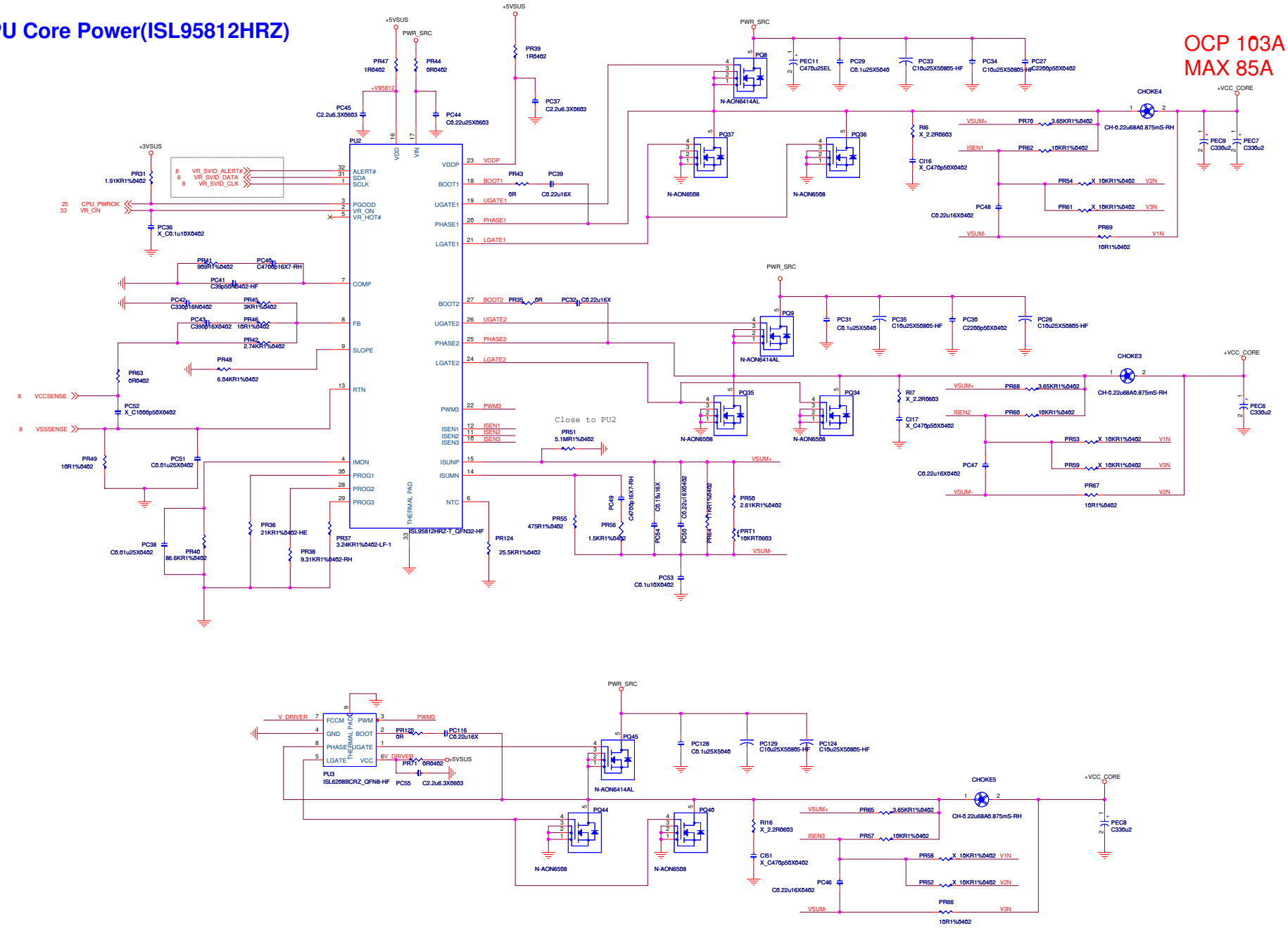

Title	CPU Power
Size / Document Number	Custom / MS-175A1
Rev	11
Date:	Monday, January 06, 2014
Sheet	47 of 59

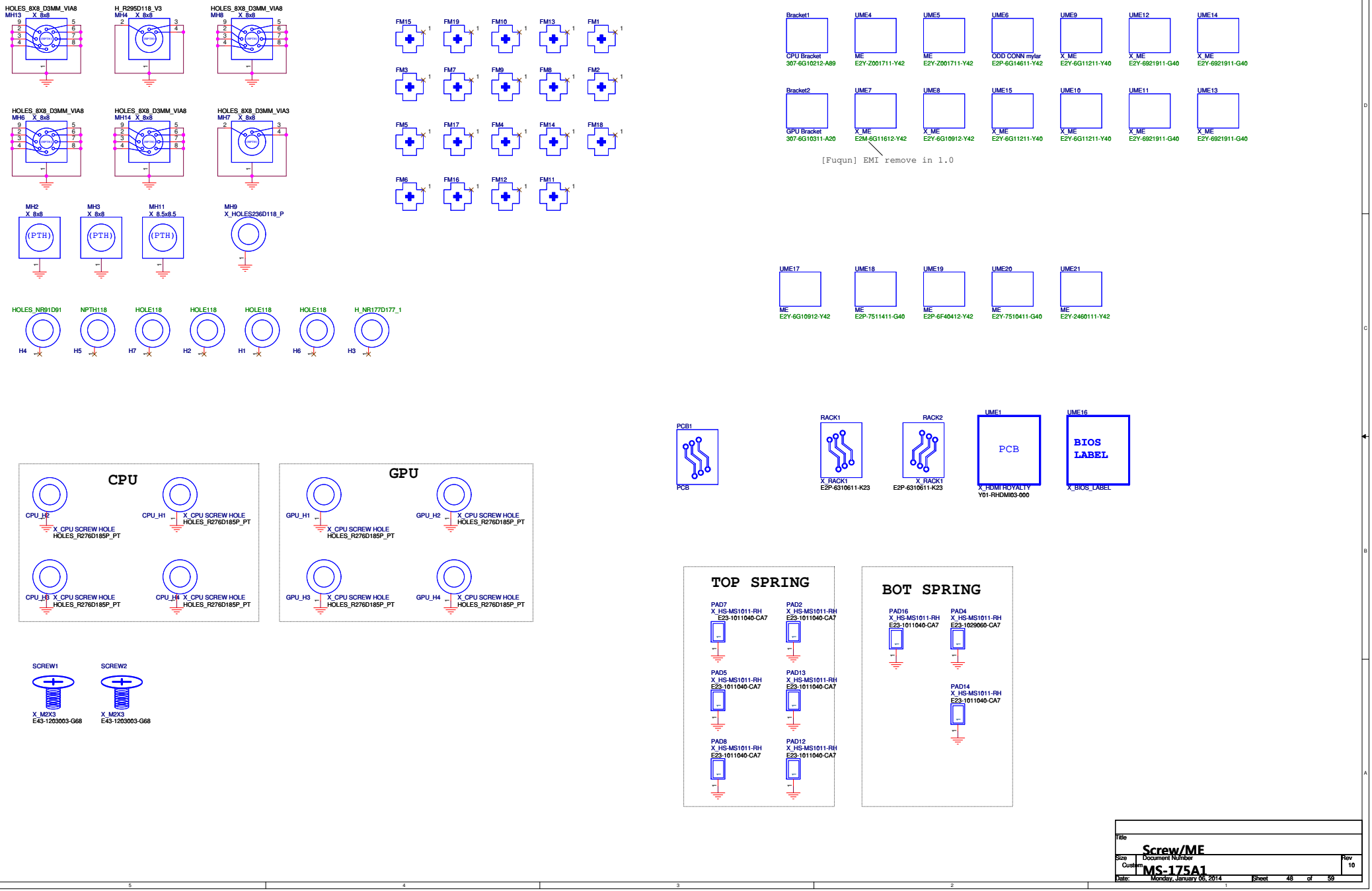

Title	Screw/ME	
Size: Custom	Document Number: MS-175A1	Rev: 10
Date: Monday, January 06, 2014	Sheet 48 of 59	

Top Spring

PAD6
X_HS-MS1011-RH
E23-1011040-CA7

PAD10
X_HS-MS1011-RH
E23-5551040-CA7

PAD1
X_HS-MS1011-RH
E23-5551040-CA7

BOT Spring

PAD11
X_HS-MS1011-RH
E23-1011040-CA7

PAD15
X_HS-MS1011-RH
E23-1011040-CA7

PAD3
X_HS-MS1011-RH
E23-5551040-CA7

PAD9
X_HS-MS1011-RH
E23-5551040-CA7

PWR_SRC

Close to PQ31, PQ34

CI45	X_C0.1u25X0402
CI8	X_C0.1u25X0402
CI39	X_C0.1u25X0402

SDC_IN+

CI7	X_C0.1u25X0402
CI43	X_C0.1u25X0402

PWR_SRC

CI2	X_C0.1u25X0402
CI14	X_C0.1u25X0402

+5VSUS

CI44	X_C0.1u25X0402
CI27	X_C0.1u25X0402
CI46	X_C0.1u25X0402

+5VRUN

CI10	X_1000p50X4
CI56	X_C0.1u25X0402
CI55	X_C0.1u25X0402

+VBATA

CI6	X_C0.1u25X0402
CI4	X_C0.1u25X0402
CI42	X_C0.1u25X0402

FBVDDQ

CI24	X_C100p50N0402
CI50	X_C100p50N0402
CI53	X_C100p50N0402
CI22	X_C100p50N0402
CI15	X_C100p50N0402

+3VRUN

CI48	X_C0.1u25X0402
CI41	X_C0.1u25X0402
CI9	X_C0.1u25X0402

+3VSUS

CI5	X_C0.1u25X0402
CI11	X_C0.1u25X0402
CI37	X_C0.1u25X0402

+1_35VDIMM

CI33	470p50X
CI31	470p50X
CI38	X_C100p50N0402
CI26	X_C100p50N0402
CI28	470p50X
CI25	X_C100p50N0402
CI30	470p50X
CI29	470p50X
CI32	470p50X

[Fuqun] EMI add in 1.0

+1_35VDIMM

CI58	X_C0.1u10X0402
CI57	X_C0.1u10X0402
CI59	X_C0.1u10X0402
CI61	X_C0.1u10X0402
CI60	X_C0.1u10X0402
CI62	X_C0.1u10X0402

Title	EMI	
Size: Custom	Document Number: MS-175A1	Rev: 11
Date: Friday, January 10, 2014	Sheet 49 of 59	

Single-end

TOP

J30 — 2 / 1 — L1_6mil_45_Ohm — GND2 — X_H1X2M_BLACK-RH

J32 — 2 / 1 — L1_5mil_48_Ohm — GND2 — X_H1X2M_BLACK-RH

J33 — 2 / 1 — L1_4.5mil_50_Ohm — GND2 — X_H1X2M_BLACK-RH

IN3

J31 — 2 / 1 — L3_8mil_40_Ohm — GND2 — X_H1X2M_BLACK-RH

J29 — 2 / 1 — L3_6.5mil_45_Ohm — GND2 — X_H1X2M_BLACK-RH

J28 — 2 / 1 — L3_5mil_50_Ohm — GND2 — X_H1X2M_BLACK-RH

IN4

J10 — 2 / 1 — L4_8mil_40_Ohm — GND5 — X_H1X2M_BLACK-RH

J9 — 2 / 1 — L4_6.5mil_45_Ohm — GND5 — X_H1X2M_BLACK-RH

J8 — 2 / 1 — L4_5mil_50_Ohm — GND5 — X_H1X2M_BLACK-RH

BOTTOM

J20 — 2 / 1 — L6_8mil_37.5_Ohm — GND5 — X_H1X2M_BLACK-RH

J22 — 2 / 1 — L6_7mil_40_Ohm — GND5 — X_H1X2M_BLACK-RH

J19 — 2 / 1 — L6_6mil_45_Ohm — GND5 — X_H1X2M_BLACK-RH

J21 — 2 / 1 — L6_5mil_48_Ohm — GND5 — X_H1X2M_BLACK-RH

J23 — 2 / 1 — L6_4.5mil_50_Ohm — GND5 — X_H1X2M_BLACK-RH

Differential signal

TOP

J25 — L1_DIFF_6/9/6_80 Ohm+ / L1_DIFF_6/9/6_80 Ohm- — X_H1X4_black-RH — GND2

J13 — L1_DIFF_4.5/4.5/4.5_85 Ohm+ / L1_DIFF_4.5/4.5/4.5_85 Ohm- — X_H1X4_black-RH — GND2

J14 — L1_DIFF_4.5/6/4.5_90 Ohm+ / L1_DIFF_4.5/6/4.5_90 Ohm- — X_H1X4_black-RH — GND2

J3 — L1_DIFF_4.5/12/4.5_100 Ohm+ / L1_DIFF_4.5/12/4.5_100 Ohm- — X_H1X4_black-RH — GND2

J27 — L1_DIFF_5/4/5_80 Ohm+ / L1_DIFF_5/4/5_80 Ohm- — X_H1X4_black-RH — GND2

IN3

J4 — L3_DIFF_6.5/7/6.5_80 Ohm+ / L3_DIFF_6.5/7/6.5_80 Ohm- — X_H1X4_black-RH — GND2

J26 — L3_DIFF_5/4.5/5_85 Ohm+ / L3_DIFF_5/4.5/5_85 Ohm- — X_H1X4_black-RH — GND2

J12 — L3_DIFF_5/6/5_90 Ohm+ / L3_DIFF_5/6/5_90 Ohm- — X_H1X4_black-RH — GND2

IN4

J5 — L4_DIFF_5/4.5/5_85 Ohm+ / L4_DIFF_5/4.5/5_85 Ohm- — X_H1X4_black-RH — GND5

J6 — L4_DIFF_5/6/5_90 Ohm+ / L4_DIFF_5/6/5_90 Ohm- — X_H1X4_black-RH — GND5

J7 — L4_DIFF_5/4/5_80 Ohm+ / L4_DIFF_5/4/5_80 Ohm- — X_H1X4_black-RH — GND5

J15 — L6_DIFF_6/9/6_80 Ohm+ / L6_DIFF_6/9/6_80 Ohm- — X_H1X4_black-RH — GND5

J16 — L6_DIFF_4.5/4.5/4.5_85 Ohm+ / L6_DIFF_4.5/4.5/4.5_85 Ohm- — X_H1X4_black-RH — GND5

J17 — L6_DIFF_4.5/6/4.5_90 Ohm+ / L6_DIFF_4.5/6/4.5_90 Ohm- — X_H1X4_black-RH — GND5

J24 — L6_DIFF_4.5/12/4.5_100 Ohm+ / L6_DIFF_4.5/12/4.5_100 Ohm- — X_H1X4_black-RH — GND5

J18 — L6_DIFF_5/4/5_80 Ohm+ / L6_DIFF_5/4/5_80 Ohm- — X_H1X4_black-RH — GND5

Title	Impedance	
Size: Custom	Document Number: MS-175A1	Rev: 11
Date: Monday, January 06, 2014	Sheet 50 of 59	

60PIN BTB I/O Connector(VGA, LAN, USB)

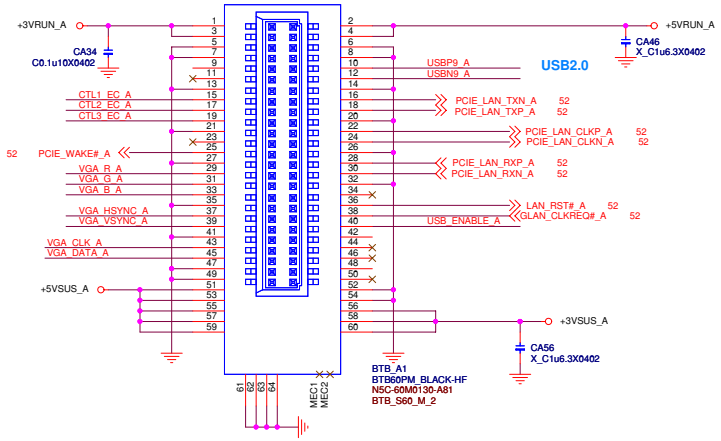

USB2.0 (I-Pad Charger Function)

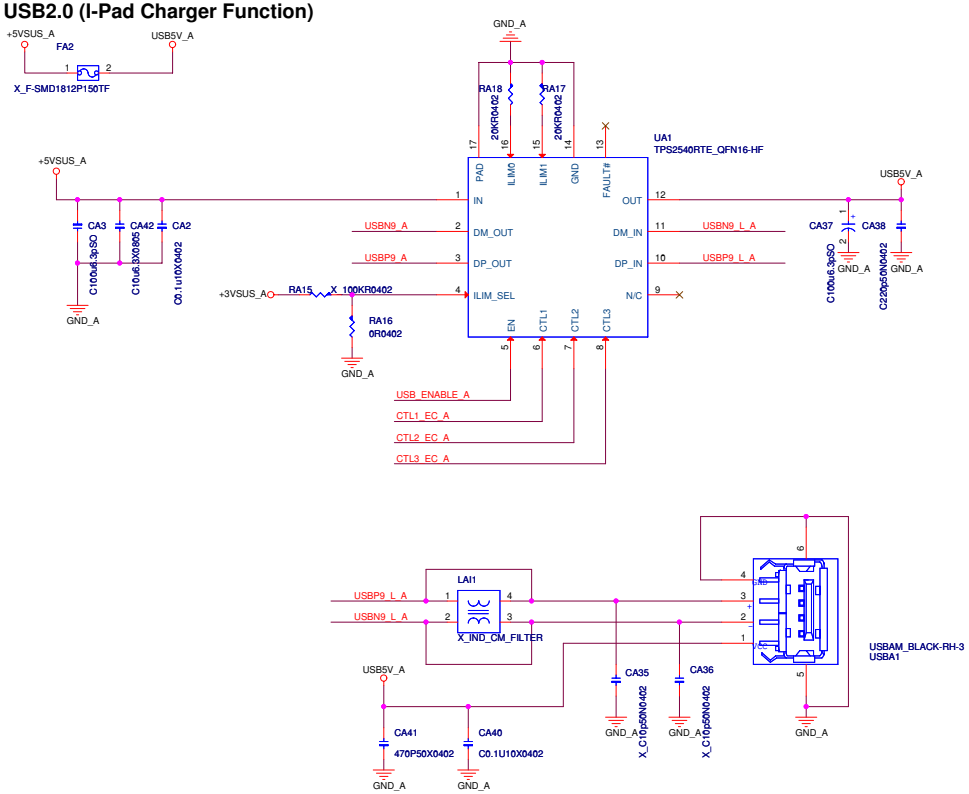

CRT

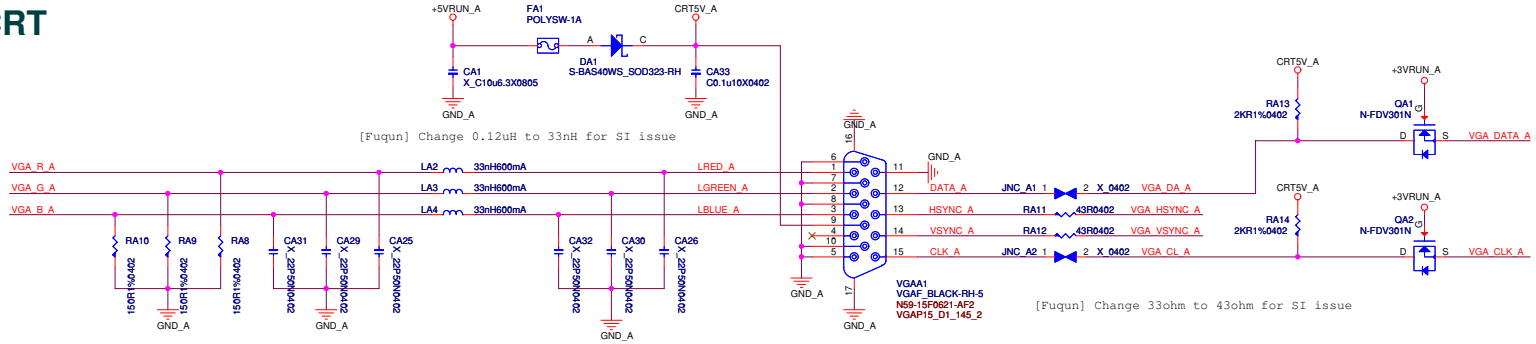

Title	[A] CRT/USB/BT		
Size: Custom	Document Number: MS-175AA		Rev: 11
Date: Tuesday, January 07, 2014	Sheet 51 of 59		

GIGA LAN(BFN2205B)

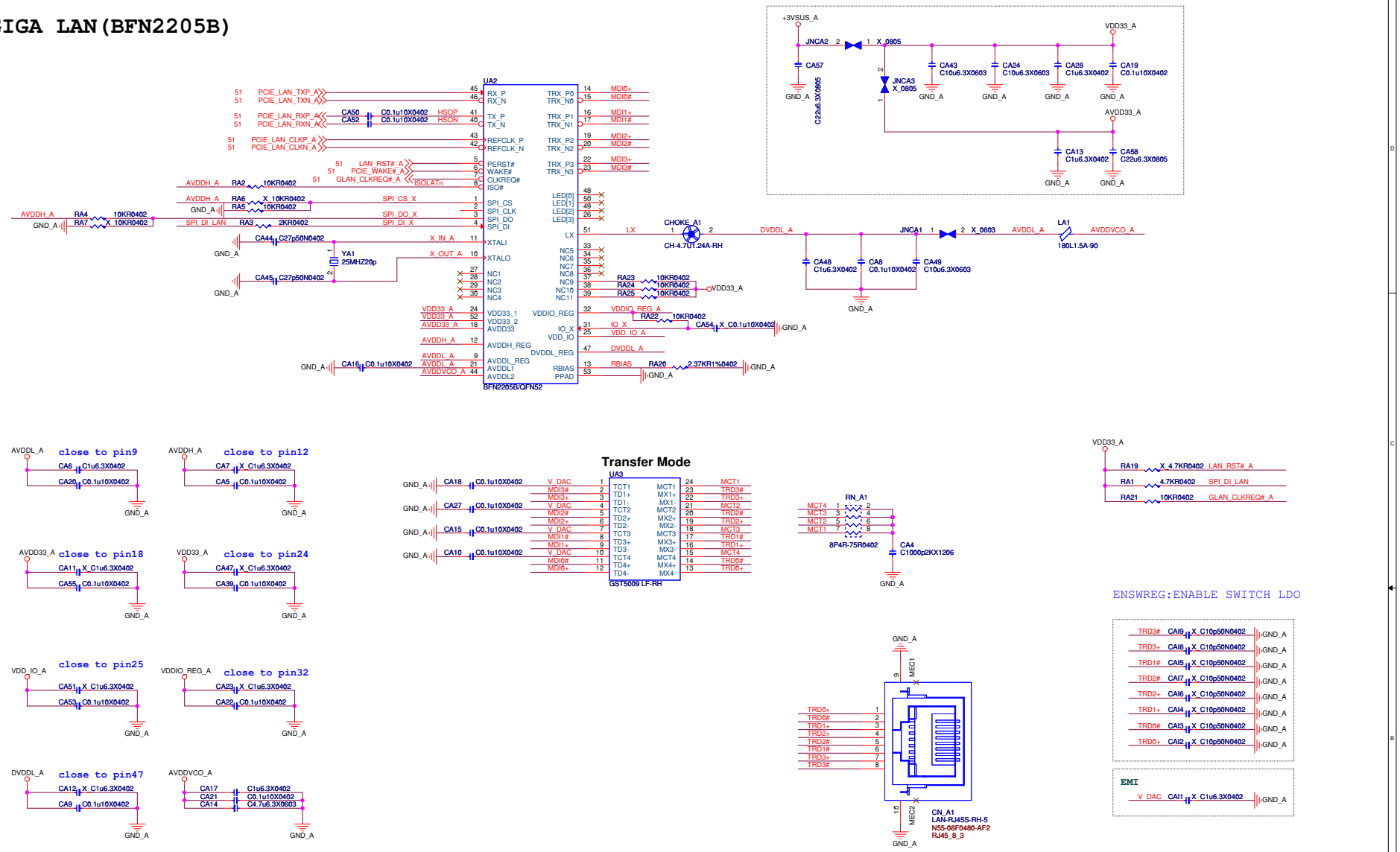

BTB STANDOFF

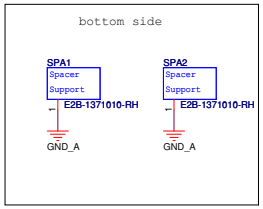

SCREW HOLE

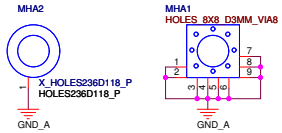

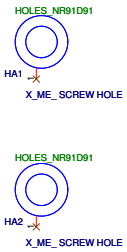

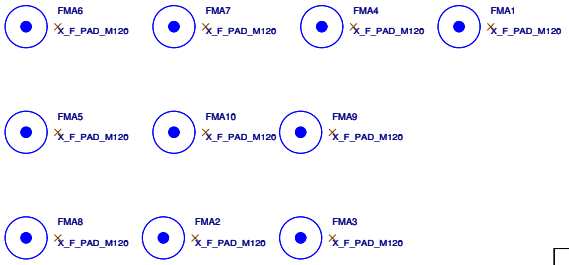

Title	[A] GIGA LAN(BFN2200B)		
Size: Custom	Document Number: MS-175AA		Rev: 11
Date: Monday, January 06, 2014	Sheet 52 of 59		

(才凹 board to board CONN1: HDMI,Audio, LED,LID)

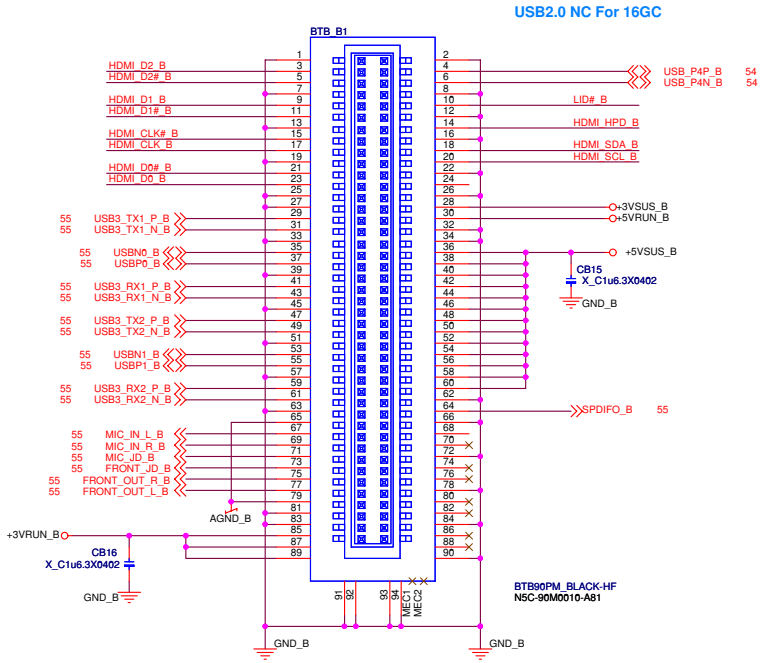

Hall Switch

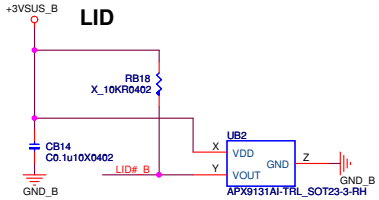

HDMI

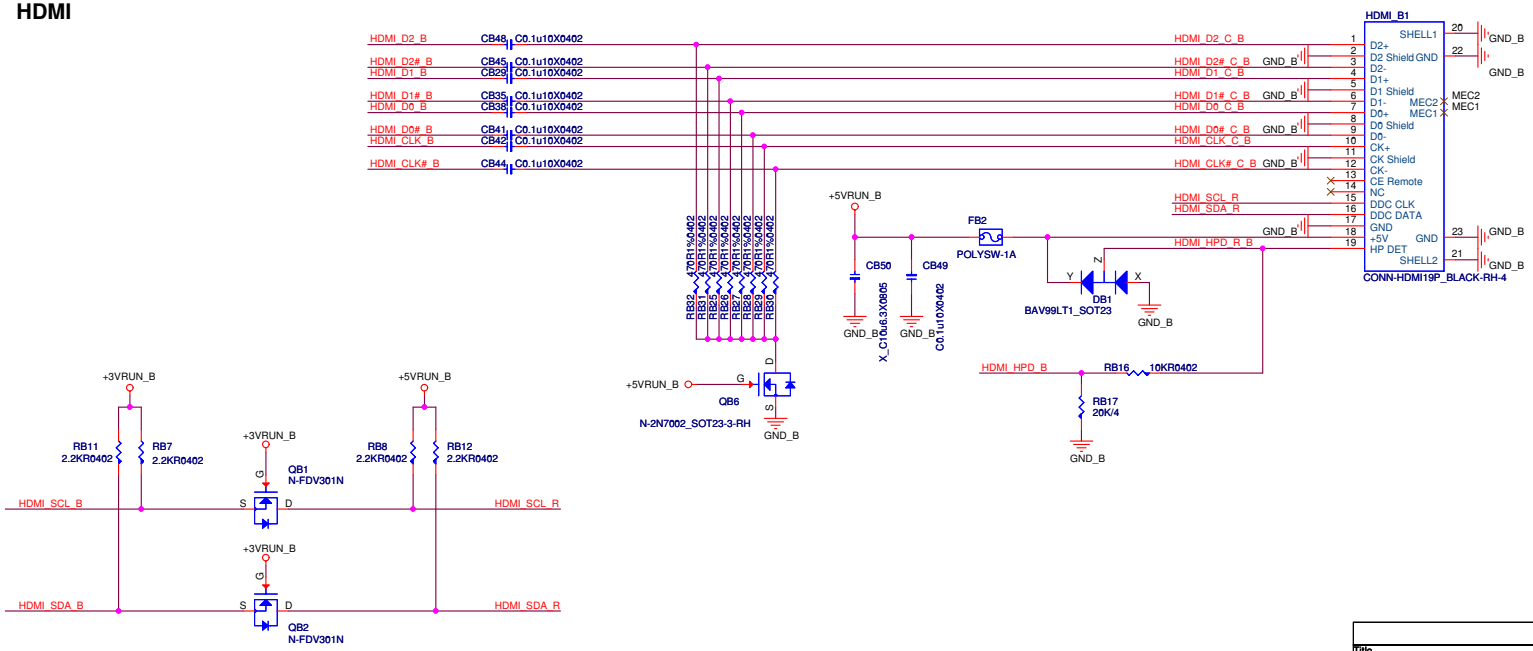

Title	[B] BTB CONN / HDMI		
Size Custom	Document Number MS-175AB		Rev 11
Date: Monday, January 06, 2014	Sheet 53 of 59		

USB2.0

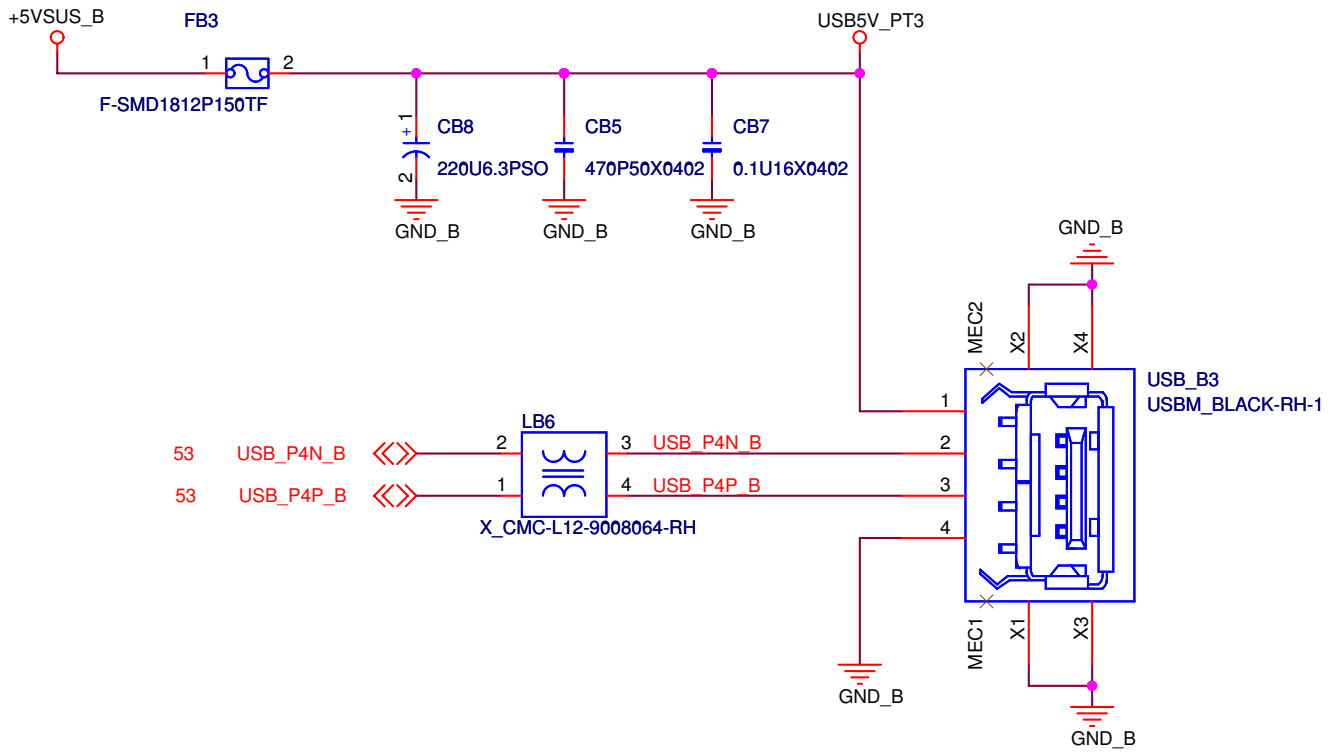

Title	[B] USB2.0	
Size Custom	Document Number MS-175AB	Rev 11
Date: Monday, January 06, 2014	Sheet 54 of 59	

USB 3.0 CNT1

(USB3.0 Left Side - UP)

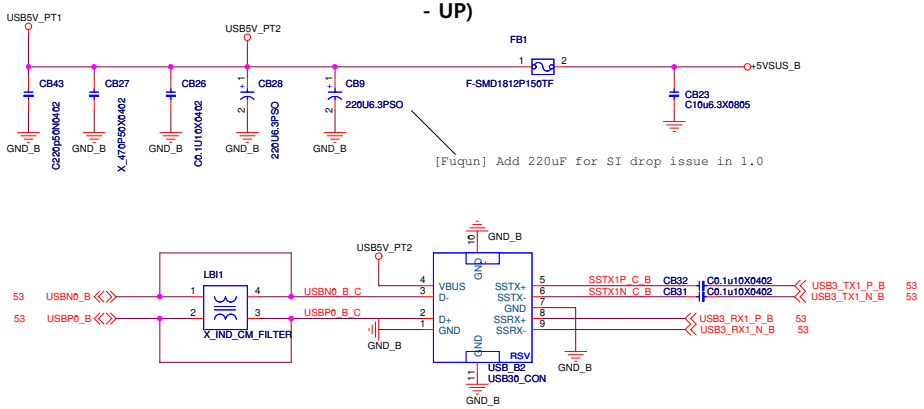

USB 3.0 CNT2

(USB3.0 Left Side - Down)

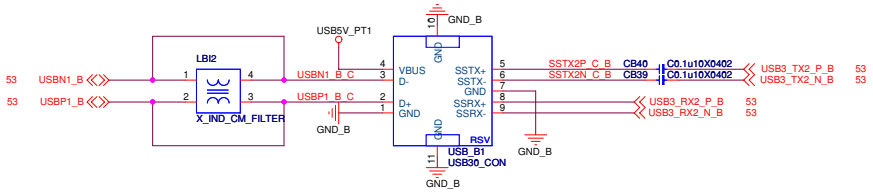

[Fuqun] ME change WLAN connect P/N from N54-06F1021-K06 to N54-06F1191-H06

Audio Jack

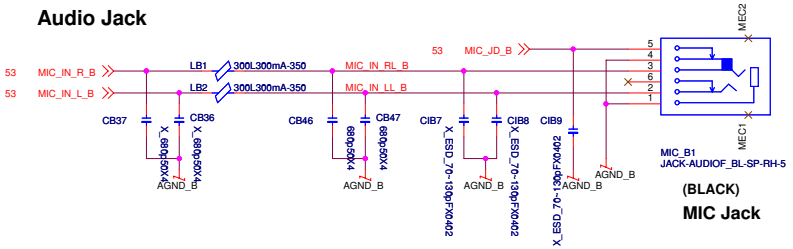

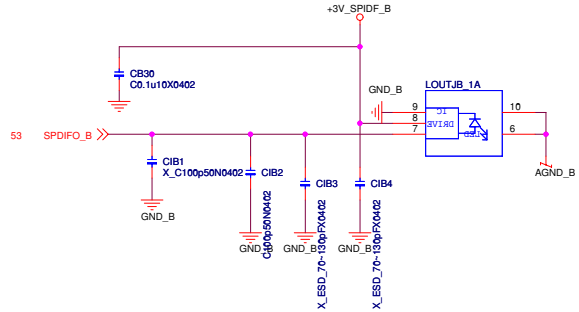

[Fuqun] ME change WLAN connect P/N from N58-10F0061-K06 to N58-10F0071-H06

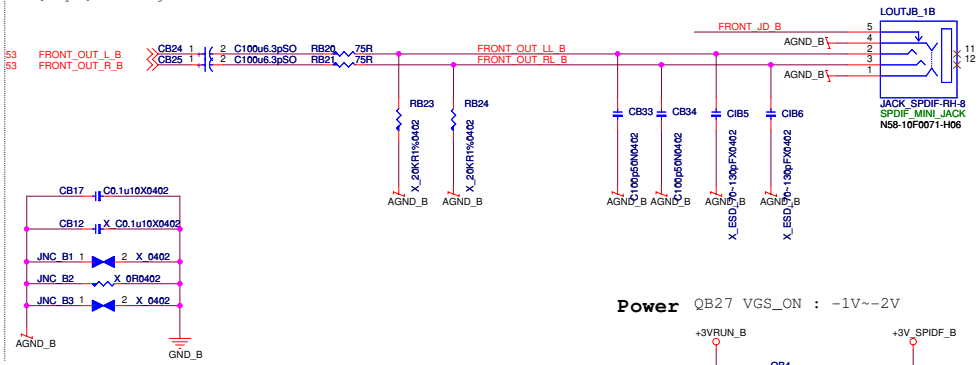

Power

QB27 VGS_ON : -1V~-2V

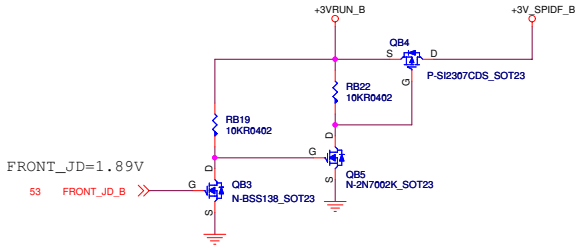

SCREW HOLE

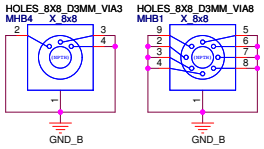

BTB STANDOFF

Top side

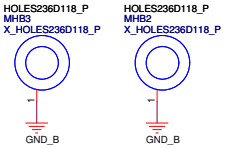

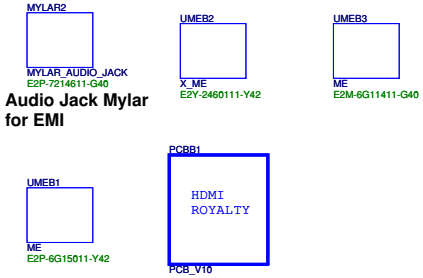

Title	[B] USB3.0/ Audio	
Size: Custom	Document Number: MS-175AB	Rev: 11
Date: Friday, January 10, 2014	Sheet 55 of 59	

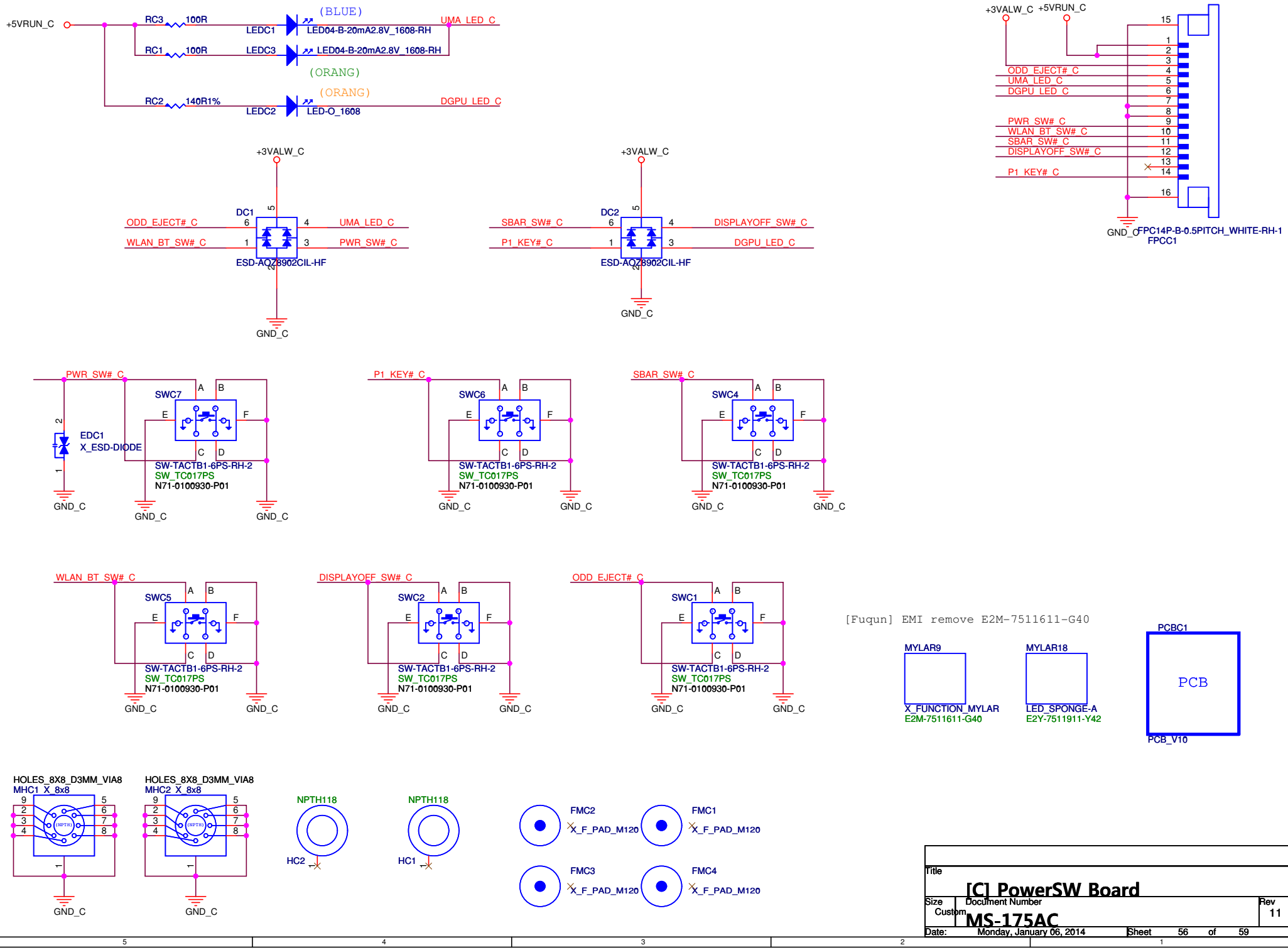
+5VRUN_C
RC3 100R
LEDC1
(BLUE)
LED04-B-20mA2.8V_1608-RH
UMA_LED_C
RC1 100R
LEDC3
LED04-B-20mA2.8V_1608-RH
(ORANG)
RC2 140R1%
LEDC2
(ORANG)
LED-O_1608
DGPU_LED_C
+3VALW_C
+5VRUN_C
ODD_EJECT# C
UMA_LED_C
DGPU_LED_C
PWR_SW# C
WLAN_BT_SW# C
SBAR_SW# C
DISPLAYOFF_SW# C
P1_KEY# C
GND_C
FPC14P-B-0.5PITCH_WHITE-RH-1
FPCC1
+3VALW_C
DC1
ODD_EJECT# C
UMA_LED_C
WLAN_BT_SW# C
PWR_SW# C
ESD-AQZ8902CIL-HF
GND_C
+3VALW_C
DC2
SBAR_SW# C
DISPLAYOFF_SW# C
P1_KEY# C
DGPU_LED_C
ESD-AQZ8902CIL-HF
GND_C
PWR_SW# C
SWC7
EDC1
X_ESD-DIODE
SW-TACTB1-6PS-RH-2
SW_TC017PS
N71-0100930-P01
GND_C
P1_KEY# C
SWC6
SW-TACTB1-6PS-RH-2
SW_TC017PS
N71-0100930-P01
GND_C
SBAR_SW# C
SWC4
SW-TACTB1-6PS-RH-2
SW_TC017PS
N71-0100930-P01
GND_C
WLAN_BT_SW# C
SWC5
SW-TACTB1-6PS-RH-2
SW_TC017PS
N71-0100930-P01
GND_C
DISPLAYOFF_SW# C
SWC2
SW-TACTB1-6PS-RH-2
SW_TC017PS
N71-0100930-P01
GND_C
ODD_EJECT# C
SWC1
SW-TACTB1-6PS-RH-2
SW_TC017PS
N71-0100930-P01
GND_C
[Fuqun] EMI remove E2M-7511611-G40
MYLAR9
X_FUNCTION_MYLAR
E2M-7511611-G40
MYLAR18
LED_SPONGE-A
E2Y-7511911-Y42
PCBC1
PCB
PCB_V10
HOLES_8X8_D3MM_VIA8
MHC1 X_8x8
HOLES_8X8_D3MM_VIA8
MHC2 X_8x8
GND_C
NPTH118
HC2
NPTH118
HC1
FMC2
X_F_PAD_M120
FMC1
X_F_PAD_M120
FMC3
X_F_PAD_M120
FMC4
X_F_PAD_M120
Title
[C] PowerSW Board
Size
Custom
Document Number
MS-175AC
Rev
11
Date: Monday, January 06, 2014
Sheet 56 of 59

1757 Power Delivery Chart

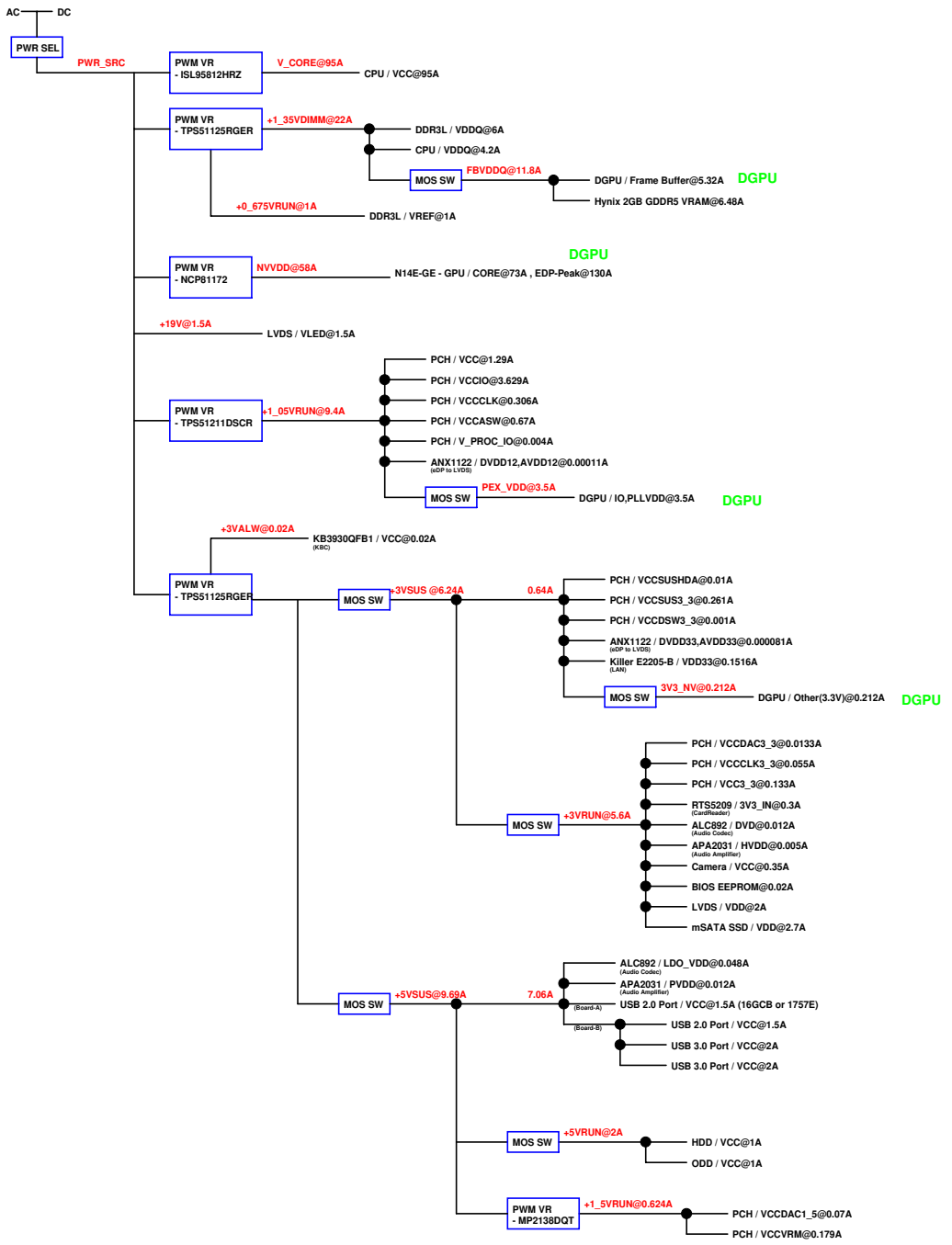

Title	Power Delivery Chart	
Size	Document Number	Rev
Custom	MS-1757	1.0
Date: Monday, January 06, 2014	Sheet 37 of 38	

1757 Power on Block Diagram

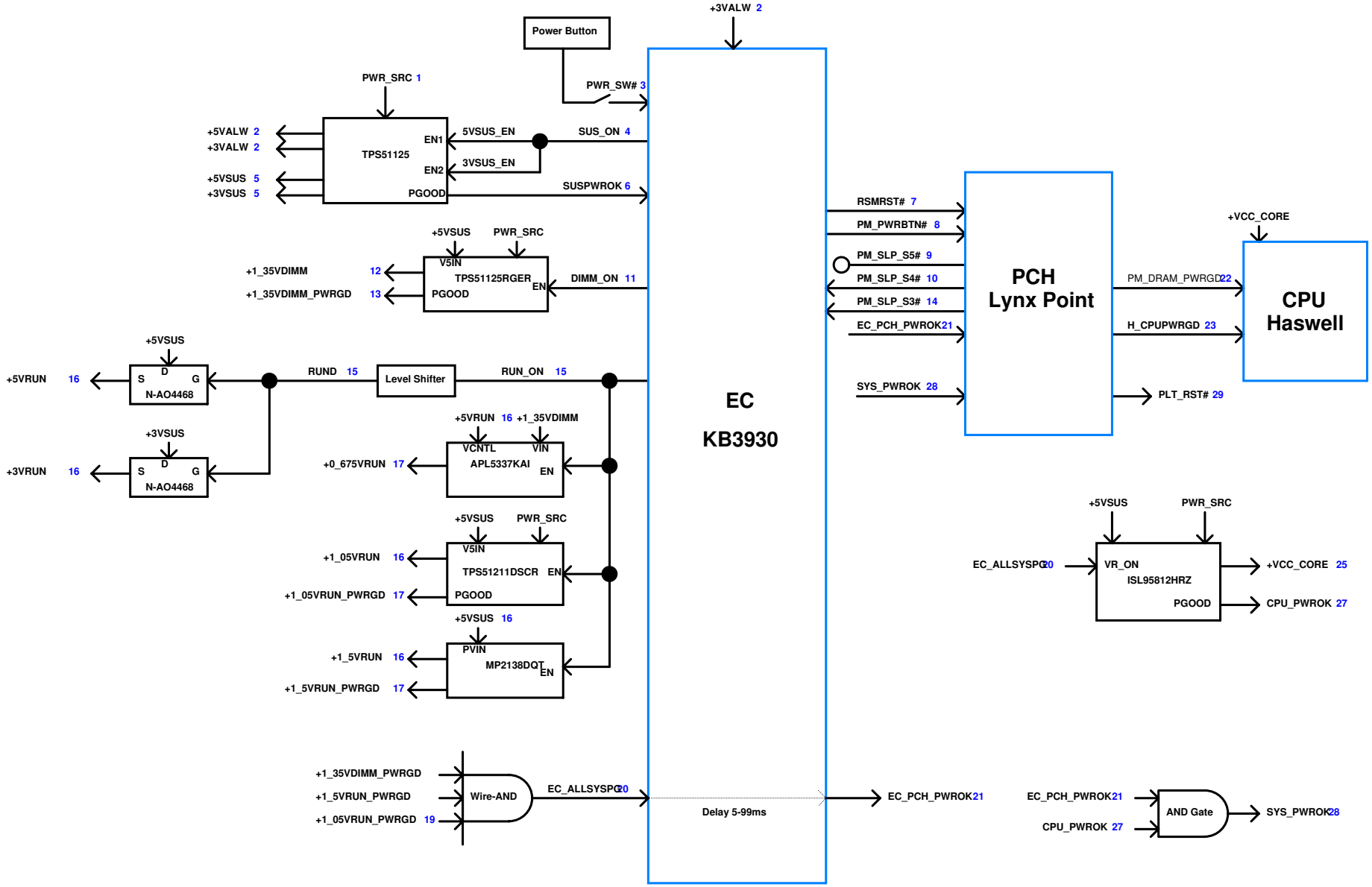

Title	Power on Block Diagram		
Size: Custom	Document Number: MS-1757		Rev: 11
Date: Monday, January 06, 2014	Sheet 58 of 59		

Power on Sequence

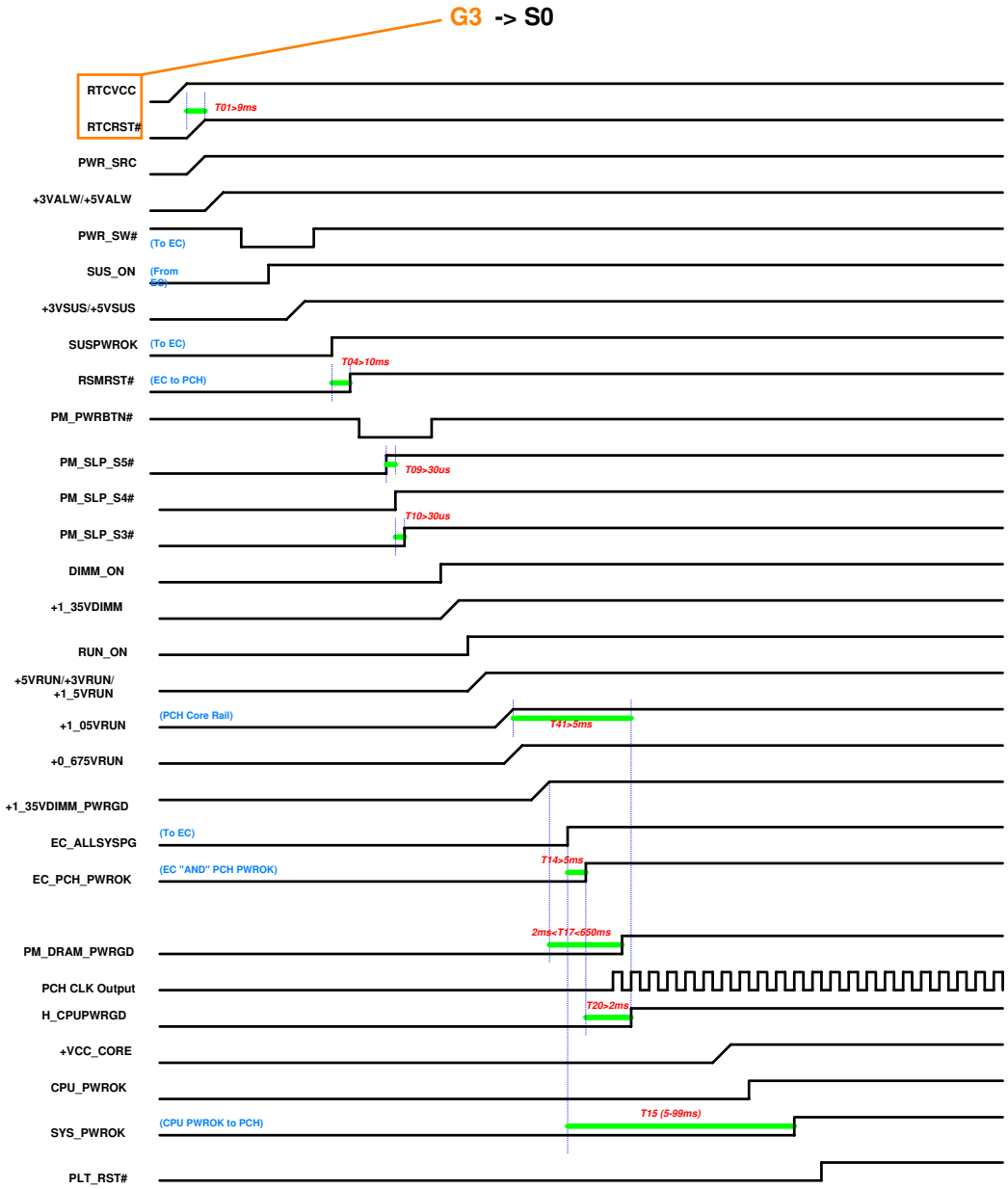

Title	Power on Sequence		
Size Custom	Document Number MS-1757		Rev 11
Date: Monday, January 06, 2014	Sheet 59 of 59		