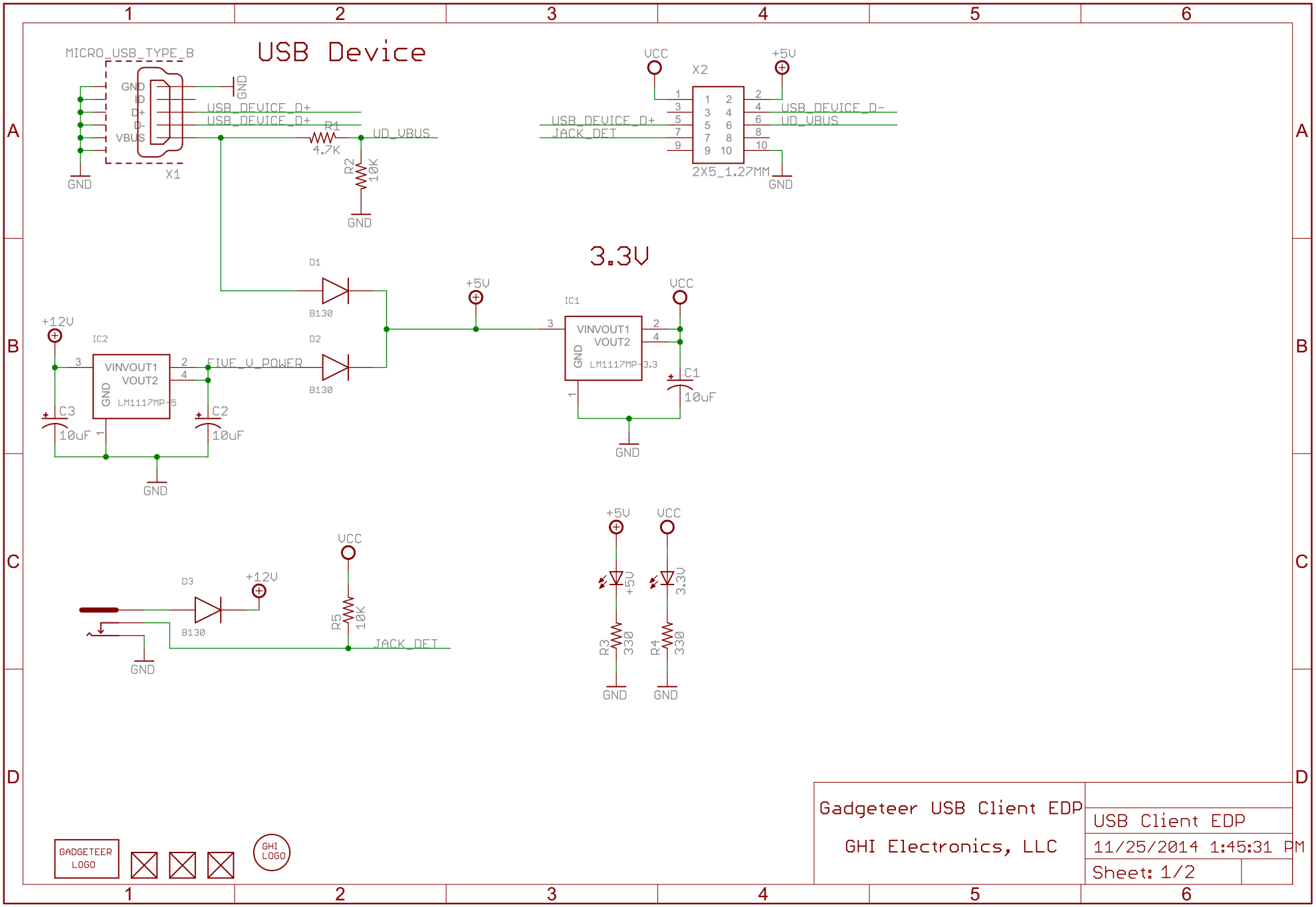
USB Device
MICRO_USB_TYPE_B
GND
ID
D+
D-
VBUS
X1
USB_DEVICE_D+
USB_DEVICE_D+
R1
4.7K
UD_VBUS
R2
10K
X2
VCC
+5V
USB_DEVICE_D+
JACK_DET
USB_DEVICE_D-
UD_VBUS
2X5_1.27MM
3.3V
D1
B130
D2
B130
+12V
IC2
VINVOUT1
VOUT2
LM1117MP-5
FIVE_V_POWER
C3
10uF
C2
10uF
IC1
LM1117MP-3.3
C1
10uF
D3
B130
R5
10K
JACK_DET
R3
330
R4
330
GADGETEER LOGO
GHI LOGO
Gadgeteer USB Client EDP
GHI Electronics, LLC
USB Client EDP
11/25/2014 1:45:31 PM
Sheet: 1/2