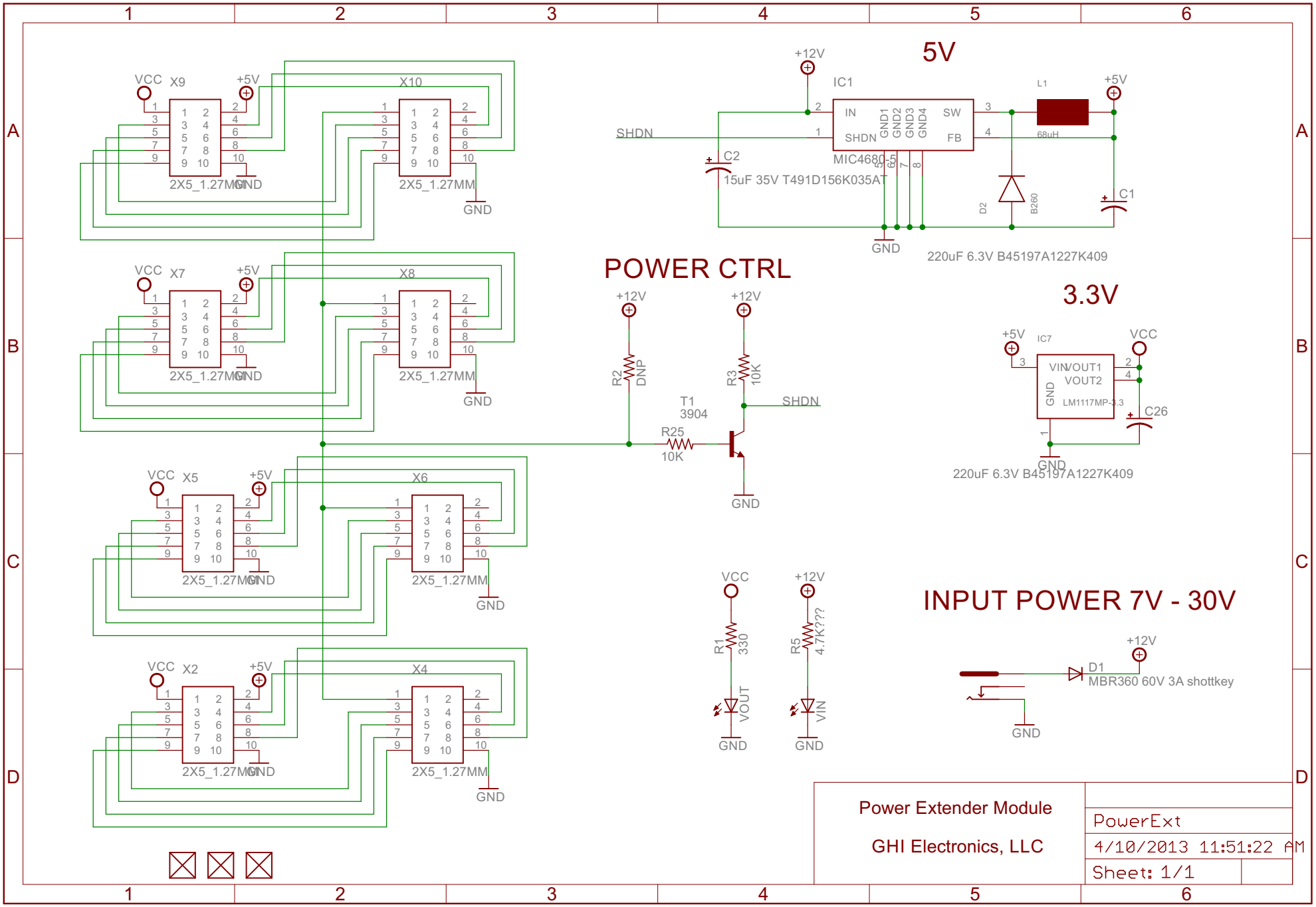
5V
+12V
IC1
IN
SHDN
GND1
GND2
GND3
GND4
SW
FB
MIC4680-5
L1
68uH
+5V
SHDN
C2
15uF 35V T491D156K035AT
D2
B260
C1
220uF 6.3V B45197A1227K409
GND
POWER CTRL
+12V
R2
DNP
R3
10K
T1
3904
SHDN
R25
10K
GND
3.3V
+5V
IC7
VIN
VOUT1
VOUT2
GND
LM1117MP-3.3
VCC
C26
220uF 6.3V B45197A1227K409
INPUT POWER 7V - 30V
+12V
D1
MBR360 60V 3A shottkey
GND
VCC
R1
330
VOUT
GND
+12V
R5
4.7K???
VIN
GND
VCC
X9
+5V
X10
2X5_1.27MM
GND
VCC
X7
+5V
X8
2X5_1.27MM
GND
VCC
X5
+5V
X6
2X5_1.27MM
GND
VCC
X2
+5V
X4
2X5_1.27MM
GND
Power Extender Module
GHI Electronics, LLC
PowerExt
4/10/2013 11:51:22 AM
Sheet: 1/1