ORDER NO. SD7910 – 1630

Service Manual

Direct Drive Automatic Turntable System

SL-1600MK2

(M), (MC)

- The model SL-1600MK2 (M) is available in U.S.A. only.
- The model SL-1600MK2 (MC) is available in Canada only.

TECHNICAL SPECIFICATIONS

(Specifications are subject to change without notice.)
(Weighs and dimensions shown are approximate.)

General

Power supply:	120V, 50 or 60Hz
Power consumption:	18.5W
Dimensions: (W x H x D)	45.3 x 14.9 x 39.9 cm (17-27/32"x5-7/8"x15-45/64")
Weight:	10 kg (22 lb.)

Turntable section

Type:	Quartz direct drive Automatic turntable (Auto start, Auto return, Auto stop, Repeat play)
Drive method:	Direct drive
Motor:	Brushless DC motor
Turntable platter:	Aluminum diecast Diameter 33.2 cm (13-5/64 inches) Weight 2 kg (4.4 lb.)
Turntable speeds:	33-1/3 rpm and 45 rpm
Pitch control:	±6% range
Starting torque:	1.5 kg·cm (1.3 lb·in)
Build-up characteristics:	0.7 s. (90° rotation) to 33-1/3 rpm
Braking system:	Electronic brake
Speed change due to load torque:	0% within 1.0 kg·cm (0.87 lb·in)
Wow and flutter:	0.01% WRMS (*) 0.025% WRMS (JIS C5521) ±0.035% peak (IEC98A Weighted)
Rumble:	–56 dB (IEC 98A Unweighted) –78 dB (IEC 98A Weighted)

* This rating refers to turntable assembly alone, excluding effects of record, cartridge or tonearm, but including platter. Measured by obtaining signal from built-in frequency generator of motor assembly.

Tone arm section

Type:	Universal
Effective length:	230 mm (9-1/16")
Arm height adjustment range:	0 – 6 mm
Overhang:	15 mm (19/32")
Effective mass:	12 g (without cartridge)
Tracking error angle:	Within 2°32' at the outer groove of 30 cm (12") record Within 0°32' at the inner groove of 30 cm (12") record
Offset angle:	22°
Friction:	Less than 7 mg (lateral, vertical)
Stylus pressure adjustment range:	0–2.5 g
Applicable cartridge weight range:	6–10 g 13.5–17.5 g (including headshell)
(with auxiliary weight):	9.5–13 g 17–20.5g (including headshell)
(with shell weight):	3.5–6.5 g 11–14 g (including headsell)
Headshell weight:	7.5 g

Technics

Panasonic Company
Division of Matsushita Electric Corporation of America
One Panasonic Way, Secaucus, New Jersey 07094

Panasonic Hawaii, Inc.
320 Waiakamilo Road, Honolulu, Hawaii 96817

Matsushita Electric of Canada Ltd.
5770 Ambler Drive, Mississauga, Ontario L4W 2T3

www.vinylengine.com

■ CONTENTS

LOCATION OF CONTROLS 2
LOCATION OF CONTROLS 3
DISASSEMBLY PROCEDURE . . . . . 4 ~ 7
ADJUSTMENTS (Electrical) 7
ADJUSTMENTS (Tone arm) 8
FEATURE 9
TECHNICAL GUIDE . . . . . 10 ~ 13
TROUBLE SHOOTING GUIDE . . . . . 14 ~ 15
ADJUSTMENT FOR AUTOMATIC RETURN POSITION 15
TIMING CHART OF TONE ARM DRIVE CONTROL 16
MN1400PA 17
BLOCK DIAGRAM (Peiphery micro computer) 18
BLOCK DIAGRAM 19
REPLACEMENT PARTS LIST (Electrical Parts) . . . . . 20 ~ 22
SCHEMATIC DIAGRAM (Drive Circuit Board) . . . . . 23 ~ 24
REFERENCE VOLTAGE AND WAVEFORM AT EACH IC . . . . . 25 ~ 26
TERMINAL GUIDE OF TRANSISTOR AND IC 26
CONTROL CIRCUIT BOARD . . . . . 27 ~ 28
DRIVE CIRCUIT BOARD . . . . . 27 ~ 28
SCHEMATIC DIAGRAM (Control Circuit Board) . . . . . 29 ~ 30
TONE ARM DRIVE CIRCUIT BOARD . . . . . 31 ~ 32
SCHEMATIC DIAGRAM (Tone Arm Drive Circuit Board) . 33 ~ 34
EXPLODED VIEW (Main Base) 35 ~ 36
REPLACEMENT PARTS LIST (Main Base and Bottom Base Parts) 37
EXPLODED VIEW (Bottom Base) . . . . . 38 ~ 39
EXPLODED VIEW (Tone Arm and Arm Base) . . . . . 40 ~ 41
REPLACEMENT PARTS LIST (Tone Arm and Arm Base Parts) 42

■ LOCATION OF CONTROLS

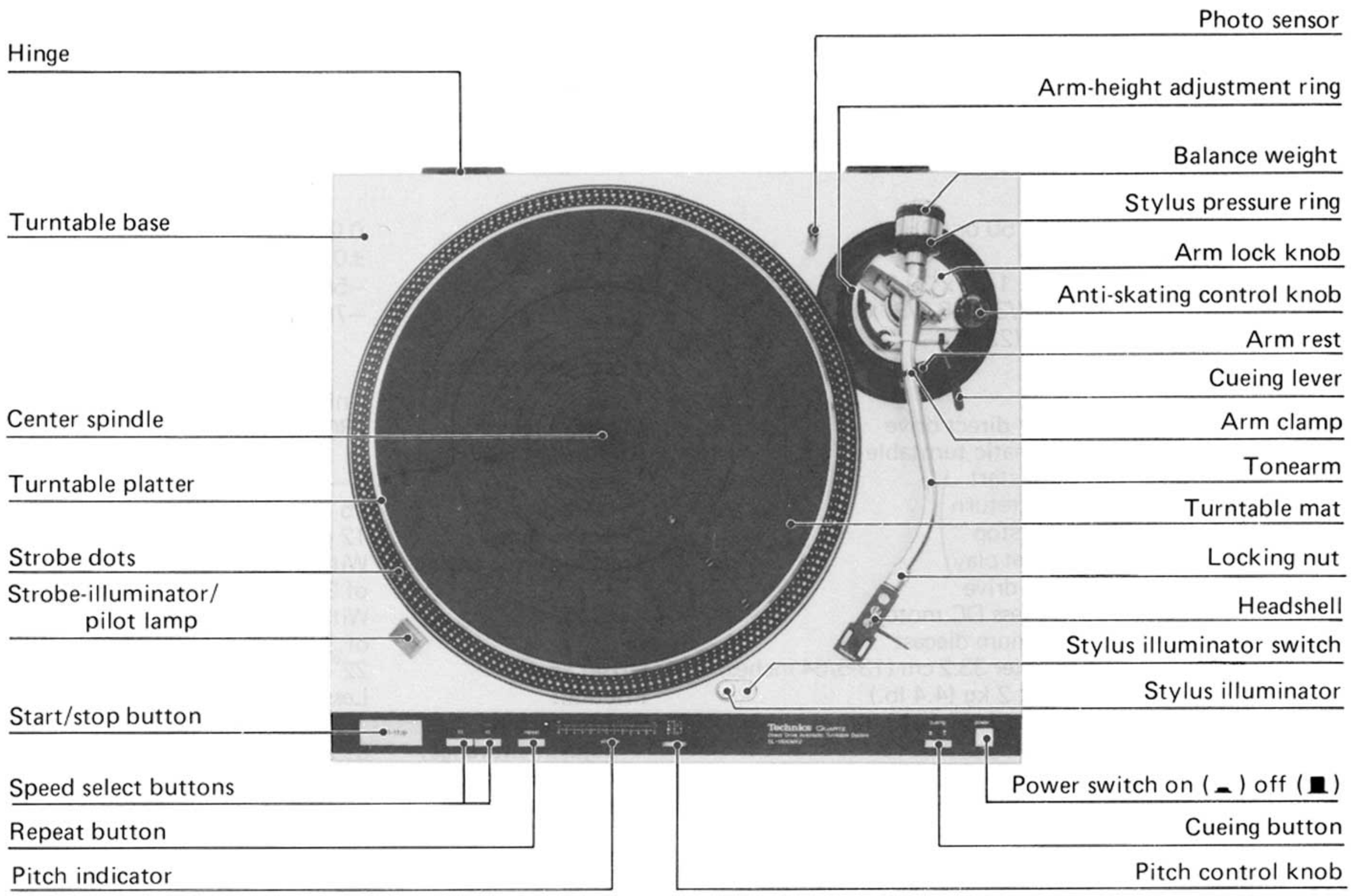

www.vinylengine.com

■ LOCATION OF CONTROLS

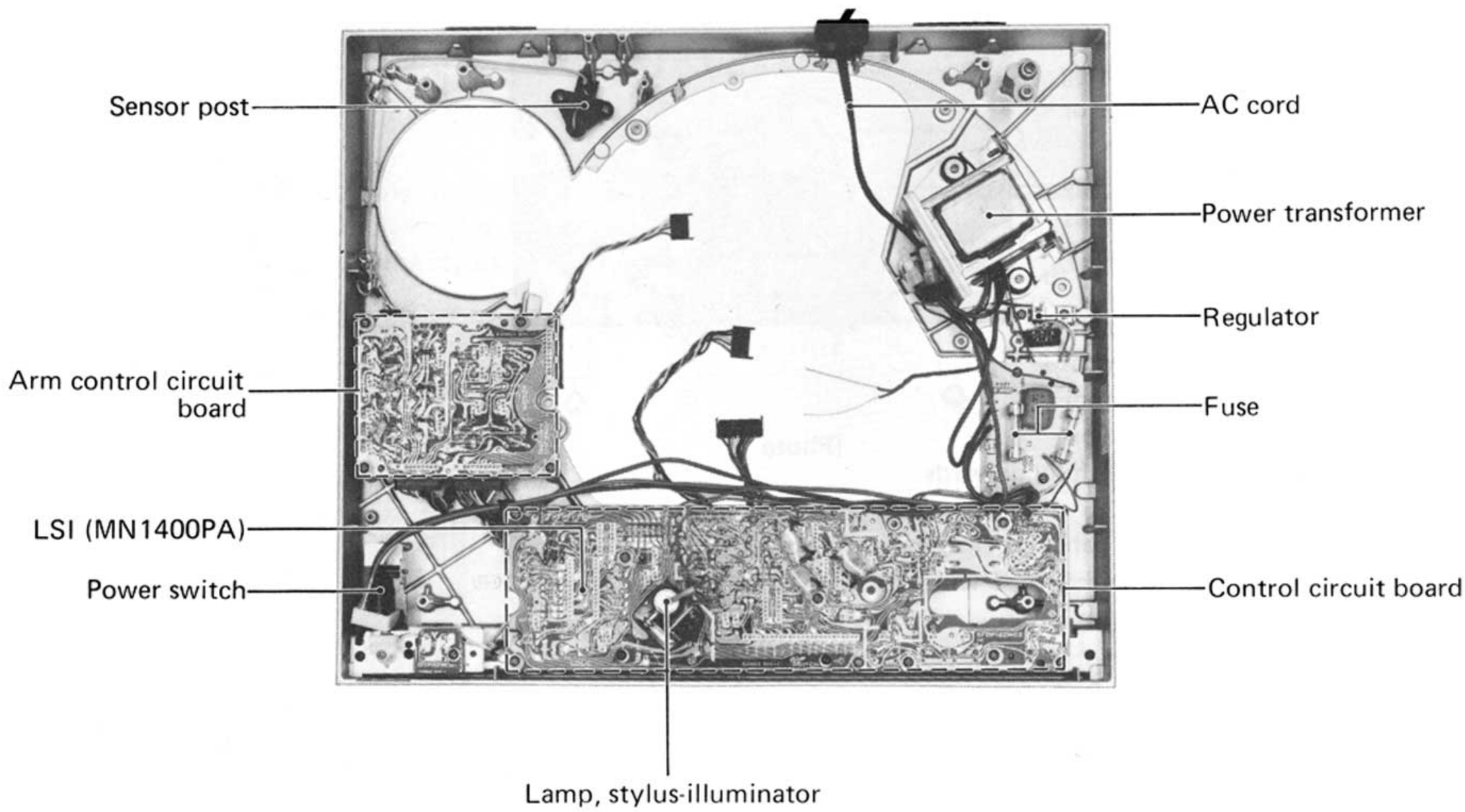

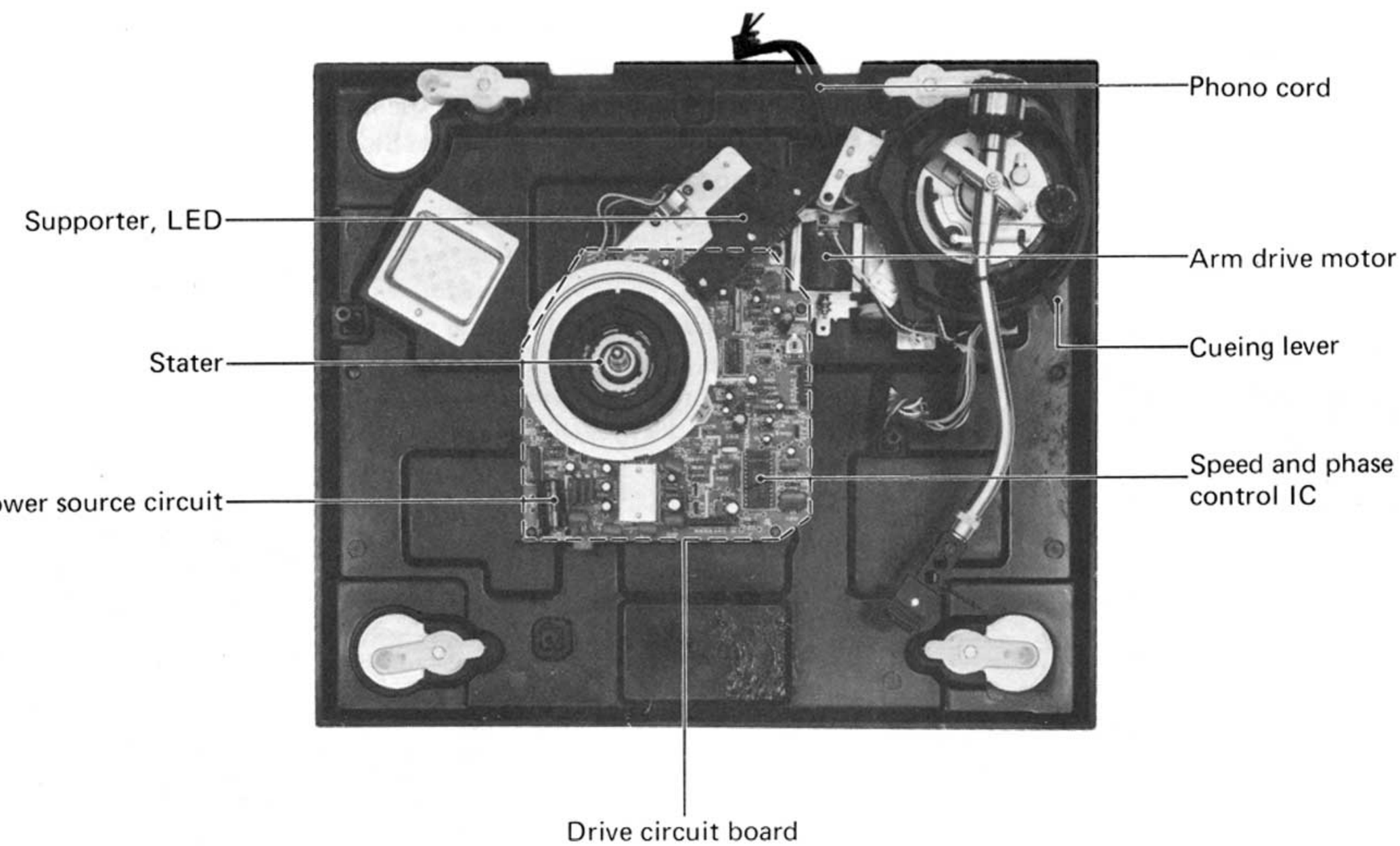

www.vinylengine.com

■ DISASSEMBLY PROCEDURE

How to remove main base ass'y and bottom base ass'y

1. Clamp tone arm to the arm rest.
2. Remove head shell and turn-table platter.
3. Close dust cover.
4. Turn unit upside down taking special care not to damage or scrach the dust cover.
5. Remove 6 screws Ⓐ of the audio insulator and 2 screws Ⓑ of the phono cord clamper as shown in Photo 1.
6. Holding the player firmly with both hands, to prevent separation of upper section (bottom base ass'y) from lower section (main base ass'y), turn it carefully upwards.
7. Remove dust cover.
8. Remove 5 screws Ⓒ of the panel cover as shown in Photo 2.
9. Remove 4 connectors Ⓓ and 2 read wires Ⓔ from power transformer as shown in Photo 3.
10. To move the main base ass'y from the bottom base ass'y, turn cueing lever upward and move tone arm towards center of spindle.
    The main base ass'y can be lifted up essily.

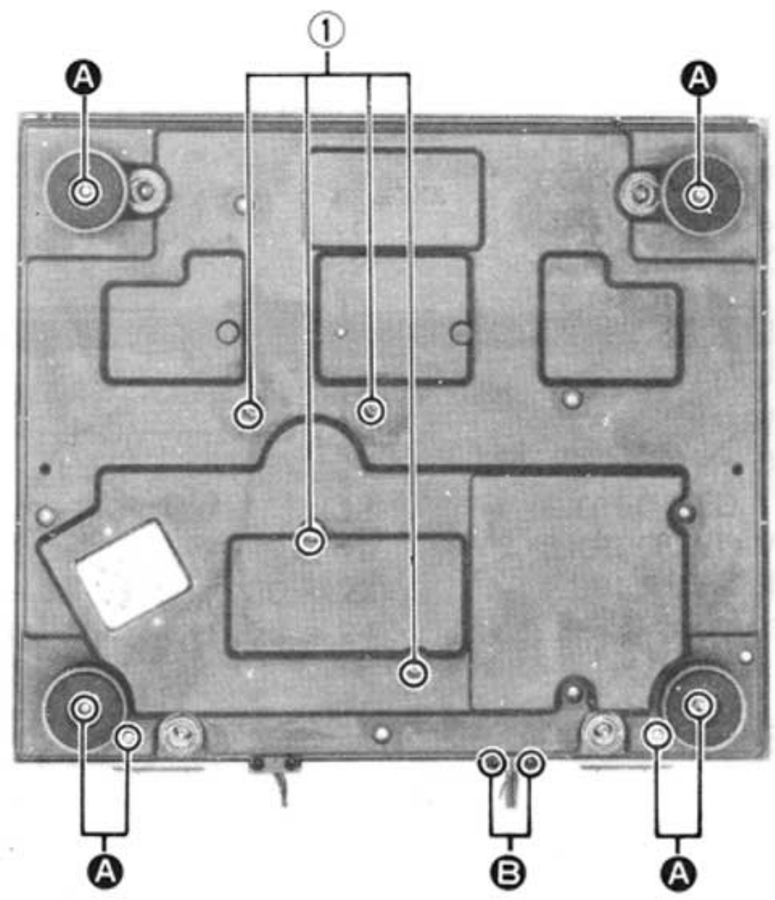

[Photo 1]

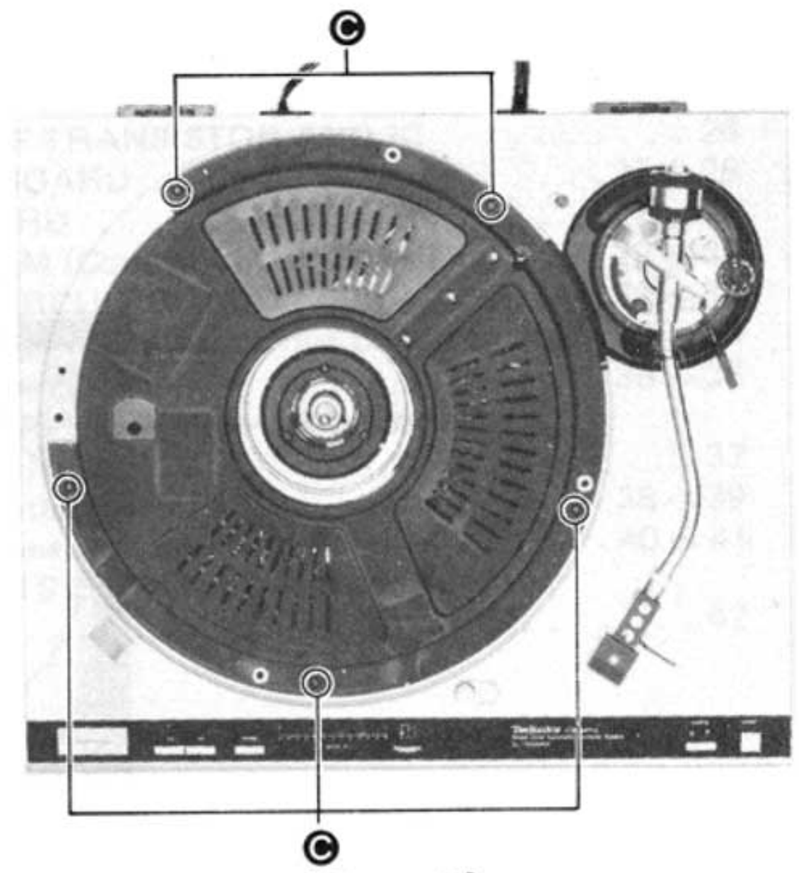

[Photo 2]

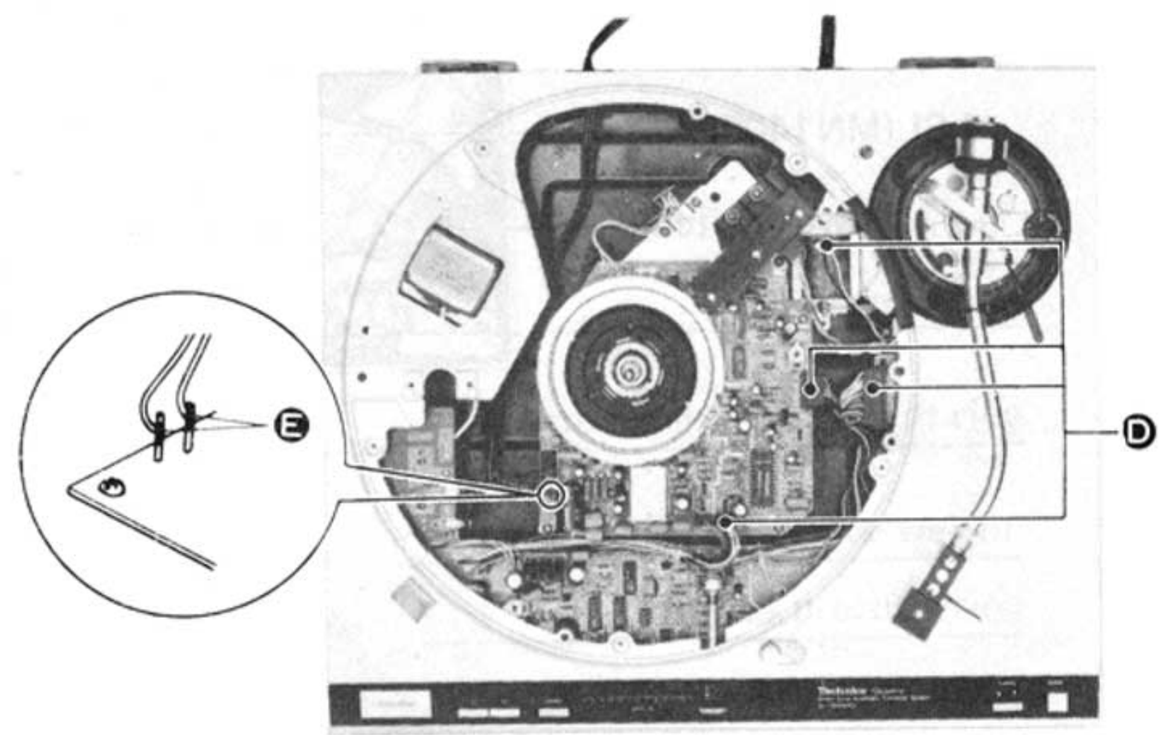

[Photo 3]

How to remove drive circuit p.c.b. and stater frame coil

1. Remove main base ass'y and bottom base ass'y.
2. Remove 3 screws Ⓕ of the drive circuit p.c.b. and 3 screws Ⓖ of the stater frame cover as shown in Photo 4.
3. Remove 2 screws Ⓗ of transistor and 2 screws Ⓘ of the LED case as shown in Photo 4.
4. Disconnect 18 soldered parts Ⓙ of the stater frame coil and 4 soldered parts Ⓙ of the F.G detector coil as shown in Fig. 2.
5. Remove 3 screws Ⓚ of the stater frame ass'y as shown if Fig. 1.

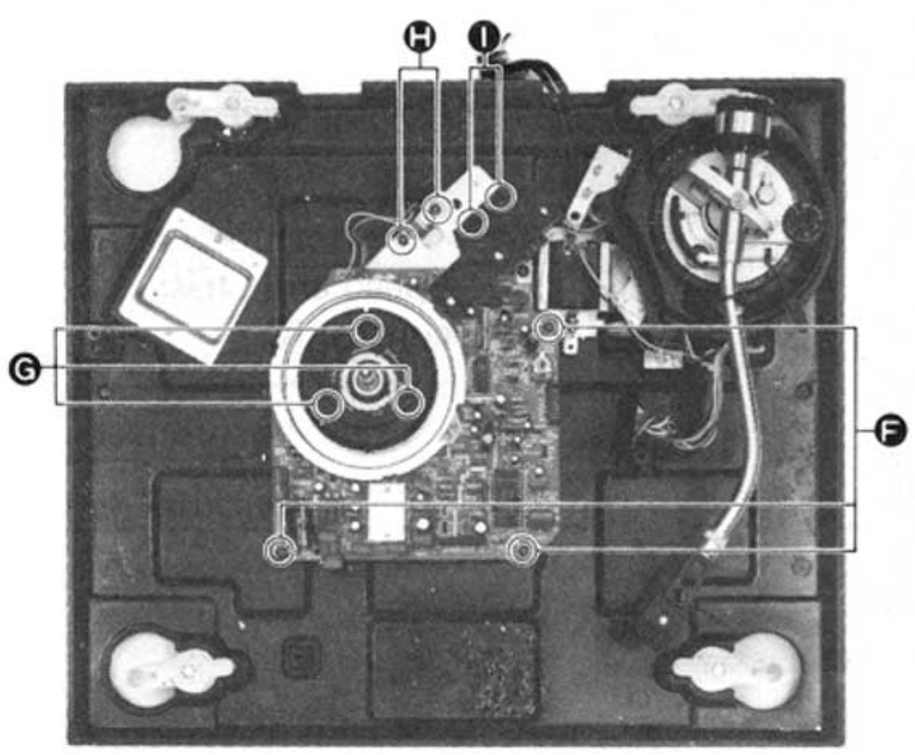

[Photo 4]

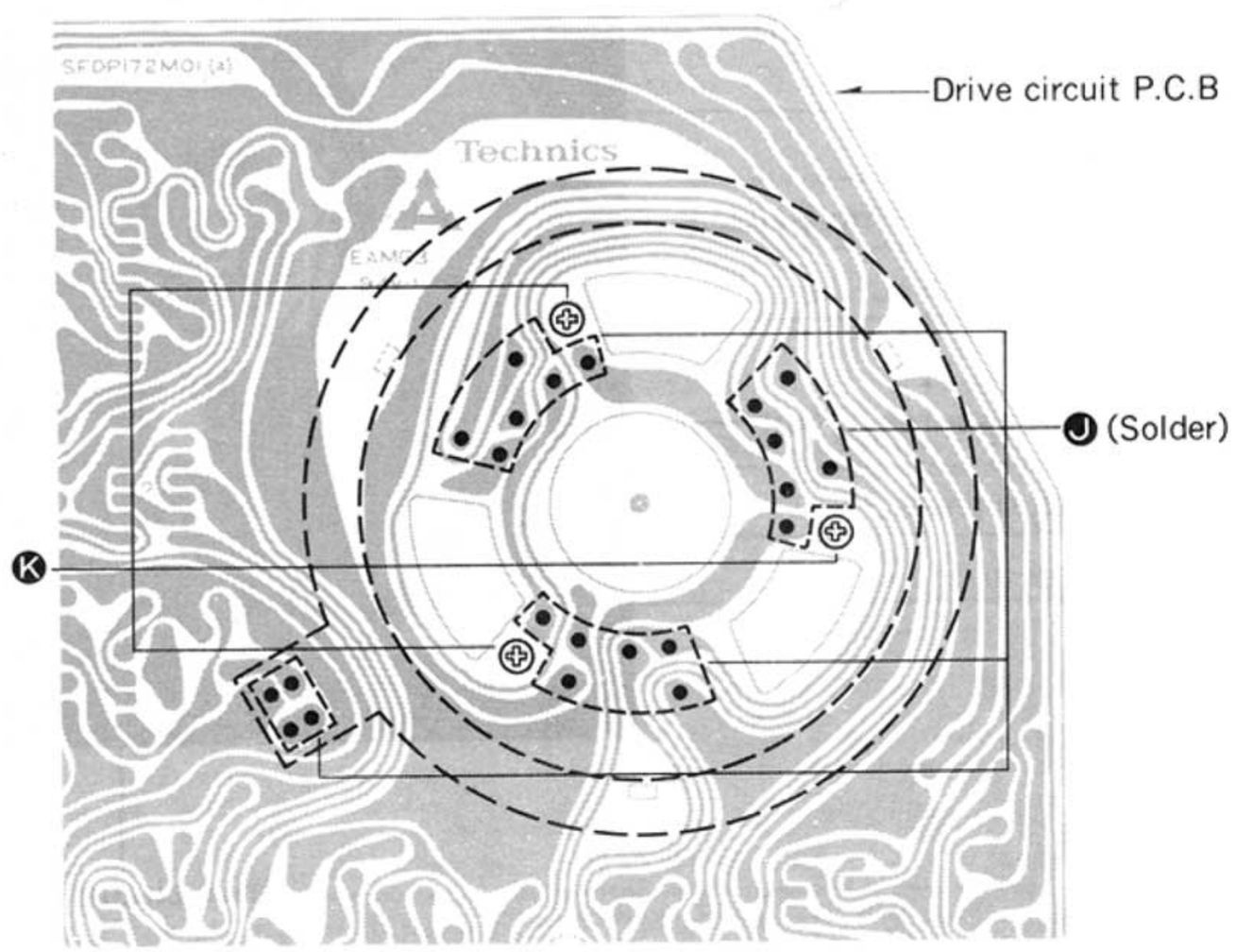

[Fig. 1]

www.vinylengine.com

How to remove control circuit p.c.b. and stylus-illuminator lamp

1. Remove main base ass'y and bottom base ass'y.
2. Remove 11 screws Ⓛ of the control circuit p.c.b. as shown in Fig. 2.
3. Remove 2 screws Ⓜ of the power switch bracket as shown in Fig. 2.
4. Set up the control circuit board as shown in Fig. 3. Then remove the 2 screws Ⓝ of the stylus illuminator mounting plate. (Fig. 3).
5. To replace the stylus illuminating lamp, remove the setscrew Ⓞ of the lamp case (Fig. 4) and detach the lamp case, then the stylus illuminating lamp can be replaced.

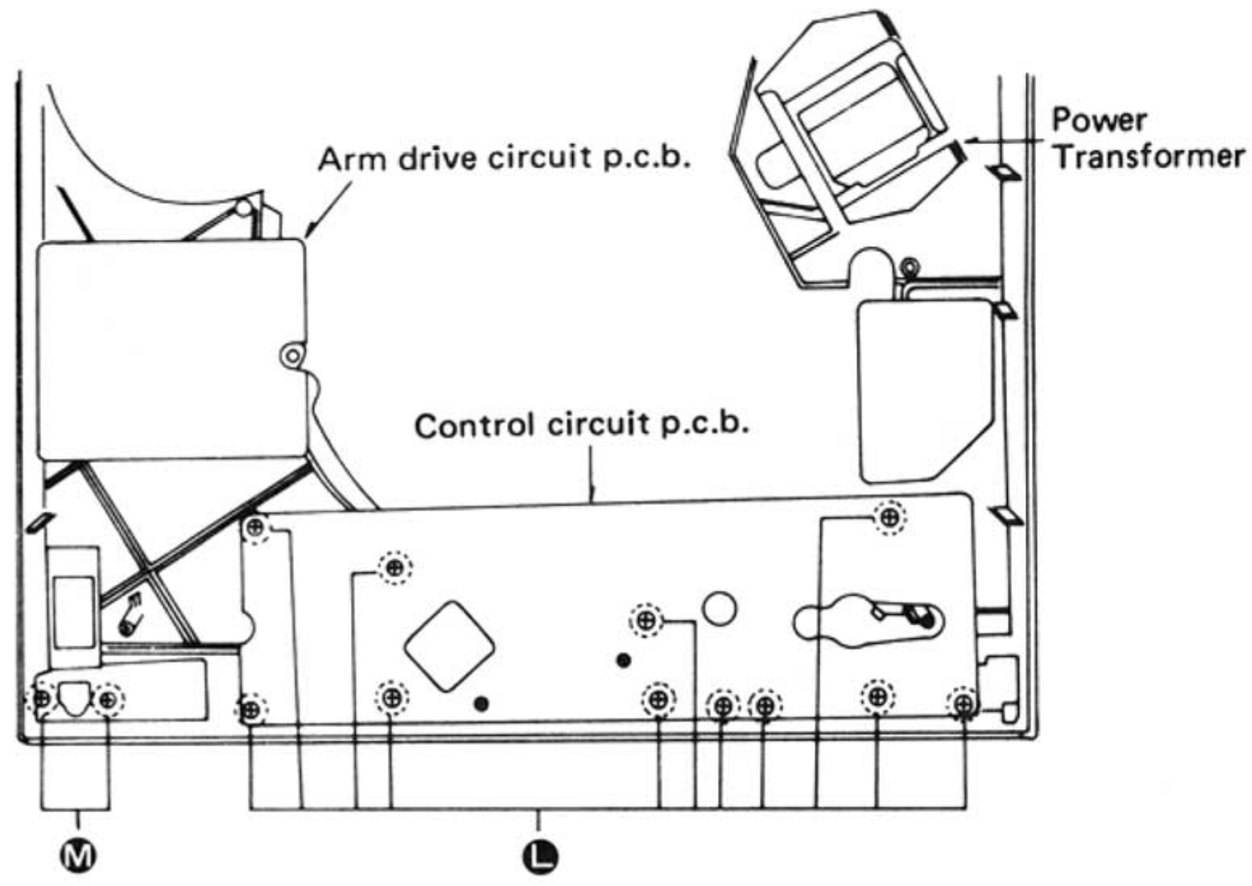

[Fig. 2]

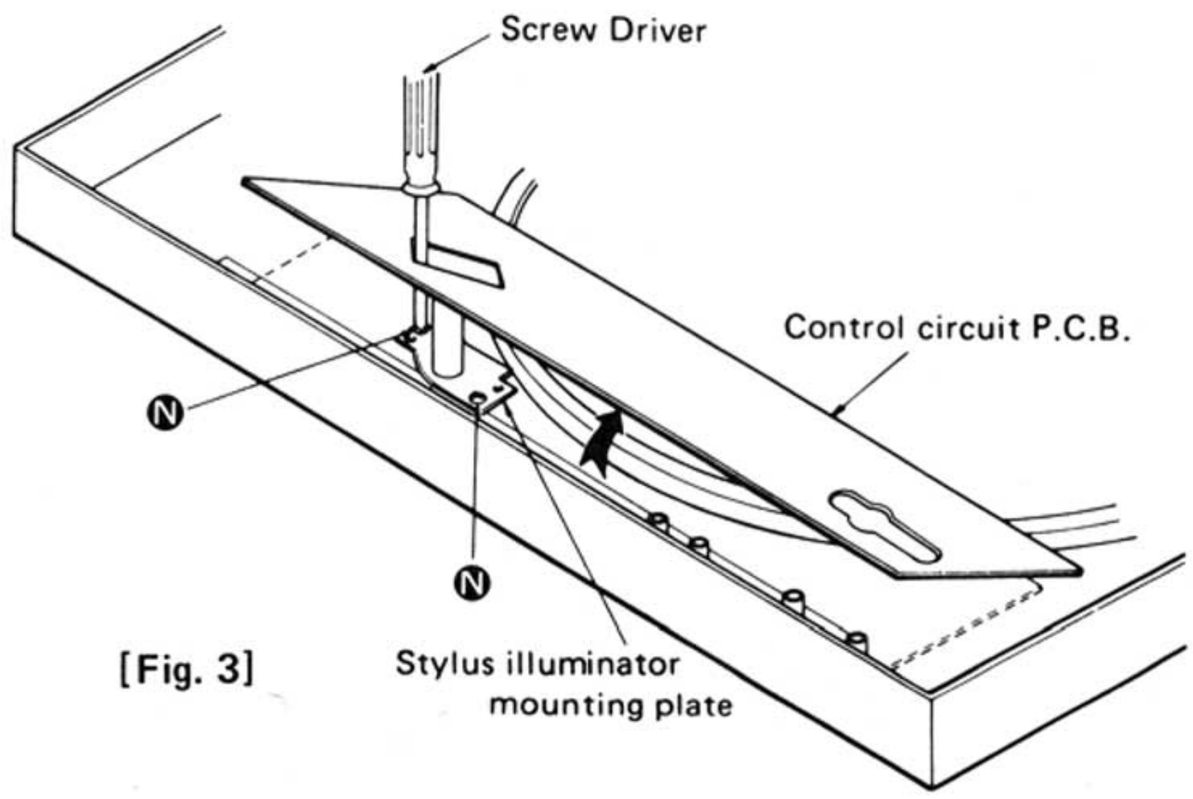

[Fig. 3]

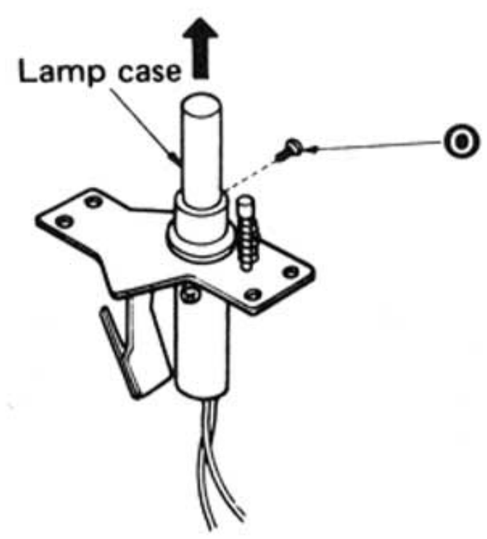

[Fig. 4]

How to remove tone arm

1. Remove 4 screws Ⓟ of the tone arm base ass'y as shown in Photo 5.
2. Remove 1 screw Ⓠ of the shiuld plate as shown in Photo 6.
3. Disconnect soldered of the phono cord reads.
4. Remove 2 screws Ⓡ of the arm drive motor plate as shown in Photo 6.
5. Remove 2 screws Ⓢ of the tone arm fixing plate ass'y as shown in Photo 7.
6. Remove 3 screws Ⓣ of the movable base assembly as shown in Photo 8.
7. Remove 2 screws Ⓤ of the tone arm as shown in Photo 9.
8. To remove the pick-up base plate, remove the arm lift height adjusting screw and the arm lift.
9. Remove 1 screws Ⓥ and 1 circlip Ⓦ of the position fix plate as shown in Photo 9.
10. Remove 2 screws Ⓧ of the pick-up base plate as shown in Photo 9.
11. Remove 2 screws Ⓨ of the cueing lever switch as shown in Photo 9.

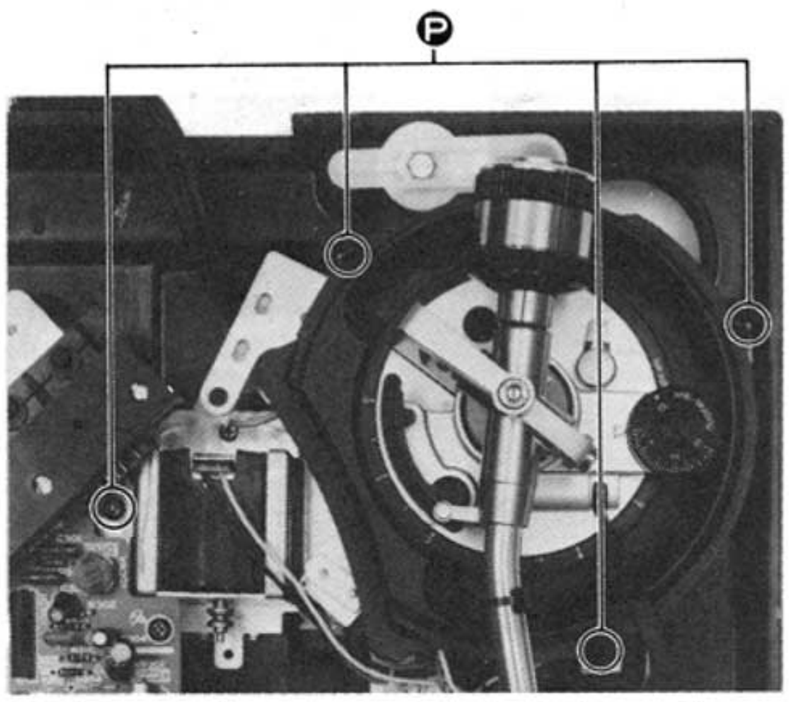

[Photo 5]

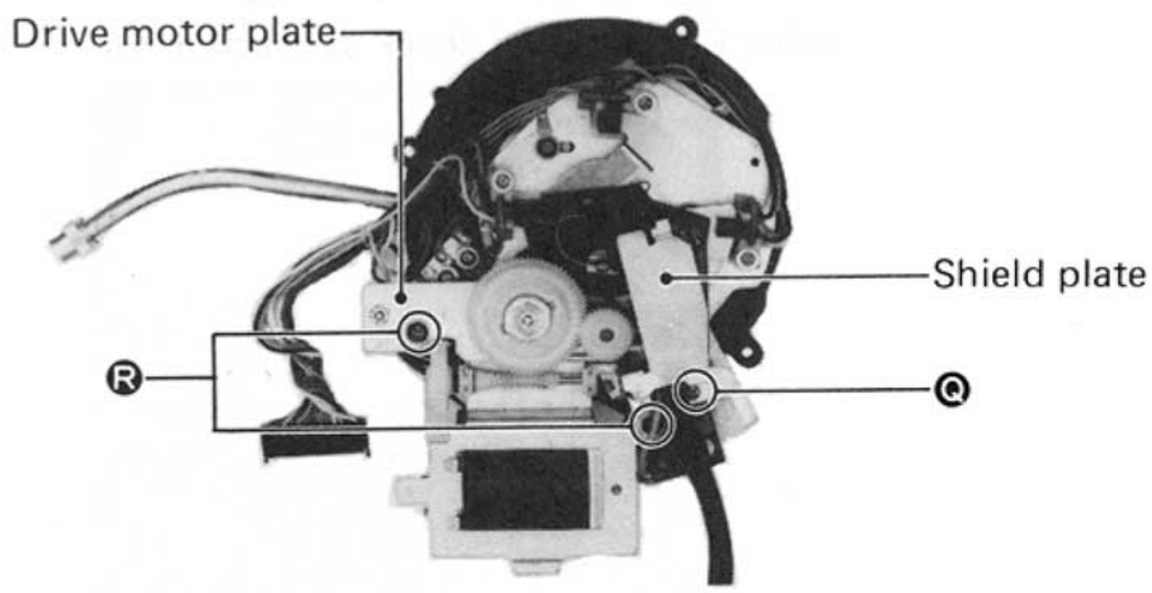

[Photo 6]

www.vinylengine.com

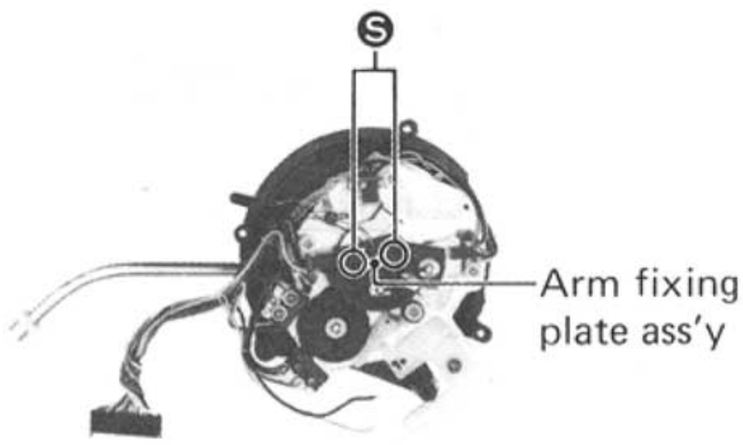

[Photo 7]

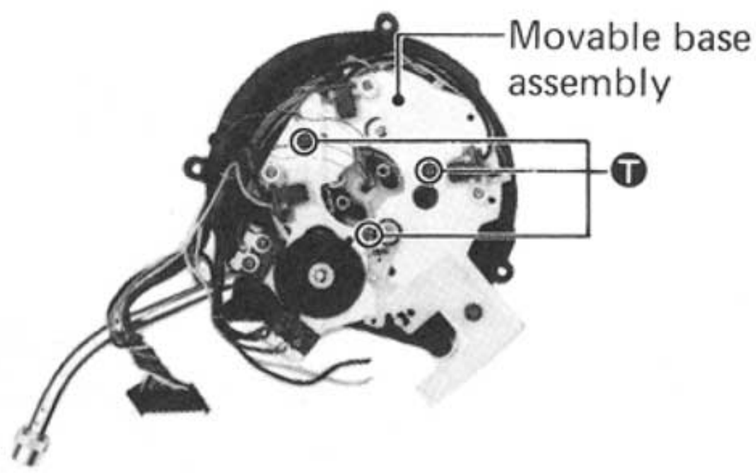

[Photo 8]

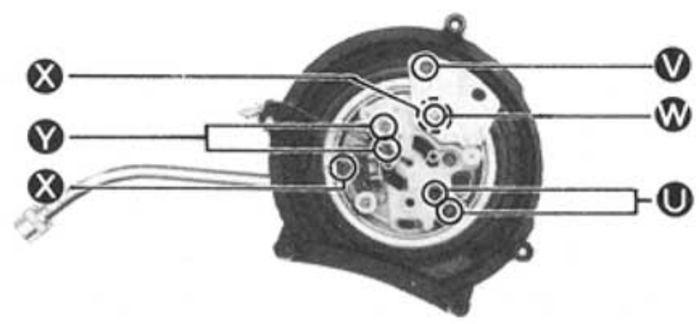

[Photo 9]

Arm Base Assembling Procedure

1. Attach the control ring to the arm base seat.
   (The control ring should be rotated counterclockwise.)
2. Completely tighten the control ring, and then loosen it 1.5 ~ 2.5 turns to set the scale to "3". (See photo 10.)
3. Hold the arm base and set the red line mark on the arm base to the scale near "2", then turn the arm base clockwise. (See photo 11.)
   Note) Take care not to allow deflection of the predetermined positions of the control ring and arm base seat.

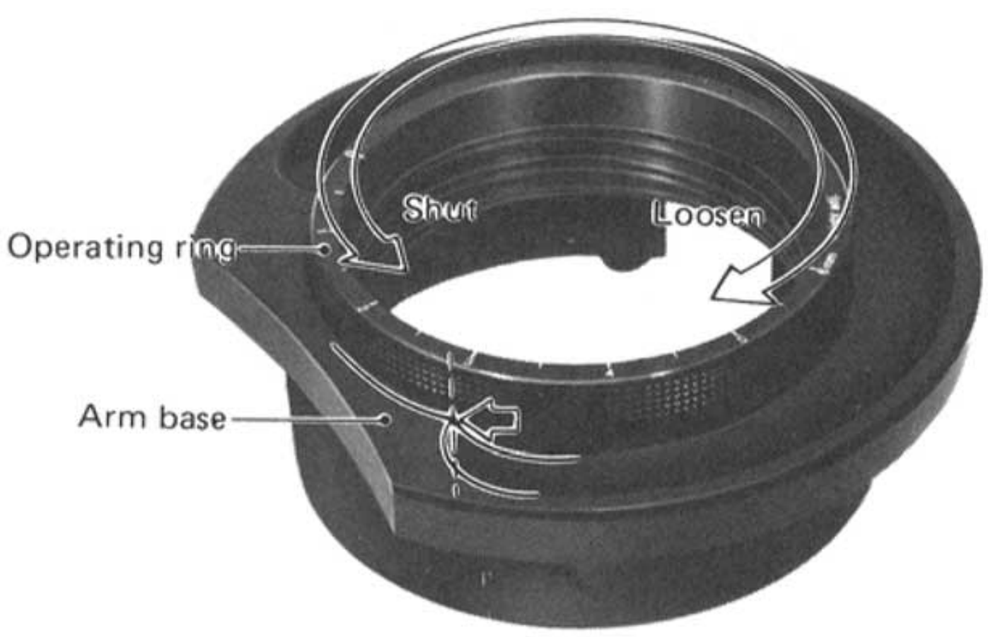

[Photo 10]

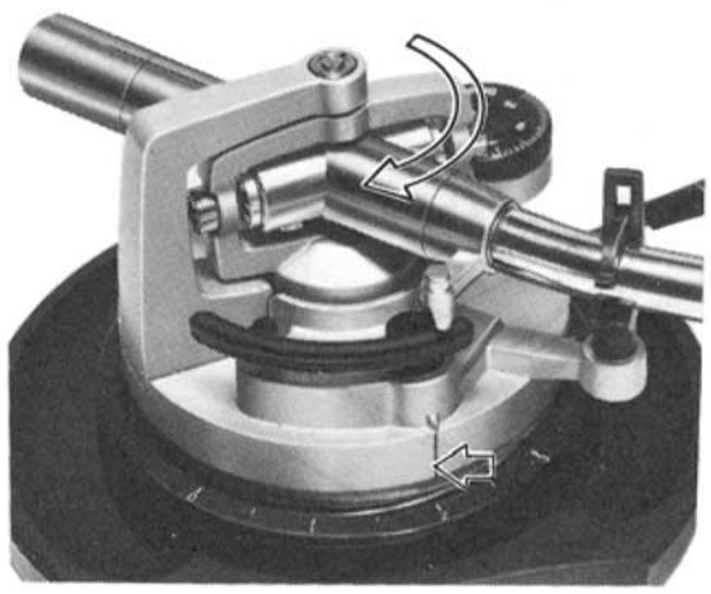

[Photo 11]

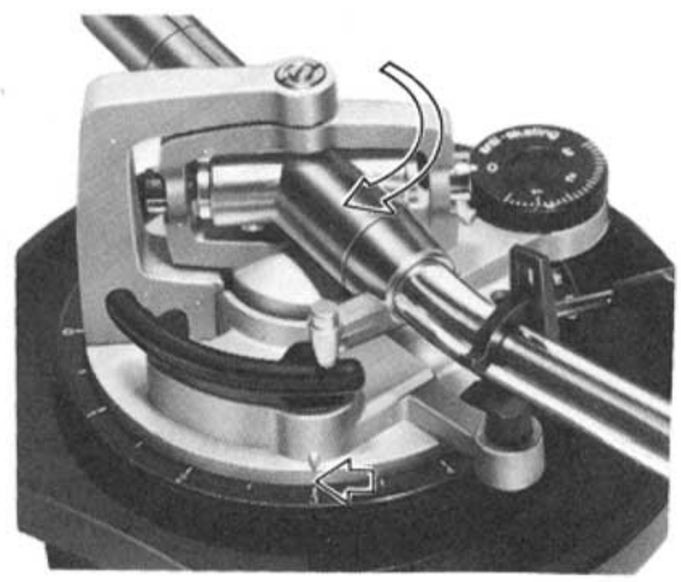

[Photo 12]

4. Adjust the arm base so that the red line mark on the arm base is set to the scale "3" of the control ring. (See photo 12). Next, secure the position fix plate with two setscrews. (See photo 9.)
5. Rotate the control ring and make sure that the arm base shifts within the range of 0 ~ 6mm.
   (See photo 13 A, B.) If it does not shift within the specified range, the arm base position is deflected. In that case, disassemble the parts and check as specified in step 3.

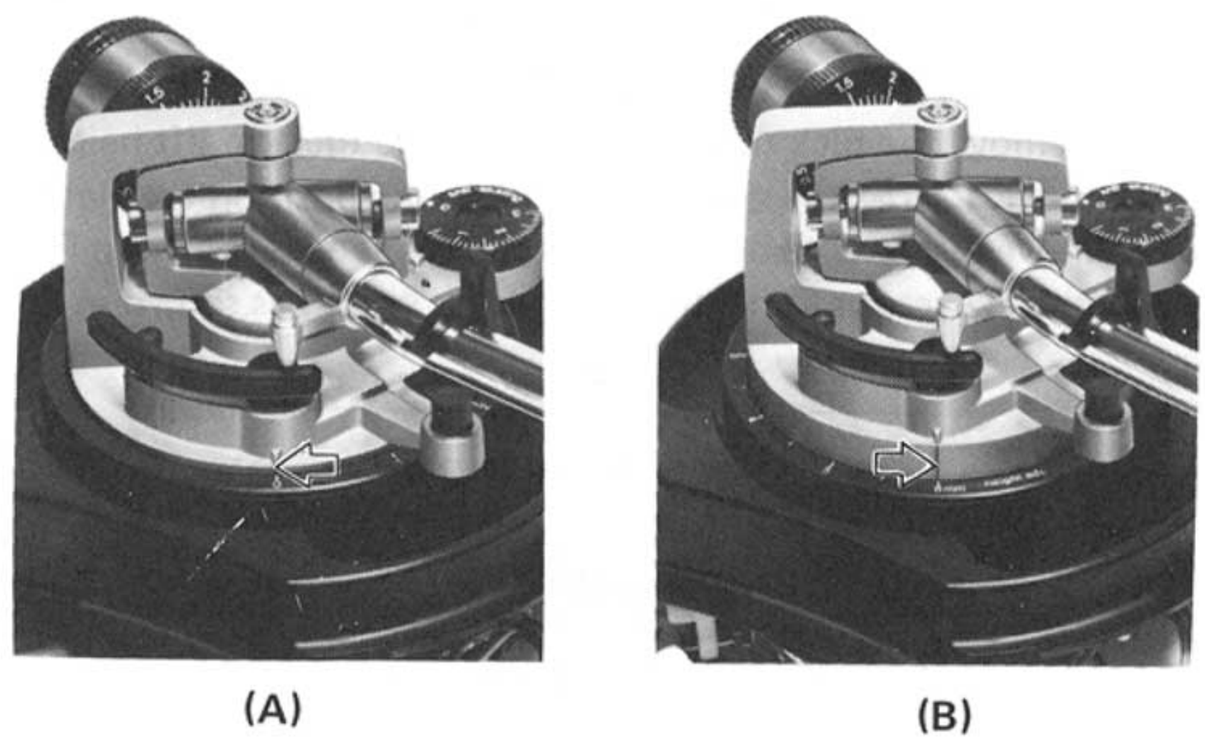

(A) (B)

[Photo 13]

www.vinylengine.com

How to install the drive circuit board assembly

The circuit board assembly can be detached by removing the 4 setscrews ① shown in Photo. 1. When installing it onto the bottom base assembly after adjustment and repair, follow the procedure mentioned below.

1. Temporarily tighten the 4 setscrews ①. (Refer to Photo 1.)
2. Adjust so that the center spindle is aligned to the center of the turntable provided with equal clearances ② as in Fig. 5.
3. Completely tighten the 4 setscrews ①, taking care not to allow deflection of the center spindle.

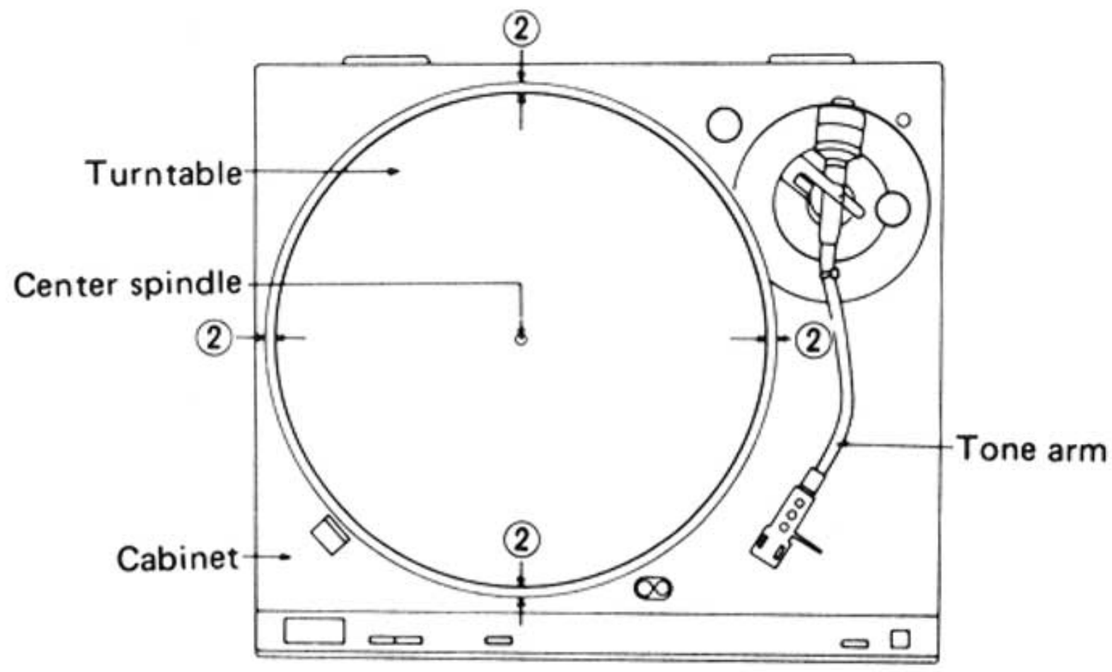

[Fig. 5]

■ ADJUSTMENTS (Electrical)

Notes:
- Make the following adjustments after replacing parts such as IC's, transistors, diodes, etc.
- Condition of the set
  1. Power switch . . . . .ON
  2. Pitch control . . . . .Center position
  3. Speed selector switch . . . .33 r.p.m.
- Instruments to be used
  1. Frequency counter

	Adjustment	connection Points	Adjustment Points	Adjustment Method
A	Adjustment of pitch control ±0% (PITCH)	Frequency counter + → TP27 − → GROUND	**VR301**	1. Pitch control switch to center position. 2. Adjust VR301 for 262.08 kHz ±0.05 kHz of frequency.
B	Adjustment of pitch control LED (GAIN)	Frequency counter + → TP27 − → GROUND	**VR425**	1. Adjust pitch control switch for 269.94 kHz of frequency. 2. Adjust VR425 so that the LED (pitch indicator plus 3%) lights up. (center: + ▨ □ □ □ □ □ □ □ □ □ □ −)
C	Braking adjustment (BRAKE)	——	**VR201**	STOP SIGNAL; 270°; Turntable; 120° Adjust VR201 for complete stop within 120°~270° after stop signal initiated. (turntable becomes free a few seconds after stop.)

■ ADJUSTMENT POINTS

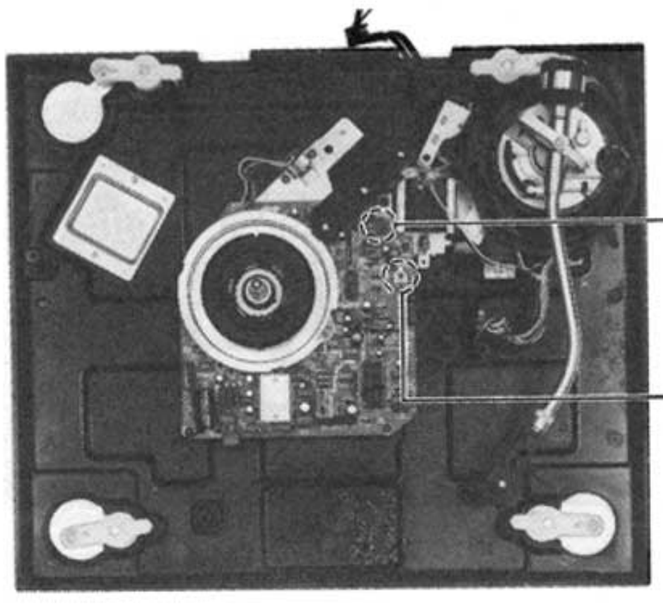

VR301 Adjustment of pitch control ±0%

VR201 Braking adjustment

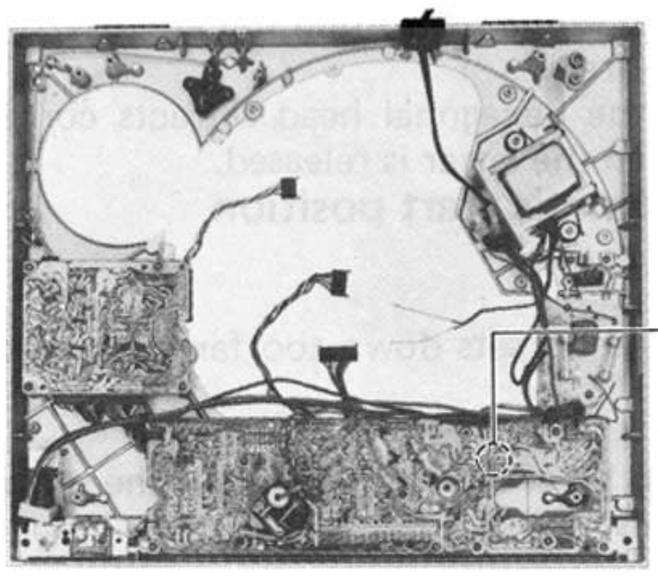

VR425 Adjustment of pitch control LED

www.vinylengine.com

■ ADJUSTMENTS (Tone arm)

Pitch control (fine adjustment of speed) (See Photo 14 and 15.)

As soon as power is applied to the unit by depressing the power switch (▬) the LED lamp lights up indicating that the unit is on.

When the pitch control knob is clicked to position **"0"**, the regular speed (33-1/3 or 45 r.p.m.) is held, and this condition is indicated by the green LED lamp.

However the pitch control feature of this unit allows speed variation of up to −6% . Proper speed variation can be selected while watching the red LED lamp and the scale reading on the pitch indicator. Please note that the scale reding on the pitch indicator shows only an approximate percentage. If LED lamps light ou at two locations (e.g. at positions [2] and [3]), it shows that pitch variation is in the tange of When the strobe dots in 4 stage marked at the peripheral edge of the turntable appear to be stationary, variation of individual pitches is shown. **(See Photo 15.)**

Note:

The strobe-illumination of this unit employs a strobe-illuminator LED synchronized with the precise quartz frequency.

For fine adjustment of the turntable speed be sure to effect the adjustment according to the LED illumination.

The LED illumination is not synchronized with fluorescent lamps.

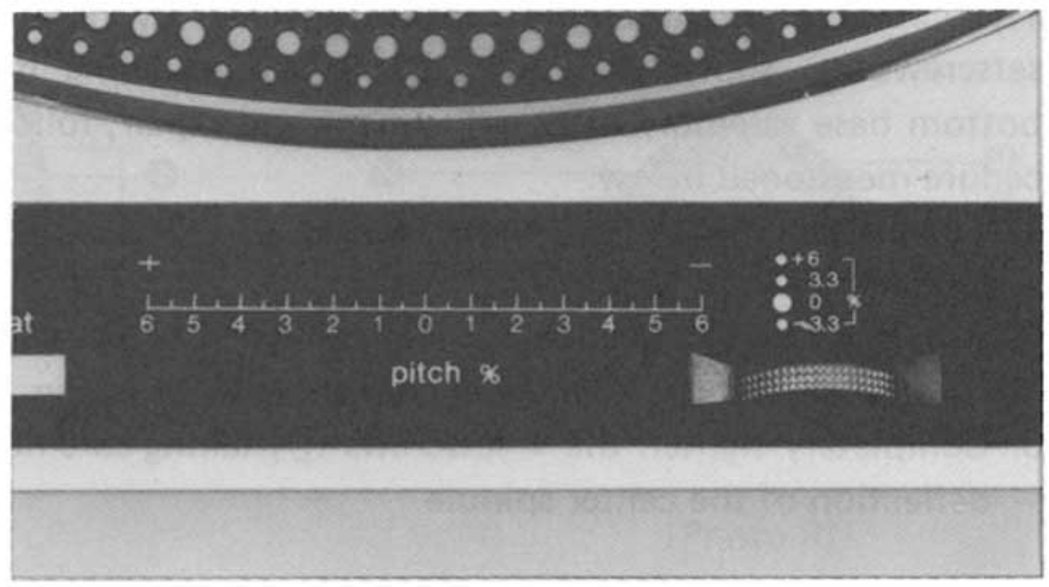

[Photo 14]

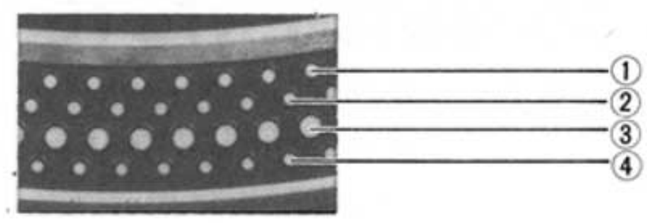

① appears stationary at the pitch of +6%
② appears stationary at the pitch of +3.3%
③ appears stationary at the pitch of 0%
④ appears stationary at the pitch of −3.3%

[Photo 15]

Adjustment of muting timing (height of arm lift) (See Photo 16 and 17.)

This unit is fitted with a muting feature which is used to cut off irritating noise caused at the moment the stylus is brought down on or lifted ou from the disc surface.

Muting timing can be adjusted by the height of the arm lift, a clearance between the stylus tip and the disc surface while th thetop of the tonearm is at the **"up"** position (▼) by depressing the cueing switch button. The height of the arm lift was adjusted to a range of 8 − 13 mm before shipment from the factory. **(See Photo 16.)** Perform the adjustment in the following manner when adjustment is needed for the cartridge being used.

when adustment is needed for the cartridge being used.

- To begin wirh, protect the tip of the stylus with the stylus cover.
- Turn off the power switch(■) so that the turntable should not move.
- The top of the adjust screw is hexagonal.
  While holding the arm lift down, turn the adjust screw.

Remomber to depress the arm lift downwards in turning the adjust screw. **(See Photo 17.)**

If recorded sound cannot be reproduced at once after the stylus was lowered on to the disc surface.

try to adjust the timing by turning the adjust screw counterclockwise and thus increasing the distance between the stylus tip and the disc surface.

In case irritating noise is generated when the stylus is lowered on to the disc surface.

decrease the distance by turning the adjust screw clockwise.

Note:

As the adjusting screw has a hexagonal head, be sure to make the adjustment while depressing the arm lift, or the screw will not move freely.

Also be sure that the hexagonal head retracts correctly into the arm lift when the latter is released.

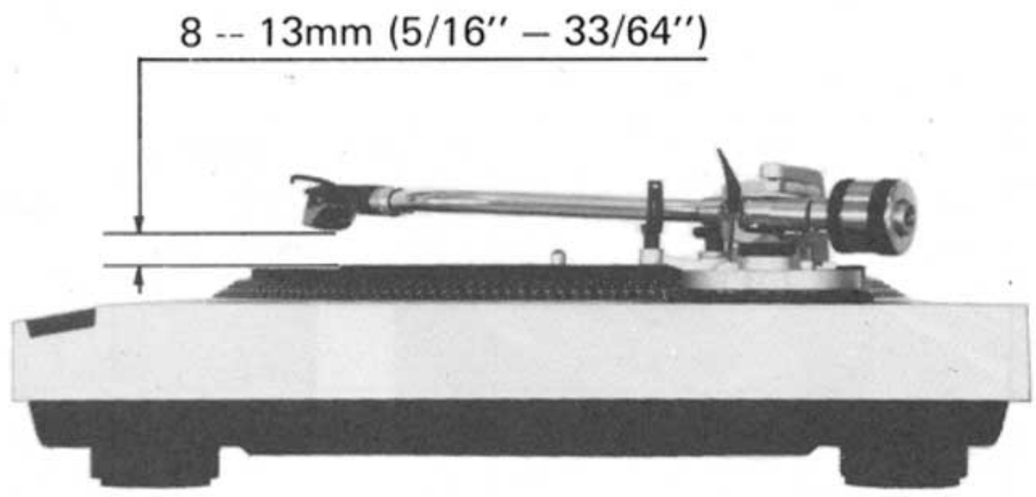

[Photo 16]

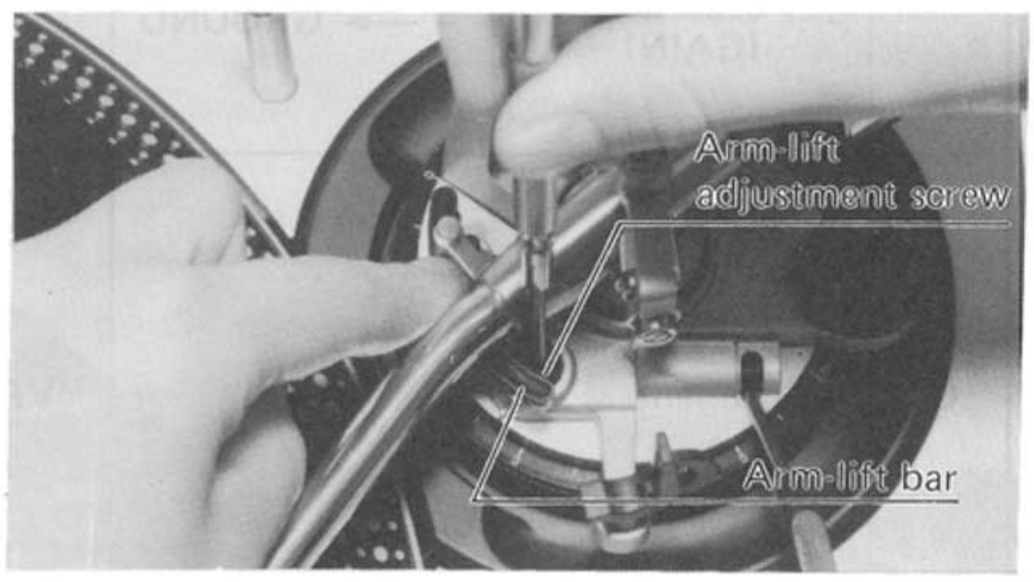

[Photo 17]

Adjustment for automatic start position (See Photo 18.)

(Remove the rubber cap)

In case where the stylus tip sets down too far in the record groove.

—rotate clockwise.

In case where the stylus tip sets down outside of the record.

—rotate counterclockwise.

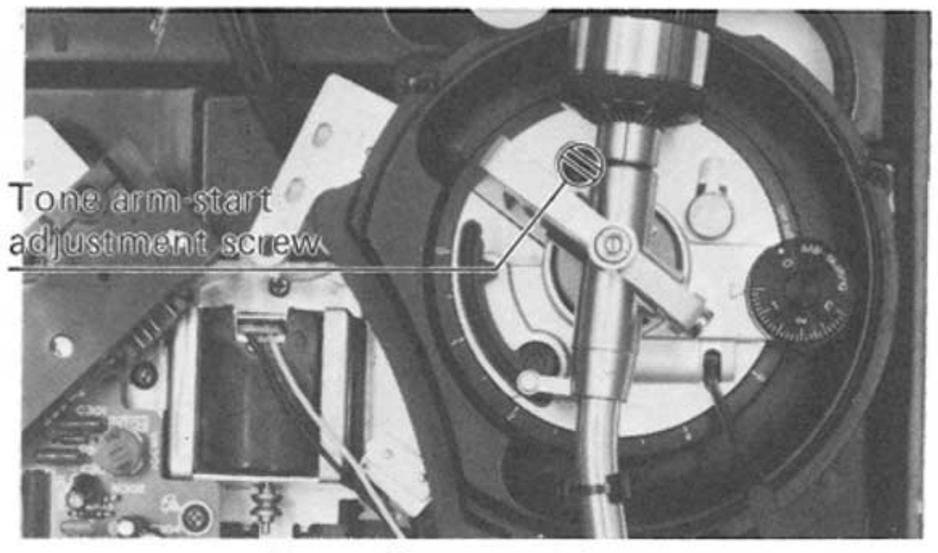

[Photo 18]

www.vinylengine.com

■ FEATURES

Direct-drive full-auto player using 4-bit, 1-chip microcomputer (MN 1400PA)

(1) Automatic detection of record diameter.
(2) Automatic control of tone-arm operation.
(3) Detection of final groove, auto return, auto repeat.
(4) Additional function to prevent faulty operation.

- **Record Size Select**
  This is a record diameter detecting function using an optical non-contact system: The turntable is provided with a prism to detect the record disc when the prism is interrupted by the disc. Three infrared LED's are arranged in the panel under the turntable, which are individually lit with pulse, checking the output of the light sensor located besid the arm base on the LED control signal through the software, in order to judge the size (30 cm, 25 cm, 17 cm) of the record. Thus, this is an autmatic version of size setting, conventionally based on manual reset.

- **Auto Start**
  When the tone-arm is on the arm rest, pushing the start/stop key causes the record side detection to be performed. Then, the tone-arm is turned to the outermost periphery of the record disc and is lowered at that point. If no disc is on the turntable, then the start instruction is cancelled and the tone-arm is shifted back onto the arm rest.

- **Auto Return**
  It includes two photo-interrupters provided at the tonearm driving mechanism and an end detector based on a non-contac system using a variable slit, which is of position detecting type to select the photo interrupter in accordance with the record size (30/25 cm, 17 cm). When the final groove of the record is detected, the tone-arm moves up and returns to the arm rest.

- **Auto Repeat**
  With this function set at ON, the tone-arm is lowered at the outermost periphery of the record in order to repeat the performance, When this function is OFF, the tone-arm returns onto the arm rest to terminate the performance.

- **Auto Cut**
  When the start/stop key is pushed during performance, the tone-arm returns onto the arm rest thus terminating the performance. In this case, the Auto Repeat is forced to turn "OFF" requiring no manual release.

- **Cueing**
  This is a double cueing system by which the cueing operation can be done by both the key switch provided at the front control panel and the cueing lever located at the tone-arm stand. When either key switch or cueing lever is operated, the tone-arm is moved by the arm driving motor. Operating the key switch causes the cueing lever to move because it is interlocked with the tone-arm.

www.vinylengine.com

■ TECHNICAL GUIDE

Tone arm drive control . . . . . Mechanical

The mechanism is the combination of one each of DC motor, planetary gear, and cam, and the tone arm is turned and moved up and down by a motor. By the driving circuit of an electronic governor, the motor is controlled so as to turn in both forward and reverse divections respectively in two speeds. For the rotation and speed change, the output of E port (E00 and E02). is used. Since the turning and also the up-down motion are controlled by a motor, the motor rotation and speed shall be decided while monitoring the condition of the mechanism. For this, two limit switches are provided, and the signal is connected to AI2, AI3, and by the combination "ON", "OFF" of these switches, the mechanism condition is monitored.

Three interrupters are provided to detect the position for tone arm turning, and each one of the interrupters is combined with a shutter place so as to detect the outer peripheral position (30cm, 25cm, 17cm), and the end position (30cm/25cm common, 17cm). The output signals are connected to B port (BI0 ~ BI2) respectively and are processed as 3-bit parallel deta.

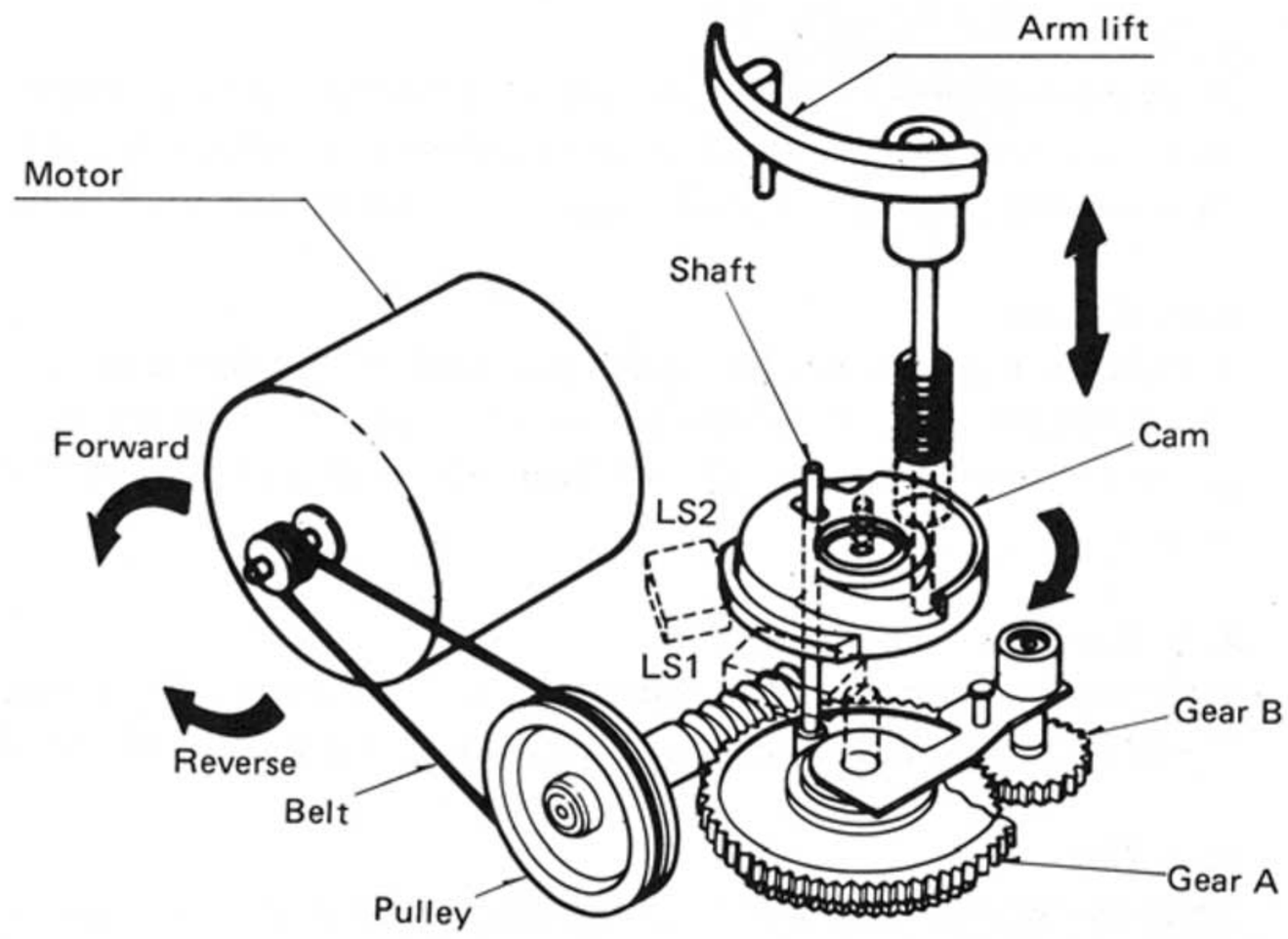

- **Auto Start**

1) Motor rotates in forward direction and the power is transmitted by belt, and the worm attached to the pulley rotates gear A in the direction of the arrow. Then the cam is rotated in the same direction by the shaft fixed on the gear, causing the limit switch to shift its position from Fig. 1 to Fig. 2, when the arm lift is raised to move the tone-arm upward.

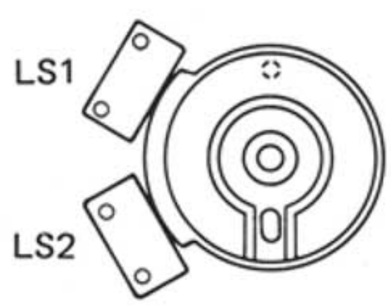

[Fig. 1]

Arm is in stop.	
LS1	LS2
ON	ON

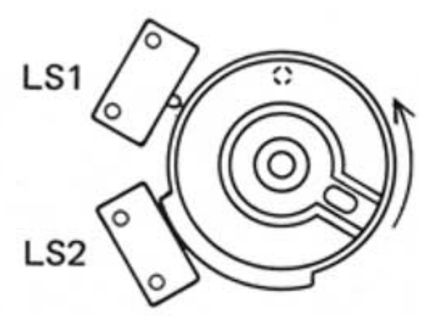

[Fig. 2]

Arm is moving up.	
LS1	LS2
OFF	ON

www.vinylengine.com

2) When tone-arm moves up, the cam is fixed at the position as in Fig. 3. Subsequently, the mechnism operates to move the tone-arm onto the record disc. It is illustrated in Fig. 4.

3) When the shaft reaches point Ⓐ to push the operation plate, the rubber roller simultaneously touches the outside of the fixed plate being combined with the arm, thus giving a rotational force to move the arm onto the record disc.

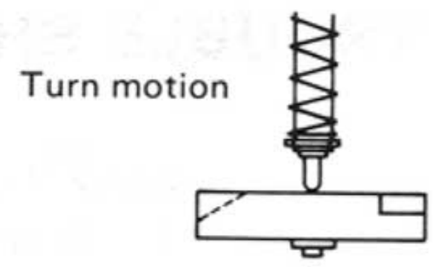

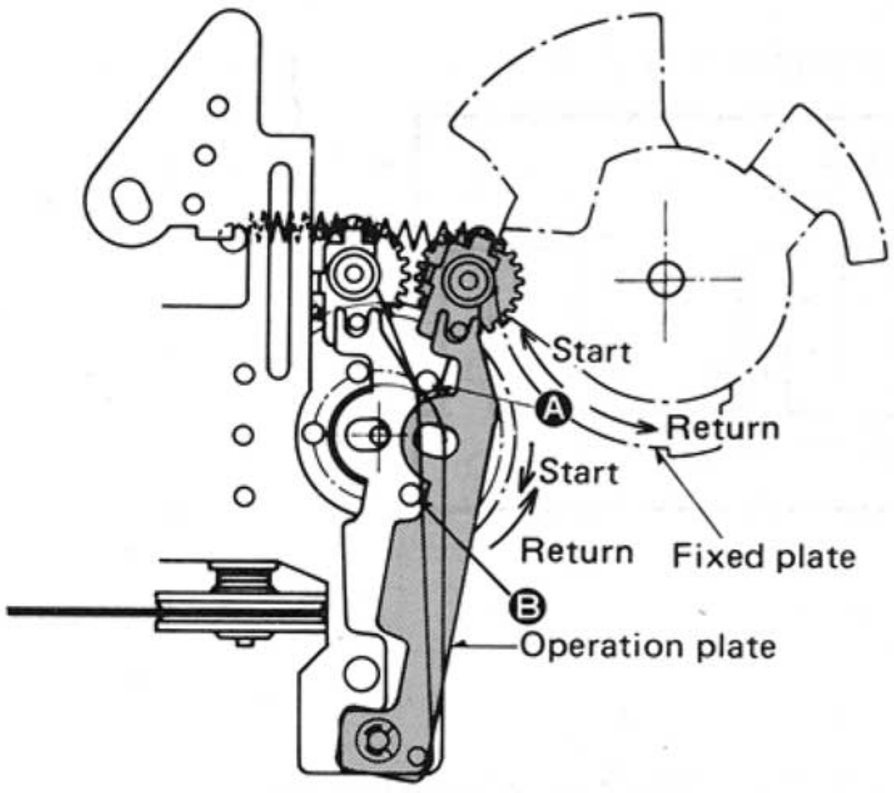

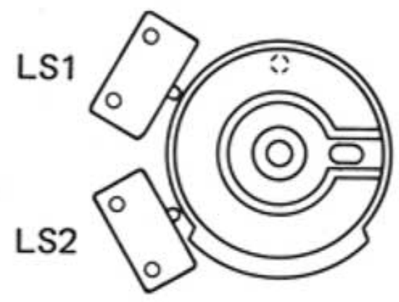

[Fig. 3]

Arm is at highest position.	
LS1	LS2
OFF	OFF

[Fig. 4]

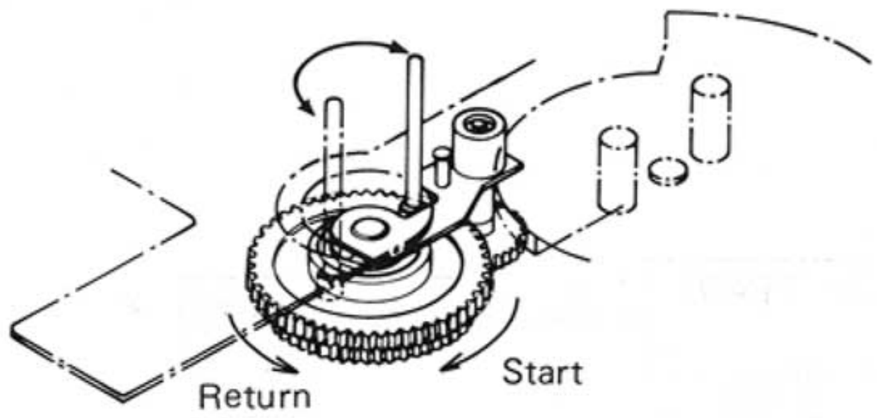

4) The arm stops at the specified position according to the detection of record size, and then moves down onto the record disc. The movements of the cam for this operation can be followed up by referring to Fig. 3 – Fig. 2 – Fig. 1. The cam remains still in the position of Fig. 1 during performance of the record.

5) When the end position is detected after performance of the record, the arm must be moved up. To achieve the purpose, the cam is rotated in reverse direction to raise the lift. (Fig. 5)

When the lift reaches the highest position, the shaft touches the position Ⓑ in Fig. 4, pressing the operation plate to give a reverse rotational force to the fixed plate (in arm returning direction), then the arm slowly returns to the rest position. The cam position during its return motion is shown in Fig. 6.

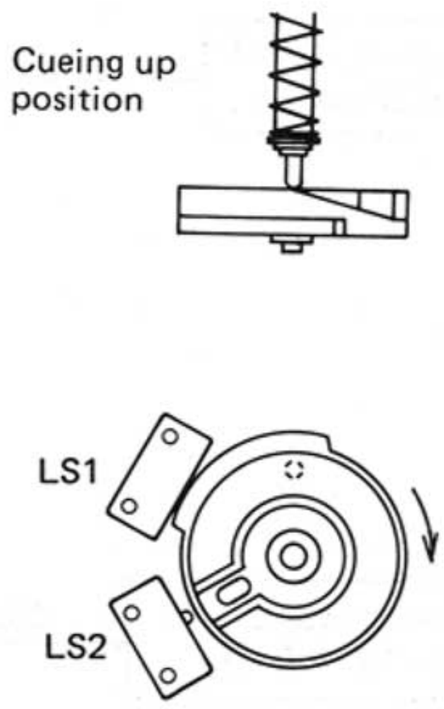

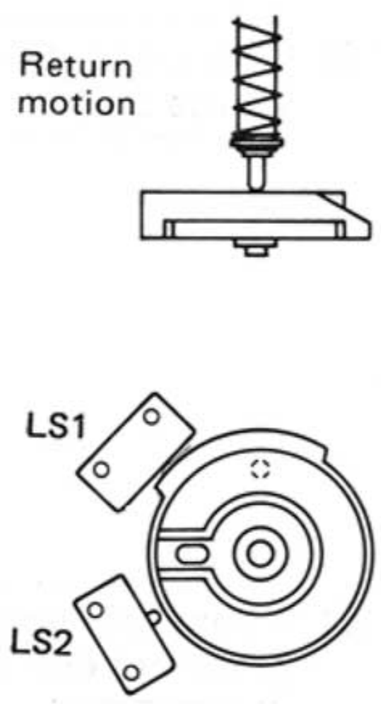

[Fig. 5]

Arm is moving up. (Return motion)	
LS1	LS2
ON	OFF

[Fig. 6]

Return motion (Arm is at highest position)	
LS1	LS2
ON	OFF

7) When the arm comes above the rest, the photo interrupter becomes "L" level, then instruction is given for lowering the arm.
The cam operates to shift the arm onto the rest as illustrated in Fig. 6 – Fig. 5 – Fig. 1.

www.vinylengine.com

- **Muting switch**

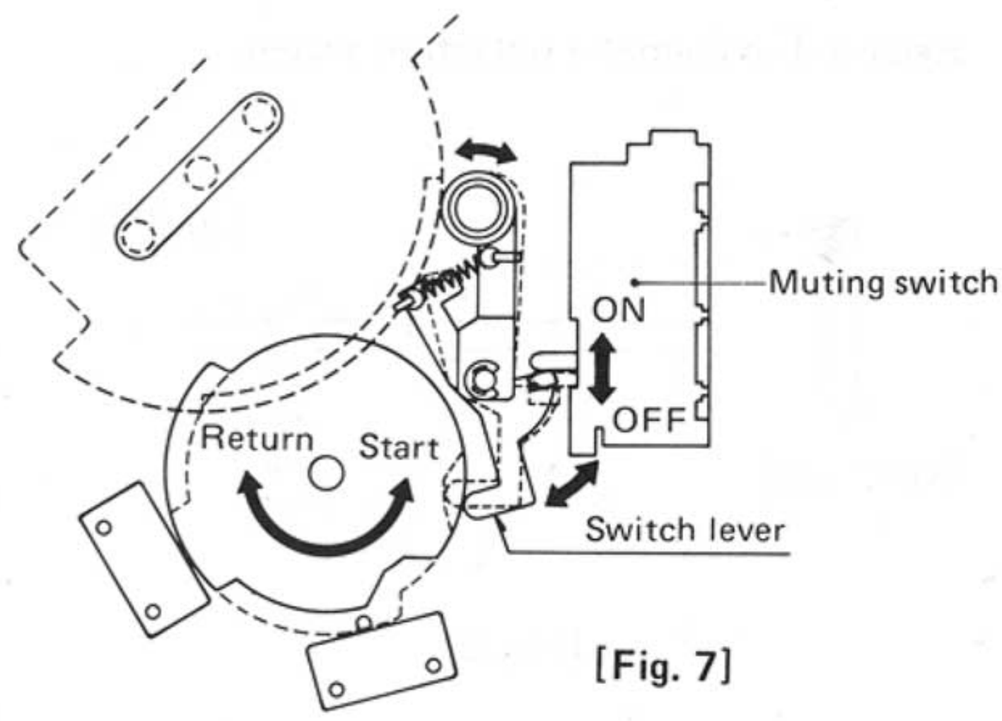

[Fig. 7]

Tone-arm drive control — Electrical

1) High-speed forward operation

When E00 is at "H" level, the base potential of Q901 increases, causing the emitter potential to increase as well. The base potential of Q902 is low beause E01 is at "L" level, therefore the emitter potential is low. Consequently, potential difference is generated between the emitters of Q901 and Q902, and then about 7V is applied to the motor thus causing the motor to rotate at a high speed in the forward direction.

2) Low-speed forward operation

When both E00 and E02 become "H" level, R909 is ignored. Then, the base bias of 905 is enhanced because the level difference between R905 and R907 becomes greater, causing the collector potential to decrease. Accordingly, the emitter potential of Q903 also tends to decrease, so the voltage applied to the motor is lowered to about 5V.

3) High-speed and low-speed reverse operation

Changing the input position makes reverse operation possible in accordance with the same procedure as in paragraphs 1 and 2.

4) Stop motion

If both point Ⓐ and Ⓑ are at "L" level, current flows through D1 and D2 to the base of Q901 and Q902. As the potential difference is OV between Ⓧ and Ⓨ points, the motor does not turn.

Motor operation	Point Ⓐ	Point Ⓑ	Point Ⓒ
Stop	L	L	L
Forward high speed	H	L	L
Reverse high speed	L	H	L
Forward low speed	H	L	H
Reverse low speed	L	H	H

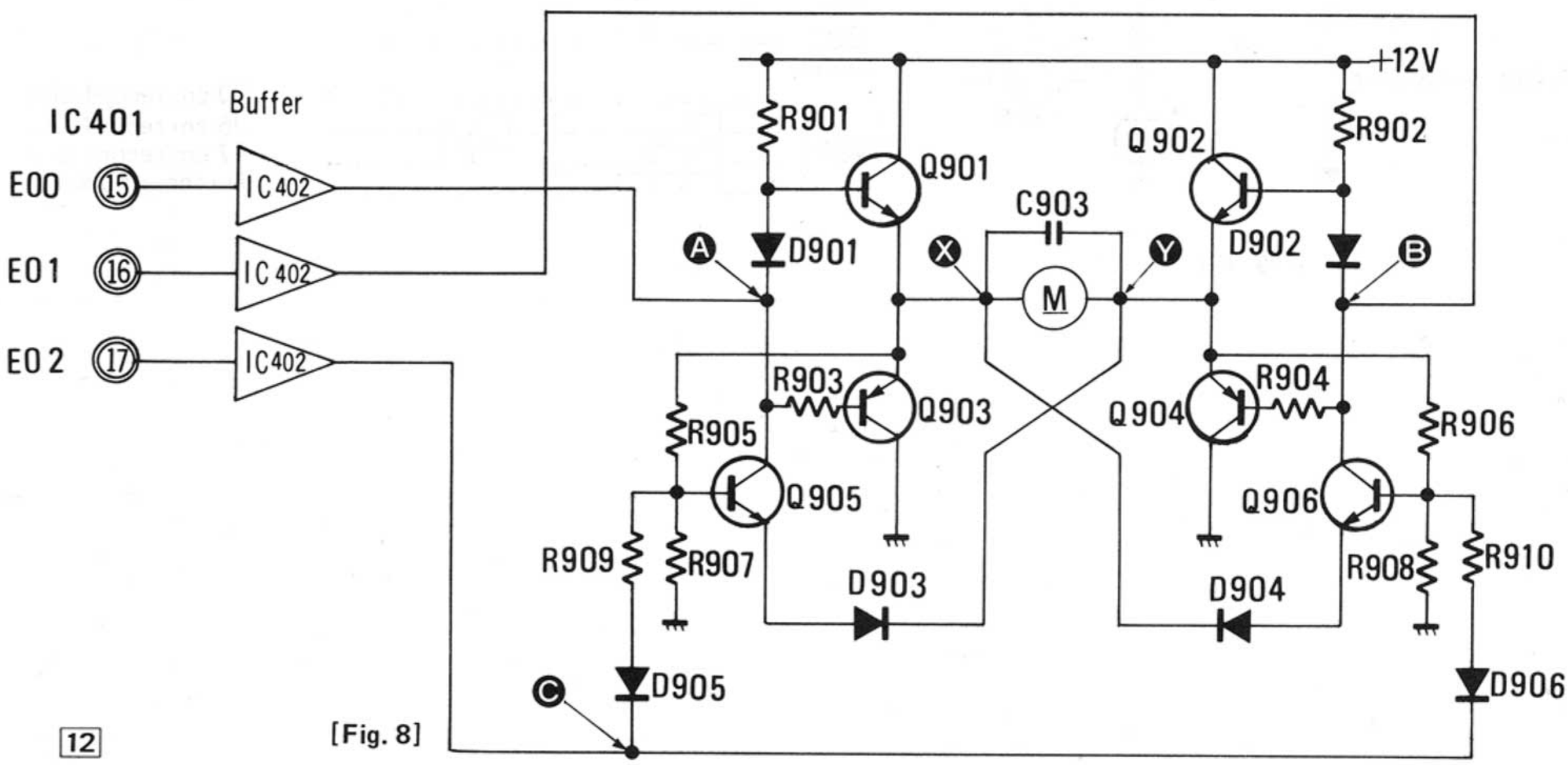

[Fig. 8]

www.vinylengine.com

Record disc diameter detection system

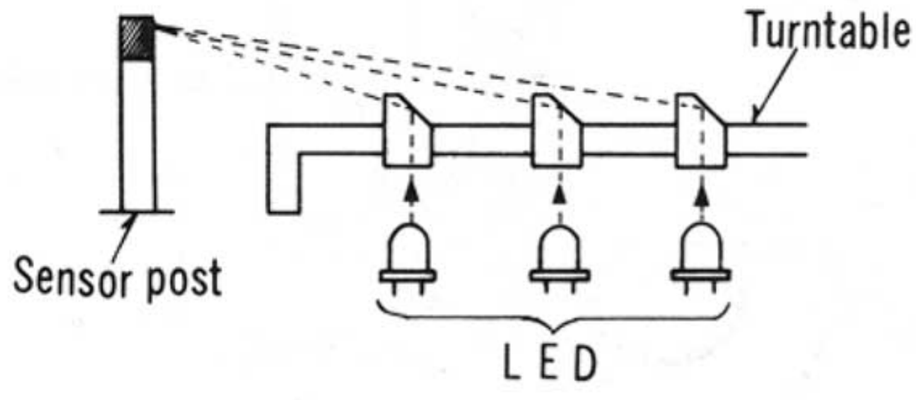

[Fig. 9]

The record disc diameter detection mechanism of optical non-contact type by the prism provided on turn-table to detect the shielding when a record disc is placed on the table. Three inflared LEDs are provided in the panel under the turn-table tobe turned on by pulse signal one after another. The size of record disc (30 cm, 25 cm or 17 cm) is judged by the corss reference between the light sensor at a side of the arm base and ON control signal of LED by a soft-ware method thus the size setting made so far by manual presetting is improved to automatic setting.

LED indicating circuit

Three LEDs are connected to D port (D00 – D02) through beffuers, and by the output of D ports, the LEDs are turned on one after another with the intervals of 20 μs. The signal from the light sensor is converted into the pulse signal of TTL level by the pulse amplifier. Since the illumination time of LEDs is only 20 μs, the pulse width of the obtained pulse signal is also 20 μs at the most. If the LEDs are connected to ordinary input ports, the timing to execute the input command may possibly be delayed due to the variation of the hardware transmission delay time. With this equipment, this problem is solved by using the SNS 1 input having a non-synchronous latch.
The disc size detection prisms are provided 120° apart at three points on the turn table and at least one of the three prisms shall pass over the LED for size detection. If the turn table is locked manually, therefore, erroneous detection of disc size may result. An interlock mechanism is provided to prevent disc size detection unless the turn table turns in normal condition. For this purpose, BI3 is used as the input terminal to convert the current thourgh DD motor into TTL level as the input signal.

If the signal from D port is at "L" level, Q401 is "OFF", and +12V is appied on Ⓓ point, therefore, Q907 is also at "OFF". At "H" level, both transistors are turned ON so LED is on.

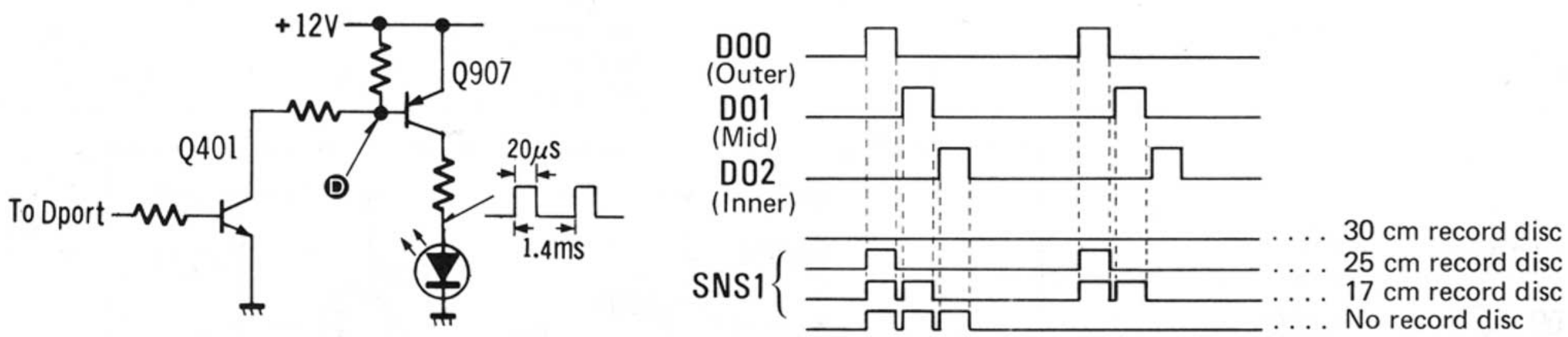

[Fig. 10]

www.vinylengine.com

■ TROUBLE SHOOTING GUIDE

Check the following points before strating repair.

1. Connectors and wire connections are perfect.
2. With power switch turned ON, 33 r.p.m., pitch indication LED and strobe LED light up.
3. With power switch turned ON, the waveforms of pins 5 and 6 of IC401 are as shown in Fig. 11.

Waveform of 5 pin

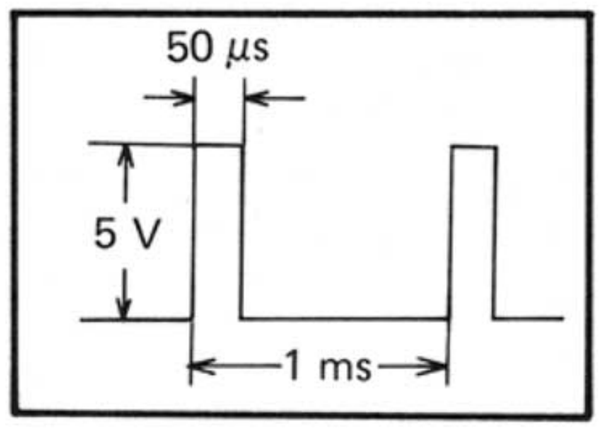

Waveform of 6 pin

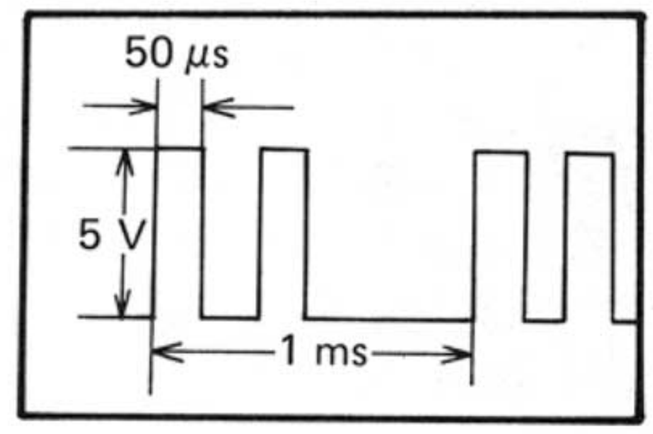

[Fig. 11]

[Note]
If a defect is found in the above check, the power supply circuit, IC401 or IC402 may be defective.

Defective operation (Arm drive circuit)

1) Auto start failure

(A) Turn table doesn't operate (Start/Stop switch "push") → IC401 ③ pin (TP403) +5V check
- No → IC401; IC402
- YES → IC401 ⑪ pin (TP410) +5V check
  - No → Drive circuit IC101

(B) Tone arm doesn't move up → Cueing switch S403 works
- No → Check voltage TP908 . . . +5V, TP909 . . . 0V, TP910 . . . 0V
  - No → IC402, IC401
  - YES → Q901 ~ 906, D901 ~ 906, Arm drive motor

(C) Tone arm doesn't move to disc record → Check waveform TP917 ~ 919
- No → Check waveform TP905 ~ 907
  - No → IC401, Q401 ~ 403
  - YES → Q907 ~ 914, Sensor post
- → Check mechanism of arm drive part

(D) Auto start position isn't good → Adjustment of start position

(E) Auto return position isn't good → Adjustment of return position
- No → PC502, PC503

www.vinylengine.com

2) Runaway operation

Check voltage and waveform at IC201 → No → Check voltage and waveform at IC101 → No → FG circuit check check voltage on Q203 → No → Q203 FG coil

3) Turntable rotates abnormally

Check voltage and waveform at IC301, IC302 → No → IC301 IC302

4) Pitch control malfunction

Check voltage on Q201 Emitter . . . . . +9V → No → Check voltage and waveform at IC301 → No → IC301

5) Pitch control - LED not illuminating

Check voltage at IC428 → No → Check voltage at IC429 → No → IC429 D429 ~ 440

ADJUSTMENT FOR AUTOMATIC RETURN POSITION

(Remove the rubber cap)

- **17 cm disc record (See photo 19)**
  In case where the tone arm tends to return before the playing has finished.
  . . . . . rotate counterclockwise.
  In case where the tone arm fails to return after the last groove of the record has been played.
  . . . . . rotate clockwise
- **25 cm, 30 cm record (See photo 20)**
  In case where the tone arm tends to return before the playing has finished.
  . . . . . rotate countercolckwise.
  In case where the tone arm fails to return after the last groove of the record has been played.

[Photo 19]

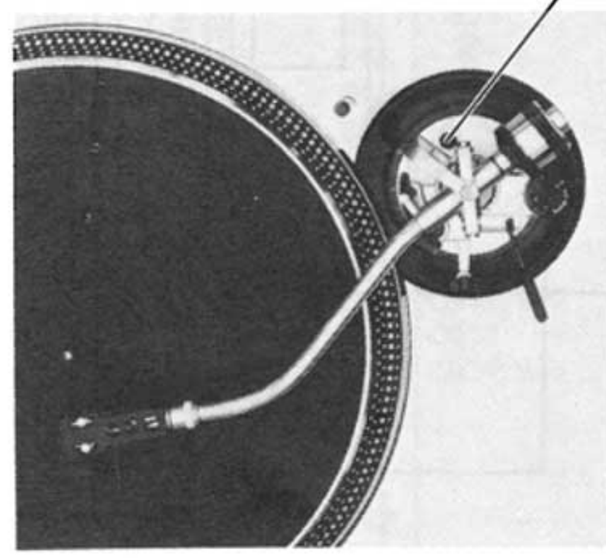

[Photo 20]

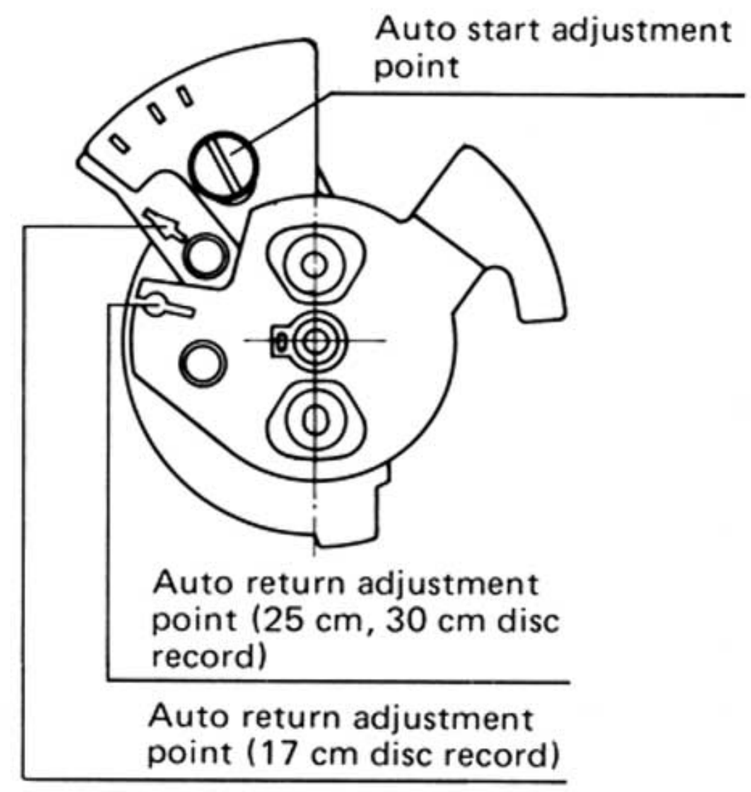

[Fig. 12]

www.vinylengine.com

■ TIMING CHART OF TONE ARM DRIVE CONTROL

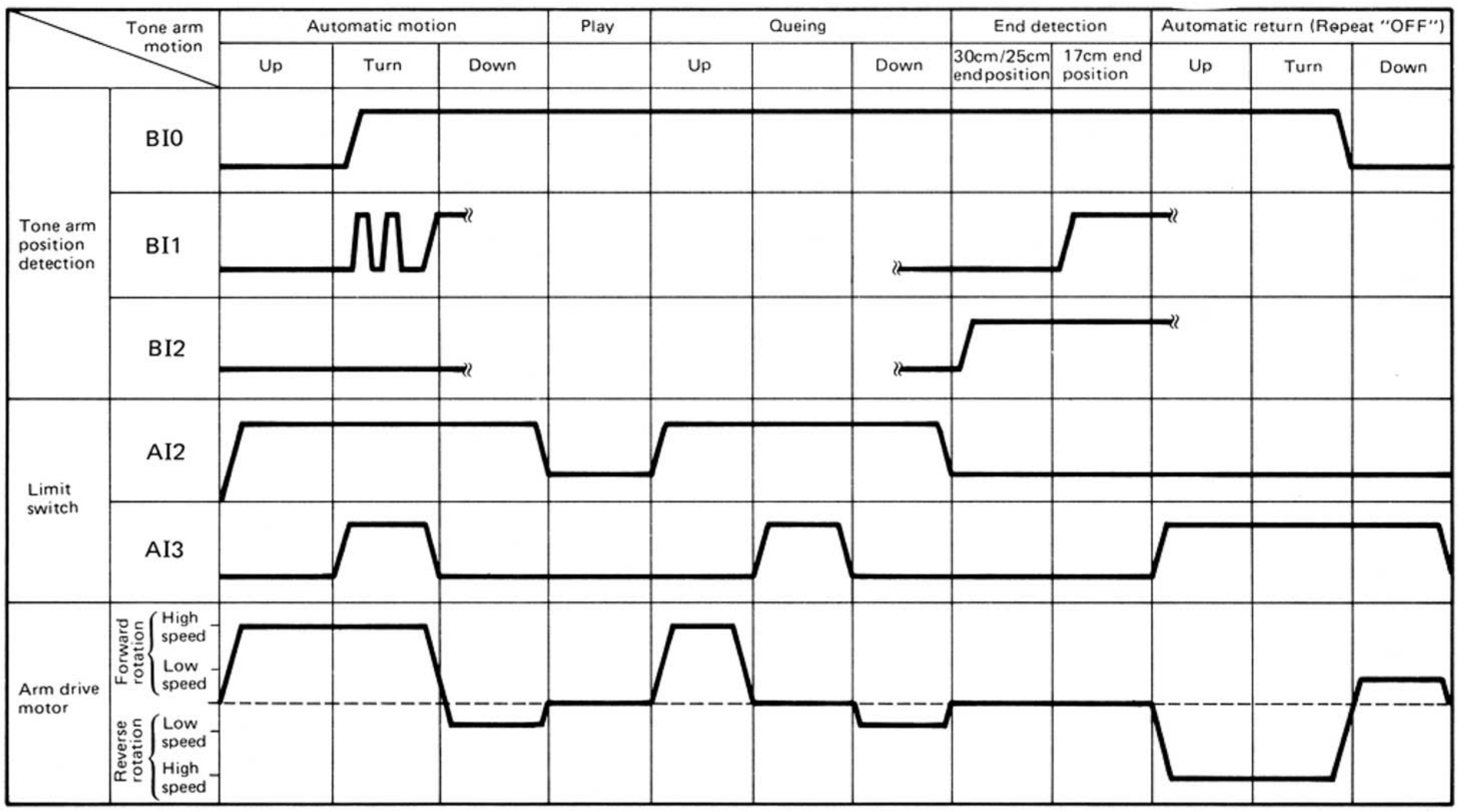

■ FLOW CHART OF AUTO START MOTION

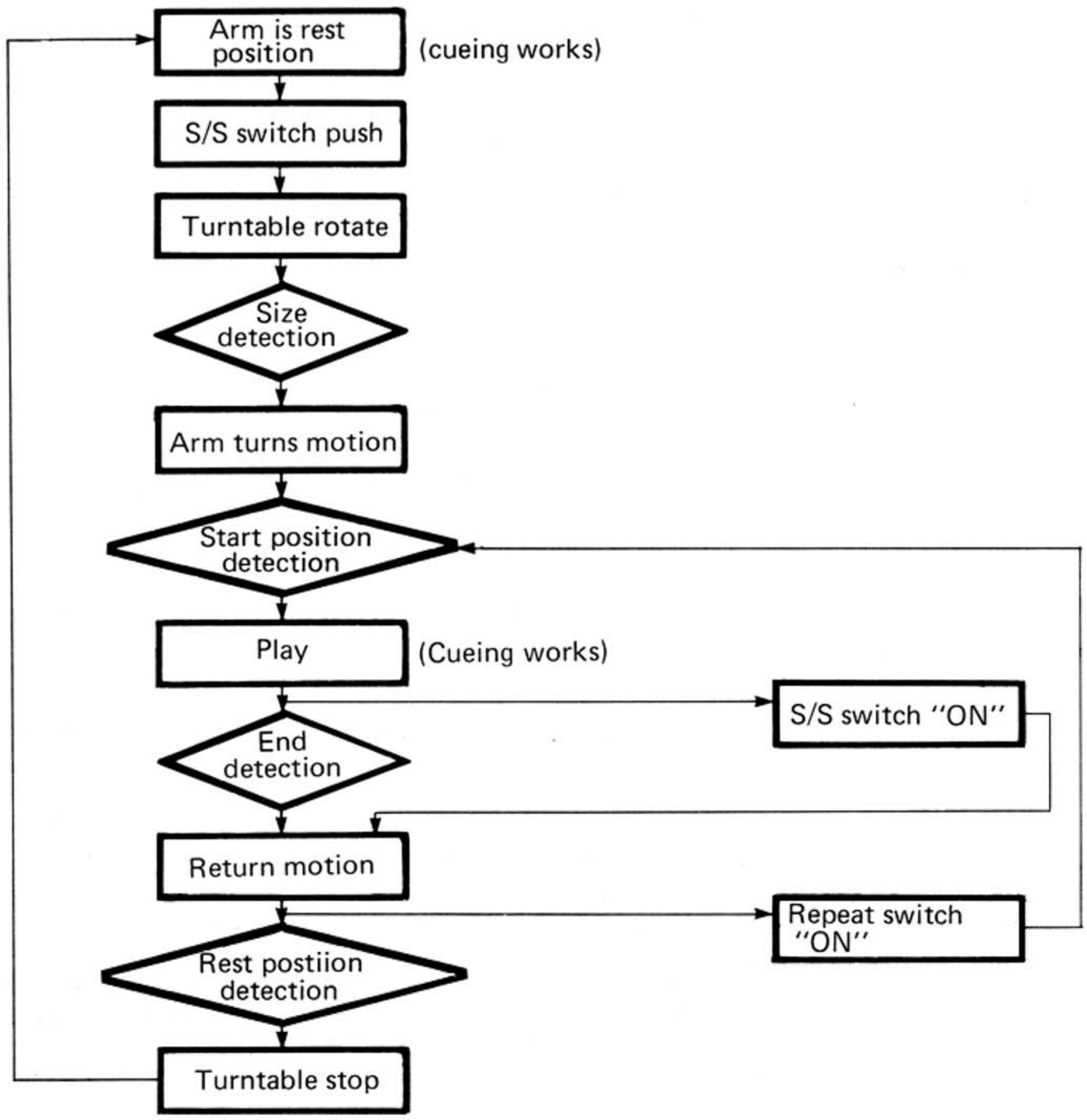

www.vinylengine.com

■ MN1400PA

PIN NAMES AND FUNCTIONS OF MN1400			
Pin No.	Symbol	Name	Function
1	Vss	Ground	Reduction to earthing potentiona (Normally 0V)
2	Co9	Repeat	LED lamp switch for repeat indication. "H" level at ON.
3	Co8	Start/Stop	Start-Stop control Signal. "H" level at start.
4	Co7		No provided to this set.
5	Co6	Start/Stop and repeat	For start-stop instructions.
6	Co5	Cueing	When the cueing lever switch is turned to up direction, AI1 and this terminal are shorted.
7	AI3	Limit switch	Both in indicate "H" level at cueing up.
8	AI2	Limit switch	
9	AI1	Cueing	Input terminal for cueing (2 motions).
10	AI0	Start/Stop	Input terminal for start-stop and re.
11	BI3	Start detection	The terminal to check if the turntable is in rotation. "H" level during rotation.
12	BI2	End detection	When the pulse for end defection of LP record is give, the level is turned to "H" and the arm return motion follows.
13	BI1	End detection	Like BI2 terminal, end detection of EP record is made by BI2 terminal and this terminal.
14	BI0	Rest	"L" level when the arm is on the rest and "H" level if the arm is out of the rest.
15	E00	Motor drive	Instruction is given to the arm and the driven motor (Forward rotation, reverse rotation, low speed, high, speed)
16	E01	Motor drive	
17	E02	Motor drive	
18	E03		Not used for this set.
19	TST	Test	Normally used at "L" level to test the discrete unit of micro computer.
20	RST	Reset input terminal	Turn this terminal to "L" level, then the micro computer is reset.
21	SNS0	Sensor	This is connected to ground for use.
22	SNS1	Sensor	The input from the photo sensor is given as a pulse.
23	D00	LED drive	The output terminal to generate the inflared ray, LED
24	D01	LED drive	
25	D02	LED drive	
26	D03		Not used for this set
27	V_{DD}	Power input terminal	V_{DD} voltage is applied. (Standard +5V)
28	OSC	Oscillator input terminal	The combination of a resistor and a capacitor as the terminal to generate clock signal, and the required clock is obtained by the oscillation circuit which contains LSI.

www.vinylengine.com

■ BLOCK DIAGRAM (Peiphery micro computer)

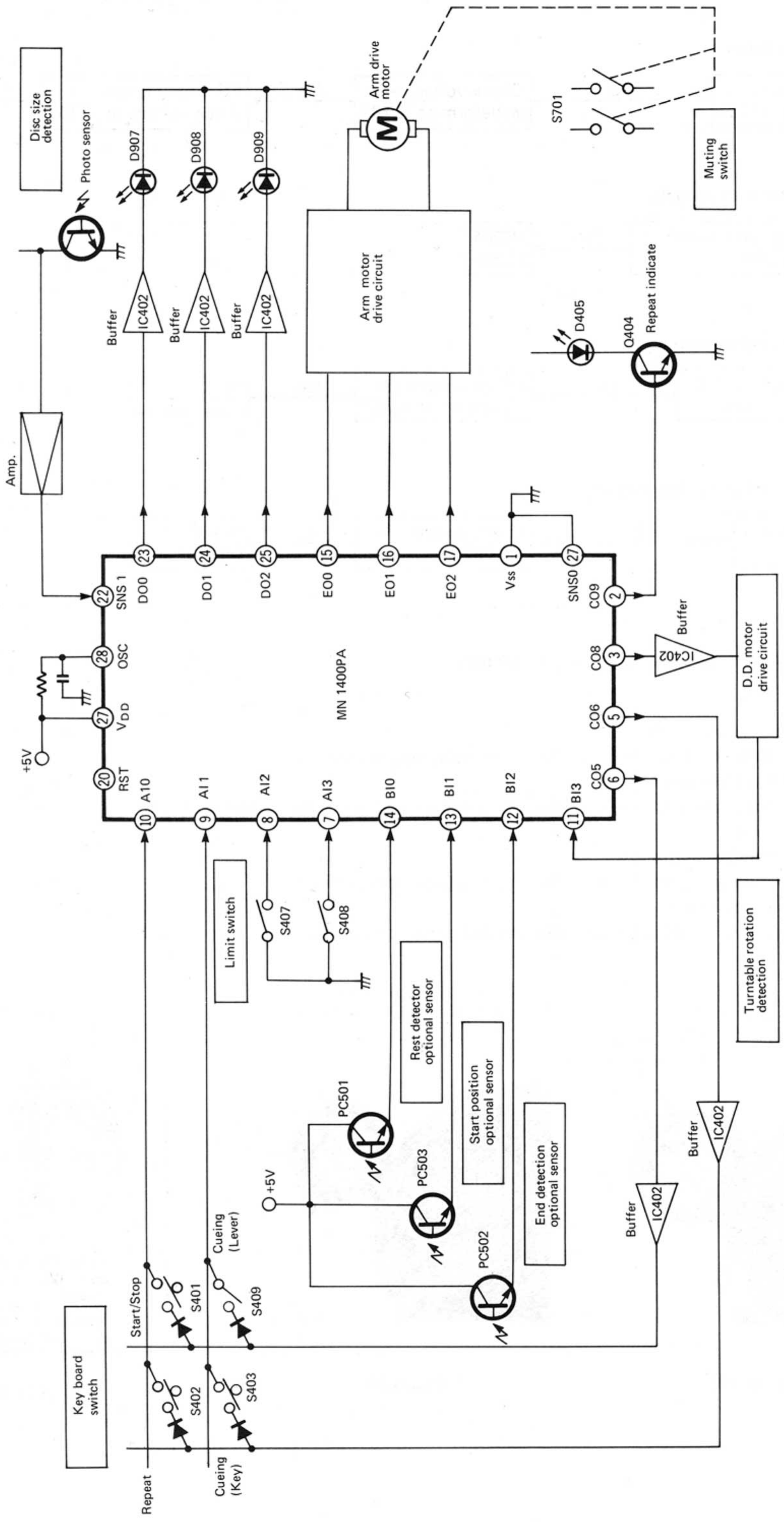

■ BLOCK DIAGRAM

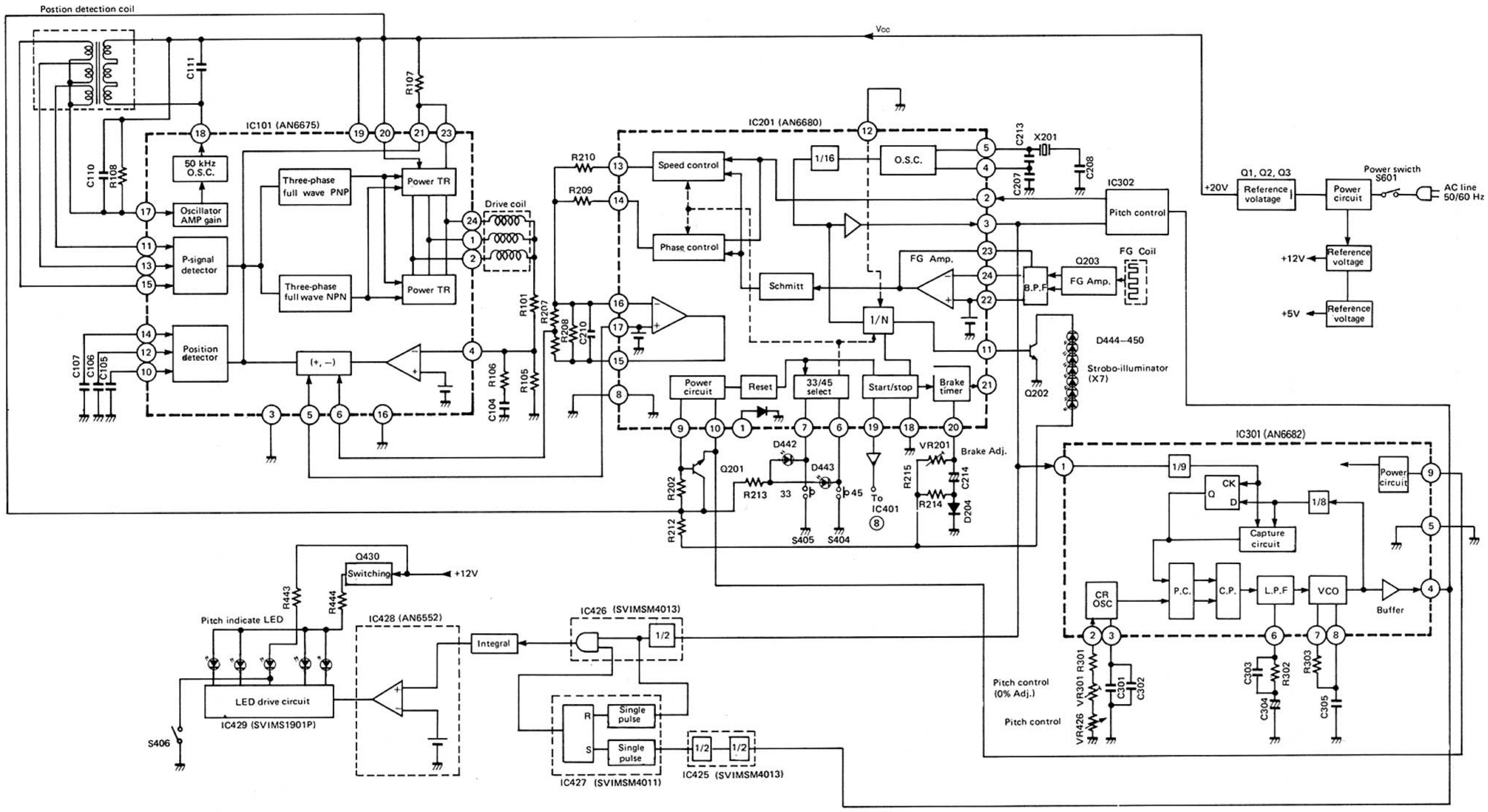

www.vinylengine.com

■ REPLACEMENT PARTS LIST (Electric Parts)

Notes: 1. Part numbers are indicated on most mechanical parts.
Please use this part number for parts orders.
2. ⚠ indicates that only parts specified by the manufacture be used for safety.

Ref. No.		Part No.	Part Name & Description
IC			
IC1		SVIUPC14312	Integrated Circuit (Reference Voltage)
IC2		SVIFS7805C	Integrated Circuit (Reference Voltage)
IC101		AN6675	Integrated Circuit (Drive)
IC201		AN6680	Integrated Circuit (Control)
IC301		AN6682	Integrated Circuit (Control)
IC302, 427		SVIMSM4011	Integrated Circuit (CMOS)
IC401		MN1400PA	Integrated Circuit (Micro Computer)
IC402		SVIM53217P	Integrated Circuit (Buffer)
IC425, 426		SVIMSM4013	Integrated Circuit (CMOS)
IC428		AN6552	Integrated Circuit
IC429		SVIMS1901P	Integrated Circuit
TRANSISTORS			
Q1		**2SD389A-Q**	Transistor
Q2, 3, 102, 202		2SD637	Transistor
Q101		2SB641	Transistor
Q201		2SC1846-R	Transistor
Q203		**2SC1328-T**	Transistor
Q401 ~ 406, 425, 426,428, 429		2SD636	Transistor
Q427		2SC1047-C	Transistor
Q430		2SB641	Transistor
Q901, 902		2SD638	Transistor
Q903, 904, 907, 908, 909		2SB643	Transistor
Q905, 906 910 ~ 914		2SD636	Transistor
DIODES			
D1, 3	⚠	**SVDS1RBA20Z**	Rectifier
D2, 301		**MA1051**	Diode, 5V Zener
D101		**20A90**	Diode
D102, 204		**MA162A**	Diode
D401 ~ 404 425, 427, 428, 451		**MA162A**	Diode
D405, 429~434, 436 ~ 441, 442, 443		SVDGL-9PR2	Light Emitting Diode
D426		**MA26TO-A**	Diode
D435		SVDGL-9NG2	Light Emitting Diode
D444 ~ 450		SVDGD4205A/LC	Light Emitting Diode
D901 ~ 906		**MA162A**	Diode
D907 ~ 909		SVDGL-520	Light Emitting Diode
CRYSTAL			
X201		SVQU306115	Crystal, 4.19328MHz Oscillator
POWER TRANSFORMER			
PT1	⚠	SLT60EU6B	Power Transformer
LAMP			
PL1		SFDN172-01	Lamp, Stylus-illuminator
FUSE			
F1	⚠	XBAS2A0305	Fuse, 350mA
F2	⚠	XBA2F06NU100	Fuse, 600mA
VARIABLE RESISTORS			
VR201		**EVLS3AA00B54**	Braking Adjustment, 50 kΩ (B)

Ref. No.		Part No.	Part Name & Description
VR301		EVMH1GA00B53	Pitch Control ±0% Adjustment, 5 kΩ (B)
VR425		**EVTS3MA00B52**	Pitch Control Frequency, 500Ω (B)
VR426 (S406)		EVHJXB001A24	Pitch Control, 20 kΩ (B)
SWITCHES			
S401 ~ 405		EVQP5R04K	Switch, Stop, 33rpm & 45rpm Selector
S407 ~ 408		SFDSD2MSC	Switch, Cueing Up-Down
S409		SFDSD2MSL13C	Switch, Cueing Lever
S601	⚠	SFDSSS5GL2	Switch, Power
S701		SFDSHSW0665B	Switch, Muting
S801		SFDSD2MSL-C	Switch, Stylus-illuminator
PHOTO INTERRUPTERS			
PC501		ON1128	Photo Interrupter
PC502, 503		ON1128SK	Photo Interrupter
RESISTORS			
R1		**ERD25FJ562**	Carbon, 5.6kΩ, 1/4W, ± 5%
R2		**ERD25FJ682**	Carbon, 6.8kΩ, 1/4W, ± 5%
R3		**ERD25FJ272**	Carbon, 2.7kΩ, 1/4W, ± 5%
R4,		**ERD25FJ471**	Carbon, 470Ω, 1/4W, ± 5%
R5		**ERD25FJ471**	Carbon, 470Ω, 1/4W, ± 5%
R101		**ERD25FJ103**	Carbon, 10kΩ, 1/4W, ± 5%
R102		**ERX1ANJ4R7**	Metal Film, 4.7kΩ, 1/4W, ± 5%
R103		**ERD25FJ472**	Carbon, 4.7kΩ, 1/4W, ± 5%
R104		**ERD25TJ473**	Carbon, 47kΩ, 1/4W, ± 5%
R105		**ERD25FJ103**	Carbon, 10kΩ, 1/4W, ± 5%
R106		**ERD25FJ150**	Carbon, 15Ω, 1/4W, ± 5%
R107		**ERX1ANJ1R5**	Metal Film, 1.5Ω, 1/4W, ± 5%
R108		**ERD25FJ103**	Carbon, 10kΩ, 1/4W, ± 5%
R109, 110		**ERX1ANJ4R7**	Metal Film, 4.7Ω, 1/4W, ± 5%
R111		**ERD25TJ473**	Carbon, 47kΩ, 1/4W, ± 5%
R112		**ERD25FJ222**	Carbon, 120kΩ, 1/4W, ± 5%
R113		**ERD25TJ153**	Carbon, 15kΩ, 1/4W, ± 5%
R201		**ERG1ANJ561**	Metal Oxide, 560Ω, 1/4W, ± 5%
R202		**ERD25FJ103**	Carbon, 10kΩ, 1/4W, ± 5%
R203		**ERD25FJ470**	Carbon, 47Ω, 1/4W, ± 5%
R204		**ERD25FJ272**	Carbon, 2.7kΩ, 1/4W, ± 5%
R205		**ERD25TJ124**	Carbon, 120kΩ, 1/4W, ± 5%
R206		**ERD25TJ183**	Carbon, 18kΩ, 1/4W, ± 5%
R207		**ERD25TJ563**	Carbon, 56kΩ, 1/4W, ± 5%
R208		**ERD25TJ224**	Carbon, 220kΩ, 1/4W, ± 5%
R209		**ERD25TJ154**	Carbon, 150kΩ, 1/4W, ± 5%
R210		**ERD25TJ183**	Carbon, 18kΩ, 1/4W, ± 5%
R211		**ERD25FJ103**	Carbon, 10kΩ, 1/4W, ± 5%
R212		**ERD25FJ121**	Carbon, 120Ω, 1/4W, ± 5%
R213		**ERD25FJ122**	Carbon, 1.2kΩ, 1/4W, ± 5%
R214		**ERD25TJ223**	Carbon, 22kΩ, 1/4W, ± 5%
R215		**ERD25FJ472**	Carbon, 4.7kΩ, 1/4W, ± 5%
R216		**ERD25TJ154**	Carbon, 150kΩ, 1/4W, ± 5%
R217		**ERD25TJ223**	Carbon, 22kΩ, 1/4W, ± 5%
R218		**ERD25FJ102**	Carbon, 1kΩ, 1/4W, ± 5%
R219		**ERD25FJ332**	Carbon, 3.3kΩ, 1/4W, ± 5%
R220		**ERD25FJ221**	Carbon, 220Ω, 1/4W, ± 5%
R221		**ERD25FJ471**	Carbon, 470Ω, 1/4W, ± 5%
R222		**ERD25FJ391**	Carbon, 390Ω, 1/4W, ± 5%
R301		ERO25CKF3301	Metal Film, 3.3kΩ, 1/4W, ± 5%
R302		**ERD25FJ471**	Carbon, 470Ω, 1/4W, ± 5%
R303		**ERD25FJ822**	Carbon, 8.2kΩ, 1/4W, ± 5%
R304		**ERD25FJ152**	Carbon, 1.5kΩ, 1/4W, ± 5%
R306		**ERD25TJ223**	Carbon, 22kΩ, 1/4W, ± 5%
R307		**ERD25FJ392**	Carbon, 3.9kΩ, 1/4W, ± 5%
R308		**ERD25TJ473**	Carbon, 47kΩ, 1/4W, ± 5%
R309		**ERD25TJ223**	Carbon, 22kΩ, 1/4W, ± 5%
R401		**ERD25FJ331**	Carbon, 330Ω, 1/4W, ± 5%
R402		**ERD25TJ223**	Carbon, 22kΩ, 1/4W ± 5%

www.vinylengine.com

Ref. No.		Part No.	Part Name & Description			
R403, 404		**ERD25FJ102**	Carbon,	1kΩ,	1/4W,	± 5%
R405, 406		**ERD25FJ222**	Carbon,	2.2kΩ,	1/4W,	± 5%
R407, 408		**ERD25FJ472**	Carbon,	4.7kΩ,	1/4W,	± 5%
R409		**ERD25FJ472**	Carbon,	4.7kΩ,	1/4W,	± 5%
R410, 411		**ERD25TJ104**	Carbon,	100kΩ,	1/4W,	± 5%
R412		**ERD25TJ473**	Carbon,	47kΩ,	1/4W,	± 5%
R413		**ERD25FJ102**	Carbon,	1kΩ,	1/4W,	± 5%
R414		**ERD25FJ472**	Carbon,	4.7kΩ,	1/4W,	± 5%
R415, 416		**ERD25TJ223**	Carbon,	22kΩ,	1/4W,	± 5%
R417		**ERD25TJ223**	Carbon,	22kΩ,	1/4W,	± 5%
R418		**ERD25TJ183**	Carbon,	18kΩ,	1/4W,	± 5%
R419		**ERD25TJ123**	Carbon,	12kΩ,	1/4W,	± 5%
R420		**ERD25FJ102**	Carbon,	1kΩ,	1/4W,	± 5%
R421		**ERD25FJ222**	Carbon,	2.2kΩ,	1/4W,	± 5%
R422		**ERD25FJ150**	Carbon,	15Ω,	1/4W,	± 5%
R426, 427		**ERD25FJ103**	Carbon,	10kΩ,	1/4W,	± 5%
R428		**ERD25FJ103**	Carbon,	10kΩ,	1/4W,	± 5%
R430		**ERD25TJ223**	Carbon,	22kΩ,	1/4W,	± 5%
R431		**ERD25FJ103**	Carbon,	10kΩ,	1/4W,	± 5%
R432		**ERD25FJ103**	Carbon,	10kΩ,	1/4W,	± 5%
R433		**ERD25TJ223**	Carbon,	22kΩ,	1/4W,	± 5%
R434		**ERD25TJ473**	Carbon,	47kΩ,	1/4W,	± 5%
R435		**ERD25FJ102**	Carbon,	1kΩ,	1/4W,	± 5%
R436		**ERD25TJ104**	Carbon,	100kΩ,	1/4W,	± 5%
R437		**ERD25FJ152**	Carbon,	1.5kΩ,	1/4W,	± 5%
R438		**ERD25FJ562**	Carbon,	5.6kΩ,	1/4W,	± 5%
R439		ERO25CKF1802	Metal Film,	18kΩ,	1/4W,	± 2%
R440		ERO25CKF4303	Metal Film,	430kΩ,	1/4W,	± 2%
R441		**ERD25FJ103**	Carbon,	10kΩ,	1/4W,	± 5%
R442		**ERD25FJ471**	Carbon,	470Ω,	1/4W,	± 5%
R443		**ERD25FJ101**	Carbon,	100Ω,	1/4W,	± 5%
R444		**ERD25FJ681**	Carbon,	680Ω,	1/4W,	± 5%
R445		**ERD25FJ102**	Carbon,	1kΩ,	1/4W,	± 5%
R446		**ERD25FJ222**	Carbon,	2.2kΩ,	1/4W,	± 5%
R447		**ERD25TJ123**	Carbon,	12kΩ,	1/4W,	± 5%
R448		**ERD25FJ103**	Carbon,	10kΩ,	1/4W,	± 5%
R449		**ERD25FJ152**	Carbon,	1.5kΩ,	1/4W,	± 5%
R450		**ERD25FJ821**	Carbon,	820Ω,	1/4W,	± 5%
R451		**ERD25TJ473**	Carbon,	47kΩ,	1/4W,	± 5%
R455		**ERD25FJ561**	Carbon,	560Ω,	1/4W,	± 5%
R601	⚠	**ERD50FJ4R7**	Carbon,	4.7Ω,	1W,	± 5%
R901, 902		**ERD25FJ102**	Carbon,	1kΩ,	1/4W,	± 5%
R903, 904		**ERD25FJ471**	Carbon,	470Ω,	1/4W,	± 5%
R905, 906		**ERD25FJ332**	Carbon,	3.3kΩ,	1/4W,	± 5%
R907, 908		**ERD25FJ222**	Carbon,	2.2kΩ,	1/4W,	± 5%
R909, 910		**ERD25FJ332**	Carbon,	3.3kΩ,	1/4W,	± 5%
R911		**ERG1ANJ150**	Metal Oxide,	15Ω,	1W,	± 5%
R912, 913		**ERD25FJ102**	Carbon,	1kΩ,	1/4W,	± 5%
R914		**ERG1ANJ150**	Metal Oxide,	15kΩ,	1W,	± 5%
R915, 916		**ERD25FJ102**	Carbon,	1kΩ,	1/4W,	± 5%
R917		**ERG1ANJ150**	Metal Oxide,	15Ω,	1W,	± 5%
R918, 919		**ERD25FJ102**	Carbon,	1kΩ,	1/4W,	± 5%
R920		**ERD25FJ331**	Carbon,	330Ω,	1/4W,	± 5%
R921		**ERD25FJ101**	Carbon,	100Ω,	1/4W,	± 5%
R922		**ERD25FJ471**	Carbon,	470Ω,	1/4W,	± 5%
R923		**ERD25TJ474**	Carbon,	470kΩ,	1/4W,	± 5%
R924		**ERD25FJ332**	Carbon,	3.3kΩ,	1/4W,	± 5%
R925		**ERD25TJ474**	Carbon,	470kΩ,	1/4W,	± 5%
R926		**ERD25FJ102**	Carbon,	1kΩ,	1/4W,	± 5%
R927		**ERD25FJ103**	Carbon,	10kΩ,	1/4W,	± 5%
R928		**ERD25FJ472**	Carbon,	4.7kΩ,	1/4W,	± 5%
R929		**ERD25FJ103**	Carbon,	10kΩ,	1/4W,	± 5%
R930		**ERD25FJ472**	Carbon,	4.7kΩ,	1/4W,	± 5%
R931, 932		**ERD25FJ103**	Carbon,	10kΩ,	1/4W,	± 5%
CAPACITORS						
C1		**ECEB1HS471**	Electrolytic,	470μF,	50V	
C2		**ECEA1VS330**	Electrolytic,	33μF,	35V	
C3		**ECEA1ES220**	Electrolytic,	22μF,	35V	

Ref. No.		Part No.	Part Name & Description			
C4, 5		**ECEB1VS331**	Electrolytic,	330μF,	35V	
C6		ECQM1H104KZ	Polyester,	0.1μF,	50V,	±10%
C7		**ECEA1CS221**	Electrolytic,	220μF,	16V	
C8		**ECEA0JS471**	Electrolytic,	470μF,	6.3V	
C9		ECQM1H104KZ	Polyester,	0.1μF,	50V,	±10%
C101, 102		**ECEA1VS330**	Electrolytic,	33μF,	35V	
C103		**ECEA1VS330**	Electrolytic,	33μF,	35V	
C104, 105		ECQM1H104KZ	Polyester,	0.1μF,	50V,	±10%
C106, 107		ECQM1H104KZ	Polyester,	0.1μF,	50V,	±10%
C108		**ECEA1ES101**	Electrolytic,	100μF,	25V	
C109, 110		ECQM1H104KZ	Polyester,	0.1μF,	50V,	±10%
C111		ECQM1H562KZ	Polyester,	0.0056μF,	50V,	±10%
C112		**ECEA1JS4R7**	Electrolytic,	4.7μF,	63V	
C201		**ECEA1CS330**	Electrolytic,	33μF,	16V	
C202, 203		**ECEA50Z1**	Electrolytic,	1μF,	50V	
C204		ECQM1H473KZ	Polyester,	0.047μF,	50V,	±10%
C205		**ECEA1AS221**	Electrolytic,	220μF,	10V	
C206		**ECEA50Z1**	Electrolytic,	1μF,	50V	
C207		ECCD1H101K	Ceramic,	100pF,	50V,	±10%
C208		ECCD1H390K	Ceramic,	39pF,	50V,	±10%
C209		**ECEA1ES101**	Electrolytic,	100μF,	25V	
C210		ECQM1H224KZ	Polyester,	0.22μF,	50V,	±10%
C211		ECQM1H473KZ	Polyester,	0.047μF,	50V,	±10%
C212		**ECEA50Z3R3**	Electrolytic,	3.3μF,	50V	
C213		ECCD1H471K	Ceramic,	470pF,	50V,	±10%
C214		**ECEA1ES101**	Electrolytic,	100μF,	25V	
C215		**ECEA50Z1**	Electrolytic,	1μF,	50V	
C216		**ECEA1ES470**	Electrolytic,	47μF,	25V	
C217		ECKD1H104ZFZ	Ceramic,	0.1μF,	50V	+80% −20%
C301, 302		ECQK1123FZ	Polyester,	0.012μF,	125V,	±1%
C303		**ECEA50Z1**	Electrolytic,	1μF,	50V	
C304		**ECEA1HS100**	Electrolytic,	10μF,	50V	
C305		ECQM1H222KZ	Polyester,	0.0012μF,	50V,	±10%
C306		**ECEA50Z1**	Electrolytic,	1μF,	50V	
C401		**ECEA1CS330**	Electrolytic,	33μF,	16V	
C402		ECKD1H104ZF	Ceramic,	0.1μF,	50V,	+80% −20%
C403		ECCD1H101K	Ceramic,	100pF,	50V,	±10%
C436		ECKD1H473ZF	Ceramic,	0.047μF,	50V,	±10%
C437		ECKD1H223ZF	Ceramic,	0.022μF,	50V,	+80% −20%
C438		ECKD1H473ZF	Ceramic,	0.047μF,	50V,	±10%
C425, 426		ECCD1H101K	Ceramic,	100pF,	50V,	±10%
C427, 428		ECCD1H101K	Ceramic,	100pF,	50V,	±10%
C429, 430		ECQM1H473KZ	Polyester,	0.047μF,	50V,	±10%
C431		**ECEA1HS100**	Electrolytic,	10μF,	50V	
C433, 434		ECKD1H104ZFZ	Ceramic,	0.1μF,	50V,	+80% −20%
C435		ECKD1H104ZFZ	Ceramic,	0.1μF,	50V,	+80% −20%
C601 [M]	⚠	ECQF1A473MD	Polypropylene,	0.047μF,	100V,	±20%
C601 [MC]	⚠	ECQU1A473MD	Polyester,	0.047μF,	125V,	±20%
C901, 902		ECQM1H103KZ	Polyester,	0.01μF,	50V,	±10%
C903		ECQM1H104KZ	Polyester,	0.1μF,	50V,	±10%
C904		**ECEA1CS221**	Electrolytic,	220μF,	16V,	
C905		ECKD1H104ZF	Ceramic,	0.1μF,	125V,	+80% −20%
C906		ECSF16E10ZB	Tantalum,	10μF,	16V	
C907, 909		ECQM1H102KZ	Polyester,	0.01μF,	50V,	±10%
C908		ECKD1H102KB	Ceramic,	0.001μF,	50V,	±10%
C910		**ECEA1HS100**	Electrolytic,	10μF,	50V	
C911, 912		ECKD1H104ZFZ	Ceramic,	0.1μF,	50V,	±10%
C913		ECKD1H104ZFZ	Ceramic,	0.1μF,	50V,	±10%
C914, 915		ECKD1H102KB	Ceramic,	0.001μF,	50V,	±10%

www.vinylengine.com

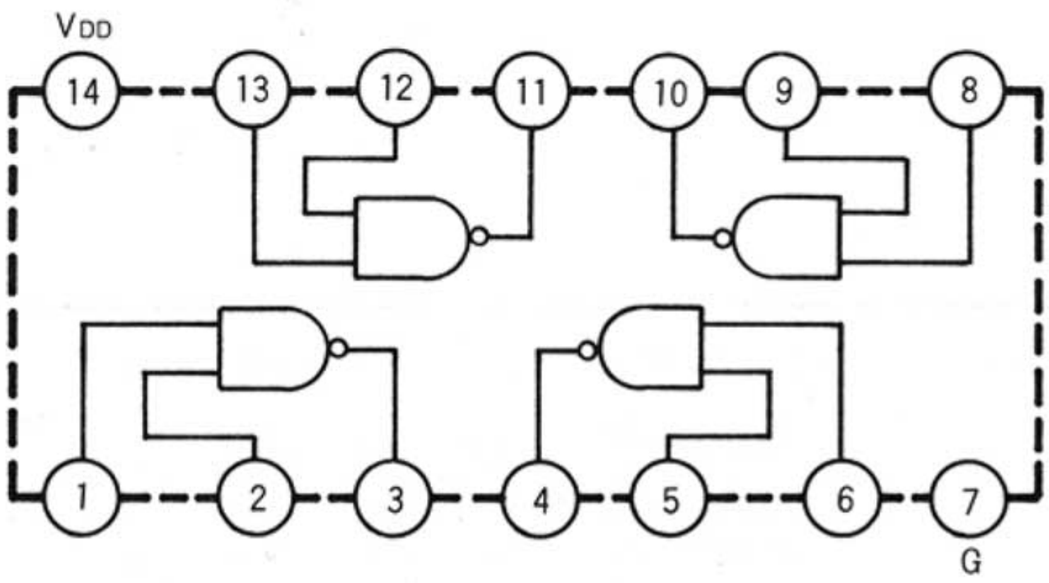

IC302, 427 (SVIMSM4011)

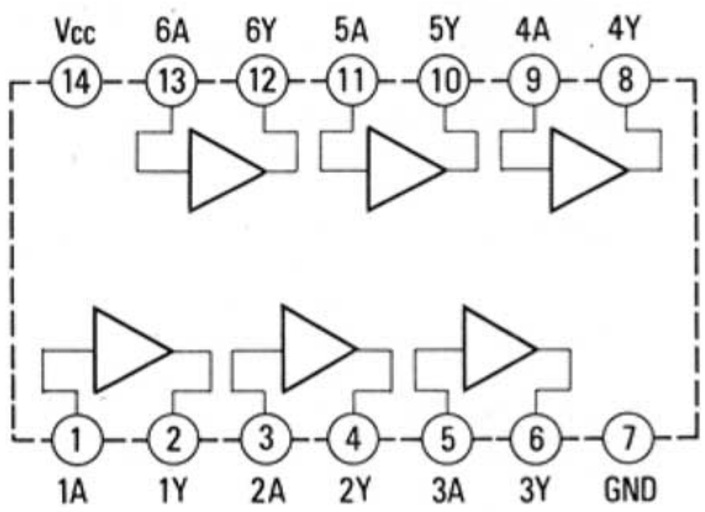

IC402 (SVIM53217P)

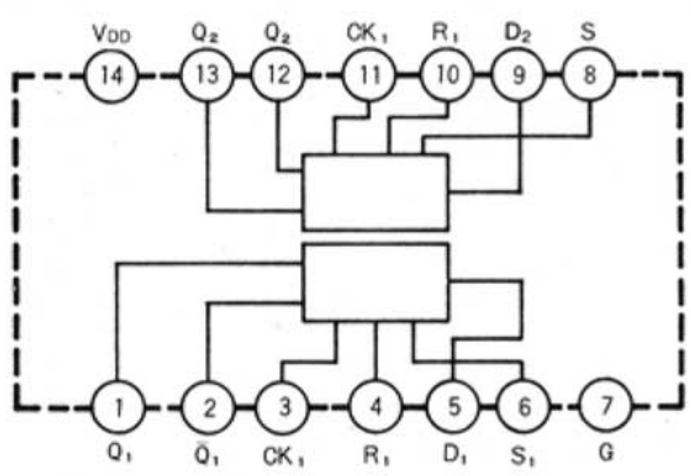

IC425, 426 (SVIMSM4013)

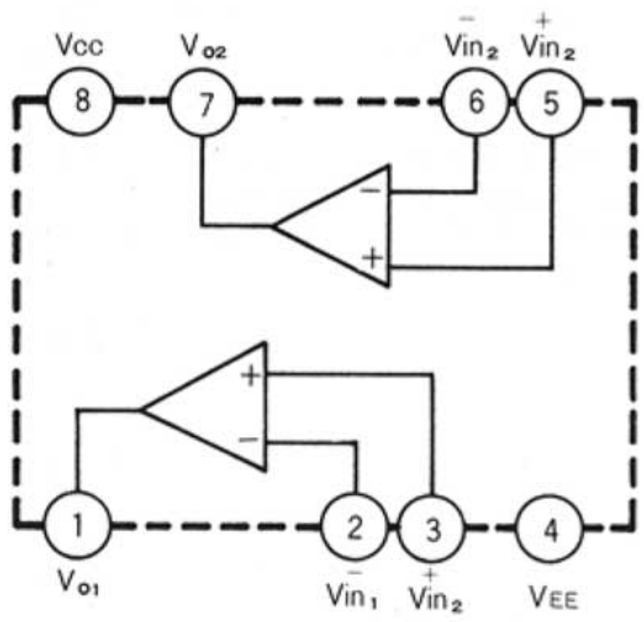

IC428 (AN6552)

NOTES:

1. **S401:** Stop switch in **"OFF"** position. (not-push condition)
2. **S402:** Repeat switch in **"OFF"** position. (not-push condition)
3. **S403:** Cueing key switch in **"OFF"** position. (not-push condition)
4. **S404:** Speed selector switch (33r.p.m.) in **"OFF"** position. (not-push condition)
5. **S405:** Speed selector switch (45r.p.m.) in **"OFF"** position. (not-push condition)
6. **S406:** Pitch control switch in **"ON"** position. (center position).
7. **S407:** Cueing-up detector switch in **"ON"** position. (Arm Lift-down position)
8. **S408:** Cueing-down detector switch in **"ON"** position. (Arm Lift-down position)
9. **S409:** Cueing Lever Switch in **"OFF"** position.
10. **S601:** Power switch in **"ON"** position.
11. **S701:** Muting switch in **"OFF"** position.
12. **S801:** Stylus-illuminator switch in **"OFF"** position.
13. ▭ Indicated voltage values are the voltage when the arm lift is at a stop in the lowest position.
14. Indicated voltage values are the standard values for the unit measured by the DC electronic circuit tester (high impedance) with the chassis taken as standard. Therefore, there may exist some errors in the voltage values, depending on the internal impedance of the DC circuit tester.
15. This schematic diagram may be modified at any time with the developent of new technology.

IMPORTANT SAFETY NOTICE

THE SHADED AREA ON THIS SCHEMATIC DIAGRAM INCORPORATES SPECIAL FEATURES IMPORTANT FOR SAFETY.
WHEN SERVICING IT IS ESSENTIAL THAT ONLY MANUFACTUR'S SPECIFIED PARTS BE USED FOR THE CRITICAL COMPONENTS IN THE SHADED AREAS OF THE SCHEMATIC.

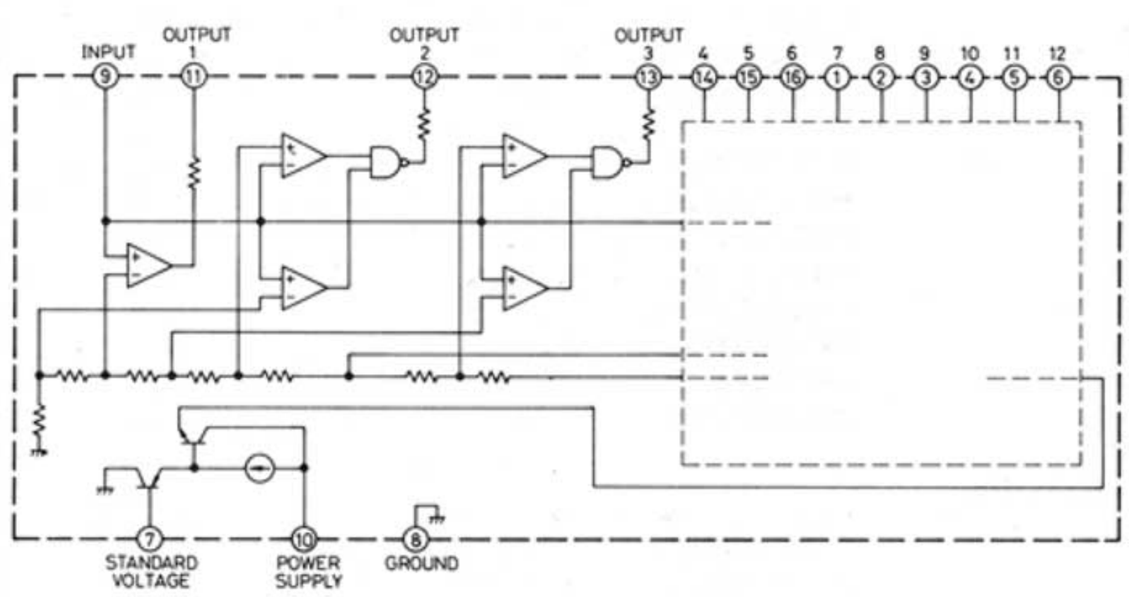

IC429 (SVIMS1901P)

www.vinylengine.com

■ SCHEMATIC DIAGRAM (Drive Circuit Board)

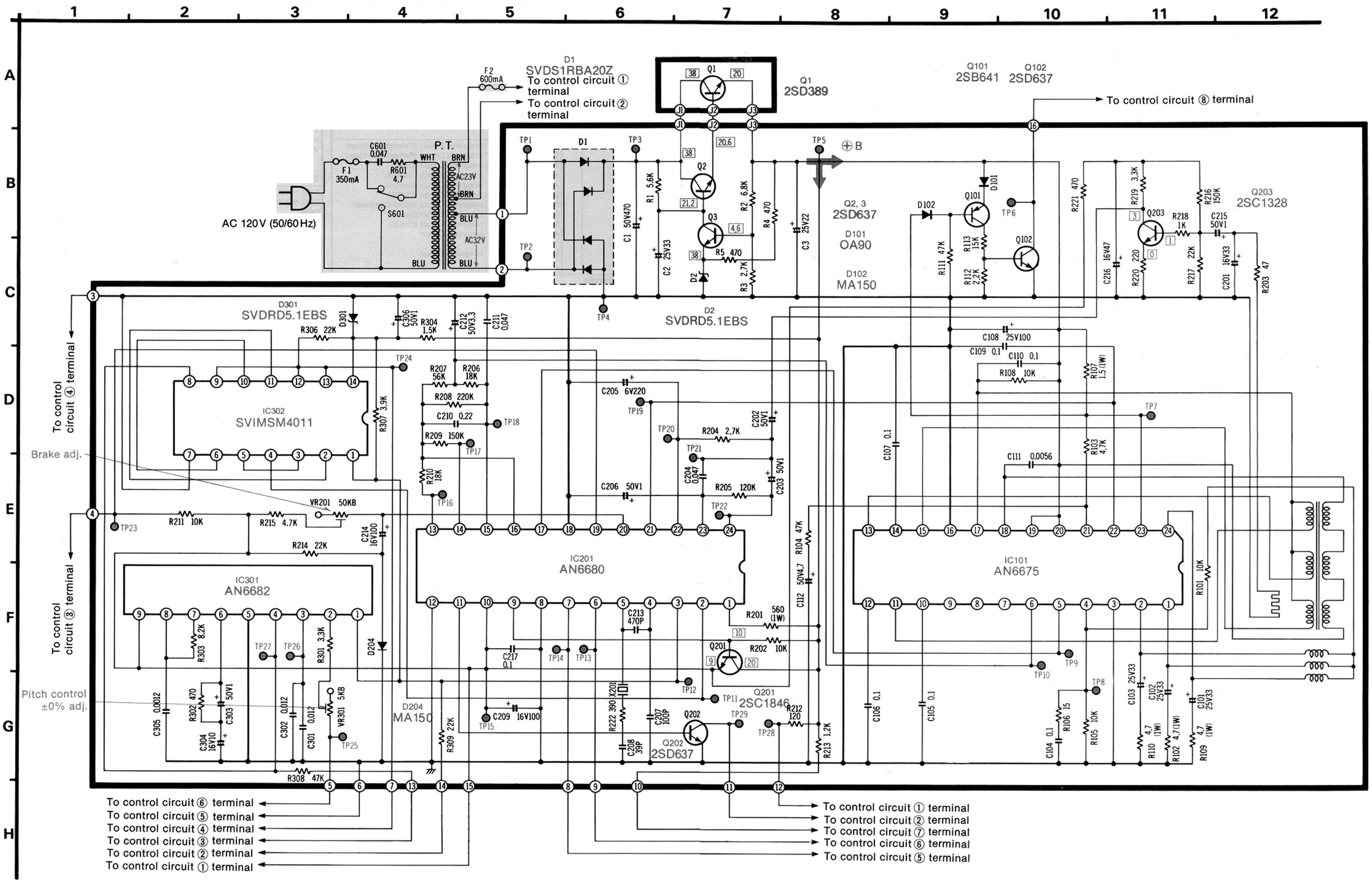

■ REFERENCE VOLTAGE AND WAVEFORM AT EACH IC

IC101 (AN6675)

	Start	Stop		Start	Stop		Start	Stop
①	10V	1.7V	⑫	15V	15V	⑱	Same as at right	20μs 16V 20V
②	10V	1.7V						
③	0V	0V						
④	5V	1.7V	⑬	15V	20μs 15V			
⑤	5V	5V				⑲	20V	20V
⑥	5V	6.6V				⑳	20V	20V
⑦	0V	0V	⑭	15V	15V	㉑	20V	20V
⑧	5V	5V	⑮	15V	20μs 20μs	㉒	1.4V	0V
⑨	0V	0V				㉓	20V	20V
⑩	15V	15V				㉔	10V	1.7V
			⑯	0V	0V			
⑪	15V	15V	⑰	15V	15V			

IC201 (AN6680)

	Start	Stop		Start	Stop		Start	Stop
①	2.5V	2.5V	⑧	0V	0V	⑯	5V	2.5V
②	Same as at right	4μs 5V	⑨	10V	10V	⑰	5V	5V
			⑩	9V	9V	⑱	0V	0V
			⑪	Same as at right	10ms 0.8V	⑲	7V	0.14V
③	Same as at right	4μs 3V				⑳	0.4V	5.8V
						㉑	1.5V	0.2V
			⑫	0V	0V	㉒	3V	3V
④	Same as at right	0.24μs 5V	⑬	5V	0.2V	㉓	1V 20ms 3V	3V
⑤	Same as at right	0.24μs 6V	⑭	20ms 5V	20ms 2.5V	㉔	2.8V	2.8V
⑥	3.4V	3.4V	⑮	5V 5.5V	8V			
⑦	0V	0V						

IC301 (AN6682)

	Start	Stop		Start	Stop		Start	Stop
①	Same as at right	4μs 3V	④	Same as at right	4μs 4.8V	⑧	Same as at right	0.4V 1.8V
②	Same as at right	2V	⑤	0V	0V	⑨	9V	9V
			⑥	3.9V	3.9V			
③	Same as at right	0.2ms 1V 2.8V	⑦	Same as at right	4μs 7V			

www.vinylengine.com

IC302 (SVIMSM4011)

	Start	Stop		Start	Stop		Start	Stop
①	Same as at right		⑤	Same as at right	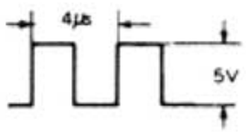	⑨	0.6V	0.6V
						⑩	5V	5V
						⑪	5V	5V
②	5V	5V	⑥	5V	5V	⑫	0.6V	0.6V
③	Same as at right	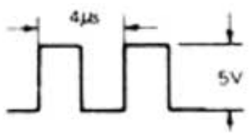	⑦	0V	0V	⑬	0.6V	0.6V
			⑧	Same as at right		⑭	5V	5V
④	5V	5V						

Q202 (2SD637)

	Start	Stop
E	0V	0V
C	Same as at right	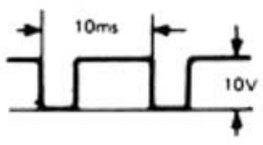
B	Same as at right	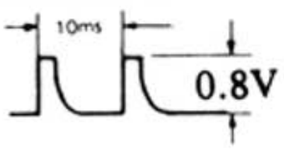

■ TERMINAL GUIDE OF TRANSISTOR AND IC

SVIμPC14312 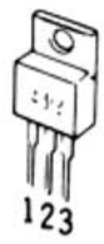	AN6675 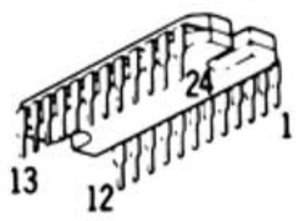	AN6680 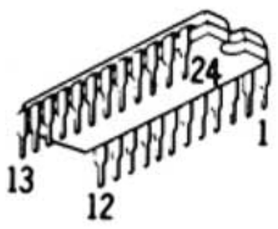
AN6682 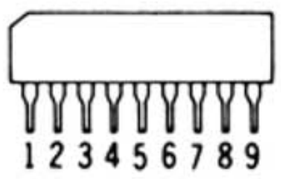	SVIMSM4011 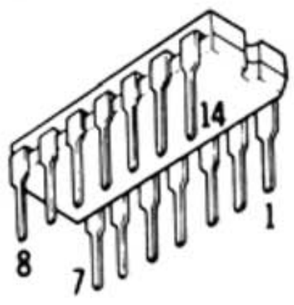	SVIMSM4013
AN6552	SVIMS1901P 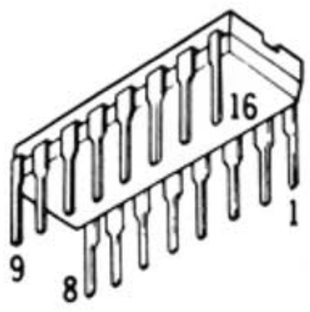	2SD389 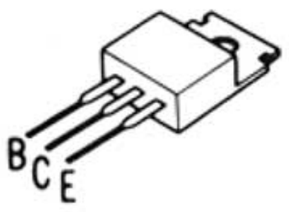
2SD637, 2SD638, 2SD636, 2SB641, 2SB643	2SC1846 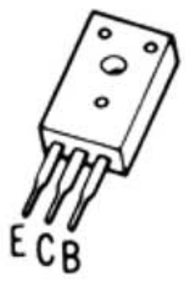	2SC1328, 2SC1047 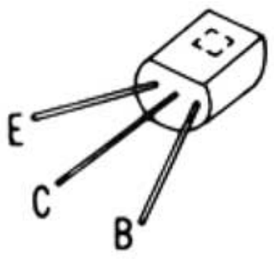
MN1400PA 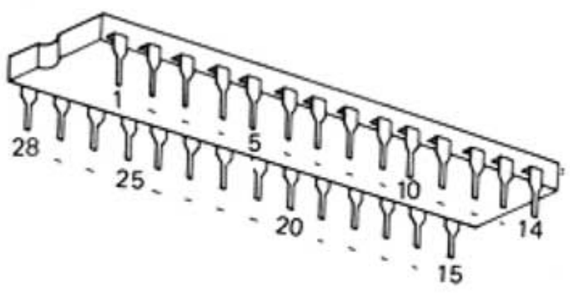		SVIFS7805C 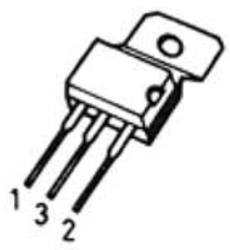

www.vinylengine.com

■ CONTROL and DRIVE CIRCUIT BOARD

Earth (Ground) Lines

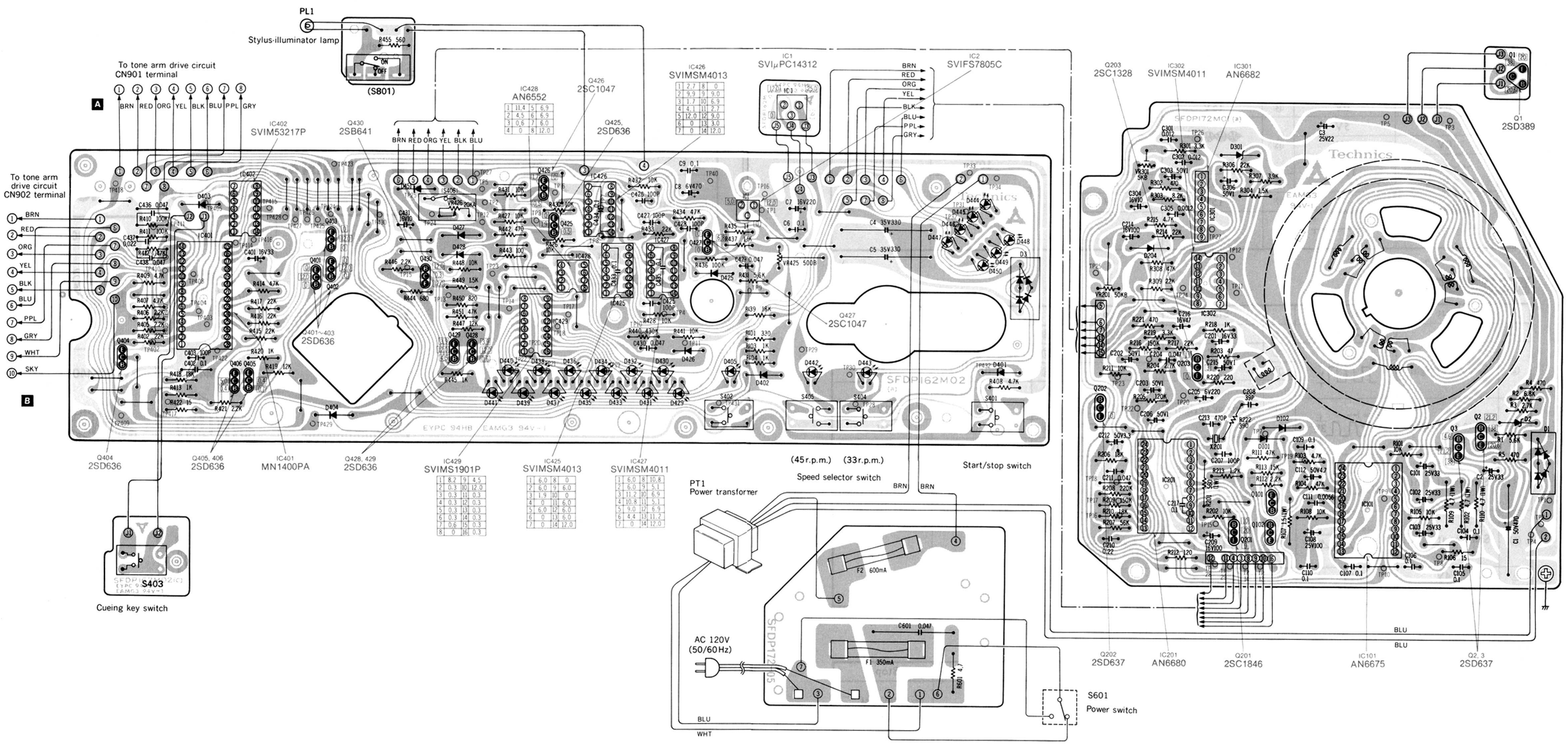

■ SCHEMATIC DIAGRAM (Control Circuit Board)

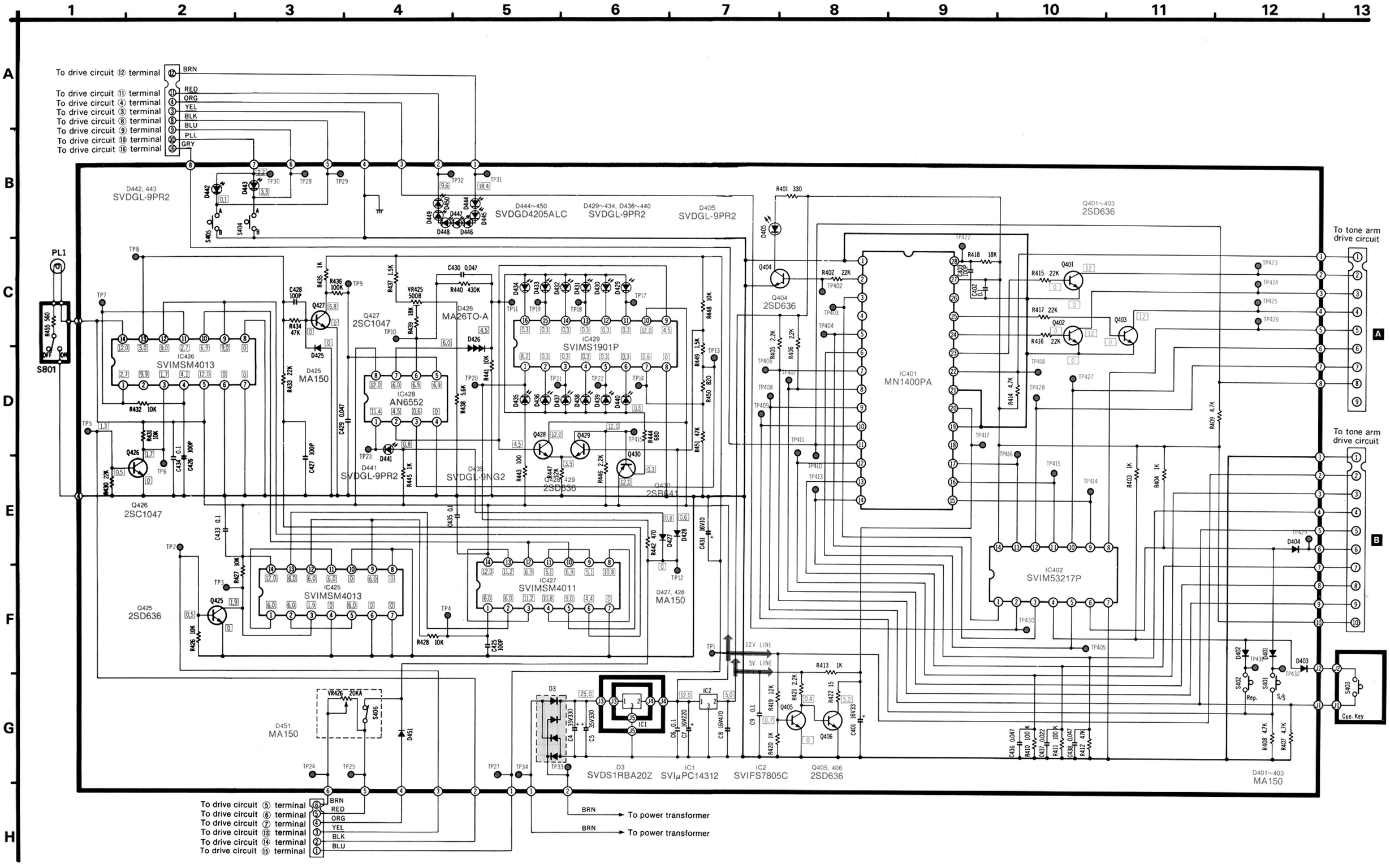

■ TONE ARM DRIVE CIRCUIT BOARD

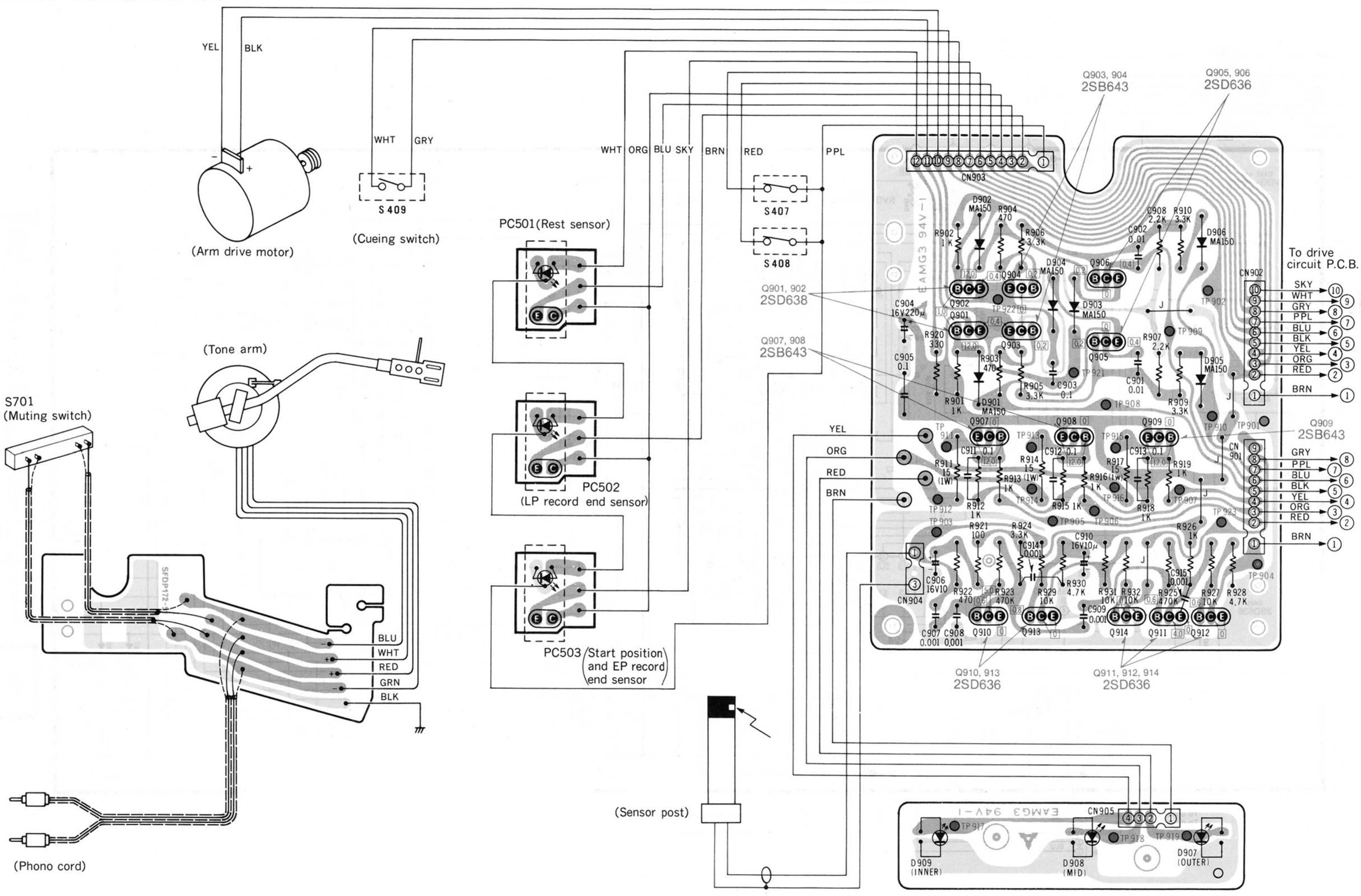

■ SCHEMATIC DIAGRAM (Tone Arm Drive Circuit Board)

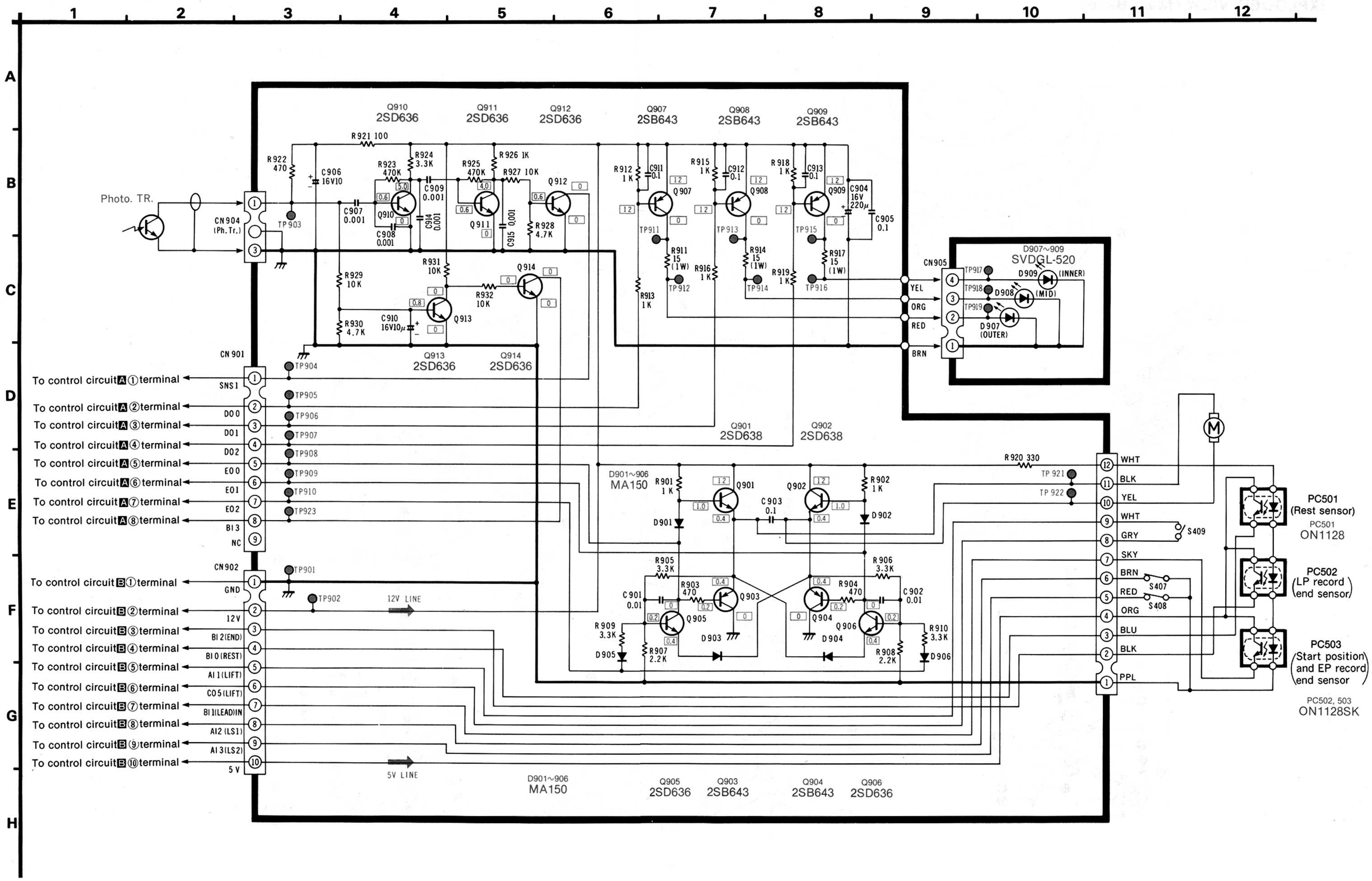

■ EXPLODED VIEW (Main Base)

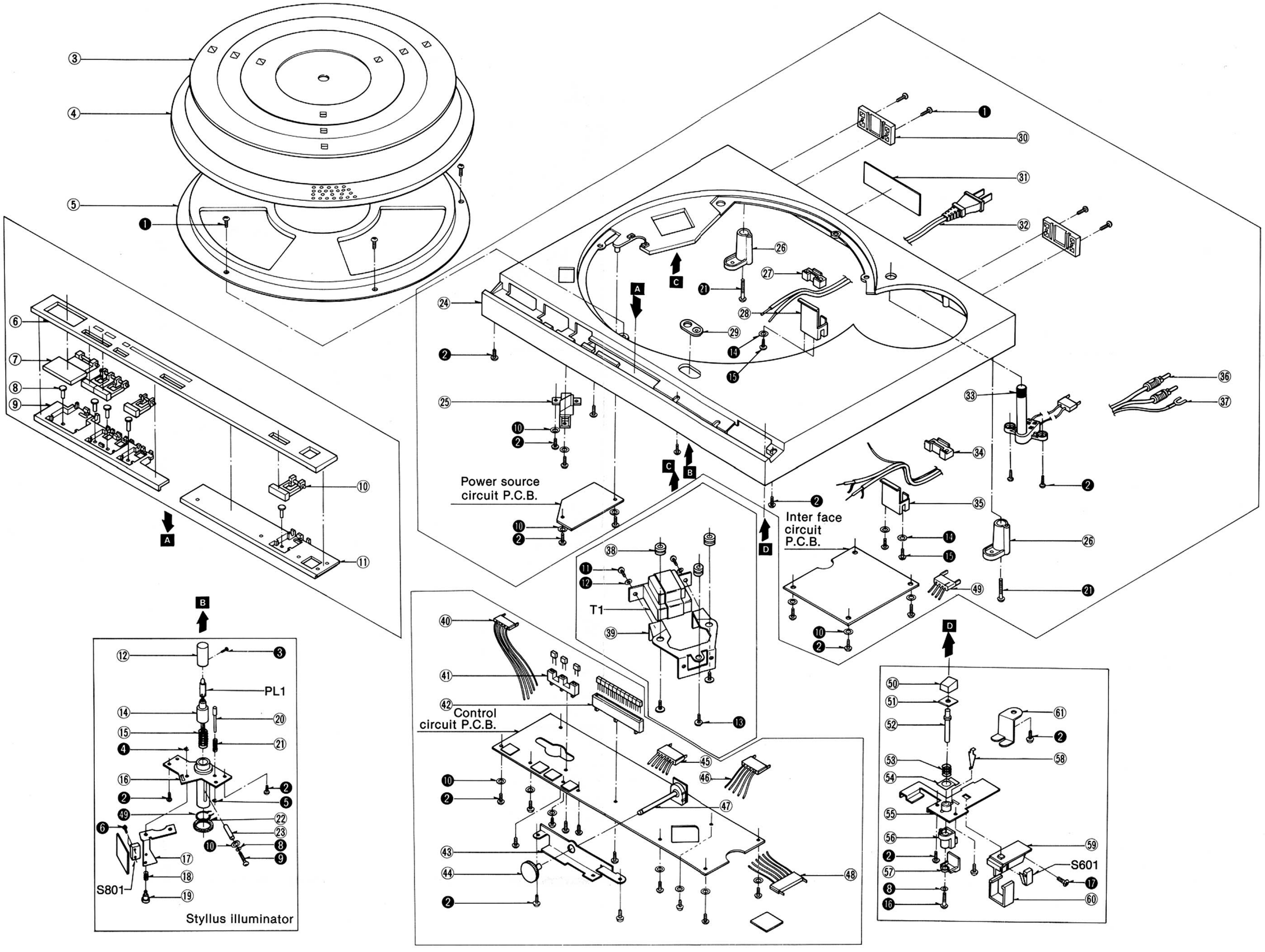

■ REPLACEMENT PARTS LIST (Main Base and Bottom Base Parts)

Notes: 1. Part numbers are indicated on most mechanical parts.
Please use this part number for parts orders.
2. ⚠ indicates that only parts specified by the manufacture be used for safety.

Ref. No.		Part No.	Part Name & Description
CABINET and CHASSIS PARTS			
1		SFAD172-01E	Dust Cover
2		SFAT172-01A	Hinge
3		SFTG162-01	Turntable Mat
4		SFTE162-01Z	Turntable
5		SFUM172-05	Cover, Turntable
6		SFUM162-01	Panel, Operation
7		SFKT162-01	Button, Start/Stop
8		SFUM172-11	Pin, Switch
9		SFUM172-03	Bracket (B), Operation Panel
10		SFKT172-03	Button, Speed Select, Cueing & Repeat
11		SFUM172-02	Bracket (A), Operation Panel
12		SFKK172-01	Cover, Lamp
13		SFDN172-01	Lamp
14		SFXB172-02	Boss, Drive
15		SFQA172-01	Spring, Drive Boss
16		SFUP172-01E	Plate Assembly, Stylus Illuminating Lamp
17		SFUP172-03	Plate, Lock Operation
18		SFQA001-02	Spring, Lock Operation Plate Pin
19		SFXJ172-05	Pin, Lock Operation Plate M'tg
20		SFXJ172-01	Pin, Lock Canceler
21		SFQA520-01	Spring, Lock Canceler Pin
23		S FXO172-01	Pin, Guide
24		SFAC162-01	Cabinet
25		SFUM130-01	Cover Neon
26		SFAZ172-01	Supporter, Insulator
27		SFUM170-06	Spacer, AC Cord
28		SFUM170-05	Clamper, AC Cord
29		SFUM172-04	Ornament, Stylus Illuminating Lamp
30		SFUM170-07	Case, Hinge Ass'y
31 [M]		SFNN162M01	Name Plate
31 [MC]		SFNN162C01	Name Plate
32	⚠	RJA9YA	AC Cord
33		SFUM162-03Z	Sensor Post
34		SFUM170-06	Spacer, Phono Cord
35		SFUM170-11	Clamper, Phono Cord
36		SFDH028-01	Phono Cord
37		SFEL028-01E	Ground Wire
38		SFGC132-01	Rubber, Power Transformer
39		SFUP132-03	Plate, Power Transformer
40		SFDJ162-01E	Connector, 8 Pin
41		SFUM172-10	Spacer (B), Speed Selector LED
42		SFUM172-09	Spacer (A), Speed Selector LED
43		SFUP172-06	Bracket, Pitch Control Plate
44		SFKT172-04	Knob, Pitch Control
45		SFDJ172-01E	Connector, 6 Pin
46		SFDJ162-02E	Connector, 9 Pin
47		SFDJ162-03E	Connector, 10 Pin
48		SFUP172-09	Bracket, Volume Shaft
50		SFKT172-01	Button, Power Switch
51		SFUZ172-03	Spacer, Power Switch Button
52		SFXJ172-03	Shaft, Power Switch Button
53		SFQA172-02	Spring, Power Switch
54		SFUP172-04	Supporter, Power Switch Plate
55		SFUP172-02E	Bracket, Power Switch M'tg Plate A'ssy

Ref. No.		Part No.	Part Name & Description
56		SFUM001-11	Cam, Power Siwtch
57		SFUM132-07	Cam, Power Switch
58		SFUP001-12	Bracket, Power Switch
59		SFUM132-05	Holder, Power Switch
60		SFUM132-06	Holder, Power Switch
61		SFUP172-12	Plate, Power Switch
62		SFMGQ20-01	Cover, Stater Frame Ass'y
63		SFMG520-31A	Stater Frame
64		SFMZ172-01E	FG Detector Coil Ass'y
65		SFMZQ20-01A	Shaft, Stater Frame Ass'y
66		SFUP172-05	Bracket, Stater Frame M'tg Plate
67		SFUM162-06	Supporter, LED
68		SFUM172-06	Insulator (A)
69		SFXW172-01	Washer
70		SFXW172-02	Washer
71		SFGA170-01	Insulator Rubber
72		SFQC170-01	Spring, Insulator
73		SFXG170-02E	Nut
74		SFUM172-01	Insulator Cup
75		SFGA172-01	Insulator (C)
76		SFUP132-01	Cover, Power Transformer
77		SFUM172-12	Spacer, Clamper
78		SFAU172-01	Cover, Bottom
79		SFUM172-13	Spacer, Tone Arm
80		SFUZ172-04	Rubber Cushion, Insulator
81		SFPRT17201K	Rest Ass'y
82		SFPKD17203	Arm Base
83		SFPKB17201S	Ring, Operation
84		SFPKD17201	Bracket, Arm Base
85		SFGK132-01	Cap, Rubber
86		SFPAB17206	Knob, Anti-skate Force Control
87		SFMH172-51E	Motor Assembly
88		SFGZ172-52	Cover, Motor Assembly
89		SFGB172-51	Belt
90		SFUP172-58	Bracket, Worm Assembly
91		SFUG172-53E	Worm Assembly
92		SFUP172-55	Bracket, Motor
93		SFXJ172-52	Shaft, Sub-Active Plate
94		SFUP162-51E	Sub-Active Plate
95		SFUK172-51E	Plate, Motor
96		SFQH172-51	Spring, Motor Plate
97		SFUP172-51A	Main Active Plate
98		SFUG162-52E	Gear Ass'y
99		SFUM172-61	Phono P.C.B
100		SFUP172-56	Plate, Shield
101		SFPCC31001K	Head Shell
102		SFPAM17201K	Tone Arm
103		SFPWG17201K	Balance weight
104		SFXG829-1	Screw
105		SFPRT17202K	Lift Assembly
106		SFQA829-03	Spring, Lift
107		SFPZB17202	Knob, Lock
108		SFPAB13202	Knob, Lift
109		SFPAB16201K	Tone Arm Ass'y
110		SFPJL16203E	Plate, Lift
111		SFPZB17203K	Plate, Condition

www.vinylengine.com

■ EXPLODED VIEW (Bottom Base)

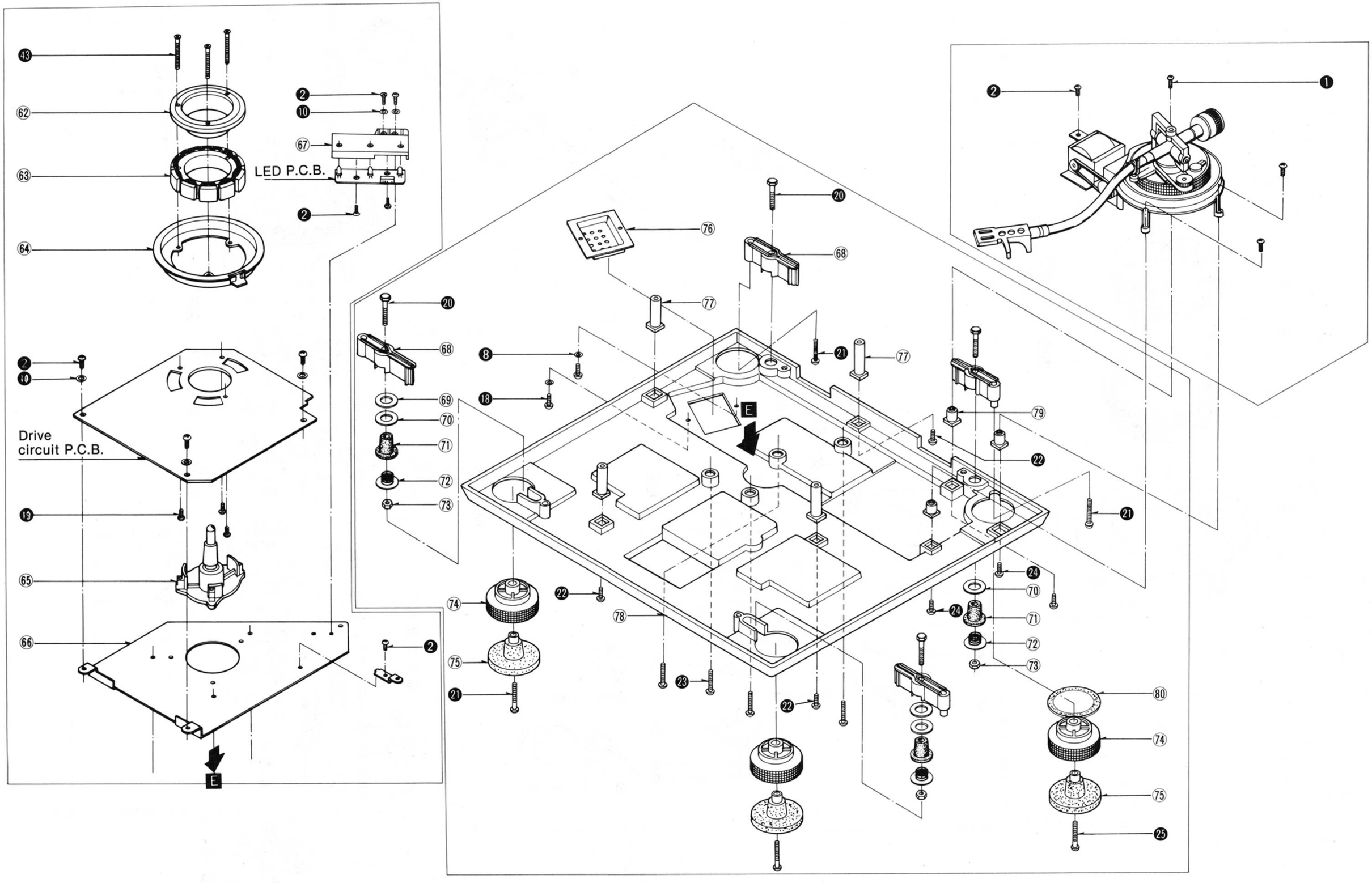

■ EXPLODED VIEW (Tone Arm and Arm Base)

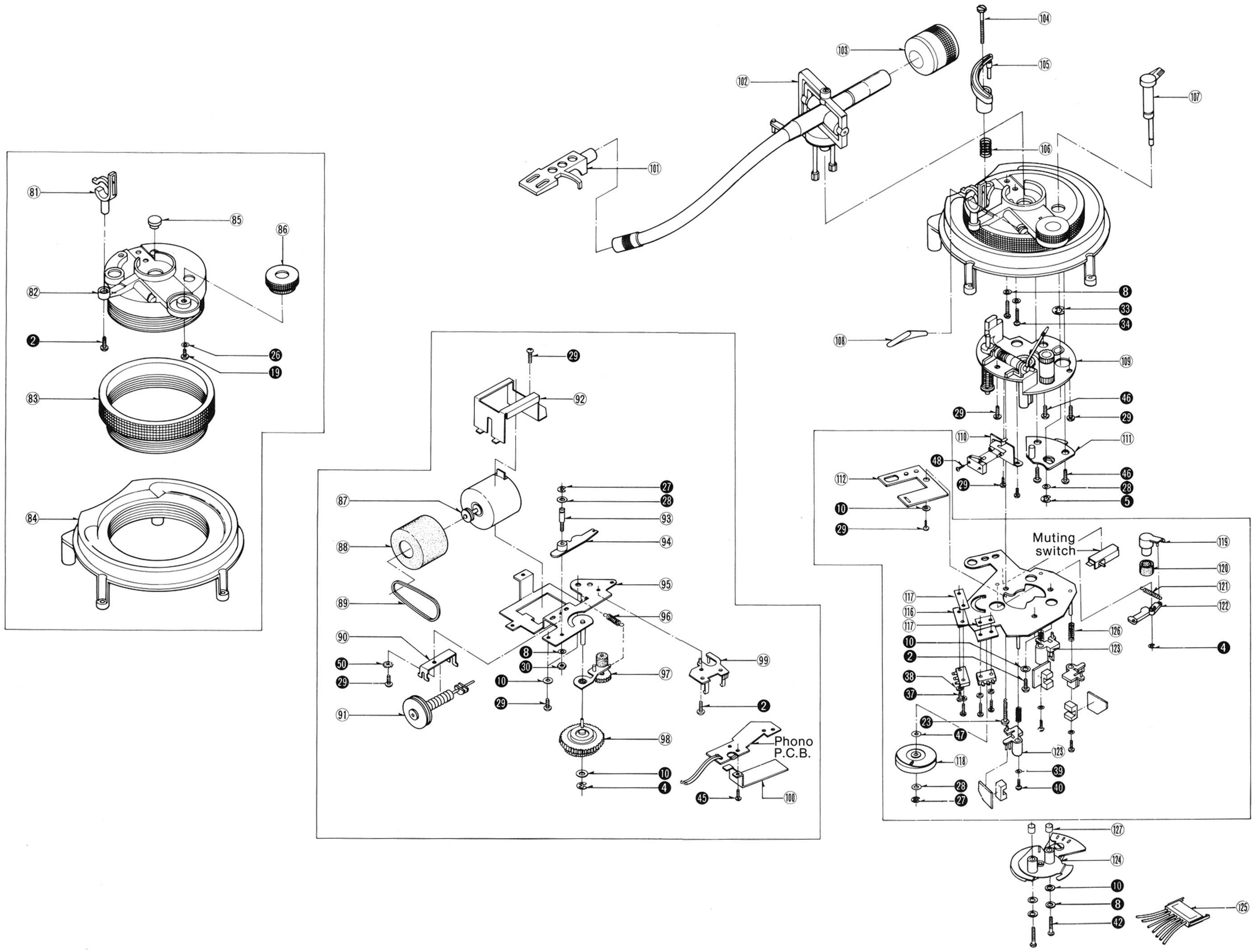

■ REPLACEMENT PARTS LIST (Tone Arm and Arm Base Parts)

Notes: 1. Part numbers are indicated on most mechanical parts.
Please use this part number for parts orders.
2. ⚠ indicates that only parts specified by the manufacturer be used safety.

Ref. No.		Part No.	Part Name & Description
112		SFUM172-58	Base, Muting Switch
116		SFUK172-52E	Plate, Actual
117		SFUP172-59	Bracket, Switch
118		SFUM172-55	Cam, Lift
119		SFUM172-57	Lever, Brake
120		SFGT172-51	Rubber
121		SFQH172-52	Spring
122		SFUM172-56	Lever, Muting
123		SFUM172-59	Holder, Rest Sersor
124		SFUM162-51A	Toner arm Fixing Plate Ass'y
125		SFDJ162-51E	Connector, 12P
126		SFQA172-52	Spring
SCREWS, WASHERS and CIRCLIPS			
❶		**XTN3+8BFZ**	Screw
❷		**XTN3+8B**	Screw
❸		XSN17+3FY	Screw
❹		**XUC2FT**	Circlip
❺		**XUC25FT**	Circlip
❻		**XSN2+8**	Screw
❽		**XWA3B**	Washer
❾		**XSN3+14**	Screw
❿		**XWG3**	Washer
⓫		**XTN4+10B**	Screw
⓬		**XWA4B**	Washer
⓭		**SFXG132-02**	Washer
⓮		XWG3FZ	Screw
⓯		**XTN3+14BFZ**	Screw
⓰		**XSN3+10S**	Screw
⓱		**XTN3+16B**	Screw
⓲		**XSN3+10S**	Screw
⓳		**XTN26+6B**	Screw
⓴		**XVG4C30**	Screw
㉑		**XTN4+25B**	Screw
㉒		**XTV4+14B**	Screw
㉓		**XTN3+25B**	Screw
㉔		**XTN4+12B**	Screw
㉕		**XTN4+45B**	Screw
㉖		**XWG26**	Washer
㉗		**XUC3FT**	Circlip
㉘		**XWE4A10BW**	Washer
㉙		**XTN3+6B**	Screw
㉚		**XNG3ES**	Nut
㉛		**XTV3+8B**	Screw
㉝		**XUC5FT**	Circlip
㉞		**XSN3+8S**	Screw
㊲		**XSN23+12**	Screw
㊳		XWA26B	Washer
㊴		**XWE26BW**	Washer

Ref. No.		Part No.	Part Name & Description
㊵		**XSN26+6**	Screw
㊷		**XSN3+23BVS**	Screw
㊸		SFXGQ20-02	Screw
㊹		XUB14FT	Circlip
㊺		**XTN3+12B**	Screw
㊻		SFPEV17202	Screw
㊼		SFXW910-08	Washer
㊽		XSN23+8	Screw
㊾		XUB14FY	Circlip
㊿		**XWC3B**	Washer
ACCESSORIES			
A1 [M]		SFNU162M01	Instruction Book
A1 [MC]		SFNU162C01	Instruction Book
A2		SFWE212-01	Adaptor, 45 r.p.m.
A3		SFPEN3302	Nut, Cartridge
A4		SFPEW9601	Washer, Cartridge
A5		SFCZV8801	Screw, Cartridge
A6		SFPEV9801	Screw, Cartridge
A7		SFKO135-01	Overhang, Gauge
A8		SFPZB3501	Shell Weight
PACKINGS			
P1 [M]		SFHP162M01	Carton
P1 [MC]		SFHP162C01	Carton
P2		SFHH172-01	Pad, Front
P3		SFHH172-02	Pad, Rear
P4		SFHD172-01	Pad, Top
P5		SFHD172-02	Pad, Turntalbe
P6		SFYH60X65	Polyethylene Cover, Turntable Unit
P7		SFYH60X60	Polyethylene Cover, Dust Cover
P8		SFYH60X60	Polyethylene Cover, Turntable
P9		SPB1083	Polyethylene Cover, Parts
P10		SFYF05A06	Polyethylene Cover, 45 Adaptor & Weight

Printed in Japan
7910 4350 Ⓐ 0.0.

www.vinylengine.com