TEAC®

SERVICE MANUAL

R-999X/R-777X

Auto-Reverse Stereo Cassette Deck

Effective: November, 1984

57040

1 SPECIFICATIONS

仕　様

Notes:

1. Improvements may result in changes in specifications.
2. 0dB is referenced to 0.775 V in this manual.
3. Specifications were determined using metal tape except as note (*).

R-999X

Track System 4-Track, 2-Channel Stereo
Heads 4:2 Erase, 1 Record and 1 Playback (Rotary)
Type of Tape Cassette tape C-60 and C-90 (Philips type)
Tape Speed 4.76 cm/sec. (1-7/8 ips)
Motors 6: 2 DD FG Servo DC motors (for capstan drive)
2 DD coreless DC motors (for reel drive)
2 DC motors (for ancillary and glide control)
Wow and Flutter (WRMS) 0.025%
Frequency Response (Overall) -20 dB
20 – 22,000 Hz Metal Tape
(25 – 21,000 Hz ±3 dB)
20 – 21,000 Hz Co (CrO_2) Tape*
(25 – 20,000 Hz ±3 dB)
20 – 20,000 Hz Normal Tape*
(25 – 19,000 Hz ±3 dB)
Signal-to-Noise Ratio (Overall)
61 dB (3% THD Level, Weighted)
70 dB (Dolby B In, over 5 kHz),
80 dB (Dolby C In, over 1 kHz),
92 dB (dbx In, at 1 kHz)
Dynamic Range 110 dB (dbx in, 1 kHz Peak Level)
Fast Winding Time Approximately 70 seconds for C-60
Inputs Line: 60 mV, 50k ohms
Outputs Line: 0.5 V for load impedance of 50k ohms or more
Headphone: 8 ohms
Power Requirements 100/120/220/240 V AC, 50/60 Hz (General export models)
120 V AC, 60 Hz (U.S.A./Canada)
220 V AC, 50 Hz (Europe)
240 V AC, 50 Hz (U.K./Australia)
100 V AC, 50/60 Hz (Japan)
Power Consumption 38 W
Dimensions (W x H x D) See Fig. 1-1
Weight 8.5 kg (18-12/16 lbs) net
Standard Accessories
Input-output connection cords

CAUTION

⚠Parts marked with this sign are safety critical components. They must always be replaced with identical components – refer to the appropriate parts list and ensure exact replacement.

- Dolby Noise Reduction System manufactured under license from Dolby Laboratories Licensing Corporation.
"Dolby" and the double-D symbol are trademarks of Dolby Laboratories Licensing Corporation.
- dbx Noise Reduction system made under license from dbx, Incorporated. The name "dbx" and the dbx symbol are trademarks of dbx, Incorporated.

注

1. 仕様は改善のため，予告なく変更することがあります。
2. 本マニュアルの0dBは0.775Vを基準としています。
3. 仕様は特に表示した項目を除き，メタル・テープを使用して測定したものです。

R-777X

Track System 4-Track, 2-Channel Stereo
Heads 3: 2 Erase and 1 Record/Playback Head
Type of Tape Cassette tape C-60 and C-90 (Philips type)
Tape Speed 4.76 cm/sec (1-7/8 ips)
Motors 5: 2 DC FG Servo DD for capstan drive
3 DC motors (for reel drive, ancillary & glide panel drive)
Wow and Flutter (WRMS) 0.03%
Frequency Response (Overall) -20 VU
25 – 21,000 Hz Metal Tape
(30 – 20,000 Hz ±3 dB)
25 – 20,000 Hz Co (CrO_2) Tape*
(30 – 19,000 Hz ±3 dB)
25 – 19,000 Hz Normal Tape*
(30 – 18,000 Hz ±3 dB)
Signal-to-Noise Ratio (Overall)
60 dB (3% THD Level, Weighted)
69 dB (Dolby B In, over 5 kHz),
79 dB (Dolby C In, over 1 kHz),
91 dB (dbx In, at 1 kHz)
Dynamic Range 110 dB (dbx in, 1 kHz Peak Level)
Fast Winding Time Approximately 85 seconds for C-60
Inputs Line: 60 mV, 50k ohms
Outputs Line: 0.5 V for load impedance of 50k ohms or more
Headphone: 8 ohms
Power Requirements 100/120/220/240 V AC, 50/60 Hz (General export models)
120 V AC, 60 Hz (U.S.A./Canada)
220 V AC, 50 Hz (Europe)
240 V AC, 50 Hz (U.K./Australia)
100 VAC, 50/60 Hz (Japan)
Power Consumption 32 W
Dimensions (W x H x D) See Fig. 1-1
Weight 8.0 kg (17-10/16 lbs) net
Standard Accessories
Input-output connection cords

注　意

⚠印は安全重要部品です．交換する時は必ずティアック指定の部品を使用してください．

- ドルビーノイズリダクションシステムは，ドルビー研究所からの実施権に基づき製造されています．
- ドルビー及び DDは，ドルビー研究所の登録商標です．
- dbxおよびdbxマークはdbxインコーポレーテッドの登録商標です．
- dbxシステムはdbxインコーポレーテッドの実施権に基づいて製造されています．

2 REMOVAL OF EXTERNAL COMPONENTS

外装部品の外し方

Disassemble in number-order
番号順に外して下さい

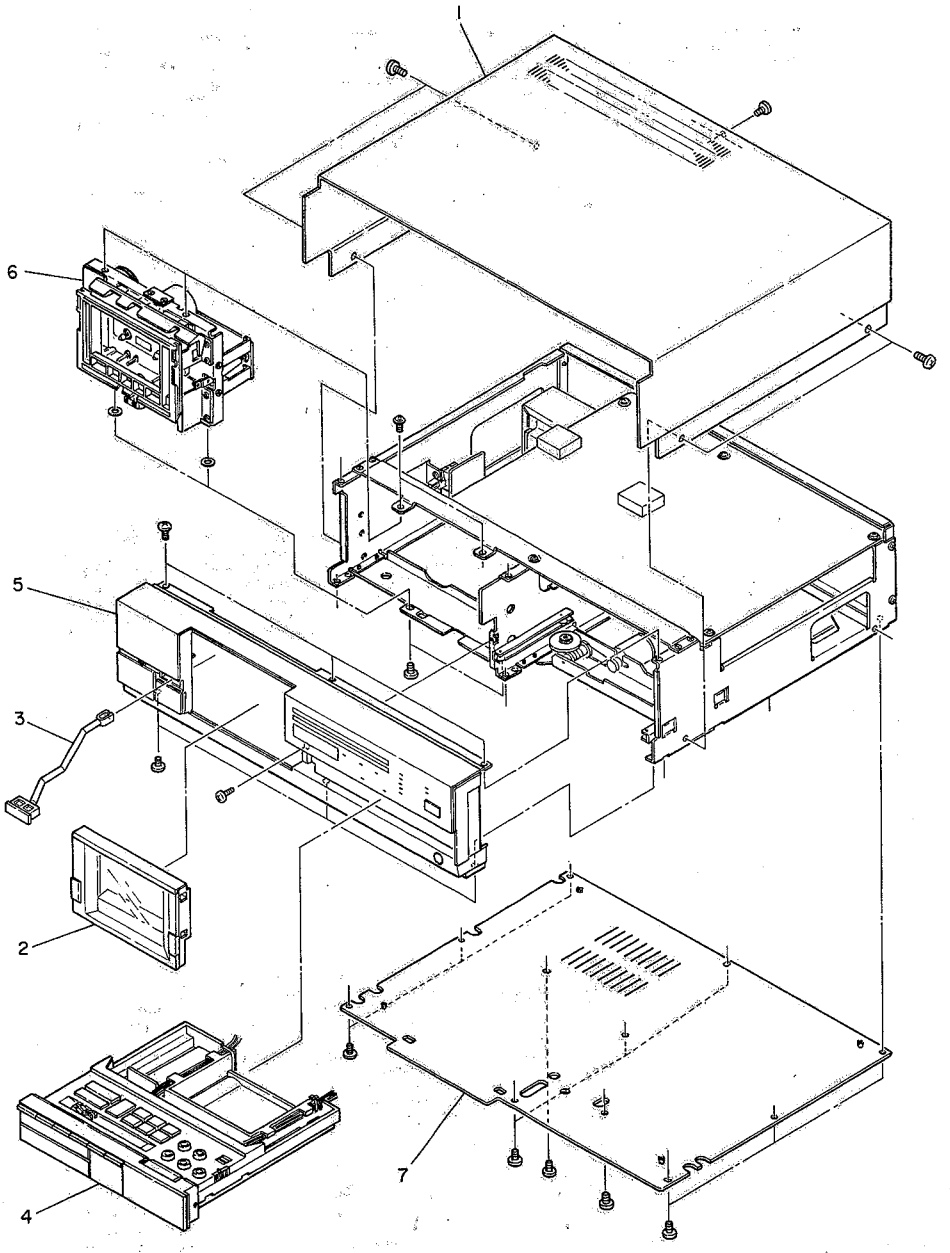

Fig. 2-1

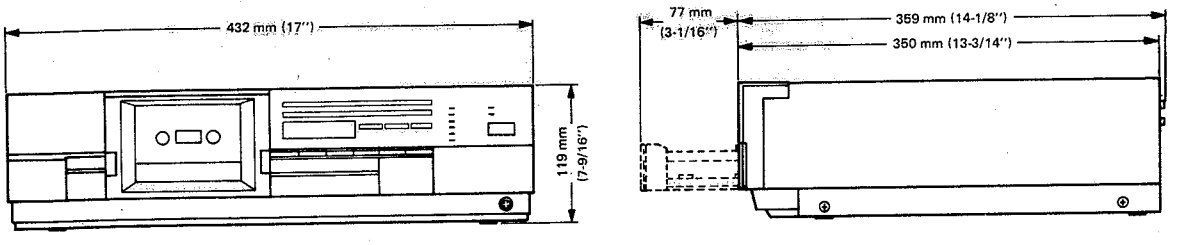

Fig. 1-1

3 PARTS LOCATION

部品配置図

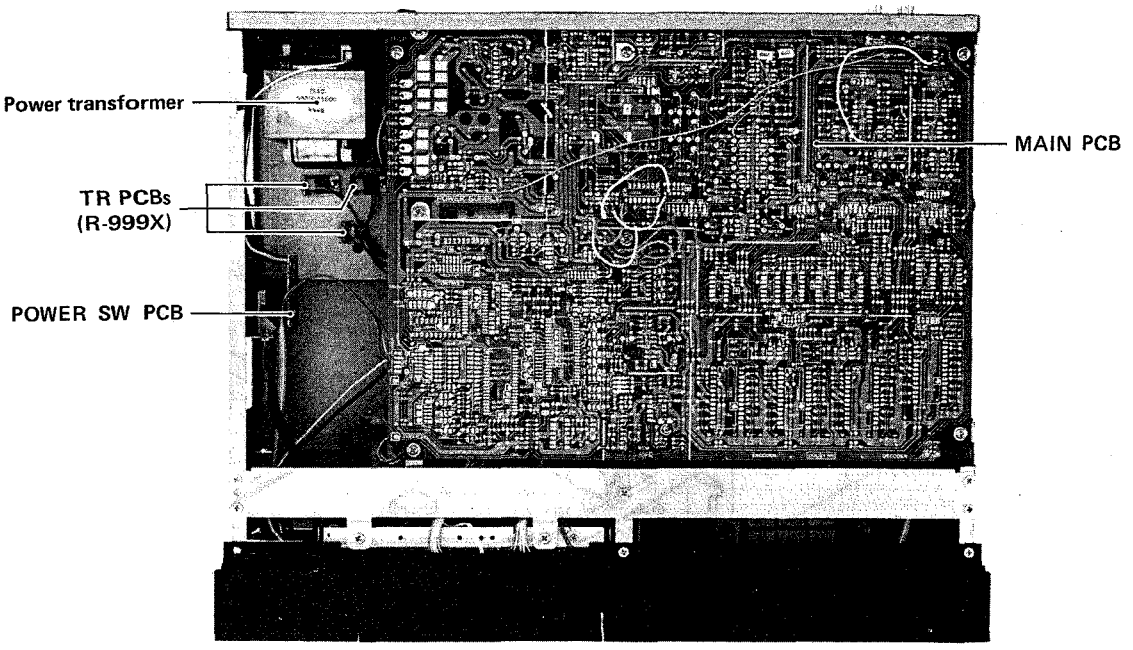

Fig. 3-1 Top view 上面図

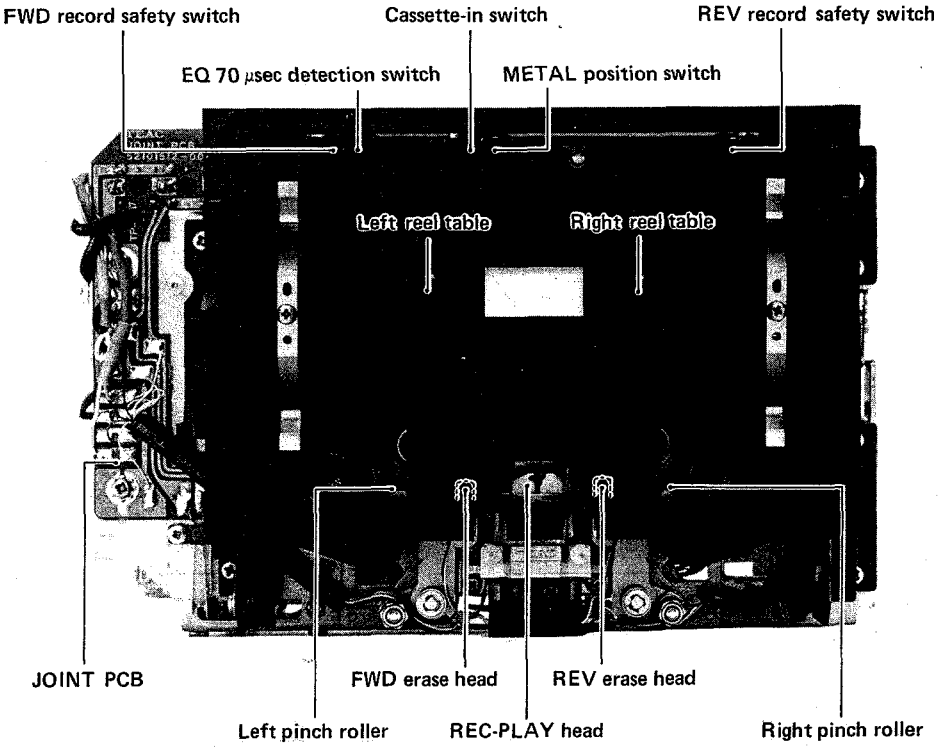

Fig. 3-2 Transport front view トランスポート前面図

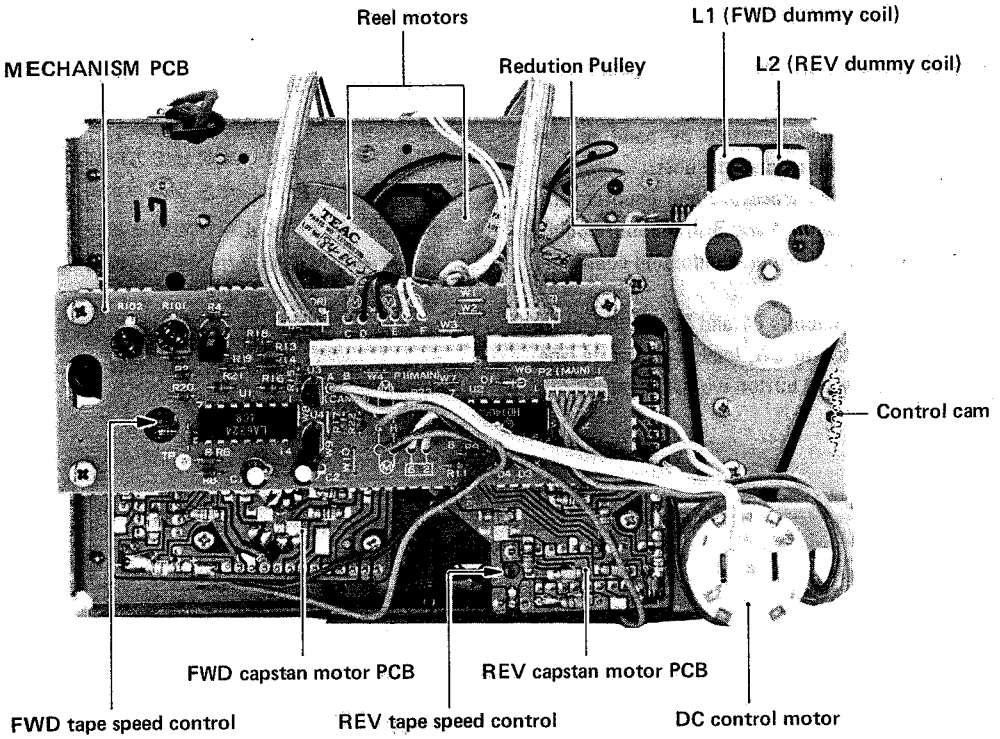

Fig. 3-3 Transport rear view (R-999X) トランスポート後面図(R-999X)

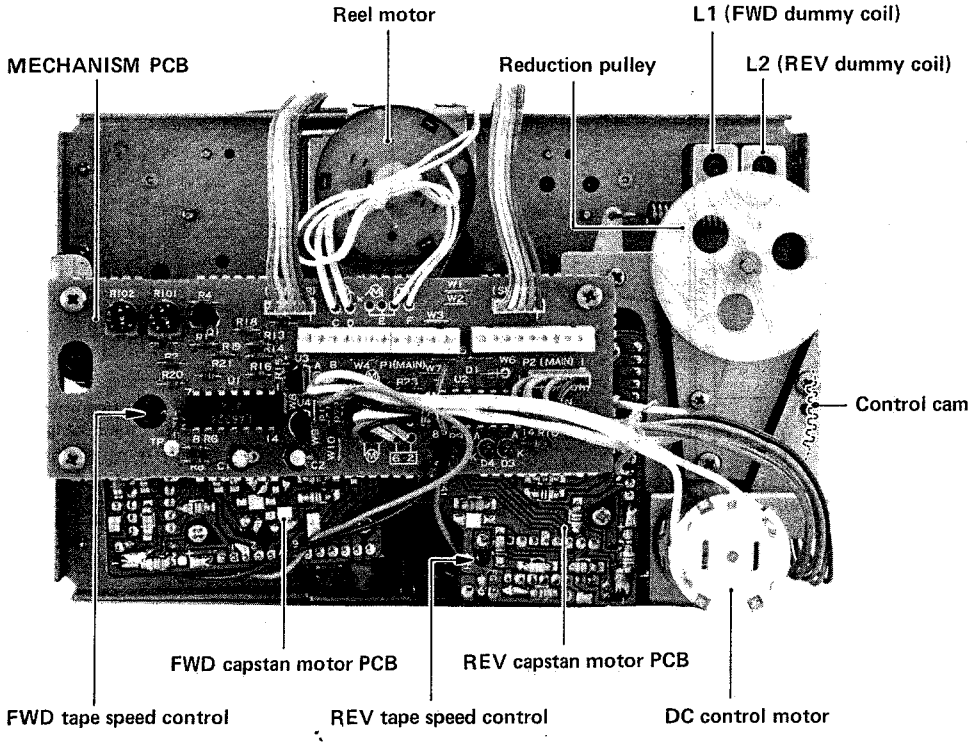

Fig. 3-4 Transport rear view (R-777X) トランスポート後面図(R-777X)

4 MECHANICAL ADJUSTMENTS AND CHECKS

機構部の調整と確認

4-1 CONTROL CAM POSITIONING

1. With POWER switch OFF, remove mechanism chassis assembly from the deck.
2. Disconnect connectors from P1 and P2 on MECHANISM PCB, then connect tester to P1 and P2 as illustrated.
3. Rotate reduction pulley in either direction by hand so that marker F.R.PL on control cam approaches the boss.
4. Manually rotate reduction pulley clockwise and counterclockwise several times and adjust screws A and B so that both points where tester starts to indicate OFF (non-conducting condition) are within marker range.
5. After adjusting, re-connect connectors P1 and P2 to their mated connectors, press POWER switch to ON, load any cassette tape, then check that each tape transport button works correctly.

4-1 コントロール・カムの位置調整

1. POWERスイッチをOFFにして，メカ・シャーシをデッキから外す。
2. MECHANISM PCB上のコネクタP1,P2に接続されているコネクタを外し，代りにテスタを図のように接続する。
3. 減速プーリを手でいずれかの方向に回して，コントロール・カムのF.R.PLマーキングがダボの近くに来るようにする。
4. 減速プーリを手で正転，逆転させ，テスタがOFF（導通しない）を示す開始点がいずれもカムのマーキング内に入るようネジA,Bで調整する。
5. 調整後，外したコネクタをP1,P2へ再接続し，POWERスイッチをON,テープを装てんして各テープ走行操作ボタンが正常に動作するか確認する。

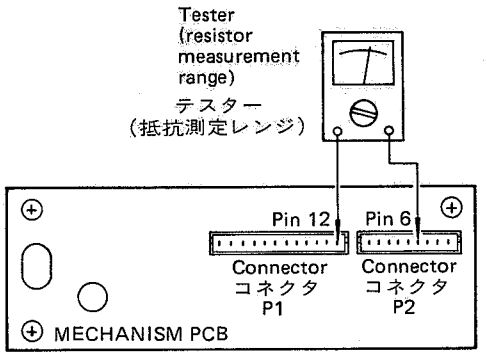

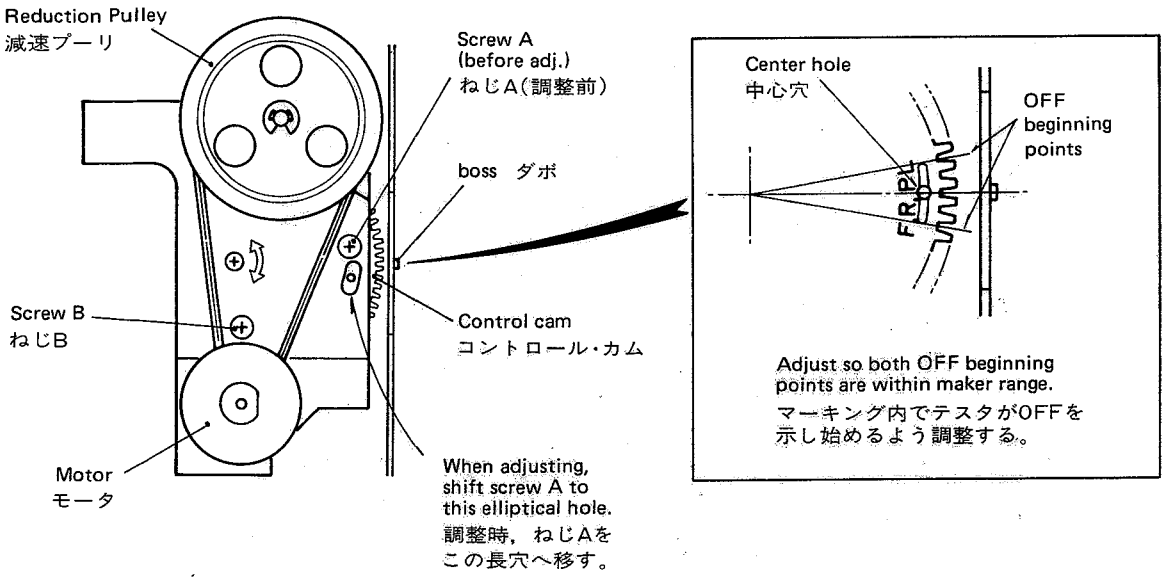

Fig. 4-1 Control cam positioning コントロール・カムの位置調整

4-2 PINCH ROLLER PRESSURE

1. While pushing up the cassette-in switch with the cassette holder shut (Fig. 3-2), place in forward play mode. Keep the cassette-in switch pushed up during measurement.
2. Hook a spring scale to the right pinch roller arm.
3. Pull the scale in the direction shown by the arrow until there is sufficient force to separate the pinch roller from the right capstan shaft, and then allow the pinch roller to slightly touch the capstan shaft again.
4. Read the scale when the pinch roller just starts to rotate. The readings should be as specified below.
   Specification: 330 g ~ 430 g (11.6 oz ~ 15.2 oz)
5. Repeat the above procedure with the exceptions of reverse play mode and left pinch roller.

4-2 ピンチ・ローラ圧着力

1. カセット・ホルダを閉じた状態で，カセット・イン・スイッチ(Fig.3-2)を上方に押して，FWDプレイ・モードにする。測定中，カセット・イン・スイッチは上方に押し続けること。
2. 右ピンチ・ローラ・アームにバネ秤を掛ける。
3. 秤を右ピンチ・ローラの回転が止まるまで図示の方向に引張った後，ピンチ・ローラが再びキャプスタン・シャフトに接触するように徐々に戻す。
4. 右ピンチ・ローラが回りはじめるときの値を読む。
   規格値; 330g～430g
5. 左ピンチ・ローラもREVプレイ・モードで同様に測定する。規格値は上記と同じ。

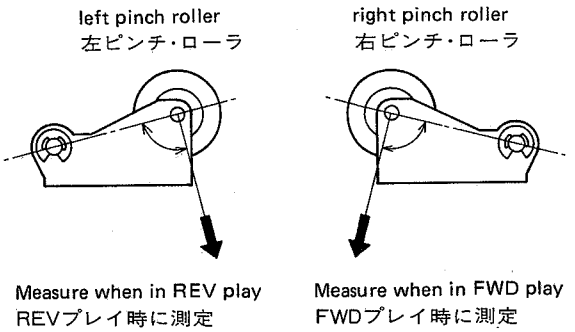

Fig. 4-2 Pinch roller pressure measurement ピンチ・ローラ圧着力測定

4-3 TAPE PATH ADJUSTMENT

Note: The following special tools and tapes are required for this section.
Head check jig A (P/N 5736006600)
Head check jig B (P/N 5736006700)
MTT-150 test tape (for Dolby level calibration)
MTT-356 (or MTT-256) test tape (for frequency response check)
MTT-902 mirror tape (C-90 type)

4-3 テープ走行調整

注：この調整を行うためには次の治具，テスト・テープが必要です。
ヘッド治具A (P/N: 5736006600)
ヘッド治具B (P/N: 5736006700)
MTT-150 テスト・テープ(ドルビー・レベル・セット用)
MTT-356 (又はMTT-256) テスト・テープ(周波数特性測定用)
MTT-902 ミラー・テープ (C-90型)

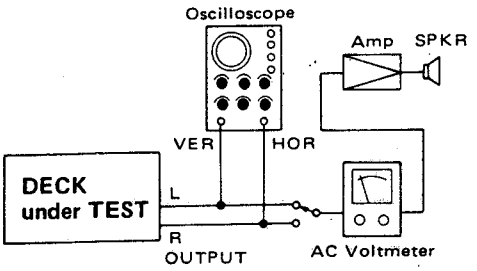

Fig. 4-3 Test setup for azimuth adjustment
アジマス調整接続

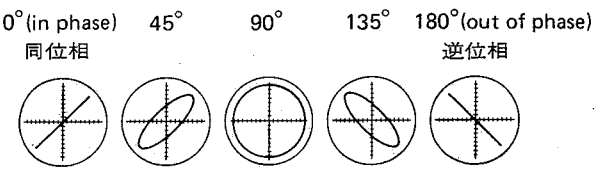

Fig. 4-5 Confirming phase relationship
位相関係図

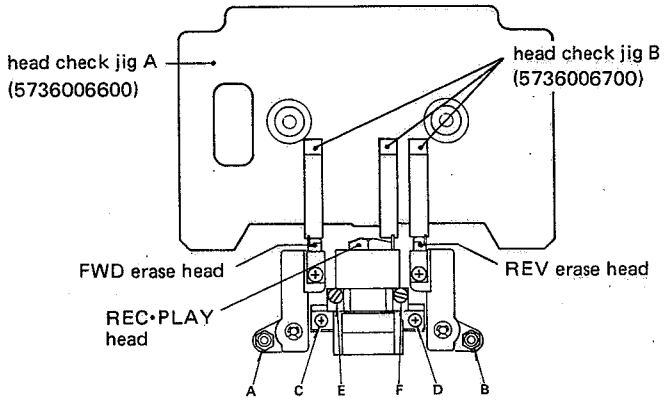

Fig. 4-4 Head height adjustment

START

Erase Head Height Adjustment (Using Jigs)
1. Connect the deck to test equipment as shown in Fig. 4-3.
2. Insert the head check jig A into the cassette holder. Close the holder then push the jig in firmly.
3. Check, in FWD play*, height of FWD erase head's tape guide using head check jig B. If needed, adjust by turning nut A.
4. Similarly, check REV erase head in REV play*. If needed, adjust by turning nut B.
5. Repeat steps 3 and 4 until both requirements are satisfied.

* Pushing up the cassette-in switch (Fig. 3-2), place in play mode. Keep the switch pushed up during adjustments.

REC•PLAY Head Height Adjustment
1. Check, in FWD play*, height of REC•PLAY head's tape guide using head check jig B.
2. In REV play*, check it also.

Tape guide height?

- In both FWD and REV, higher (lower).

Replace spacers below screws C and D with thinner (thicker) ones. (For both C and D, the same number of spacers having same thickness should be added or substracted).

Description	Thickness	Parts Number
Spacer A	0.1 mm	5800595000
Spacer B	0.2 mm	5800595100
Spacer C	0.28 mm	5800595200

REC•PLAY Head Spacers

- In both FWD and REV, the head check jig B can just pass smoothly between the edges of the guide.

or

- Between FWD and REV, relative height is reversed (ex.: higher in FWD, lower in REV).

REC•PLAY Head Azimuth Adjustment
1. Playing a MTT-150 tape in the FWD or REV direction, check that the phase relationship between L-ch and R-ch is within 45°.
2. Playing 10 kHz section of a MTT-356 or MTT-256 tape in the forward direction, adjust screw E so that phase relationship becomes 0°.
3. In REV play, make the same adjustment with screw F.

How many degrees was screw(s) in steps 2 and 3 turned?

More than 45°

Less than 45°

Tape Path Adjustment
Playing MTT-902 mirror tape in FWD and REV, check the following contents.

- Is there tape curling at each tape guide?
- Is the head core (silver) of the REC•PLAY head visible from the tape edge? (R-999X)
- Does tape touch the REC•PLAY head's tape guide's lower edge in FWD mode, and upper edge in REV mode? (R-777X)

- Curling occurred
- Visible
- Not touching

Erase Head Height Adjustment (Using Tape)
Using MTT-902 tape, correct by repeating tape guide height adjustments between FWD erase head in FWD play and REV erase head in REV play.
Adjust screw A for FWD erase head, screw B for REV erase head.

- No curling
- Not visible
- Touches

COMPLETED

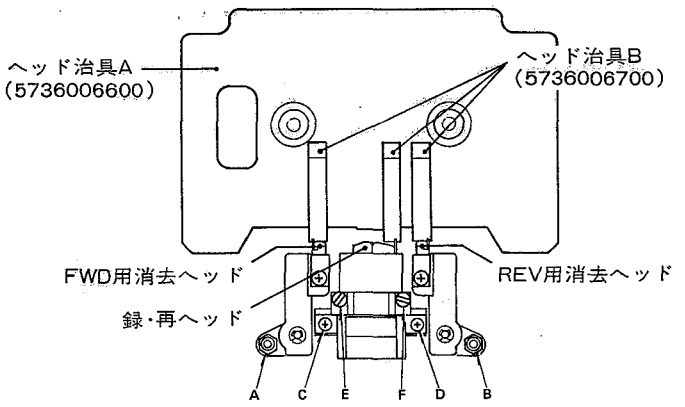

Fig. 4-4 ヘッド高さ調整

スタート

消去ヘッド高さ調整（治具使用）
1. Fig.4-3のようにデッキを接続する。
2. カセット・ホルダにヘッド治具Aを装てんする。
   装てん後，ヘッド治具Aを確実に内側へ押す。
3. ヘッド治具Bを用いてFWDプレイ時* に於けるFWD用消去ヘッドのガイド高さを確認する。
   調整はナットAで行なう。
4. 同様にREVプレイ時* に於けるREV用消去ヘッドのガイド高さを確認する。
   調整はナットBで行なう。
5. 3,4項を満足させるまで繰り返す。

*カセットイン・スイッチ(Fig.3-2)を上方に押して，プレイ・モードにする。
プレイ・モード中，スイッチは上方に押し続けること。

録・再ヘッド高さ調整
1. ヘッド治具Bを用いてFWDプレイ時* に於ける録・再ヘッドのガイド高さを確認する。
2. 同様にREVプレイ時* も確認する

ガイド高さは？

FWD,REV共高い(低い)場合 →

ネジC,Dの下のスペーサを板厚の薄い（厚い）ものに取換える。
(C,D共同じ厚さのものを同枚数増減すること。)

名　称	厚　さ	品　番
スペーサA	0.1mm	5800595000
スペーサB	0.2mm	5800595100
スペーサC	0.28mm	5800595200

録・再ヘッド用スペーサ

・FWD,REV共ヘッド治具Bがガイド溝に完全に入る。
又は
・FWD,REVで高さが逆の場合
（例：FWD時高い，REV時低い）

録・再ヘッド・アジマス調整
1. テスト・テープMTT-150をFWD方向又はREV方向にプレイして，L-chとR-chの位相差が45° 以内であるかどうか確認する。
2. テスト・テープMTT-356又はMTT-256の10kHz区分をFWD方向へプレイして，位相が0° になるように調整ネジEを回す。
3. 同様にREVプレイ時の位相調整を調整ネジFで行なう。

上記2,3項でネジをどの位回転したか？

45° 以上 →

45° 以下

テープ走行調整
MTT-902ミラー・テープをFWD及びREVでプレイさせ下記を確認する。

・各テープ・ガイドでテープがカールしないか？
・録・再ヘッドのコア(銀色)がテープよりはみ出して見えないか？(R-999X)
・FWD時，録・再ヘッドの下側ガイドに，REV時，上側ガイドにテープが接するか？(R-777X)

・カールする
・見える
・接しない →

消去ヘッド高さ調整（テープ使用）
MTT-902テープを走行させて，FWDプレイ時のFWD用消去ヘッド・ガイド高さ調整とREVプレイ時のREV用消去ヘッド・ガイド高さ調整を繰り返して不良を修正する。FWD用消去ヘッドはネジAで，REV用消去ヘッドはネジBで調整を行なう。

・カールしない
・見えない
・接する

完了

4-8 TAPE SPEED ADJUSTMENT

1. Connect a frequency counter to the deck as shown in Fig. 4-10.
2. Playing the mid portion of an MTT-111 test tape in FWD and REV directions, adjust the semi-fixed resistor on each capstan motor PCB so that tape speed becomes 3,000 Hz ±5 Hz. An insulated and non-metallic flat-head screwdriver should be used for this adjustment.
3. In both FWD and REV play modes, check that the following values are obtained at the beginning and at the end of the tape.
   Deviation: 3,000 Hz ±45 Hz
   Width of deviation: Within 30 Hz

4-9 WOW AND FLUTTER CHECKS

Note: In both FWD and REV play modes, these measurements should be made at the beginning, middle and the end of the tape.

4-9-1 PLAYBACK METHOD

1. Connect a wow and flutter meter to the deck as shown in Fig. 4-10.
2. Load a TEAC MTT-111 test tape or equivalent and, in FWD and REV directions, play it to measure the wow and flutter value.
3. Specifications are shown below.
   0.045% WRMS (R-999X)
   0.06% WRMS (R-777X)

4-9-2 RECORD/PLAYBACK METHOD

Note: When measuring with this method, the recorded section should be played back repeatedly to obtain an average value. Be careful not to read the meter for those parts of the tape in which wow and flutter components in recording and playback cancel each other.

4. Load a blank TEAC MTT-552 test tape or equivalent and record a 3,000 Hz signal in FWD (REV) direction.
5. Rewind (fast forward) the tape to the beginning of the recorded section, and play it in the FWD (REV) direction.
6. The wow and flutter should not be more than specified.
   Specification: 0.22% RMS

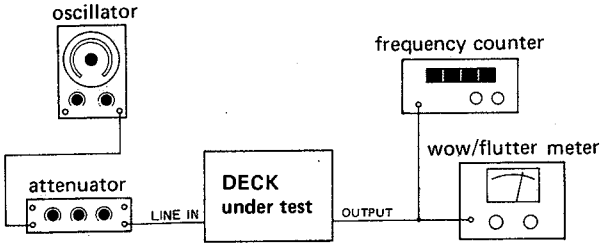

Fig. 4-10 Connection for tape speed, wow and flutter
テープ速度，ワウ・フラッタ測定接続図

4-10 VOLTAGE CONVERSION (FOR GENERAL EXPORT MODELS)

ALWAYS DISCONNECT THE POWER LINE CORD BEFORE MAKING THESE CHANGES.

1. Locate the voltage selector on the rear panel of the deck as shown in the illustration.
2. Using a regular screwdriver, turn the selector until the numerals corresponding to the voltage requirements of your area appear.

4-8 テープ速度調整

1. Fig.4-10のように周波数カウンタをデッキに接続する。
2. MTT-111テスト・テープの中間部をFWD,REVそれぞれで再生して，テープ速度が3,000Hz ±5Hzになるように各キャプスタン・モータPCBの半固定抵抗を調整する。調整には絶縁された非金属製マイナス・ドライバを使用すること。
3. FWD,REVそれぞれに於て，テープの巻始めと巻終りにて下記の値が得られることを確認する。
   偏差： 3,000Hz ±45Hz
   変動巾： 30Hz 以内

4-9 ワウ・フラッタ確認

注意： FWD,REV共，テープの巻始め，中間，巻終りでそれぞれ測定する。

4-9-1 再生法

1. Fig.4-10のようにワウ・フラッタ・メータをデッキに接続する。
2. TEAC MTT-111テスト・テープ又は相当品を装てん後，FWD及びREVの両方向で再生しワウ・フラッタ値を測定する。
3. 規格は下記の通り。
   0.045% WRMS（聴感補正）…… R-999X
   0.06% WRMS（聴感補正）…… R-777X

4-9-2 録再法

注意： 本測定法の場合，録音した部分を幾度かストップ，再生を繰返し，大きく振れる平均的な値を読む。録音した時と再生した時のワウ・フラッタ成分の位相がキャンセルしたところを読まないようにする。

4. ブランク・テスト・テープTEAC MTT-552又は相当品を装てんし，3,000Hz信号をFWD(REV)方向で録音する。
5. テープの録音した部分を巻戻してFWD(REV)方向で再生する。
6. ワウ・フラッタ値は下記の値から外れないこと。
   規格： 0.22%RMS（非聴感補正）

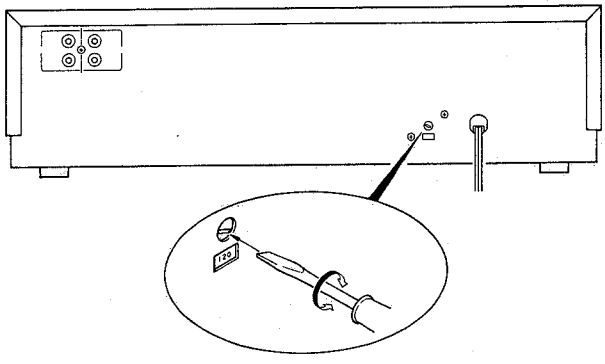

Fig. 4-11 Voltage conversion

5 ELECTRICAL CHECKS AND ADJUSTMENTS

アンプ部の確認と調整

5-1 POWER SUPPLY VOLTAGE ADJUSTMENT

1. Connect a DC voltmeter as shown in Fig. 5-1.
2. Adjust R81 for −12 V on DC voltmeter.

5-1 電源電圧の調整

1. 直流電圧計をFig.5-1 のように接続する。
2. −12VになるようにR81を調整する。

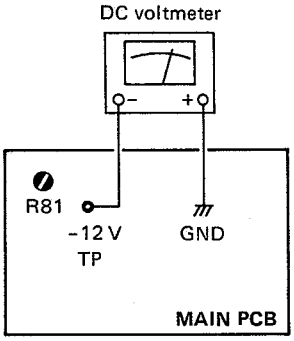

Note: For actual −12 V TP, refer to Figs. 5-16 (R-999X) and 5-18 (R-777X)
注：実際の−12V TPはFig. 5-16(R-999X), Fig. 5-18(R-777X)参照

Fig. 5-1 Power supply voltage adjustment
電源電圧の調整

5-2 PRECAUTIONS

1. Since this deck has an automatic tape selector, be sure to use test tapes that have tape position detecting holes.
2. Before performing adjustments and checks, clean and demagnetize the entire tape path, then check tape motion condition.
3. Make sure the deck is properly set for the voltage in your locality.
4. In general, adjustments and checks are made in the order of L-ch then R-ch.
   Double REF. Nos. such as R12/R22 indicate L-ch/R-ch. In the same way, TP1 (L/R), as example, means TP1L and TP1R, indicates also L-ch/R-ch.
5. The AC voltmeter used in the procedures must have an input impedance of 1 MΩ or more.
6. 0 dB is referenced to 0.775 V.
7. Unless specified otherwise, adjustments and checks are made in FWD direction.

5-2 準備

1. 本機はテープ・セレクタ自動検出機構になっていますので，テスト・テープは必ずテープ・ポジション検出孔のあるものを使用してください。
2. アンプ部の調整のまえに，消去ヘッド，録・再ヘッド，テープ走行部分それぞれを充分消磁し，クリーナ液で清掃してテープ走行状態を確認する。
3. 特に指定の無い限り，調整及びチェックはL-ch，R-chの順序で行って下さい。
   尚R12／R22のように記されている回路番号はL-ch／R-chを示します。TP1(L／R)のように示されている回路番号は，TP1L及びTP1Rを意味し，同様にL-ch,R-chを示します。
4. レベル計は入力インピダンス1MΩ以上のものを使用して下さい。
5. 0dB＝0.775V
6. 特に指示のない場合，調整及びチェックはFWD方向で行なって下さい。

5-3 TEAC TEST TAPES

MTT-150:	For Dolby level calibration
MTT-356:	For playback frequency response check for CrO_2, METAL
MTT-256:	For playback frequency response check for NORMAL
MTT-5072:	For METAL record test
MTT-5061:	For CrO_2 record test
MTT-551:	For NORMAL record test

5-3 TEACテスト・テープ

MTT-150 :	ドルビー・レベル・セット用
MTT-356 :	CrO_2,METALテープの再生周波数特性測定用
MTT-256 :	NORMALテープの再生周波数特性測定用
MTT-5072:	METALテープの録音系テスト用
MTT-5061:	CrO_2テープの録音系テスト用
MTT-551 :	NORMALテープの録音系テスト用

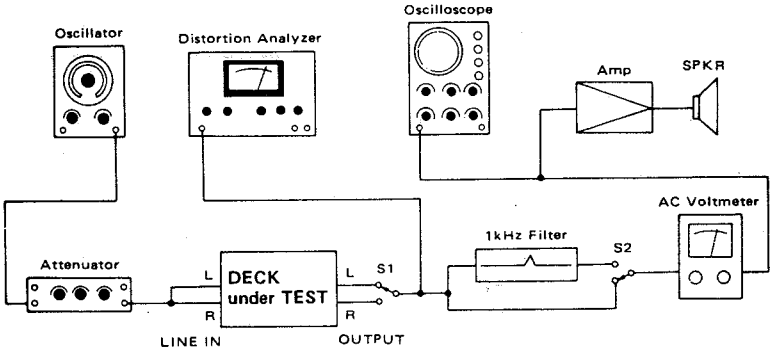

Fig. 5-2 Basic test setup 基本測定接続図

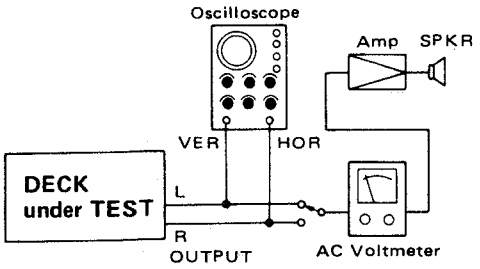

Fig. 5-3 Test setup for azimuth check
位相測定接続図

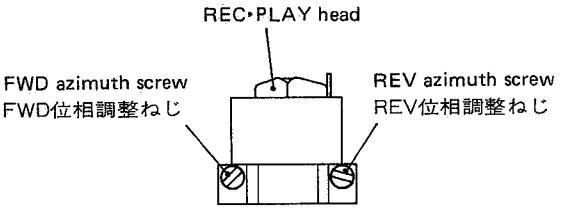

Fig. 5-4 Azimuth screw location
位相調整ネジ

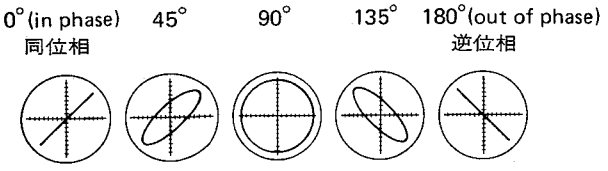

Fig. 5-5 Confirming phase relationship
位相

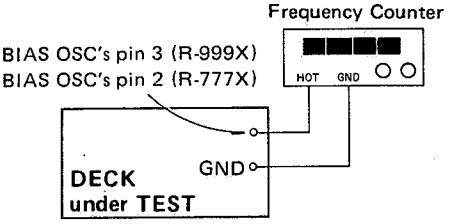

Fig. 5-8 Test setup for bias osc. frequency adjustment
バイアス発振周波数調整用接続図

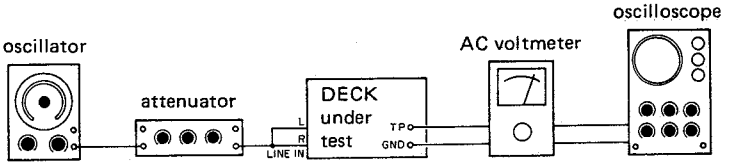

Fig. 5-6 Test setup for test point check テスト・ポイント・チェック時の接続図

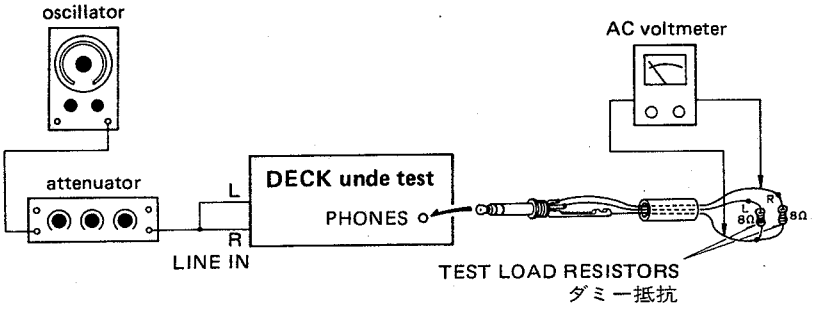

Fig. 5-7 Test setup for PHONES check ホーン出力測定接続図

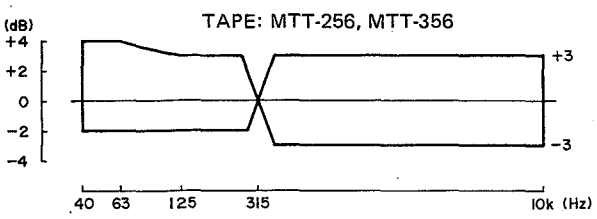

Fig. 5-9 Playback frequency response
再生周波数特性

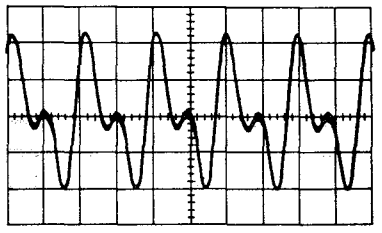

Fig. 5-12 RMS symmetry adjustment (incorrect)
RMSシンメトリ調整(不良)

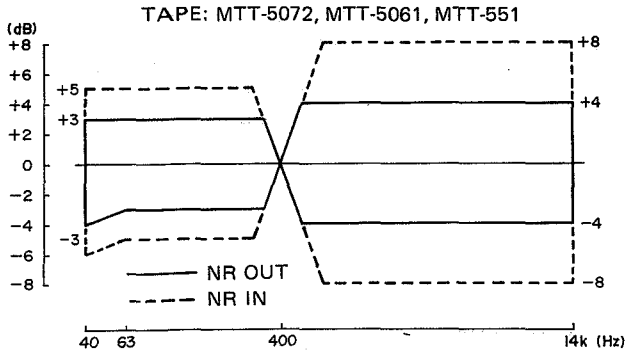

Fig. 5-10 Overall frequency response
録再周波数特性

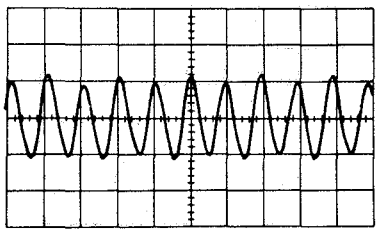

Fig. 5-13 RMS symmetry adjustment (correct)
RMSシンメトリ調整(良)

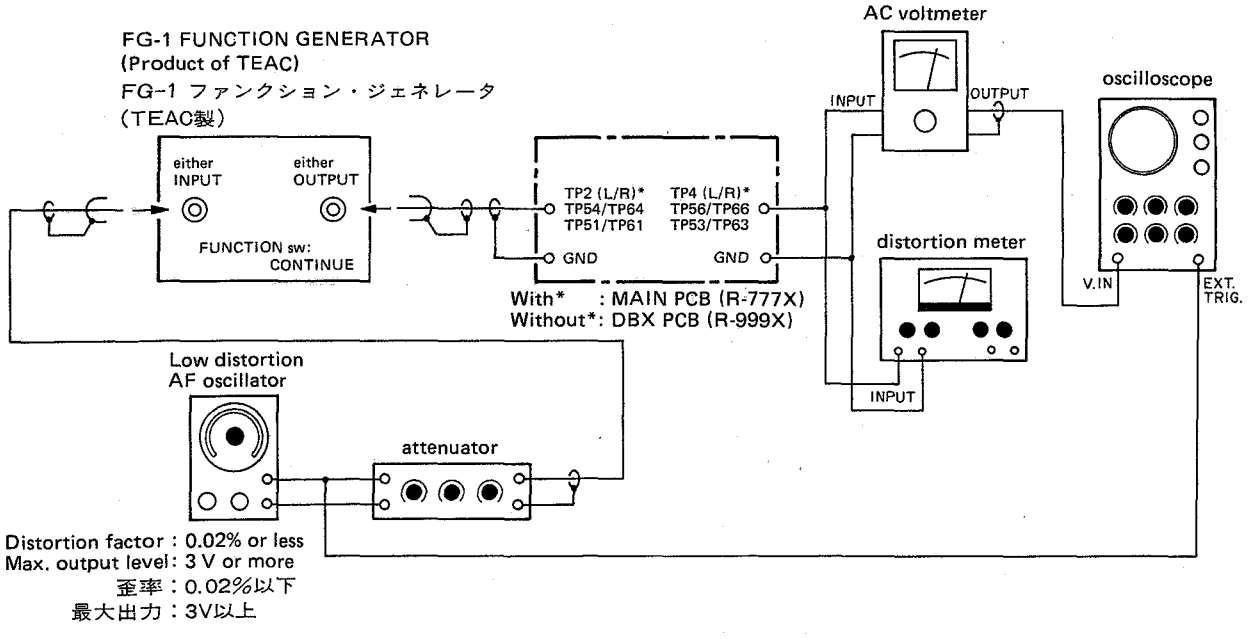

Fig. 5-11 RMS symmetry adjustment setup
RMSシンメトリ調整時の接続

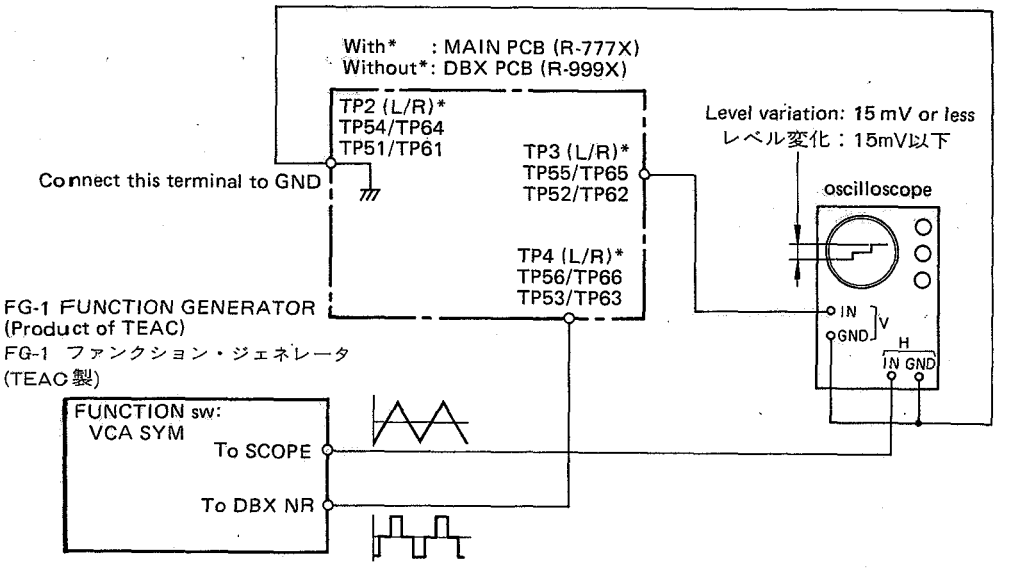

Fig. 5-14 VCA symmetry adjustment setup
VCAシンメトリ調整時の接続

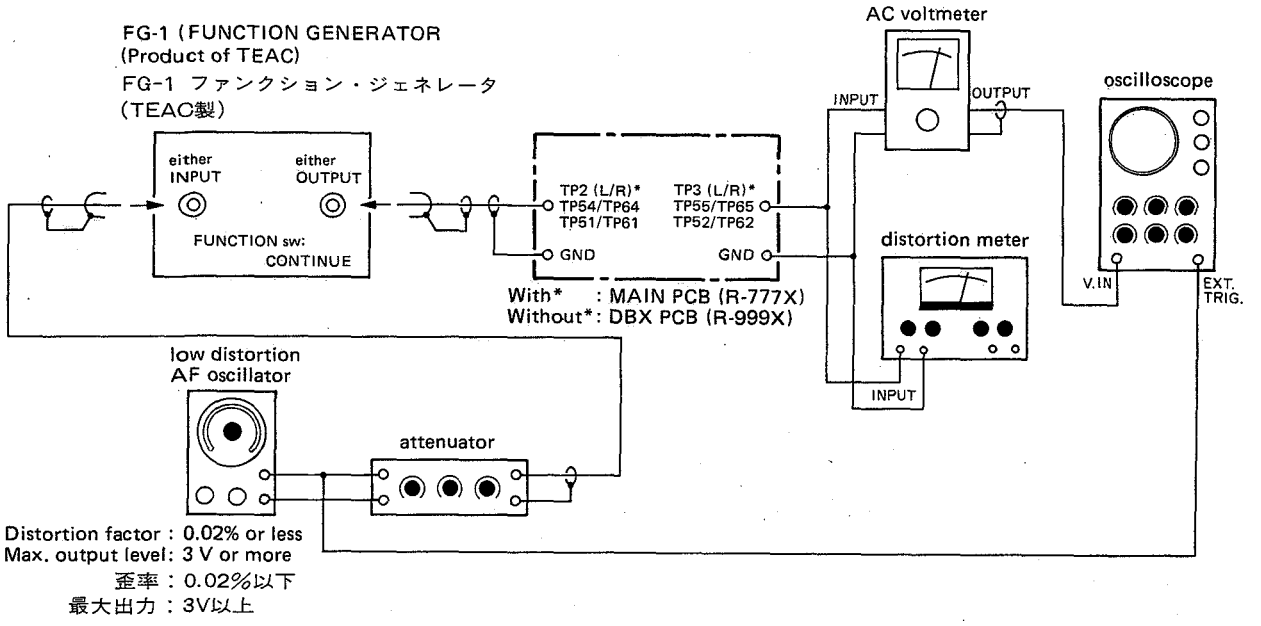

Fig. 5-15 dbx nominal level adjustment setup
dbx基準レベル調整時の接続

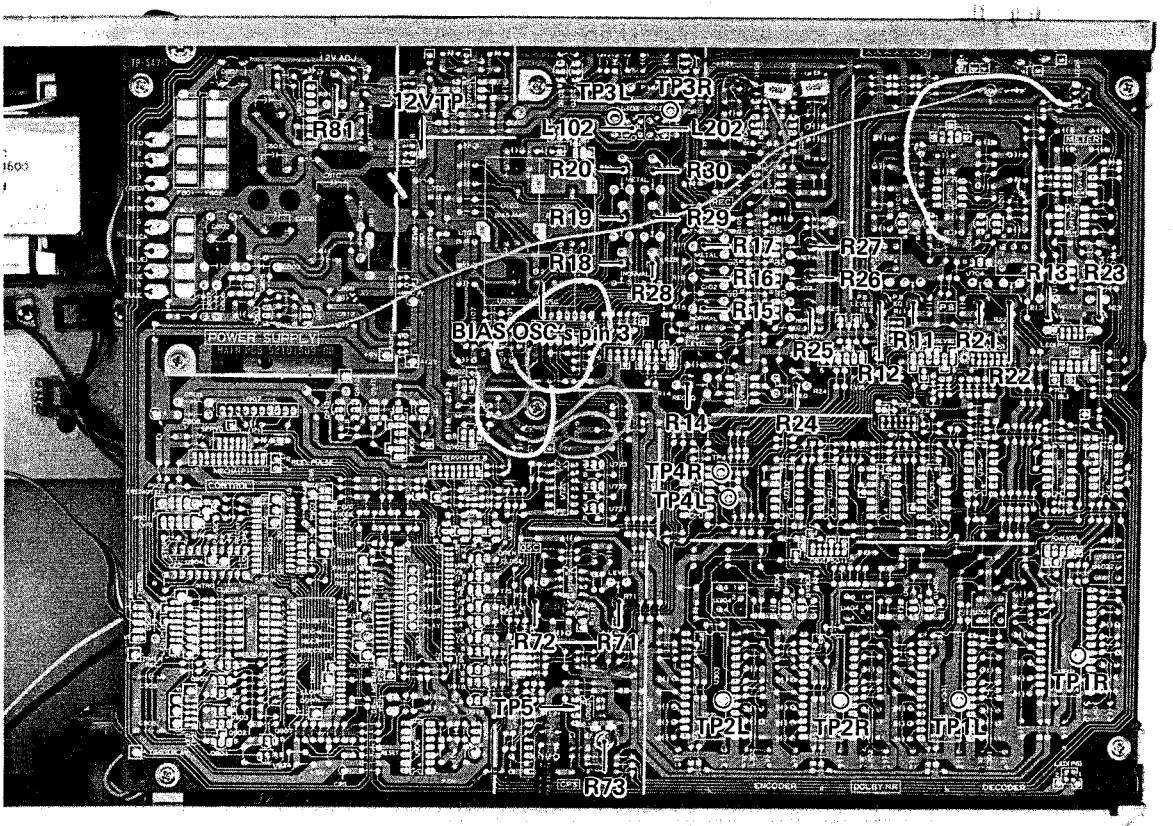

L102/L202	Bias trap	バイアス・トラップ
R11/R21	Playback equalization	再生イコライザ
R12/R22	Playback output level	再生出力レベル
R13/R23	Meter level	メータ・レベル
R14/R24	Record equalization	録音イコライザ
R15/R25	Record level (NORMAL)	録音レベル(NORMAL)
R16/R26	Record level (CrO_2)	録音レベル(CrO_2)
R17/R27	Record level (METAL)	録音レベル(METAL)
R18/R28	Record bias (NORMAL)	録音バイアス(NORMAL)
R19/R29	Record bias (CrO_2)	録音バイアス(CrO_2)
R20/R30	Record bias (METAL)	録音バイアス(METAL)
R71	Built-in oscillater adj. (1)	内部発振器調整(1)
R72	Built-in oscillator adj. (2)	内部発振器調整(2)
R73	CPS level	CPSレベル
R81	Power supply voltage (-12V)	電源電圧調整(−12V)

Fig. 5-16 MAIN PCB (R-999X)

5-4 PLAYBACK PERFORMANCE 再生系

AUTO MONITOR switch (R-999X)	TAPE
NR SYSTEM switch	OUT
OUTPUT control	MAX
AUTO REVERSE switch	⊂⊃

Table 1. Initial settings of playback performance
再生系予備設定

Note: Switches/controls not indicated in this table have not effect on these adjustments/checks.

注意：表中に示されていないスイッチ／つまみは本調整／チェックには関係ありません。

Mode: PLAY (unless otherwise specified 特に指定してある場合を除く)

ITEM 調整項目	SETTING 設定	INPUT SIGNAL 入力信号	ADJUST: 調整個所	MEASURING POINT, RESULT 測定個所・調整値	REMARKS 備考
1. REC・PLAY head azimuth 録・再ヘッドアジマス	Connection: Fig. 5-3 Settings: Table 1 Check/adjust in FWD, REV respectively FWD,REVそれぞれチェック/調整	MTT-150	Check	OUTPUT (L/R): Phase: within 45° 位相：45°以内	Refer to Fig. 5-5
		MTT-256 (MTT-356) (10 kHz)	Azimuth screws of R·P head (Fig. 5-4) 録・再ヘッドのアジマス調整ネジ	OUTPUT (L/R): Phase between L-ch /R-ch: 0° Max. output at L- & R-ch's. L-R間の位相差が0°で且つ各ch共最大出力	
2. Playback output level 再生出力レベル	Same as above 同上 Connection: Fig. 5-6, but do not connect LINE IN (L/R). FWD direction. FWD方向	MTT-150	R12/R22	TP1 (L/R): 387.5 mV (-6 dB)	
	" REV direction. REV方向	"	Check	TP1 (L/R): Same value as above 上記と同じ値になること	
	Connection: Fig. 5-2, but do not connect LINE IN (L/R). FWD direction. FWD方向	"	OUTPUT cont*	OUTPUT (L): -5 dB (436 mV)	
			* After adjusting, do not move (Specific position) 調整後は動かさないこと（規定位置）		
	OUTPUT cont.: Specific position 規定位置	"	Check	OUTPUT (R): -5 dB ± 1.5 dB (367 mV ~ 518 mV)	
3. Meter level setting メータ・レベル・セット	Same as above 同上	"	R13/R23	PEAK LEVEL meter (L/R): 0 dB lit 点灯	
4. Playback frequency response 再生周波数特性	Same as above 同上	MTT-256 (MTT-356)	R11/R21	OUTPUT (L/R): Nearly equal output level at 315 Hz & 10 kHz 315Hzと10kHzの出力がほぼ等しくなるよう調整 · Standard 規格：Fig. 5-9	

ITEM 調 整 項 目	SETTING 設 定	INPUT SIGNAL 入 力 信 号	ADJUST: 調 整 個 所	MEASURING POINT, RESULT 測定個所・調整値	REMARKS 備 考
5. **Playback S/N ratio** 再生S/N比	Same as above 同上	MTT-5061 (fully demagnetized) using bulk tape eraser) (バルク・イレーサで充分消磁されたもの)	Check	OUTPUT (L/R): S/N: 46 dB min. (R-999X) 50 dB min. (R-777X) −5 dB (436 mV) is the reference level 基準レベルは−5dB (436mV)	
	"	MTT-551 (")	Check	OUTPUT (L/R): S/N: 44 dB min. (R-999X) 46 dB min. (R-777X)	"
6. **CPS level** CPSレベル **(R-999X)**	Setting: Same as above 同上 Tape: MTT-150 (Use mid portion) Measure in each condition specified below. 下記の各条件で測定する			Connection: Fig. 5-6, but do not connect LINE IN (L/R)	
	STOP mode (▶ play indicator blinked) (▶ 再生インジケータ点滅) → Press CPS button to get CPS display CPSボタンを押しCPS表示にする → Press ▶▶ button ▶▶ ボタンを押す →			TP5: Measure level レベル測定	(Level 1) (レベル1)
	" → " → Press ◀◀ button ◀◀ ボタンを押す →			TP5: Measure level レベル測定	(Level 2) (レベル2)
	STOP mode (◀ play indicator blinked) (◀ 再生インジケータ点滅) → " → Press ▶▶ button ▶▶ ボタンを押す →			TP5: Measure level レベル測定	(Level 3) (レベル3)
	" → " → Press ◀◀ button ◀◀ ボタンを押す →			TP5: Measure level レベル測定	(Level 4) (レベル4)
	Adjust so that level becomes 0 dB using either of 2 conditions except 2 conditions witch indicate max. and min. levels, among (Level 1) ~ (Level 4). (レベル1)~(レベル4)の内で最大及び最小レベルを示した2条件を除く残り2条件のどちらかでレベルが0dBになるように調整する.		R73	TP5: 0 dB (0.775 V)	

5-5 MONITOR PERFORMANCE モニタ系

AUTO MONITOR switch (R-999X)	SOURCE
NR SYSTEM switch	OUT
RECORD controls (L/R)	Maximum
OUTPUT control	Specific position (set at item 2) 規定位置（２項で調整された位置）
AUTO REVERSE switch	⊂⊃

Note: Switches/controls not indicated in this table have no effect on these adjustments/checks.

注意：表中に示されていないスイッチ／つまみは本調整／チェックには関係ありません。

Table 2. Initial settings of monitor performance
モニタ系予備設定

Mode: STOP (R-999X) or RECORD/PAUSE (R-777X)

ITEM 調整項目	SETTING 設定	INPUT SIGNAL 入力信号	ADJUST: 調整個所	MEASURING POINT, RESULT 測定個所・調整値	REMARKS 備考
7. **Min. LINE input level** ライン最小入力レベル	Connection: Fig. 5-2 Settings: Table 2 Tape: Any recordable tape 録音可能なテープ	LINE IN (L/R): 400 Hz/–19 dB (86.9 mV)	Check	OUTPUT (L/R): –5 dB ± 3 dB (308 mV ~ 615 mV)	
8. **Specified LINE input level** LINE規定入力レベル	Same as above 同上 Connection: Fig. 5-6	LINE IN (L/R): 400 Hz/–9 dB (275 mV)	RECORD cont. (L/R)*	TP1 (L/R): –6 dB (387.5 mV)	
		* After adjusting, do not move (Specific position) * 調整後は動かさないこと（規定位置）			
9. **Meter level** メータ・レベル	Same as above 同上 Connection: Fig. 5-2 RECORD cont.: Specific position 規定位置	LINE IN (L/R): 400 Hz/–9 dB (275 mV)	Check	PEAK LEVEL meter (L/R): 0 dB ± 1 dB	
10. **PHONES output level** PHONES出力レベル	Same as above 同上 Connection: Fig. 5-7	〃	Check	PHONES: At each channel 各チャンネルで –15.7 dB ± 2 dB (101 mV ~ 160 mV)	8 Ω load

5-6 RECORDING PERFORMANCE 録音系

AUTO MONITOR switch (R-999X)	SOURCE
NR SYSTEM switch	OUT
RECORD controls (L/R)	Specific position (Set at item 8) 規定位置 （８項で調整された位置）
LEVEL controls (L/R) (R-999X)	Center position センタ位置
TEST TONE switch (R-999X)	—

BIAS controls (L/R) (R-999X)	Center position センタ位置
BIAS FINE control (R-777X)	REF
CALIBRATION switch (R-999X)	REF
OUTPUT control	Specific position (Set at item 2) 規定位置 （２項で調整された位置）
AUTO REVERSE switch	⊂⊃

Table 3. Initial settings of recording performance
録音系予備設定

ITEM 調整項目	SETTING 設定	INPUT SIGNAL 入力信号	ADJUST: 調整個所	MEASURING POINT, RESULT 測定個所・調整値	REMARKS 備考
11. **BIAS osc. frequency** バイアス 発振周波数	Connection: Fig. 5-8 Settings: Table 3 Tape: MTT-5072 Mode: FWD REC/PAUSE & REV REC/PAUSE	–	L1 (for FWD) L2 (for REV) (Refer to Figs. 3-3 & 3.4. (Fig.3-3及び3-4参照) Do not disturb OSC's trimmer. OSCのトリマは動かさないこと。	BIAS OSC pin 3 (R-999X): BIAS OSC pin 2 (R-777X): Frequency: 100 kHz	
12. **Bias trap** バイアス・トラップ	Same as above 同上 Connection: Fig. 5-6	–	L102/L202 (R-999X) U101/U201 (R-777X)	TP3 (L/R) (R-999X): TP5 (L/R) (R-777X): Min. bias leakage バイアス漏れ最小	
13. **Record bias** 録音バイアス (R-777X)	Same as above 同上 Connection: Fig. 5-2 Mode: REC/PLAY Tape: MTT-551	LINE IN (L/R): 400 Hz & 10 kHz alternately/ 交互信号/ –39 dB (8.69 mV)	R16/R26	OUTPUT (L/R): Equal output level (record and playback) at both frequencies 両周波数の録再出力が等しくなること	
	〃 Tapes: MTT-5072 MTT-5061	Same as above 同上	Check	Same as above 同上	
14. **Record bias** 録音バイアス (R-999X)	When viewed from the top of the deck, initially set R20/R30, R19/R29, R18/R28 fully counterclockwise (minimum bias value position). 最初にR20/R30,R19/R29,R18/R28はデッキ上面から見て左一杯(バイアス値最小)に回しておく.				
	Turn semi-fixed resistors slowly clockwise so that the output (record and playback) reaches a peak, then 2.5 dB beyond and below the peak (over-bias value). 半固定抵抗を徐々に右方向にまわし,録再出力が最大になる点からさらに2.5dB下がる点にセットする (オーバー・バイアス値)				
	Same as above 同上 Mode: REC/PLAY Tape: MTT-5072	LINE IN (L/R): 6.3 kHz/–39 dB (8.69 mV)	R20/R30	OUTPUT (L/R): Over-bias value: オーバー・バイアス値 2.5 dB	
	〃 Tape: MTT-5061		R19/R29		
	〃 Tape: MTT-551		R18/R28		
	〃 Tape: MTT-5072	LINE IN (L/R): 400 Hz & 6.3 kHz alternately/ 交互信号/ –39 dB (8.69 mV)	R14/R24	OUTPUT (L/R): Equal output level (record and playback) between 400 Hz and 6.3 kHz 400Hzと6.3kHzの録再出力が等しくなること	
	〃 Tape: MTT-5072	LINE IN (L/R): 400 Hz & 10 kHz alternately/ 交互信号/ –39 dB (8.69 mV)	R20/R30 (Fine-adj.) (微調する)	OUTPUT (L/R): Equal output level (record and playback) between 400 Hz and 10 kHz 400Hzと10kHzの録再出力が等しくなること	
	〃 Tape: MTT-5061		R19/R29 (〃)		
	〃 Tape: MTT-551		R18/R28 (〃)		
15. **Record level** 録音レベル (R-777X)	Same as above 同上 Tape: MTT-551	LINE IN (L/R): 400 Hz/–12 dB (195 mV)	R15/R25	OUTPUT (L/R): Output level (record and playback) 録再出力: –8.0 dB (300 mV)	
	〃 Tape: MTT-5061 MTT-5072	Same as above 同上	Check	OUTPUT (L/R): Output level (record and playback) 録再出力: –8.0 dB ± 1.5 dB (259 mV ~ 367 mV)	

ITEM 調整項目	SETTING 設定	INPUT SIGNAL 入力信号	ADJUST: 調整個所	MEASURING POINT, RESULT 測定個所・調整値	REMARKS 備考
16. Record level 録音レベル (R-999X)	Same as above 同上 Tape: MTT-5072	LINE IN (L/R): 400 Hz/–12 dB (195 mV)	R17/R27	OUTPUT (L/R): Output level (record and playback) 録再出力： –8.0 dB (300 mV)	
	〃 Tape: MTT-5061		R16/R26		
	〃 Tape: MTT-551		R15/R25		
17. Total harmonic distortion 総合歪率	Same as above 同上 Tapes: MTT-5072 MTT-5061 MTT-551	LINE IN (L/R): 400 Hz/–12 dB (195 mV)	Check	OUTPUT (L/R): 2.0 % or less for all tapes. 各テープで2.0%以下	
18. Overall frequency response 録再周波数特性	Same as above 同上	LINE (L/R): 40 Hz ~ 14 kHz/ –39 dB (8.69 mV)	Check	OUTPUT (L/R): standard: Fig. 5-10	
19. Overall S/N ratio 総合S/N比	Same as above 同上	—	Check	OUTPUT (L/R): METAL : 46 dB min. CrO_2 : 46 dB min. NORMAL: 44 dB min.	
				400 Hz/–9 dB (275 mV) is the reference level 基準レベルは400Hz/−9dB(275mV)	
20. Erase efficiency 消去効果	Same as above 同上 Connection: Fig. 5-2 but engage 1-kHz Filter 1-kHzフィルター使用 Tape: MTT-5072	LINE IN(L/R): 1 kHz/+1 dB (0.869 V)	Check	OUTPUT (L/R): 65 dB min. ratio	
	● Record a 1-kHz signal. Erase the latter half of the recording. Rewind and play to find the difference between the 1-kHz portion and the erased portion. ● 録音部分を再生した時のレベルを基準レベルとし，録音部分を消去した時の出力レベルとの差を測定				
21. REC MUTE function REC MUTE効果	Same as above 同上	Same as above 同上	Check	OUTPUT (L/R): 65 dB min. ratio	
	● Record a 1-kHz signal. Push REC MUTE button midway. Rewind and play to find the difference between the 1-kHz portion and the "rec-mute" portion. ● 1-kHz信号を録音し，途中でREC MUTE釦を押して無信号録音部分を作る． このテープを再生し，1-kHz部分と無側号部分との出力レベル差を測定．				
22. Channel separation チャネル・セパレーション	Same as above 同上	LINE IN: L-ch: 1 kHz/ –9 dB (275 mV) R-ch: No signal	Check	OUTPUT (R): 35 dB min. ratio	
	● Connection: Fig. 5-2, but do not connect LINE IN (R), and engage 1-kHz filter. ● 接続：Fig.5-2,但しLINE IN(R)へは接続不要，1-kHzフィルター使用．				
	● Set the deck to record mode. Rewind and play to find the difference between the 1-kHz recorded portion (L-ch) and "no signal" portion (R-ch). ● 録音後，再生して1-kHz録音部分(L-ch)と無信号録音部分(R-ch)との出力レベル差を測定．				
	● Change the above connection and check reverse operation also. ● L-chとR-chを入れ替えた場合についてもチェックすること．				
23. Adjacent track crosstalk トラック間クロストーク	Same as above 同上	LINE IN: L-ch: No signal R-ch: 125 Hz/ –9 dB (275 mV)	Check	OUTPUT (R): 40 dB min. ratio	
	● Connection: Fig. 5-2, but do not connect LINE IN (L) and OUTPUT (L). ● 接続：Fig.5-2,但しLINE IN(L),OUTPUT(L)の接続を外す．				
	● Record a 125-Hz signal on R-ch track and note output level. Invert tape and play R-ch track. Check leakage level against the output reference of previously recorded portion. ● R-chトラックに125Hzを録音し，その再生出力を基準レベルとする．次にテープを反転し，再生した時のR-ch出力レベルと基準レベルとの差を測定．				

ITEM 調 整 項 目	SETTING 設 定	INPUT SIGNAL 入 力 信 号	ADJUST 調 整 個 所	MEASURING POINT, RESULT 測定個所・調整値	REMARKS 備 考
24. **BIAS FINE control check** BIAS FINE つまみチェック (R-777X)	Same as above 同上 Connection: Fig. 5-2 Tape: MTT-5061 BIAS FINE cont: "REF" position "REF"位置	LINE IN (L/R): 10 kHz/-39 dB (8.69 mV)	Check	OUTPUT (L/R): Measure output level (record and play back). 録再出力を測定する.	
	Same as above BIAS FINE cont: Fully "-" position "−"方向一杯		Check	OUTPUT (L/R): +2 dB against REF position. REF位置から+2dB.	
	Same as above BIAS FINE cont: Fully "+" position "+"方向一杯		Check	OUTPUT (L/R): -2 dB against REF position REF位置から−2dB	
	● Change the tape to MTT-551 tape, then do the above-instructed checks. The same RESULT should be obtained. ● テープをMTT-551に替え，上記と同様のチェックをする． 同じ測定値を得ること.				
25. **Built-in oscillator adjustment** 内部発振器調整 (R-999X)	Same as avove 同上 Connection: Fig. 5-6, but do not connect LINE IN LINE INへは接続不要 CALIBRATION SW: MANU In FWD REC/PAUSE mode, press TEST TONE switch; the deck will be set in FWD REC/PLAY mode, LEVEL L LED will light. FWD REC/PAUSEモードでTEST TONEスイッチを1回押す—FWD REC/PLAYモードになりLEVEL(L)つまみのLEDが点灯する		R71	TP4 (L or R): -26 dB (38.8 mV)	Oscillating frequency: 発振周波数 approx. 315 Hz
	Press TEST TONE switch twice, BIAS L LED will light. TEST TONEスイッチを2回押す—BIAS(L)つまみのLEDが点灯する		Check (R72)	TP4 (L or R): -26 dB ±1.5 dB (32.7 mV~46.1 mV)	Oscillating frequency: 発振周波数 approx. 10 kHz.
26. **LEVEL control check** LEVELつまみ チェック (R-999X)	Same as above Connection: Fig. 5-2 Mode: REC/PLAY LEVEL cont. (L/R): Fully "-" position "−"方向一杯 ↓ Fully "+" position "+"方向一杯	LINE IN (L/R): 400 Hz/-39 dB (8.69 mV)	Check	OUTPUT (L/R): Variation between "-" and "+" positions: "−"と"+"間のレベル変化： 6 dB ±1 dB	
27. **BIAS control check** BIASつまみ チェック (R-999X)	Same as above BIAS cont. (L/R): Fully "-" position "−"方向一杯 ↓ Fully "+" position "+"方向一杯	LINE IN (L/R): 10 kHz/-39 dB (8.69 mV)	Check	OUTPUT (L/R): Variation between "-" and "+" positions: "−"と"+"間のレベル変化: 10 dB min.	

5-7 NR SYSTEM PERFORMANCE

AUTO MONITOR switch (R-999X)	TAPE
NR SYSTEM switch	OUT
RECORD controls (L/R)	Specific position (Set at item 8) 規定位置 (8項で設定された位置)
LEVEL controls (L/R) (R-999X)	Center position センタ位置
TEST TONE switch (R-999X)	—

BIAS controls (L/R) (R-999X)	Center position センタ位置
BIAS FINE control (R-777X)	REF
CALIBRATION switch (R-999X)	REF
OUTPUT control	Specific position (Set at item 2) 規定位置 (2項で設定された位置)
AUTO REVERSE switch	⊂⊃

Table 4. Initial setting of NR SYSTEM performance
NR SYSTEM系予備設定

ITEM 調整項目	SETTING 設定	INPUT SIGNAL 入力信号	ADJUST: 調整個所	MEASURING POINT, RESULT 測定個所・調整値	REMARKS 備考
28. Dolby NR effect (B-type) ドルビーNR効果 (Bタイプ)	Measurement: Record a signal with NR SYSTEM switch OUT. Play this portion with NR SYSTEM switch set first to OUT, then to DD B. Obtain the difference in output level between OUT and DD B positions. 測定法：NR SYSTEMスイッチをOUT位置にして信号を録音する．次にこれを再生し，スイッチをOUT⟷ DD Bと切換えた時の出力レベル変化を測定する．				
	Connection: Fig. 5-2 Settings: Table 4 NR SYSTEM SW: DD B Mode: REC/PLAY Tape: MTT-5072	LINE IN (L/R): 1 kHz/−29 dB (27.5 mV)	Check	OUTPUT (L/R): 5.5 dB ± 2 dB	Level variation レベル変化
		LINE IN (L/R): 10 kHz/−39 dB (8.69 mV)	Check	OUTPUT (L/R): 10 dB ± 2 dB	Level variation レベル変化
29. Dolby NR effect (C-type) ドルビーNR効果 (Cタイプ)	Measurement: Record a signal with NY SYSTEM switch OUT. Play this portion with NR SYSTEM switch set first to OUT, then to DD C. Obtain the difference in output level between OUT and DD C positions. 測定法：NR SYSTEMスイッチをOUT位置にして信号を録音する．次にこれを再生し，スイッチをOUT⟷ DD Cと切換えた時の出力レベル変化を測定する．				
	Same as above 同上 NR SYSTEM sw: DD C	LINE IN (L/R): 1 kHz/−39 dB (8.69 mV)	Check	OUTPUT (L/R): 18 dB ± 2 dB	Level variation レベル変化
		LINE IN (L/R): 10 kHz/−49 dB (2.75 mV)	Check	OUTPUT (L/R): 18 dB ± 2 dB	Level variation レベル変化
30. MPX FIL effect MPX FIL効果	Same as above 同上 Mode: REC/PAUSE NR SYSTEM sw: DD B or DD C	LINE IN (L/R): 19 kHz/−9 dB (275 mV)	Check	OUTPUT (L/R): The level difference between OFF and ON positions on MPX FIL switch MPX FILスイッチがOFF時とON時の出力レベル差 30 dB min.	
31. dbx encoder level dbxエンコーダ・レベル	Same as above 同上 Connection: Fig. 5-6 NR SYSTEM sw: dbx Tape: MTT-551	LINE IN (L/R): 1 kHz/−14.5 dB (146 mV)	Check	TP2 (L/R) (R-777X): TP51/TP61 (R-999X): 300 mV (−8.0 dB)	
				TP3 (L/R) (R-777X): TP52/TP62 (R-999X): 300 mV (−8.0 dB)	
32. dbx encoder single frequency response dbxエンコーダ単一周波数応答	Same as above 同上	LINE IN (L/R): 100 Hz/−14.5 dB (146 mV)	Check	Same as above同上: +0.5 dB ±1 dB against reference 基準レベルからの変化	Reference: 基準レベル 300 mV (−8.0 dB)
		LINE IN (L/R): 10 kHz/−14.5 dB (146 mV)		Same as above : −2.8 dB ±1 dB against reference 基準レベルからの変化	

ITEM 調整項目	SETTING 設定	INPUT SIGNAL 入力信号	ADJUST 調整個所	MEASURING POINT, RESULT 測定個所・調整値	REMARKS 備考
33. dbx encoder operation level dbxエンコーダ動作レベル	Same as above 同上	LINE IN (L/R): 1 kHz/−74.5 dB (146 μV)	Check	Same as above : −30 dB ±0.5 dB against reference 基準レベルからの変化	Reference: 基準レベル 300 mV (−8.0 dB)
		LINE IN (L/R): 1 kHz/+5.5 dB (1.46 V)		Same as above : +10 dB ±0.5 dB against reference 基準レベルからの変化	
34. dbx decoder level dbxデコーダ・レベル	Same as above 同上 Connection: Fig. 5-2 Mode: REC/PLAY	LINE (N (L/R): 1 kHz/−14.5 dB (146 mV)	Check	OUTPUT (L/R): Output level (record and playback): 録再出力 −8.0 dB ±1 dB (275 mV～346 mV)	
35. dbx distortion dbx録再歪率	Same as above 同上 Tape: MTT-5072 MTT-5061 MTT-551	LINE IN (L/R): 400 Hz/−9 dB (275 mV)	Check	OUTPUT (L/R): 1.5% or less for all tapes 各テープで1.5%以下	
36. dbx S/N ratio dbx録再S/N比	Measurement: With NR SYSTEM switch dbx, record a 400-Hz signal, then, "no signal" midway. Rewind and play to find the difference between the 400-Hz portion and "no signal" portion. 測定法：NR SYSTEMスイッチをdbxにして400Hzを途中から無信号を録音後、再生し400Hz出力レベルと無信号録音レベルとの差を測定				
	Same as above 同上	—	Check	OUTPUT (L/R): 65 dB min. for all tapes 各テープで65dB以上	
37. dbx DISC check dbx DISCチェック	Same as above 同上 Mode: REC/PAUSE NR SYSTEM sw: dbx DISC Tape: MTT-551	LINE IN (L/R): 400 Hz/−9 dB (275 mV)	Check	OUTPUT (L/R): +5.5 dB ±2 dB (1.16 V ～ 1.84 V)	
		LINE IN (L/R): 20 Hz/−9 dB (275 mV)	Check	OUTPUT (L/R): −22.5 dB ±3 dB (41.1 mV ～ 82.0 mV)	

5-8 dbx SECTION ADJUSTMENT

Notes: 1. Since this section has been precisely adjusted at the factory, this adjustment is not usually needed unless any of the adjustors have been replaced, or any components on the section have sustained damage.
2. Make the following initial settings.
- POWER switch: ON
  NR SYSTEM switch: OUT
  Deck mode: STOP
- All other front panel switches and controls have no effect on this adjustment.

5-8 dbx部調整

注意：1. dbx部は工場で精密に調整されているので，調整用部品の交換又は部品不良の場合の他は，通常は調整の必要はありません。
2. 調整前に下記の設定をして下さい。
- POWERスイッチ：ON
  NR SYSTEMスイッチ：OUT
  デッキ・モード：STOP
- その他のスイッチ・つまみ設定は本調整には影響ありません。

5-8-1 DECODING ADJUSTMENT デコーダ調整

ITEM 調整項目	SETTING 設定	INPUT SIGNAL 入力信号	ADJUST: 調整個所	MEASURING POINT, RESULT 測定個所・調整値
1. RMS SYM	Connection: Fig. 5-11	TP54/TP64(R-999X): TP2 (L/R) (R-777X): 100 Hz/300 mV	R54/R64 (R-999X) R51/R61 (R-777X)	TP56/TP66 (R-999X): TP4 (L/R) (R-777X): Adjust to get clean 200 Hz sine-wave on 'scope. Refer to Figs. 5-12 & 5-13. 出力波形が200Hzの正弦波になるよう調整. Fig.5-12及び5-13参照
2. VCA SYM	Connection: Fig. 5-14	TP56/TP66(R-999X): TP4 (L/R) (R-777X): Staircase wave 階段波	R53/R63 (R-999X) R53/R63 (R-777X)	TP55/TP65 (R-999X): TP3 (L/R) (R-777X): Adjust so that 'scope face' shows a relatively straight horizontal line (Level variation: 15 mV or less). モニタ波形がほぼ一直線(15mV以下)になるよう調整.
3. Nominal level 基準レベル	Connection: Fig. 5-15	TP54/TP64(R-999X): TP2 (L/R) (R-777X): 1 kHz/300 mV	R56/R66 (R-999X) R52/R62 (R-777X)	TP55/TP65 (R-999X): TP3 (L/R) (R-777X): 300 mV

5-8-2 ENCODING ADJUSTMENT (R-999X) エンコーダ調整(R-999X)

ITEM 調整項目	SETTING 設定	INPUT SIGNAL 入力信号	ADJUST: 調整個所	MEASURING POINT, RESULT 測定個所・調整値
4. RMS SYM	Connection: Fig. 5-11	TP51/TP61: 100 Hz/300 mV	R52/R62	TP53/TP63 Adjust to get clean 200 Hz sine-wave on 'scope. Refer to Figs. 5-12 & 5-13. 出力波形が200Hzの正弦波になるよう調整. Fig.5-12及び5-13参照
5. VCA SYM	Connection: Fig. 5-14	TP53/TP63 Staircase wave 階段波	R51/R61	TP52/TP62 Adjust so that 'scope face' shows a relatively straight horizontal line (Level variation: 15 mV or less). モニタ波形がほぼ一直線(15mV以下)になるよう調整.
6. Nominal level 基準レベル	Connection: Fig. 5-15	TP51/TP61: 1 kHz/300 mV	R55/R65	TP52/TP62: 300 mV

PARTS LIST SECTION

6 EXPLODED VIEWS AND PARTS LIST

分解図とパーツ・リスト

EXPLODED VIEW-1 (R-999X)

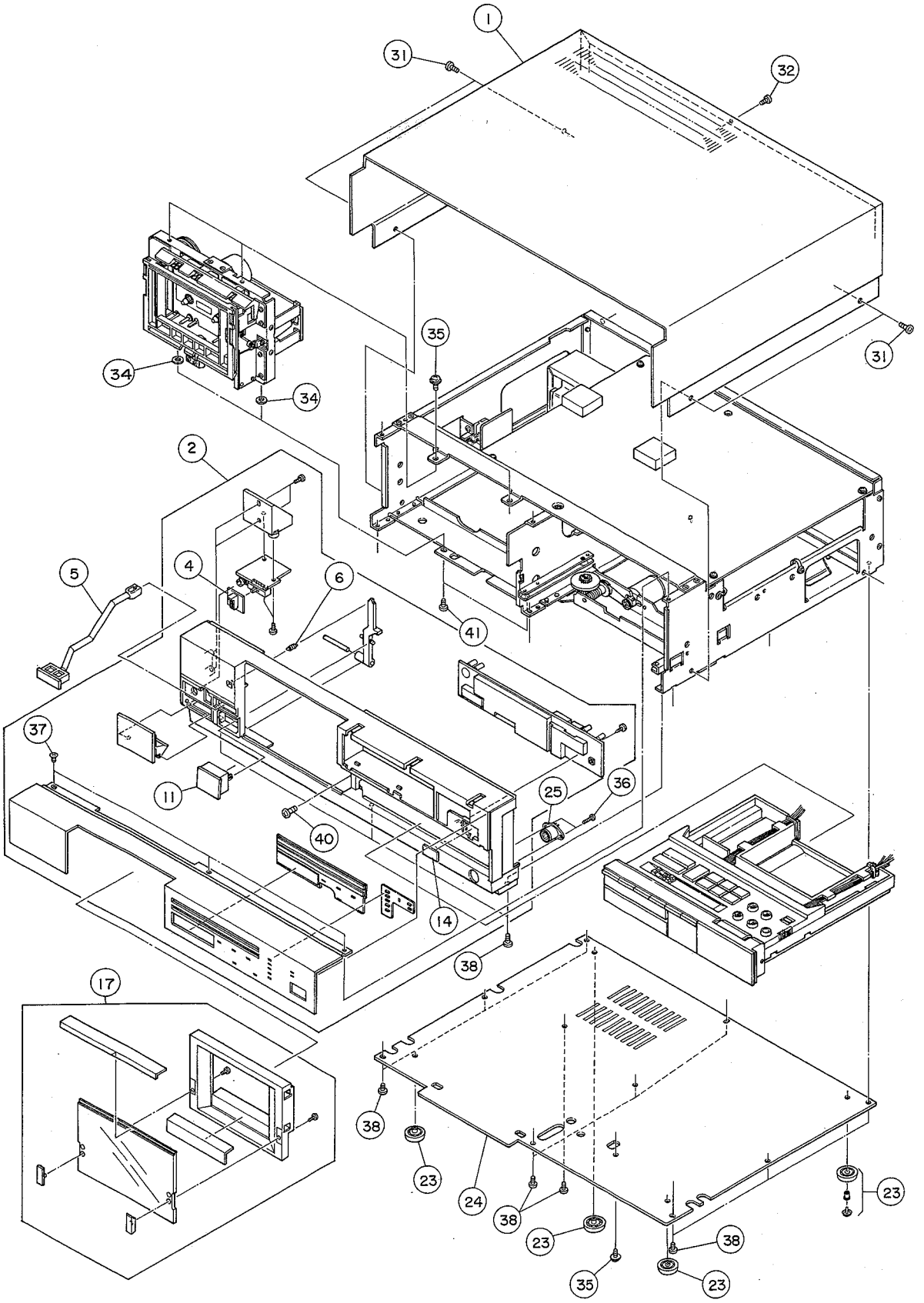

REF. NO.	PARTS NO.	DESCRIPTION	COMMON MODELS	REMARKS
1 - 1	*5800583901	Cover, Top; B	R-777X	
1 - 2	*5640053510	Panel Assy, Front		
1 - 4	5800589100	Knob, Timer	R-777X	
1 - 5	5800608900	Button Assy, Power; B	R-777X	
1 - 6	5800589401	Spring, Eject	R-777X	
1 -11	5800608700	Button Assy, Eject; B	R-777X	
1 -14	5800588000	Cap, Monitor; B		
1 -17	*5640053710	Window Assy, Cassette		
1 -23	*5800268000	Foot	V-77C	
1 -24	*5800593002	Cover, Bottom	R-777X	
1 -25	5334027500	Connector Socket, 4P		
1 -31	*5800612400	Screw, Top Cover; M3X8	V-360C	
1 -32	*5783593006	Screw, Taptite; M3X6		
1 -34	*5785013000	Washer, Flat; ϕ3.3Xϕ8X0.5t		
1 -35	*5783073006	Screw, Washer Head Taptite; M3X6		
1 -36	*5781112008	Screw, Binding Head Tapping; M2X8		
1 -37	*5783043005	Screw, Flat Countersunk Head Taptite; M3X5		
1 -38	*5783003005	Screw, Pan Head Taptite; M3X5		
1 -40	*5783522612	Screw, Pan Head Taptite; M2.6X12 (BLK Ni)		
1 -41	*5783033005	Screw, Binding Head Taptite; M3X5		

INCLUDED ACCESSORIES (R-999X)

REF. NO.	PARTS NO.	DESCRIPTION	REMARKS
	*5350011600	Cord, Input-output Connection	
	*5744043100	Remote Control Unit, RC-205 [GE]	
	*5700057400	R-999X Owner's Manual [J]	
	*5700057500	R-999X Owner's Manual [All except J]	

Parts marked with* require longer delivery time.

[US] : U.S.A. [C] : CANADA [GE] : GENERAL EXPORT [E] : EUROPE
[A] : AUSTRALIA [J] : JAPAN

EXPLODED VIEW-2 (R-999X)

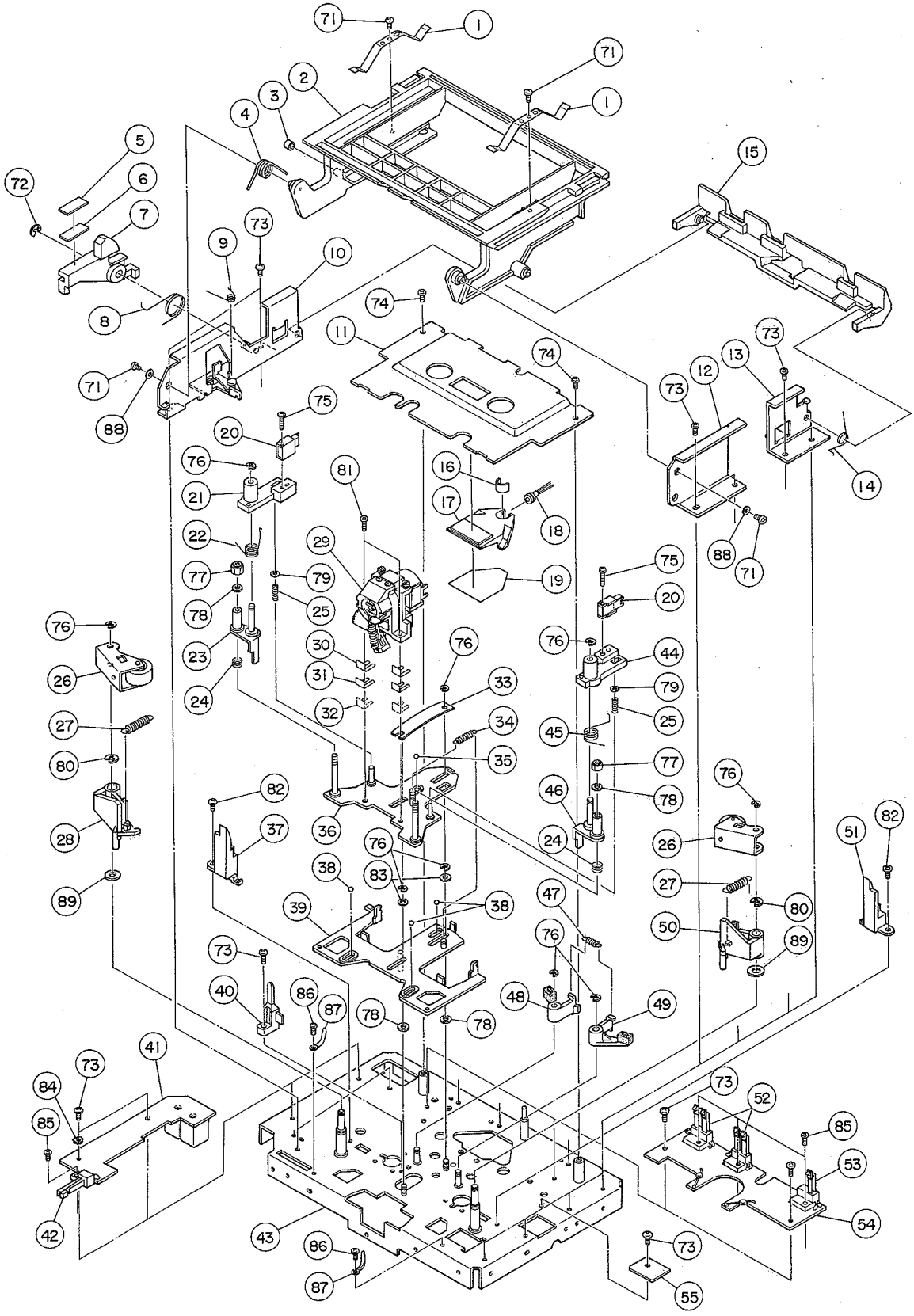

REF. NO.	PARTS NO.	DESCRIPTION	COMMON MODELS	REMARKS
2 - 1	5800616500	Spring, Cassette Pressure	R-777X	
2 - 2	*5800620100	Holder Assy, Cassette	R-777X	
2 - 3	5800126401	Shoe, Brake	V-9	
2 - 4	5800616200	Spring, Cassette Holder	R-777X	
2 - 5	*5800671100	Plate, Spacer; 2 mm	R-777X	
2 - 6	*5800671000	Plate, Spacer; 1.2 mm	R-777X	
2 - 7	*5800596301	Lever, Cassette Lock	R-777X	
2 - 8	5800616300	Spring, Cassette Lock Lever	R-777X	
2 - 9	5800616400	Spring, Eject Preventing Plate	R-777X	
2 -10	*5800620200	Bracket Assy, Holder; L	R-777X	
2 -11	*5800593700	Panel, Cassette	R-777X	
2 -12	*5800593900	Bracket, Holder; R	R-777X	
2 -13	*5800594000	Bracket, R	R-777X	
2 -14	5800616600	Spring, Switch Pressure Arm	R-777X	
2 -15	*5800595600	Arm, Switch Pressure	R-777X	
2 -16	5800423303	Filter, Lamp	Z-6000	
2 -17	5800596200	Lens, Cassette	R-777X	
2 -18	5310006500	Lamp, DC12V		
2 -19	*5800617700	Paper, Reflection	R-777X	
2 -20	5378901700	Head, Erase	R-777X	
2 -21	5800597600	Bracket, Erase Head; L	R-777X	
2 -22	5800615500	Spring, Erase Head Arm; L	R-777X	
2 -23	*5800618700	Arm Assy, Erase Head; L	R-777X	
2 -24	*5800615300	Spring, Erase Head; Hight Adj.	R-777X	
2 -25	*5800615700	Spring, Erase Head Arm Guide	R-777X	
2 -26	5800618900	Arm Assy, Pinch Roller	R-777X	
2 -27	5800615800	Spring, Pinch Roller Arm	R-777X	
2 -28	*5800596700	Arm, Pinch Roller; L	R-777X	
2 -29	5800618300	Head Assy, 1		
2 -30	5800595000	Spacer, A; 0.1 mm	R-777X	
2 -31	5800595100	Spacer, B; 0.2 mm	R-777X	
2 -32	5800595200	Spacer, C; 0.28 mm	R-777X	
2 -33	5800595500	Spring, Pressure	R-777X	
2 -34	5800615400	Spring, Head Base	R-777X	
2 -35	5540055000	Steel Ball, $\phi 2$	A-450	
2 -36	5800618100	Plate Assy, Head Base	R-777X	
2 -37	*5800595700	Guide, Cassette; L	R-777X	
2 -38	5540056000	Steel Ball, $\phi 3$	A-450	
2 -39	*5800618201	Plate Assy, Slider	R-777X	
2 -40	5228009900	Sensor, Phote	R-777X	
2 -41	*5200151200	PCB Assy, JOINT	R-777X	
2 -42	5301753400	Switch, Leaf; LSC-1223-21	R-777X	
2 -43	*5800617900	Chassis Assy, Mechanism; A		
2 -44	5800597700	Bracket, Erase Head; R	R-777X	
2 -45	5800615600	Spring, Erase Head Arm; R	R-777X	
2 -46	*5800618800	Arm Assy, Erase Head; R	R-777X	
2 -47	*5800616100	Spring, Brake	R-777X	
2 -48	*5800620000	Arm Assy, Brake; L	R-777X	
2 -49	*5800619900	Arm Assy, Brake; R	R-777X	
2 -50	*5800596800	Arm, Pinch Roller; R	R-777X	
2 -51	*5800595800	Guide, Cassette; R	R-777X	
2 -52	5301753500	Switch, Leaf; LSA-2125	R-777X	
2 -53	5301753600	Switch, Leaf; LSA-1125-7	R-777X	
2 -54	*5200151100	PCB Assy, SENSOR	R-777X	
2 -55	*5210151300	PCB, JOINT		
2 -71	*5781112004	Screw, Binding Head Tapping; M2X4		
2 -72	*5786003000	E-Ring, E-3		
2 -73	*5783002605	Screw, Pan Head Taptite; M2.6X5		
2 -74	*5780122605	Screw, Binding Head; M2.6X5 (BLK)		
2 -75	*5780112612	Screw, Pan Head; M2.6X12 (Ni)		

(Continued on page 46)

Parts marked with * require longer delivery time.

EXPLODED VIEW-3 (R-999X)

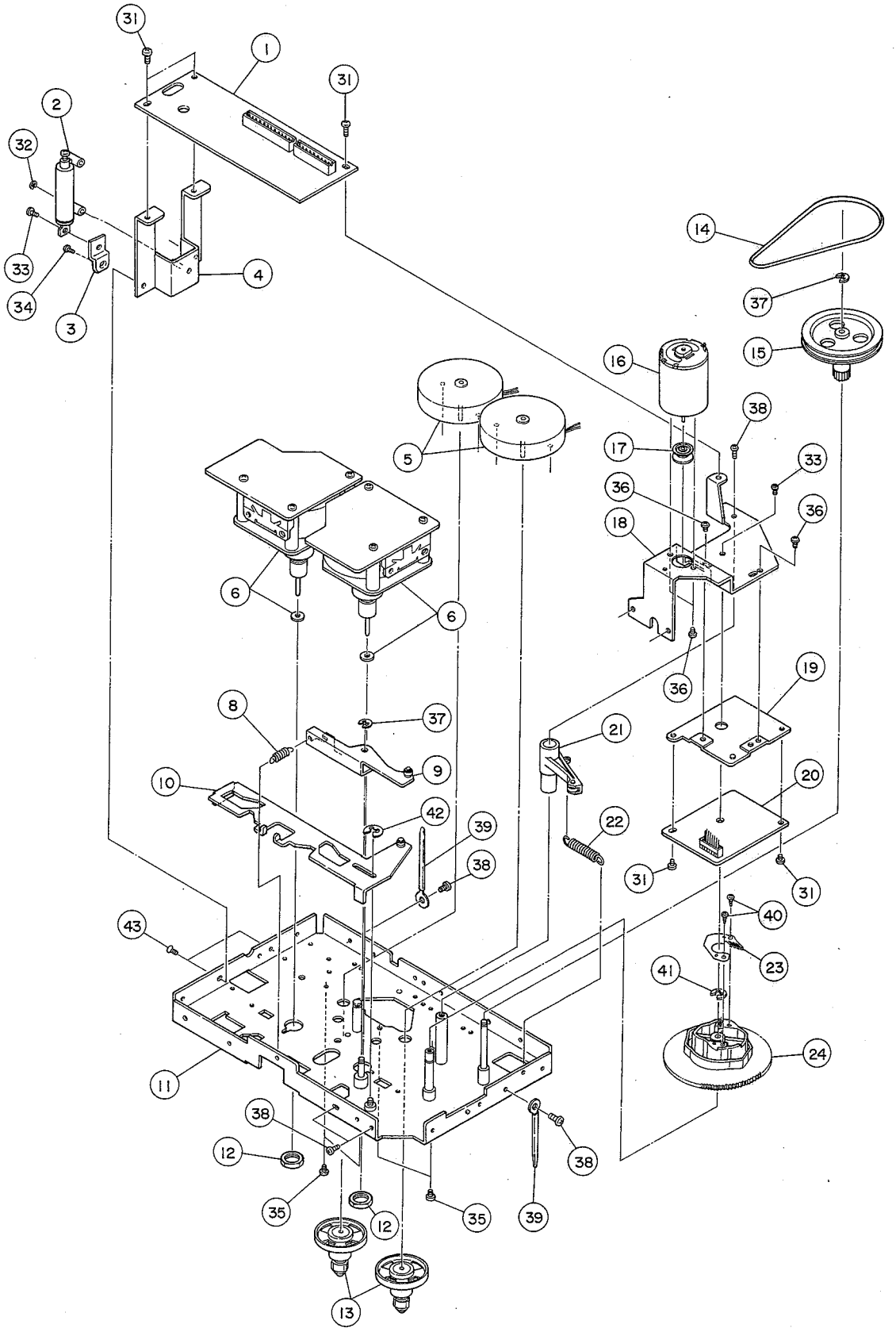

REF. NO.	PARTS NO.	DESCRIPTION	COMMON MODELS	REMARKS
3 - 1	*5200151500	PCB Assy, MECHANISM	R-777X	
3 - 2	5800642100	Damper Assy	R-777X	
3 - 3	*5800594300	Plate, Damper Joint	R-777X	
3 - 4	*5800620300	Bracket Assy, Damper	R-777X	
3 - 5	5370005200	Motor, Reel; DC		
3 - 6	5370005000	Motor, Capstan; DC	R-777X	
3 - 7		(Not used)	R-777X	
3 - 8	*5800615900	Spring, Head Base Arm	R-777X	
3 - 9	*5800620700	Arm Assy, Head Base	R-777X	
3 -10	*5800620800	Lever Assy, Change	R-777X	
3 -11	*5800617900	Chassis Assy, Mechanism; A		
3 -12	*5800442300	Nut	Z-6000	
3 -13	5800619300	Table Assy, Reel		
3 -14	5800597900	Belt, Reduction Pulley	R-777X	
3 -15	5800597000	Pulley, Reduction	R-777X	
3 -16	5370005100	Motor, Control; DC	R-777X	
3 -17	5800617300	Pulley, V	R-777X	
3 -18	*5800594701	Bracket, Motor	R-777X	
3 -19	*5800594100	Bracket, PCB	R-777X	
3 -20	*5210152400	PCB, CAM	R-777X	
3 -21	*5800619000	Arm Assy, Balance	R-777X	
3 -22	*5800616000	Spring, Balance Arm	R-777X	
3 -23	*5800595300	Plate, Contact	R-777X	
3 -24	5800597400	Cam, Control	R-777X	
3 -31	*5783032605	Screw, Binding Head Taptite; M2.6X5		
3 -32	*5786001500	E-Ring, E-1.5		
3 -33	*5780002004	Screw, Binding Head; M2X4		
3 -34	*5781112004	Screw, Binding Head Tapping; M2X4		
3 -35	*5780102603	Screw, Pan Head; M2.6X3		
3 -36	*5780002603	Screw, Binding Head; M2.6X3		
3 -37	*5786002000	E-Ring, E-2		
3 -38	*5783002605	Screw, Pan Head Taptite; M2.6X5		
3 -39	*5786713000	Clamper, Cord; ϕ3		
3 -40	*5781112004	Screw, Binding Head Tapping; M2X4		
3 -41	*5786003000	E-Ring, E-3		
3 -42	*5786010900	E-Ring, E-9		
3 -43	*5783042605	Screw, Flat Countersunk Head Taptite; M2.6X5		

Parts marked with * require longer delivery time.

EXPLODED VIEW-4 (R-999X)

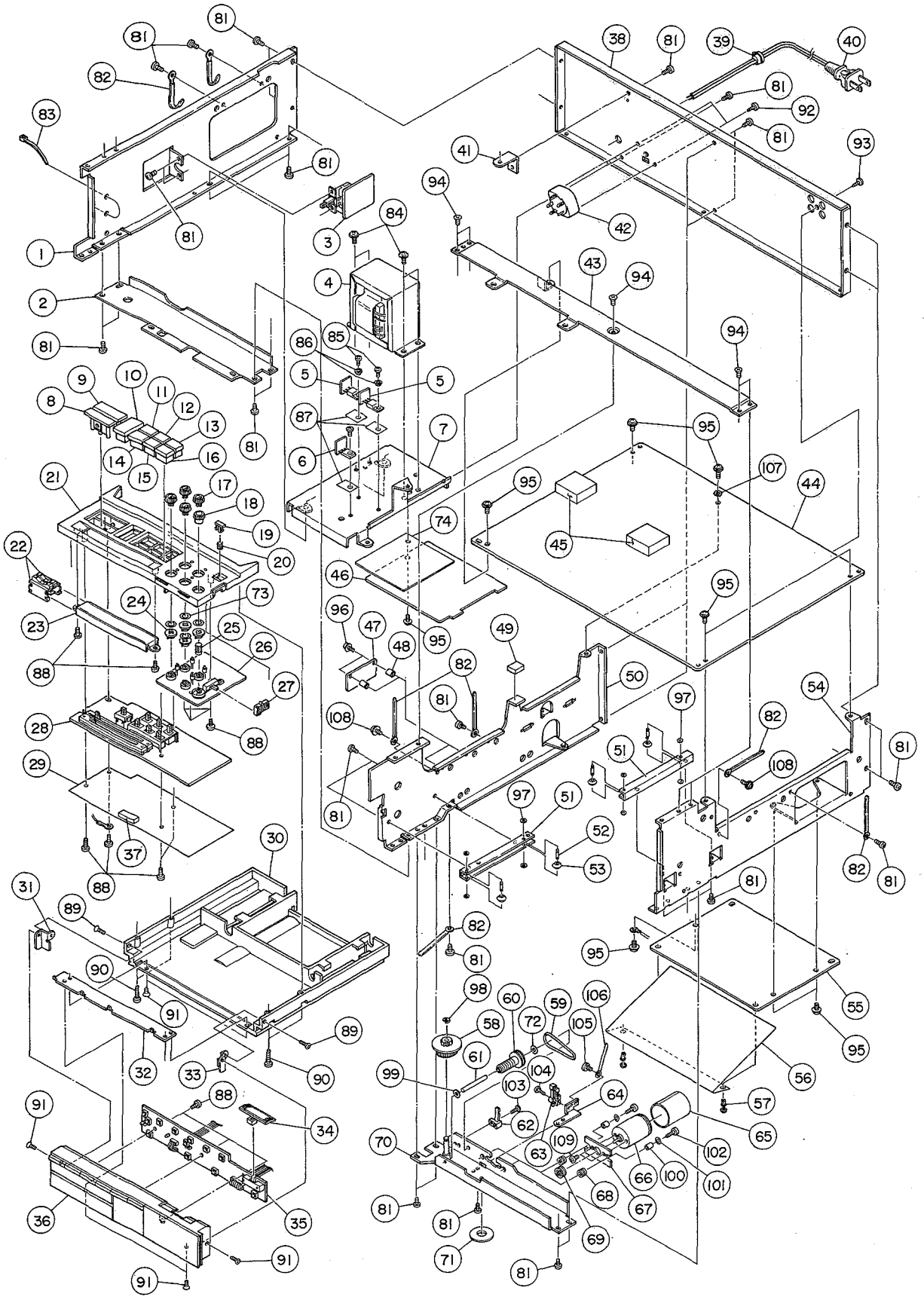

REF. NO.	PARTS NO.	DESCRIPTION	COMMON MODELS	REMARKS
4 - 1	*5800584200	Chassis, Side; A	R-777X	
4 - 2	*5800592400	Bracket, Mechanism; A	R-777X	
4 - 3	*5200151900	PCB Assy, POWER SW [J]		
	*5200151910	PCB Assy, POWER SW [US]		
	*5200151920	PCB Assy, POWER SW [C]		
	*5200151930	PCB Assy, POWER SW [GE]		
	*5200151940	PCB Assy, POWER SW [E, A]		
4 - 4	⚠ 5320031400	Transformer, Power [J]		
	⚠ 5320031500	Transformer, Power [US, C]		
	⚠ 5320031600	Transformer, Power [GE]		
	⚠ 5320031700	Transformer, Power [E, A]		
4 - 5	*5200152300	PCB Assy, TR; 1		
4 - 6	*5200154800	PCB Assy, TR; 2		
4 - 7	*5800591801	Bracket, Transformer	R-777X	
4 - 8	5800583301	Button, PAUSE		
4 - 9	5800583201	Button, REC		
4 -10	5800583101	Button, D		
4 -11	5800582801	Button, A; OUT		
4 -12	5800583001	Button, C; dbx		
4 -13	5800585401	Button, B; dbx DISC		
4 -14	5800582901	Button, B; DD B		
4 -15	5800585501	Button, C; DD C		
4 -16	5800585301	Button, A; MPX FIL		
4 -17	5800590700	Knob, VR; B		
4 -18	5800590600	Knob, VR; A		
4 -19	5800590300	Button, Test Tone		
4 -20	5800589500	Spring, Button		
4 -21	*5800584601	Box, Control; A		
4 -22	5800621200	Knob Assy, Slide VR		
4 -23	*5800583400	Rail, VR Knob		
4 -24	*5800590500	Shaft, VR; B		
4 -25	*5800590400	Shaft, VR; A		
4 -26	*5200152100	PCB Assy, BL		
4 -27	5800587900	Knob, Calibration		
4 -28	*5200151610	PCB Assy, VR		
4 -29	*5800606300	Plate, Shield; B	R-777X	
4 -30	*5800584802	Box, Control; C	R-777X	
4 -31	*5800588700	Bracket, L	R-777X	
4 -32	*5800591200	Bracket, A	R-777X	
4 -33	*5800588800	Bracket, R	R-777X	
4 -34	5800592200	Knob, Mode SW	R-777X	
4 -35	*5200151701	PCB Assy, SW		
4 -36	5800609101	Box Assy, Control; DB	R-777X	
4 -37	*5800647500	Cushion, Angle	V-330	
4 -38	*5800584501	Panel, Rear	R-777X	
4 -39	⚠*5534660000	Bushing, Cord; 4N-4		
4 -40	⚠*5128027000	Cord, AC Power [J]		
	⚠*5350008200	Cord, AC Power [E]		
	⚠*5350008300	Cord, AC Power [A]		
	⚠*5350010800	Cord, AC Power [US, C, GE]		
4 -41	*5800249801	Bracket, PCB; B	V-70C	
4 -42	⚠*5302101700	Switch, Voltage Select [GE]		
4 -43	*5800592501	Bracket, Mechanism; B	R-777X	
4 -44	*5200150901	PCB Assy, MAIN [J, US, C, GE]		
	*5200150911	PCB Assy, MAIN [E, A]		
4 -45	*5800673600	Cushion, A	R-777X	
4 -46	*5200152200	PCB Assy, SERVO		
4 -47	*5200164800	PCB Assy, SENSE		
4 -48	*5800672900	Collar, $\phi 3 \times \phi 5.5 \times 7t$	R-777X	
4 -49	*5800673700	Cushion, B	R-777X	

(Continued on page 47)

Parts marked with * require longer delivery time.

[US]: U.S.A. [C]: CANADA [GE]: GENERAL EXPORT [E]: EUROPE
[A] : AUSTRALIA [J]: JAPAN

EXPLODED VIEW-1 (R-777X)

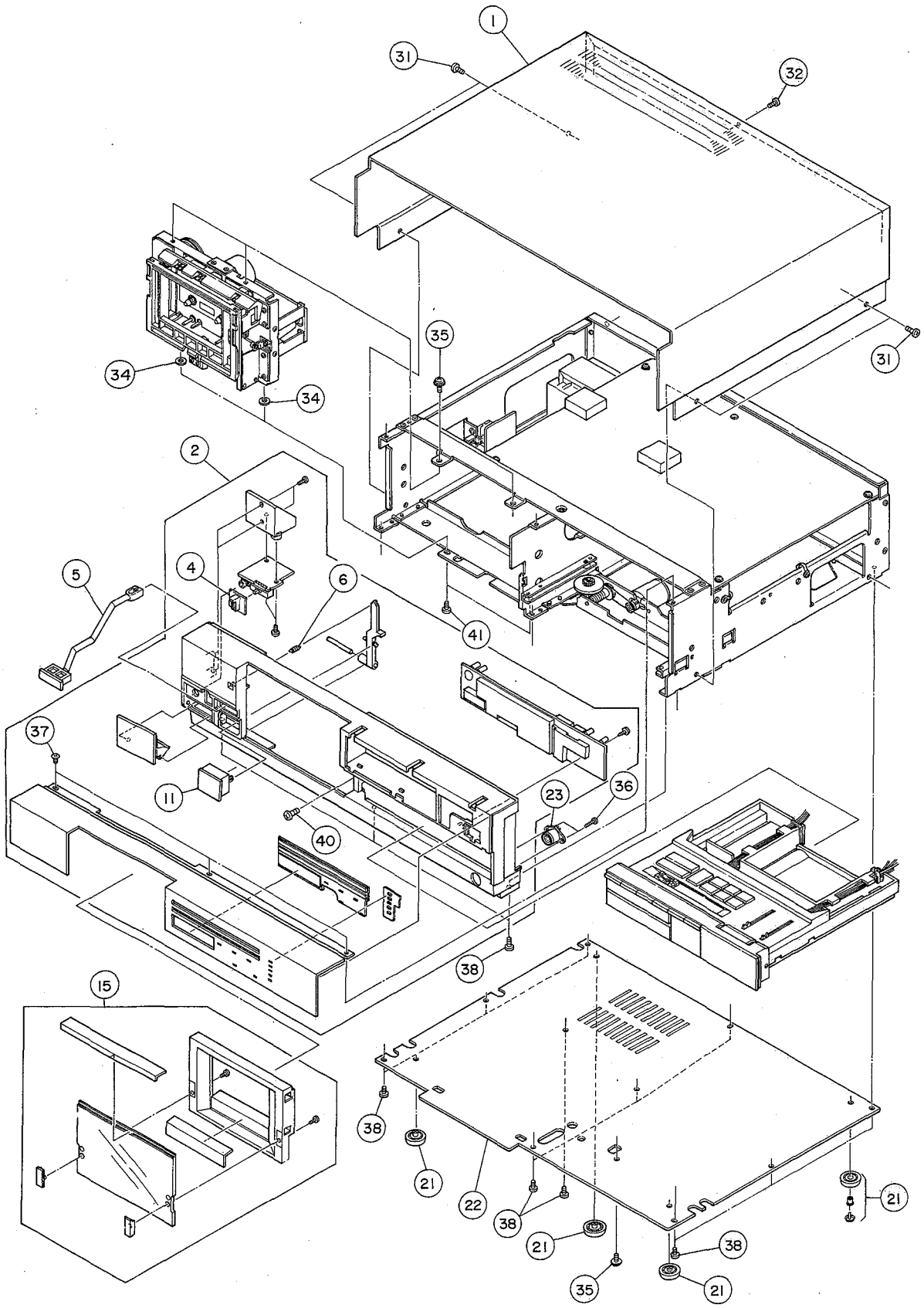

REF. NO.	PARTS NO.	DESCRIPTION	COMMON MODELS	REMARKS
1 - 1	*5800583901	Cover, Top; B		
1 - 2	*5640053500	Panel Assy, Front		
1 - 4	5800589100	Knob, Timer		
1 - 5	5800608900	Button Assy, Power; B		
1 - 6	5800589401	Spring, Eject		
1 -11	5800608701	Button Assy, Eject; B		
1 -15	*5640053700	Window Assy, Cassette		
1 -21	*5800268000	Foot	V-77C	
1 -22	*5800593002	Cover, Bottom		
1 -23	5334027500	Connector Socket, 4P		
1 -31	*5800612400	Screw, Top Cover; M3X8	V360C	
1 -32	*5783593006	Screw, Taptite; M3X6		
1 -34	*5785013000	Washer, Flat; ϕ3.3Xϕ8X0.5t		
1 -35	*5783073006	Screw, Washer Head Taptite; M3X6		
1 -36	*5781112008	Screw, Binding Head Tapping; M2X8		
1 -37	*5783043005	Screw, Flat Countersunk Head Taptite; M3X5		
1 -38	*5783003005	Screw, Pan Head Taptite; M3X5		
1 -40	*5783522612	Screw, Pan Head Taptite; M2.6X12 (BLK Ni)		
1 -41	*5783033005	Screw, Binding Head Taptite; M3X5		

INCLUDED ACCESSORIES (R-777X)

REF. NO.	PARTS NO.	DESCRIPTION	REMARKS
	*5350011600	Cord, Input-output Connection	
	*5744043100	Remote Control Unit, RC-205 [GE]	
	*5700057200	R-777X Owner's Manual [J]	
	*5700057300	R-777X Owner's Manual [All except J]	

Parts marked with* require longer delivery time.

[US] : U.S.A. [C] : CANADA [GE] : GENERAL EXPORT [E]: EUROPE
[A] : AUSTRALIA [J] : JAPAN

EXPLODED VIEW-2 (R-777X)

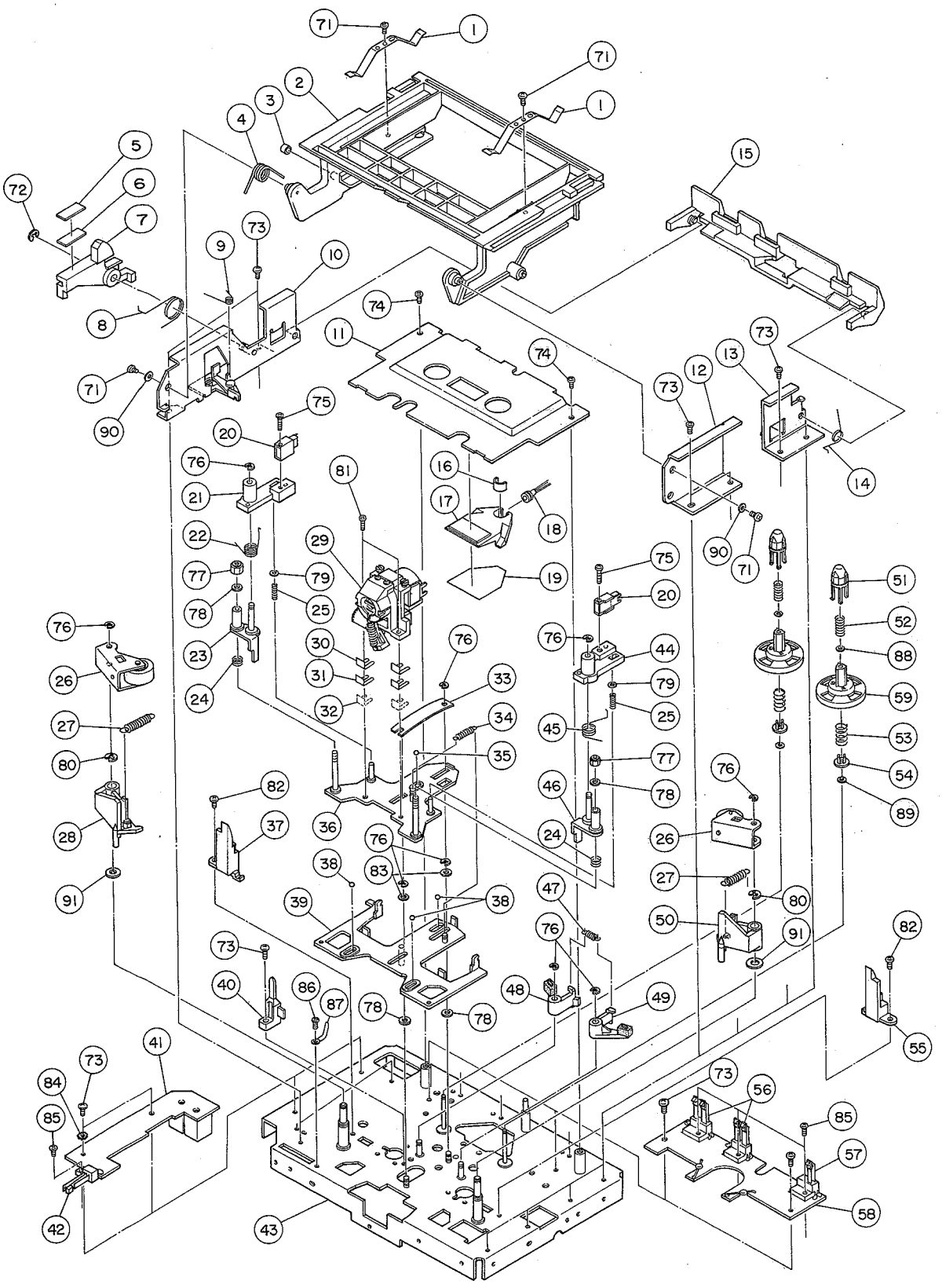

REF. NO.	PARTS NO.	DESCRIPTION	COMMON MODELS	REMARKS
2 - 1	5800616500	Spring, Cassette Pressure		
2 - 2	*5800620100	Holder Assy, Cassette		
2 - 3	5800126401	Shoe, Brake	V-9	
2 - 4	5800616200	Spring, Cassette Holder		
2 - 5	*5800671100	Plate, Spacer; 2 mm		
2 - 6	*5800671001	Plate, Spacer; 1.2 mm		
2 - 7	*5800596300	Lever, Cassette Lock		
2 - 8	5800616300	Spring, Cassette Lock Lever		
2 - 9	5800616400	Spring, Eject Preventing Plate		
2 -10	*5800620200	Bracket Assy, Holder; L		
2 -11	*5800593700	Panel, Cassette		
2 -12	*5800593900	Bracket, Holder; R		
2 -13	*5800594000	Bracket, R		
2 -14	5800616600	Spring, Switch Pressure Arm		
2 -15	*5800595600	Arm, Switch Pressure		
2 -16	5800423303	Filter, Lamp	Z-6000	
2 -17	5800596200	Lens, Cassette		
2 -18	5310006500	Lamp, DC12V		
2 -19	5800617700	Paper, Reflection		
2 -20	5378901700	Head, Erase		
2 -21	5800597600	Bracket, Erase Head; L		
2 -22	5800615500	Spring, Erase Head Arm; L		
2 -23	*5800618700	Arm Assy, Erase Head; L		
2 -24	*5800615300	Spring, Erase Head; Hight Adj.		
2 -25	*5800615700	Spring, Erase Head Arm Guide		
2 -26	5800618900	Arm Assy, Pinch Roller		
2 -27	5800615800	Spring, Pinch Roller Arm		
2 -28	*5800596700	Arm, Pinch Roller; L		
2 -29	5800618400	Head Assy, 2		
2 -30	5800595000	Spacer, A; 0.1 mm		
2 -31	5800595100	Spacer, B; 0.2 mm		
2 -32	5800595200	Spacer, C; 0.28 mm		
2 -33	*5800595500	Spring, Pressure		
2 -34	5800615400	Spring, Head Base		
2 -35	5540055000	Steel Ball, $\phi 2$	A-450	
2 -36	5800618100	Plate Assy, Head Base		
2 -37	*5800595700	Guide, Cassette; L		
2 -38	5540056000	Steel Ball, $\phi 3$	A-450	
2 -39	*5800618201	Plate Assy, Slider		
2 -40	5228009900	Sensor, Phote		
2 -41	*5200151200	PCB Assy, JOINT		
2 -42	5301753400	Switch, Leaf; LSC-1223-21		
2 -43	*5800618000	Chassis Assy, Mechanism; B		
2 -44	*5800597700	Bracket, Erase Head; R		
2 -45	5800615600	Spring, Erase Head Arm; R		
2 -46	*5800618800	Arm Assy, Erase Head; R		
2 -47	*5800616100	Spring, Brake		
2 -48	*5800620000	Arm Assy, Brake; L		
2 -49	*5800619900	Arm Assy, Brake; R		
2 -50	*5800596800	Arm, Pinch Roller; R		
2 -51	5800236501	Ring, Drive		
2 -52	5800231300	Spring, Reel	V-70C	
2 -53	5800481901	Spring, Back Tension	Z-5000	
2 -54	5800231500	Holder, Spring	V-70C	
2 -55	*5800595800	Guide, Cassette; R		
2 -56	5301753500	Switch, Leaf; LSA-2125		
2 -57	5301753600	Switch, Leaf; LSA-1125-7		
2 -58	*5200151100	PCB Assy, SENSOR		
2 -59	5800619500	Table Assy, Reel		
2 -71	*5781112004	Screw, Binding Head Tapping; M2X4		
2 -72	*5786003000	E-Ring, E-3		
2 -73	*5783002605	Screw, Pan Head Taptite; M2.6X5		
2 -74	*5780122605	Screw, Binding Head; M2.6X5 (BLK)		
2 -75	*5780112612	Screw, Pan Head; M2.6X12 (Ni)		

(Continued on page 46)

Parts marked with * require longer delivery time.

EXPLODED VIEW-3 (R-777X)

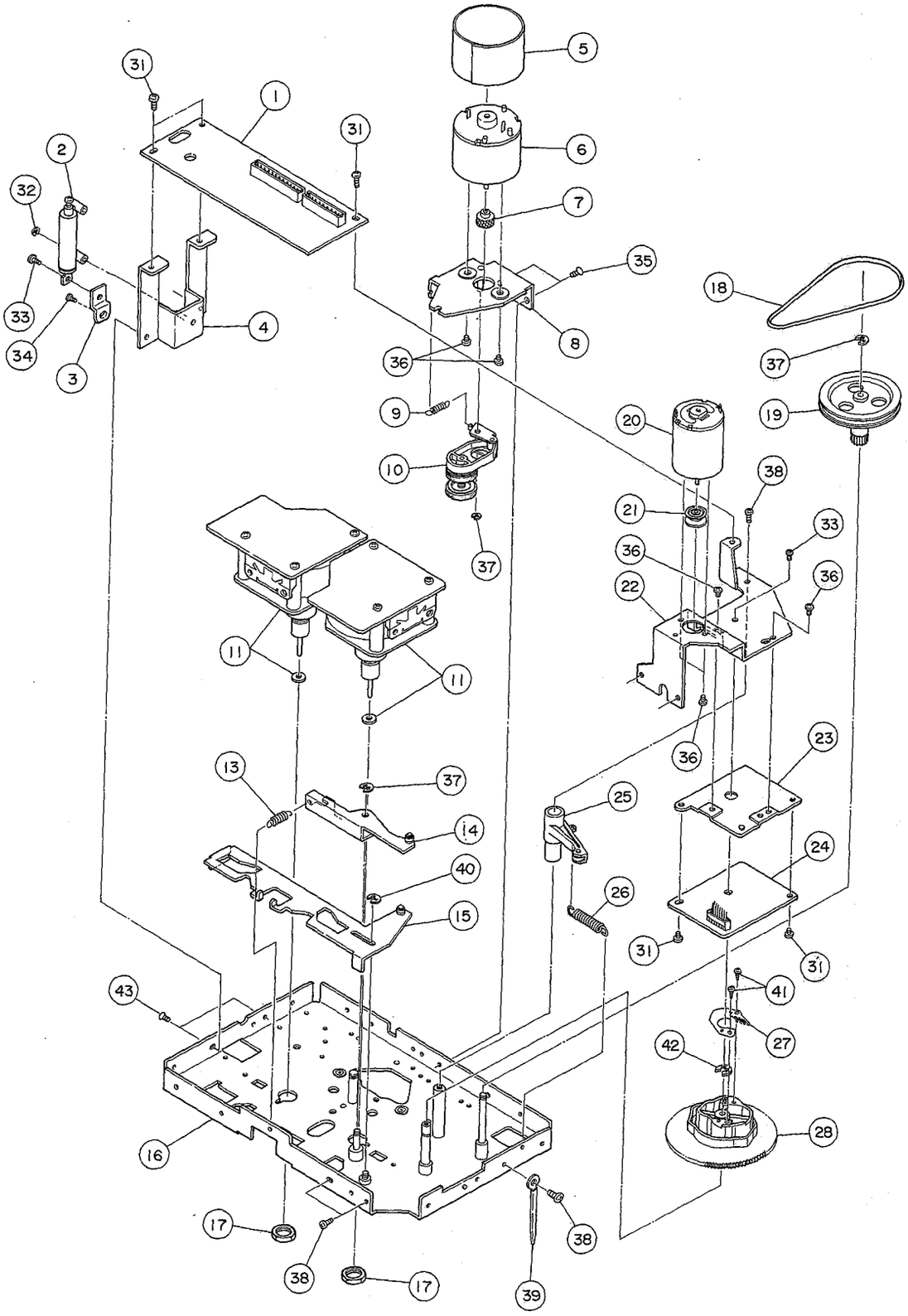

REF. NO.	PARTS NO.	DESCRIPTION	COMMON MODELS	REMARKS
3 - 1	*5200151500	PCB Assy, MECHANISM		
3 - 2	5800642100	Damper Assy		
3 - 3	*5800594300	Plate, Damper Joint		
3 - 4	*5800620300	Bracket Assy, Damper		
3 - 5	*5800235900	Plate, Shield	F-1RX	
3 - 6	5370002502	Motor, Reel; DC	V-70C	
3 - 7	5800617500	Pulley, Motor		
3 - 8	*5800619400	Bracket Assy, Reel Motor		
3 - 9	5800115800	Spring, Idler Arm	V-9	
3 -10	5800619600	Idler Assy		
3 -11	5370005000	Motor, Capstan; DC		
3 -12		(Not used)		
3 -13	*5800615900	Spring, Head Base Arm		
3 -14	*5800620700	Arm Assy, Head Base		
3 -15	*5800620800	Lever Assy, Change		
3 -16	*5800618000	Chassis Assy, Mechanism; B		
3 -17	*5800442300	Nut	Z-6000	
3 -18	5800597900	Belt, Control Motor		
3 -19	5800597000	Pulley, Reduction		
3 -20	5370005100	Motor, Control; DC		
3 -21	5800617300	Pulley, V		
3 -22	*5800594701	Bracket, Motor		
3 -23	*5800594100	Bracket, PCB		
3 -24	*5210152400	PCB, CAM		
3 -25	*5800619000	Arm Assy, Balance		
3 -26	*5800616000	Spring, Balance Arm		
3 -27	*5800595300	Plate, Contact		
3 -28	5800597400	Cam, Control		
3 -31	*5783032605	Screw, Binding Head Taptite; M2.6X5		
3 -32	*5786001500	E-Ring, E-1.5		
3 -33	*5780002004	Screw, Binding Head; M2X4		
3 -34	*5781112004	Screw, Binding Head Tapping; M2X4		
3 -35	*5783042605	Screw, Flat Countersunk Head Taptite M2.6X5		
3 -36	*5780002603	Screw, Binding Head; M2.6X3		
3 -37	*5786002000	E-Ring, E-2		
3 -38	*5783002605	Screw, Pan Head Taptite; M2.6X5		
3 -39	*5786713000	Clamper, Cord; ϕ3		
3 -40	*5786010900	E-Ring, E-9		
3 -41	*5781112004	Screw, Binding Head Tapping; M2X4		
3 -42	*5786003000	E-Ring, E-3		
3 -43	*5783042605	Screw, Flat Countersunk Head Taptite; M2.6X5		

Parts marked with * require longer delivery time.

EXPLODED VIEW-4 (R-777X)

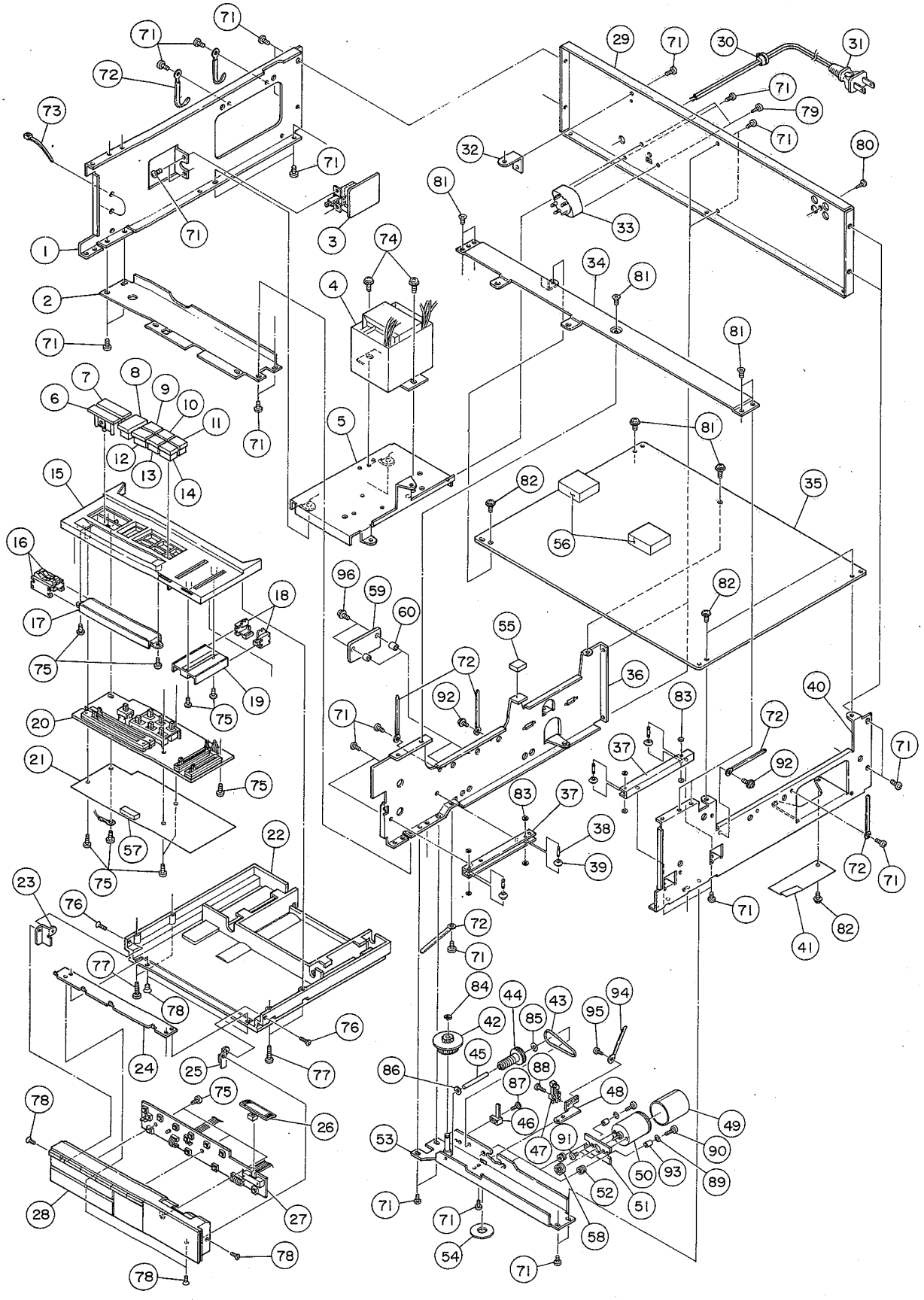

REF. NO.	PARTS NO.	DESCRIPTION	COMMON MODELS	REMARKS
4 - 1	*5800584200	Chassis, Side; A		
4 - 2	*5800592400	Bracket, Mechanism; A		
4 - 3	*5200151900	PCB Assy, POWER SW [J]		
	*5200151910	PCB Assy, POWER SW [US]		
	*5200151920	PCB Assy, POWER SW [C]		
	*5200151930	PCB Assy, POWER SW [GE]		
	*5200151940	PCB Assy, POWER SW [E, A]		
4 - 4	⚠ 5320022100	Transformer, Power [J]		
	⚠ 5320022200	Transformer, Power [US]		
	⚠ 5320022300	Transformer, Power [GE]		
	⚠ 5320022400	Transformer, Power [E, A]		
	⚠ 5320022500	Transformer, Power [C]		
4 - 5	*5800591801	Bracket, Transformer		
4 - 6	5800583301	Button, PAUSE		
4 - 7	5800583201	Button, REC		
4 - 8	5800583101	Button, D		
4 - 9	5800582801	Button, A; OUT		
4 -10	5800583001	Button, C; dbx		
4 -11	5800585401	Button, B; dbx DISC		
4 -12	5800582901	Button, B; □□ B		
4 -13	5800585501	Button, ; □□ C		
4 -14	5800585301	Button, A; MPX FIL		
4 -15	*5800584701	Box, Control; B		
4 -16	5800621200	Knob Assy, Slide VR		
4 -17	*5800583400	Rail, VR Knob		
4 -18	5800592100	Knob, Slide VR; B		
4 -19	*5800590901	Rail, VR Knob; B		
4 -20	*5200151600	PCB Assy, VR		
4 -21	*5800606300	Plate, Shield; B		
4 -22	*5800584802	Box, Control; C		
4 -23	*5800588700	Bracket, L		
4 -24	*5800591200	Bracket, A		
4 -25	*5800588800	Bracket, R		
4 -26	5800592200	Knob, Mode SW		
4 -27	*5200151701	PCB Assy, SW		
4 -28	5800609101	Box Assy, Control; DB		
4 -29	*5800584501	Panel, Rear		
4 -30	⚠*5534660000	Bushing, Cord; 4N-4		
4 -31	⚠*5128027000	Cord, AC Power [J]		
	⚠*5350008200	Cord, AC Power [E]		
	⚠*5350008300	Cord, AC Power [A]		
	⚠*5350010800	Cord, AC Power [US, C, GE]		
4 -32	*5800249801	Bracket, PCB; B	V-70C	
4 -33	⚠*5302101700	Switch, Voltage Select [GE]		
4 -34	*5800592501	Bracket, Mechanism; B		
4 -35	*5200150802	PCB Assy, MAIN [J, US, C, GE]		
	*5200150812	PCB Assy, MAIN [E, A]		
4 -36	*5800584302	Chassis, Side; B		
4 -37	*5800590800	Holder, Roller		
4 -38	*5800591001	Shaft, Roller		
4 -39	*5800590000	Roller		
4 -40	*5800584402	Chassis, Side; C		
4 -41	*5800659600	Cover, Wire		
4 -42	5800608400	Gear Assy		
4 -43	5800591300	Belt, Control		
4 -44	5800669800	Worm Assy		
4 -45	*5800591400	Shaft, A		
4 -46	5301753300	Switch, Leaf; LSB-1123-40		
4 -47	5302102900	Switch, Skeleton; 2KD-12AR		
4 -48	*5800588401	Bracket, SW		
4 -49	*5800589300	Plate, Shield		
4 -50	5370005100	Motor, DC		

(Continued on page 48)

Parts marked with * require longer delivery time.

[US] : U.S.A. [C] : CANADA [GE] : GENERAL EXPORT [E] : EUROPE
[A] : AUSTRALIA [J] : JAPAN

(Continued from page 33)

EXPLODED VIEW-2 (R-999X)

REF. NO.	PARTS NO.	DESCRIPTION	COMMON MODELS	REMARKS
2 -76	*5786002000	E-Ring, E-2		
2 -77	*5781952600	Nut, M2.6		
2 -78	*5785313000	Washer, Poly.; ϕ3Xϕ6X0.5t		
2 -79	*5785302400	Washer, Poly.; ϕ2.1Xϕ5X0.25t		
2 -80	*5786002500	E-Ring, E-2.5		
2 -81	*5780002006	Screw, Binding Head; M2X6		
2 -82	*5783032604	Screw, Binding Head Taptite; M2.6X4		
2 -83	*5785303100	Washer, Poly.; ϕ3Xϕ6X0.25t		
2 -84	*5785122600	Water, Lock; ϕ2.6		
2 -85	*5783032005	Screw, Binding Head Taptite; M2X5		
2 -86	*5783002004	Screw, Pan Head Taptite; M2X4		
2 -87	*5786710100	Clamper, Cord; ϕ2		
2 -88	*5785012000	Washer, Flat; ϕ2X0.4t		
2 -89	*5785304100	Washer, Poly.; ϕ4.1Xϕ6.5X0.25t		

Parts marked with * require longer delivery time.

(Continued from page 41)

EXPLODED VIEW-2 (R-777X)

REF. NO.	PARTS NO.	DESCRIPTION	COMMON MODELS	REMARKS
2 -76	*5786002000	E-Ring, E-2		
2 -77	*5781952600	Nut, M2.6		
2 -78	*5785313000	Washer, Poly.; ϕ3Xϕ6X0.5t		
2 -79	*5785302400	Washer, Poly.; ϕ2.1Xϕ5X0.25t		
2 -80	*5786002500	E-Rin, E-2.5		
2 -81	*5780002006	Screw, Binding Head; M2X6		
2 -82	*5783032604	Screw, Binding Head Taptite; M2.6X4		
2 -83	*5785303100	Washer, Poly.; ϕ3Xϕ6X0.25t		
2 -84	*5785122600	Washer, Lock; ϕ2.6		
2 -85	*5780002005	Screw, Binding Head; M2X5		
2 -86	*5783002004	Screw, Pan Head Taptite; M2X4		
2 -87	*5786710100	Clamper, Cord; ϕ2		
2 -88	*5785331100	Washer, Poly; ϕ1.2Xϕ3.6X0.5t (Cut)		
2 -89	*5800539800	Washer, Teflon; ϕ1.7Xϕ4X0.3t		
2 -90	*5785012000	Washer, Flat; ϕ2X0.4t		
2 -91	*5785304100	Washer, Poly; ϕ4.1Xϕ6.5X0.25t		

Parts marked with * require longer delivery time.

(Continued from page 37)

EXPLODED VIEW-4 (R-999X)

REF. NO.	PARTS NO.	DESCRIPTION	COMMON MODELS	REMARKS
4 -50	*5800584302	Chassis, Side; B	R-777X	
4 -51	*5800590800	Holder, Roller	R-777X	
4 -52	*5800591001	Shaft, Roller	R-777X	
4 -53	*5800590000	Roller	R-777X	
4 -54	*5800584402	Chassis, Side; C	R-777X	
4 -55	*5200089010	PCB Assy, DBX		
4 -56	*5800606200	Cover, PCB		
4 -57	*5534878000	Rivet, Push; RP-3545-NB		
4 -58	5800608400	Gear Assy	R-777X	
4 -59	5800591300	Belt, Control	R-777X	
4 -60	5800669800	Worm Assy	R-777X	
4 -61	*5800591400	Shaft, A	R-777X	
4 -62	5301753300	Switch, Leaf; LSB-1123-40		
4 -63	5302102900	Switch, Skeleton; 2KD-12AR		
4 -64	*5800588401	Bracket, SW	R-777X	
4 -65	*5800589300	Plate, Shield	R-777X	
4 -66	5370005100	Motor, DC	R-777X	
4 -67	*5800674000	Plate, Motor	R-777X	
4 -68	*5534537000	Cushion, Rubber	A-206	
4 -69	5800617300	Pulley, V	R-777X	
4 -70	*5800591502	Bracket Assy, Gear	R-777X	
4 -71	*5800590200	Cushion, Felt	R-777X	
4 -72	*5800539800	Washer, teflon; ϕ1.7Xϕ4X0.3t	R-777X	
4 -73	*5800677800	Cushion, Knob		
4 -74	*5800678400	Cover, PCB; B		
4 -81	*5783003005	Screw, Pan Head Taptite; M3X5		
4 -82	*5786713000	Clamper, Cord; ϕ3		
4 -83	*5786720100	Band, Cable; 8432		
4 -84	*5783074008	Screw, Washer Head Taptite; M4X8		
4 -85	*5780002608	Screw, Binding Head; M2.6X8		
4 -86	*5033295000	Tube, Insul.		
4 -87	*5033291000	Plate, Insul.; IS-313D		
4 -88	*5781112608	Screw, Binding Head Tapping; M2.6X8		
4 -89	*5780202006	Screw, Flat Countersunk Head; M2X6		
4 -90	*5781012616	Screw, Pan Head Tapping; M2.6X16		
4 -91	*5780202004	Screw, Flat Countersunk Head; M2X4		
4 -92	*5781113006	Screw, Binding Head Tapping; M3X6		
4 -93	*5781113008	Screw, Binding Head Tapping; M3X8		
4 -94	*5783043005	Screw, Flat Countersunk Head Taptite; M3X5		
4 -95	*5783073006	Screw, Washer Head Taptite; M3X6		
4 -96	*5783073012	Screw, Washer Head Taptite; M3X12		
4 -97	*5785331100	Washer, Poly.; ϕ1.2Xϕ3.6X0.5t (Cut)		
4 -98	*5786002500	E-Ring, E-2.5		
4 -99	*5785302100	Washer, Poly.; ϕ2.5Xϕ9X0.25t		
4-100	*5785602650	Spacer, ϕ2.6X5 mm		
4-101	*5785003000	Washer, Flat; ϕ3.3Xϕ6X0.5t		
4-102	*5783002608	Screw, Pan Head Taptite; M2.6X8		
4-103	*5780002006	Screw, Binding Head; M2X6		
4-104	*5780002005	Screw, Binding Head; M2X5		
4-105	*5780002004	Screw, Binding Head; M2X4		
4-106	*5581062000	Clamper, Cord; E		
4-107	*5785123000	Washer, Lock; ϕ3		
4-108	*5783073008	Screw, Washer Head Taptite; M3X8		
4-109	*5780102603	Screw, Pan Head; M2.6X3		

Parts marked with * require longer delivery time.

(Continued from page 45)

EXPLODED VIEW-4 (R-777X)

REF. NO.	PARTS NO.	DESCRIPTION	COMMON MODELS	REMARKS
4 -51	*5800674000	Plate, Motor		
4 -52	*5534537000	Cushion, Rubber	A-206	
4 -53	*5800591501	Bracket Assy, Gear		
4 -54	*5800590200	Cushion, Felt		
4 -55	*5800673700	Cushion, B		
4 -56	*5800673600	Cushion, A		
4 -57	*5800647500	Cushion, Angle	V-330	
4 -58	5800617300	Pulley, V		
4 -59	*5200164800	PCB Assy, SENSE		
4 -60	*5800672900	Collar, ϕ3Xϕ5.5X7t		
4 -71	*5783003005	Screw, Pan Head Taptite; M3X5		
4 -72	*5786713000	Clamper, Cord; ϕ3		
4 -73	*5786720100	Band, Cable; 8432		
4 -74	*5783074008	Screw, Washer Head Taptite; M4X8		
4 -75	*5781112608	Screw, Binding Head Tapping; M2.6X8		
4 -76	*5780202006	Screw, Flat Countersunk Head; M2X6		
4 -77	*5781012616	Screw, Pan Head Tapping; M2.6X16		
4 -78	*5780202004	Screw, Flat Countersunk Head; M2X4		
4 -79	*5781113006	Screw, Binding Head Tapping; M3X6		
4 -80	*5781113008	Screw, Binding Head Tapping; M3X8		
4 -81	*5783043005	Screw, Flat Countersunk Head Taptite; M3X5		
4 -82	*5783073006	Screw, Washer Head Taptite; M3X6		
4 -83	*5785331100	Washer, Poly.; ϕ1.2Xϕ3.6X0.5t (Cut)		
4 -84	*5786002500	E-Ring, E-2.5		
4 -85	*5800539800	Washer, Teflon; ϕ1.7Xϕ4X0.3t		
4 -86	*5785302100	Washer, Poly; ϕ2.5Xϕ9X0.25t		
4 -87	*5780002006	Screw, Binding Head; M2X6		
4 -88	*5780002005	Screw, Binding Head; M2X5		
4 -89	*5785003000	Washer, Flat; ϕ3.3Xϕ6X0.5t		
4 -90	*5783002608	Screw, Pan Head Taptite; M2.6X8		
4 -91	*5780102603	Screw, Pan Head; M2.6X3		
4 -92	*5783073008	Screw, Washer Head Taptite; M3X8		
4 -93	*5785602650	Spacer, ϕ2.6X5 mm		
4 -94	*5581062000	Clamper, Cord; E		
4 -95	*5780002004	Screw, Binding Head; M2X4		
4 -96	*5783073012	Screw, Washer Head Taptite; M3X12		

Parts marked with * require longer delivery time.

7 PC BOARDS AND PARTS LIST

基板図とパーツ・リスト

MAIN PCB ASSY (R-999X)

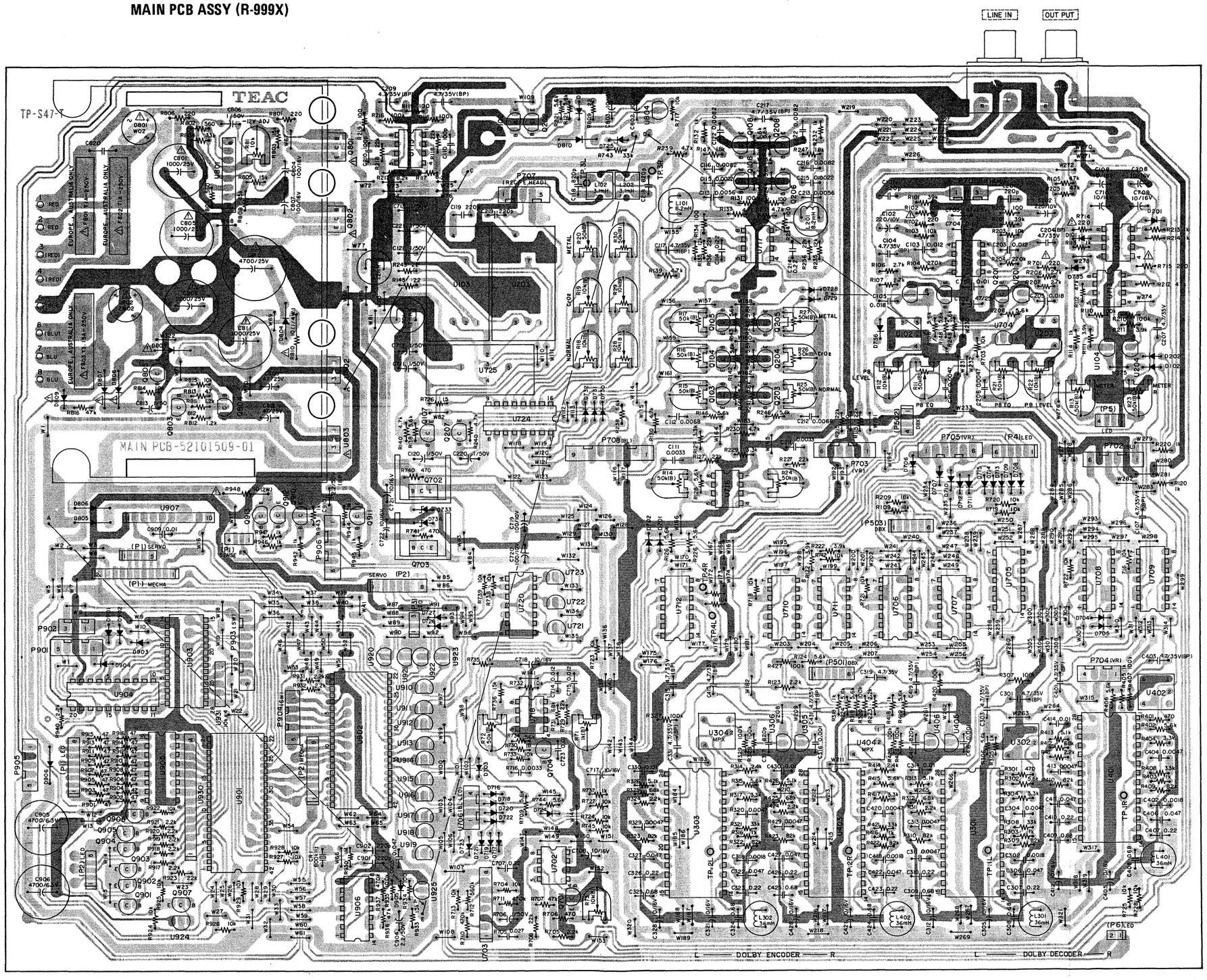

DBX PCB ASSY (R-999X)

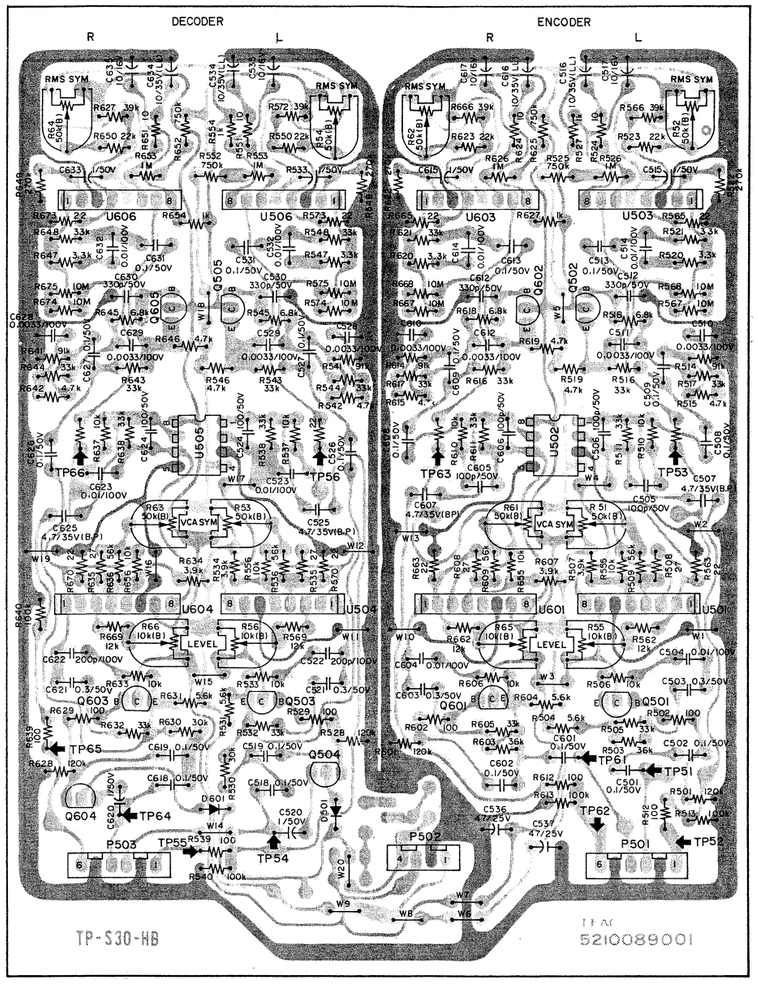

SERVO PCB ASSY (R-999X)

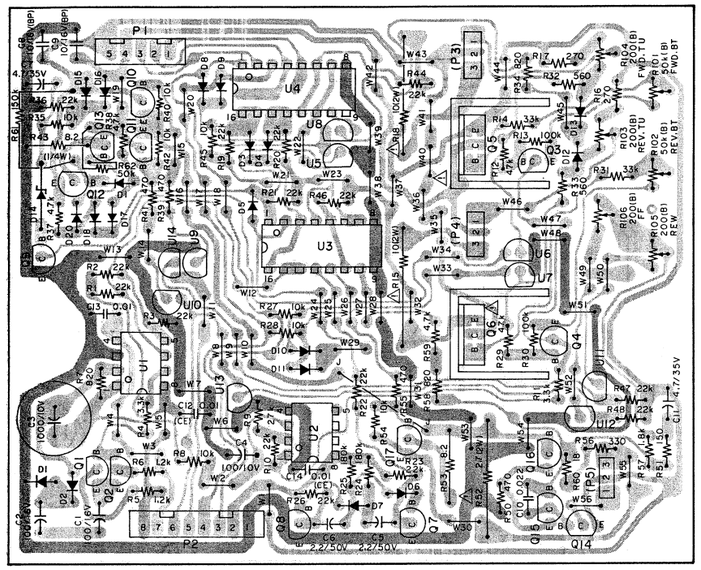

BL PCB ASSY (R-999X)

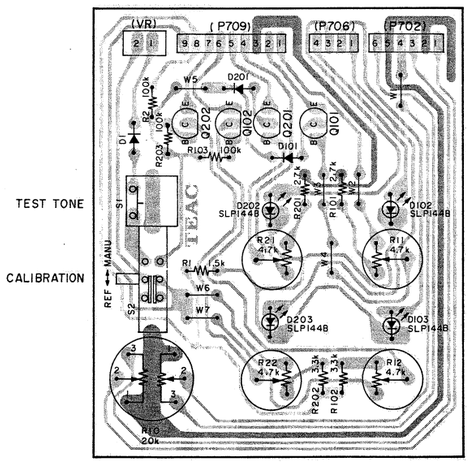

TR PCB ASSY (1) (R-999X)

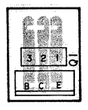

TR PCB ASSY (2) (R-999X)

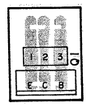

NOTES

1. PC boards are shown viewed from foil side.
2. The colors on the PC board illustrations have the following significance:
   - : +B power supply circuit
   - : −B power supply circuit
   - : GND
   - : other
3. Resistor values are in ohms (k=kilo-ohms M=megohms).
4. All capacitor values are in microfarads (p=picofarads).
5. ⚠ Parts marked with this sign are safety critical components. They must always be replaced with identical components. Refer to the appropriate parts list to ensure exact replacement.

注

1. 基板図はパターン面が示されています.
2. プリント・パターンは次のように色別されています.
   - ：＋B電源回路
   - ：－B電源回路
   - ：GND
   - ：その他の回路
3. 抵抗の単位はΩ(k＝kΩ、M＝MΩ)です.
4. コンデンサの単位はμF(p＝pF)です.
5. ⚠マークのある部品は安全重要部品です.
   交換するときは必ずティアック指定の部品を使用してください.

MAIN PCB ASSY (R-777X)

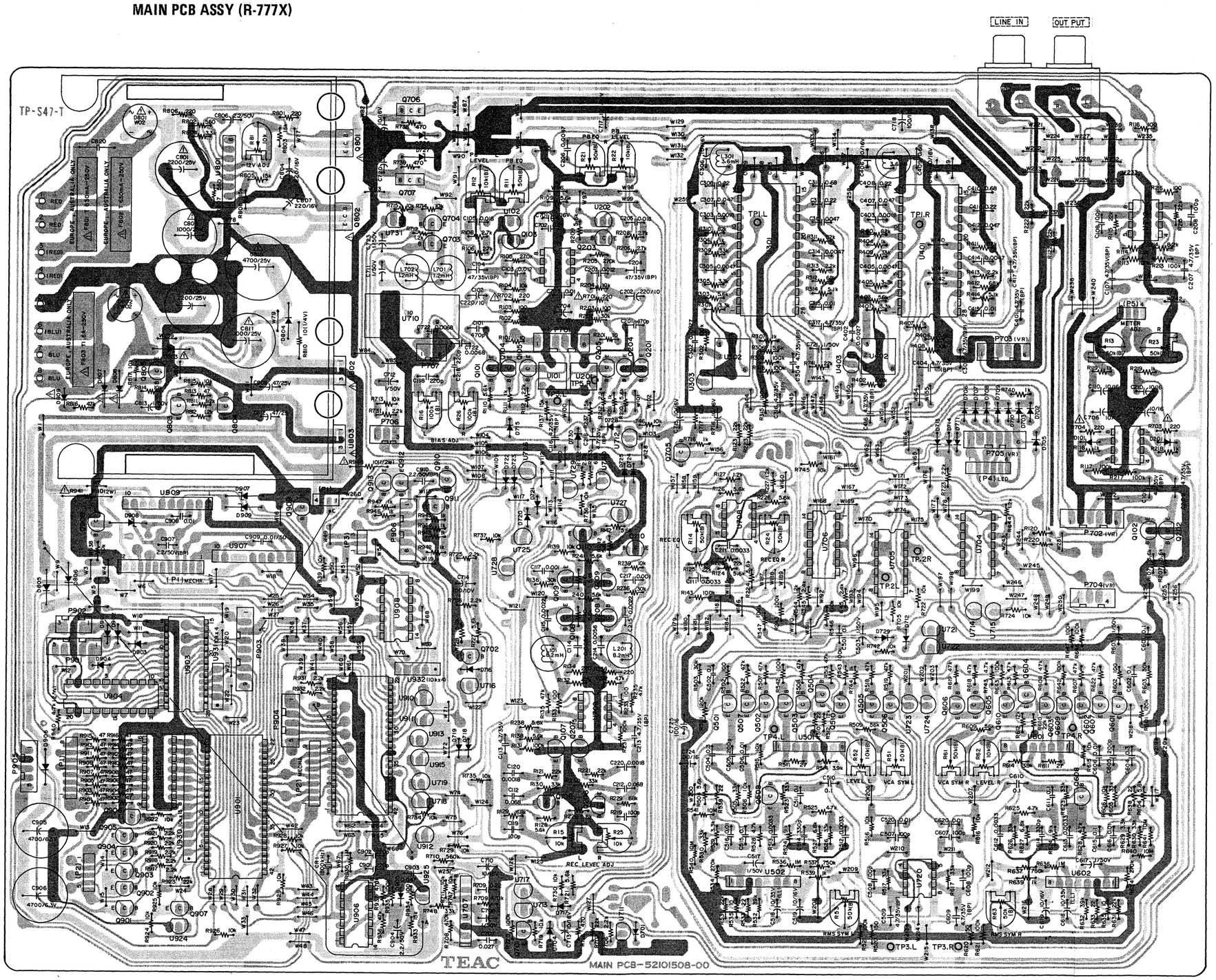

SW PCB ASSY (R-999X/R-777X)

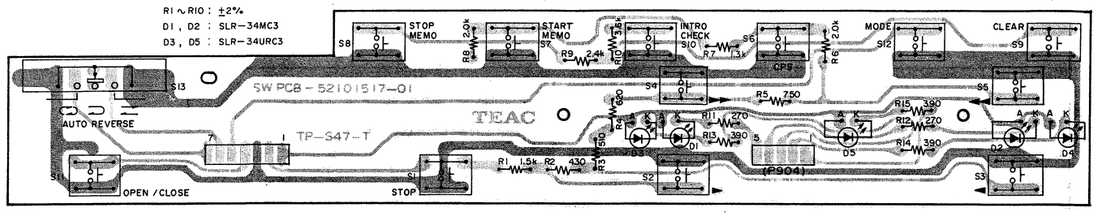

SENSE PCB ASSY (R-999X/R-777X)

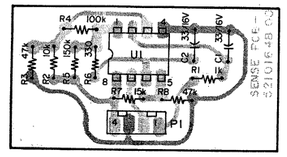

TIMER PCB ASSY (R-999X/R-777X)

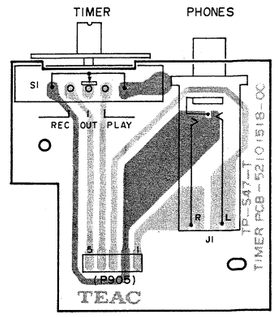

VR PCB ASSY (R-999X/R-777X)

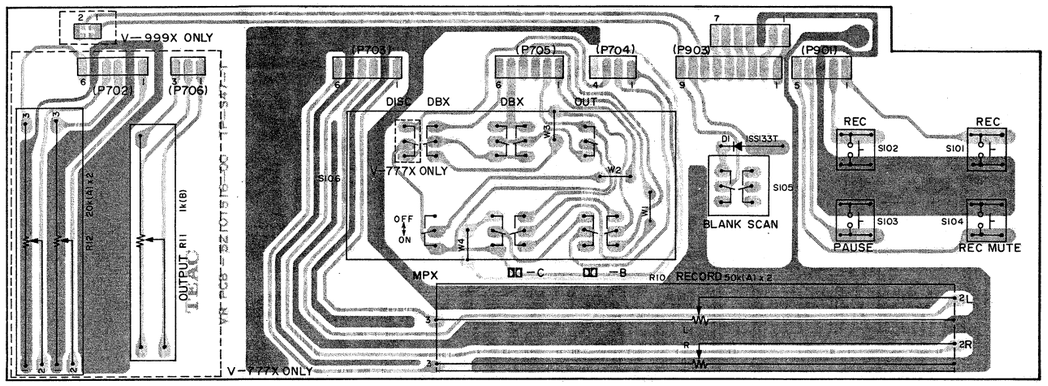

JOINT PCB ASSY (R-999X/R-777X)

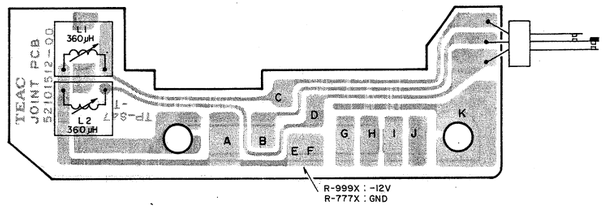

MECHANISM PCB ASSY (R-999X/R-777X)

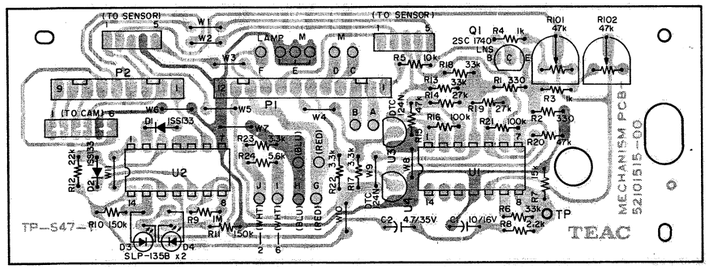

SENSOR PCB ASSY (R-999X/R-777X)

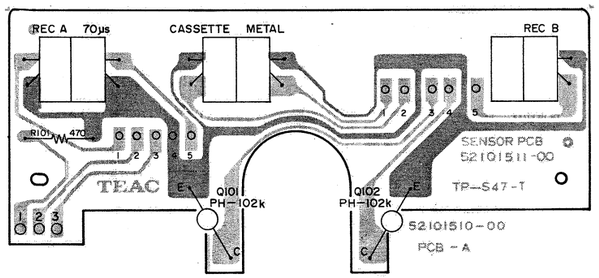

MAIN PCB ASSY (R-999X)

REF. NO.	PARTS NO.	DESCRIPTION
	*5200150901	PCB Assy [US, C, J, GE]
	*5200150911	PCB Assy (E, A]
	*5210150901	PCB
	IC's	
U301, U401	5220423200	TEA0665
U303, U403	5220423200	TEA0665
U701	5220412500	NJM4562DD
U702	5220418800	M5218P
U703	5220426200	M51143AL
U705~U712	5220021600	M4066BP
U713, U714	5220418800	M5218P
U715	5220414400	NJM4556D
U716~U718	5220418800	M5218P
U720	5220015900	HD14011BP
U801	5220425800	M5230L-A
U802	⚠5220423400	L7812
U803	⚠5220423500	L78L06
U901	5220805300	LM6402H-421
U902	5220805400	LM6402H-422
U903	5220019700	LC7800
U904	5220020500	LB1475
U906	5220015900	HD14011BP
U907	5220411500	BA6109
	DIGITAL TRANSISTORS	
U101, U201	5232251200	DTC-124N
U104, U204	5232251200	DTC-124N
U305, U405	5232251200	DTC-124N
U306, U406	5232251200	DTC-124N
U704	5232251200	DTC-124N
U721~U723	5232251100	DTA-124N
U724	5232252300	Transistor array LB1214
U804	5232251100	DTA-124N
U905	5232252300	Transistor array LB1214
U910~U923	5232251100	DTA-124N
U924, U925	5232251200	DTC-124N
	TRANSISTORS	
Q101, Q201	5145092000	2SC1740LNS
Q102, Q202	5230775000	2SC2878B
Q103, Q203	5145092000	2SC1740LNS
Q104, Q204	5145092000	2SC1740LNS
Q105, Q205	5145092000	2SC1740LNS
Q106, Q206	5145092000	2SC1740LNS
Q107, Q207	5231758500	2SD1140
Q108, Q208	5145092000	2SC1740LNS
Q701	5145092000	2SC1740LNS
Q702	5145087000	2SD313E
Q703	5145129000	2SB507E
Q704	5230775000	2SC2878B
Q801	⚠5145129000	2SB507E
Q802	⚠5145087000	2SD313E
Q803	5231761300	2SD734F
Q804, Q805	5145092000	2SC1740LNS

REF. NO.	PARTS NO.	DESCRIPTION
Q901~Q905	5230508400	2SB698F
Q906	5145092000	2SC1740LNS
Q907	5145132000	2SA933LNS
Q910, Q911	5231761300	2SD734F
Q912, Q913	5230508400	2SB698F
	DIODES	
D101, D201	5224015020	1SS133T-77
D102, D202	5224015020	1SS133T-77
D701~732	5224015020	1SS133T-77
D733, D734	5224541801	Zener RD8.2EB2
D735, D736	5224015020	1SS133T-77
D801	⚠5228005000	W02
D802	⚠5228008700	2W02
D803~D808	⚠5224013210	DS135D
D809	⚠5224015020	1SS133T-77
D810	5224013210	DS135D
D811	5224015020	1SS133T-77
D901~D905	5224015020	1SS133T-77
D906	5224013210	DS135D
	CARBON RESISTORS All resistors are rated ±5% tolerance, 1/8 W and of carbon type unless otherwise noted.	
R101, R201	5240032020	39kΩ
R102, R202	5240025820	100Ω
R103, R203	5240030620	10kΩ
R104, R204	5240034020	270kΩ
R105, R205	5240032220	47kΩ
R106, R206	5240029220	2.7kΩ
R107, R207	5240029220	2.7kΩ
R108, R208	5240030020	5.6kΩ
R109, R209	5240031220	18kΩ
R110, R210	5240033020	100kΩ
R111, R211	5240029620	3.9kΩ
R112, R212	5240032220	47kΩ
R113, R213	5240028220	1kΩ
R114, R214	5240028220	1kΩ
R115, R215	5240031420	22kΩ
R116, R216	5240033020	100kΩ
R117, R217	5240030420	8.2kΩ
R118, R218	5240031420	22kΩ
R119, R219	5240025820	100Ω
R120, R220	5240028220	1kΩ
R121, R221	5240030020	5.6kΩ
R122, R222	5240029620	3.9kΩ
R123, R223	5240029020	2.2kΩ
R124, R224	5240033020	100kΩ
R125, R225	5240030620	10kΩ
R126, R226	5240030020	5.6kΩ
R127, R227	5240031420	22kΩ
R128, R228	5240030020	5.6kΩ
R129, R229	5240029420	3.3kΩ
R130, R230	5240029820	4.7kΩ
R131, R231	5240025820	100Ω
R132, R232	5240028220	1kΩ
R133, R233	5240029820	4.7kΩ
R134, R234	5240025820	100Ω
R135, R235	5240030820	12kΩ

Parts marked with * require longer delivery time.

[US] : U.S.A [C] : CANADA [GE] : GENERAL EXPORT
[E] : EUROPE [A] : AUSTRALIA [J] : JAPAN

REF. NO.	PARTS NO.	DESCRIPTION
R136, R236	5240031420	22kΩ
R137, R237	5240030020	5.6kΩ
R138, R238	5240030020	5.6kΩ
R139, R239	5240029820	4.7kΩ
R140, R240	5240029820	4.7kΩ
R141, R241	5240030020	5.6kΩ
R142, R242	5240030020	5.6kΩ
R143, R243	5240030020	5.6kΩ
R144, R244	5240030020	5.6kΩ
R145, R245	5240024220	22Ω
R146, R246	5240030020	5.6kΩ
R147, R247	5240031220	18kΩ
R148, R248	5240030020	5.6kΩ
R301, R401	5240027420	470Ω
R302, R402	5240030020	5.6kΩ
R303, R403	5240028220	1kΩ
R304, R404	5240029420	3.3kΩ
R305, R405	5240028220	1kΩ
R306, R406	5240030020	5.6kΩ
R307, R407	5240033020	100kΩ
R308, R408	5240031820	33kΩ
R309, R409	5240032820	82kΩ
R310, R410	5240032820	82kΩ
R311, R411	5240029020	2.2kΩ
R312, R412	5240032620	68kΩ
R313, R413	5240029920	5.1kΩ
R314, R414	5240029120	2.4kΩ
R315, R415	5240030020	5.6kΩ
R316, R416	5240028220	1kΩ
R317, R417	5240029420	3.3kΩ
R318, R418	5240028220	1kΩ
R319, R419	5240030020	5.6kΩ
R320, R420	5240033020	100kΩ
R321, R421	5240031820	33kΩ
R322, R422	5240032820	82kΩ
R323, R423	5240032820	82kΩ
R324, R424	5240029020	2.2kΩ
R325, R425	5240032620	68kΩ
R326, R426	5240029920	5.1kΩ
R327, R427	5240033020	100kΩ
R328, R429	5240033020	100kΩ
R329, R429	5240033020	100kΩ
R701, R702	5240026620	220Ω
R703, R704	5240030620	10kΩ
R705	5240029020	2.2kΩ
R706	5240027420	470Ω
R707	5240032220	47kΩ
R708	5240031420	22kΩ
R709	5240030020	5.6kΩ
R710, R711	5240034620	470kΩ
R712	5240034820	560kΩ
R713	5240030620	10kΩ
R714, R715	5240026620	220Ω
R716~R725	5240030620	10kΩ
R726	5240023820	15Ω
R727, R728	5240030620	10kΩ
R729	5240031420	22kΩ

REF. NO.	PARTS NO.	DESCRIPTION	
R730	5240024020	18Ω	
R731	5240032620	68kΩ	
R732, R733	5240030620	10kΩ	
R734	5240032420	56kΩ	
R735	5240028220	1kΩ	
R736	5240031020	15kΩ	
R737	5240028220	1kΩ	
R738, R739	5240030620	10kΩ	
R740	5240027420	470Ω	
R741	5240027420	470Ω	
R742	5240030620	10kΩ	
R743	5240031820	33kΩ	
R744	5240030020	5.6kΩ	
R745	5240030620	10kΩ	
R801	5240026620	220Ω	
R802	5240027620	560Ω	
R803	5240031020	15kΩ	
R804	5240029420	3.3kΩ	
R805	5240071020	15kΩ	2%
R806	5240026620	220Ω	
R807	5240027620	560Ω	
R808	5240071020	15kΩ	2%
R809	5240024220	22Ω	
R810	⚠5183554000	10Ω	¼W Nonflammable
R811, R812	5240028420	1.2kΩ	
R813	5240025020	47Ω	
R814, R815	5240030620	10kΩ	
R816	5240032220	47kΩ	
R817	5240030620	10kΩ	
R901~R916	5240025020	47Ω	
R917~R921	5240029020	2.2kΩ	
R922	5240030620	10kΩ	
R923	5240031420	22kΩ	
R924~R929	5240030620	10kΩ	
R930	5240035420	1MΩ	
R931, R932	5240029020	2.2kΩ	
R933	5240031020	15kΩ	
R934	5240025820	100Ω	
R935	5240033020	100kΩ	
R936	5240032220	47kΩ	
R937	5240034620	470kΩ	
R940	5240069820	4.7kΩ	2%
R942~R947	5240028220	1kΩ	
R948	⚠5181974000	1kΩ	½W Nonflammable

CAPACITORS

C101, C201	5263106220	Polypro.	220pF	100V
C102, C202	5260166852	Elec.	220μF	10V
C103, C203	5171858000	Mylar	0.012μF	100V
C104, C204	5260066550	Elec.	4.7μF	35V (BP)
C105, C205	5171862000	Mylar	0.018μF	100V
C106, C206	5170368000	Mylar	0.0047μF	100V
C107, C207	5260066550	Elec.	4.7μF	35V (BP)
C108, C208	5260162550	Elec.	10μF	16V
C109, C209	5260066550	Elec.	4.7μF	35V (BP)
C110, C210	5172212000	Ceramic	100pF	50V
C111, C211	5170364000	Mylar	0.0033μF	100V
C112, C212	5170372000	Mylar	0.0068μF	100V

REF. NO.	PARTS NO.	DESCRIPTION		
C113, C213	5170370000	Mylar	0.0056μF	100V
C114, C214	5263168323	Meta.	0.22μF	50V
C115, C215	5170360000	Mylar	0.0022μF	100V
C116, C216	5170374000	Mylar	0.0082μF	100V
C117, C217	5260066550	Elec.	4.7μF	35V (BP)
C118, C218	5263107620	Polypro.	820pF	100V
C119, C219	5263106220	Polypro.	220pF	100V
C120, C220	5260160750	Elec.	1μF	50V
C121, C221	5260160750	Elec.	1μF	50V
C122, C222	5170374000	Mylar	0.0082μF	100V
C301, C401	5260066550	Elec.	4.7μF	35V (BP)
C302, C402	5170358000	Mylar	0.0018μF	100V
C303, C403	5260066550	Elec.	4.7μF	35V (BP)
C304, C404	5170368000	Mylar	0.0047μF	100V
C305, C405	5260162550	Elec.	10μF	16V
C306, C406	5171872000	Mylar	0.047μF	100V
C307, C407	5263168323	Meta.	0.22μF	50V
C308, C408	5263168913	Meta.	0.68μF	50V
C309, C409	5263168913	Meta.	0.68μF	50V
C310, C410	5263168323	Meta.	0.22μF	50V
C311, C411	5171872000	Mylar	0.047μF	100V
C312, C412	5260162550	Elec.	10μF	16V
C313, C413	5170368000	Mylar	0.0047μF	100V
C314, C414	5171856000	Mylar	0.01μF	100V
C315, C415	5260066550	Elec.	4.7μF	35V (BP)
C316, C416	5170352000	Mylar	0.001μF	100V
C317, C417	5263107620	Polypro.	820pF	100V
C318, C418	5170358000	Mylar	0.0018μF	100V
C319, C419	5260066550	Elec.	4.7μF	35V (BP)
C320, C420	5170368000	Mylar	0.0047μF	100V
C321, C421	5260162550	Elec.	10μF	16V
C322, C422	5171872000	Mylar	0.047μF	100V
C323, C423	5263168323	Meta.	0.22μF	50V
C324, C424	5263168913	Meta.	0.68μF	50V
C325, C425	5263168913	Meta.	0.68μF	50V
C326, C426	5263168323	Meta.	0.22μF	50V
C327, C427	5171872000	Mylar	0.047μF	100V
C328, C428	5260162550	Elec.	10μF	16V
C329, C429	5170368000	Mylar	0.0047μF	100V
C330, C430	5171856000	Mylar	0.01μF	100V
C331, C431	5260066550	Elec.	4.7μF	35V (BP)
C701	5173433000	Ceramic	0.01μF	50V
C702, C703	5260165252	Elec.	47μF	25V
C704	5173433000	Ceramic	0.01μF	50V
C705	5171866000	Mylar	0.027μF	100V
C706	5260160750	Elec.	1μF	50V
C707	5263168323	Meta.	0.22μF	50V
C708~C711	5260162550	Elec.	10μF	16V
C712, C713	5260160750	Elec.	1μF	50V
C714, C715	5171858000	Mylar	0.012μF	100V
C716	5170364000	Mylar	0.0033μF	100V
C717, C718	5260162550	Elec.	10μF	16V
C719, C720	5260165952	Elec.	100μF	10V
C721, C722	5260162550	Elec.	10μF	16V
C723	5171856000	Mylar	0.01μF	100V
C801	⚠5173082000	Elec.	1000μF	25V
C802	5260166052	Elec.	100μF	16V
C803	5260162550	Elec.	10μF	16V

REF. NO.	PARTS NO.	DESCRIPTION		
C804	5260166052	Elec.	100μF	16V
C805	⚠5173082000	Elec.	1000μF	25V
C806	5260160750	Elec.	1μF	50V
C807	5260166052	Elec.	100μF	16V
C808	⚠5173089000	Elec.	2200μF	25V
C809	5260165252	Elec.	47μF	25V
C810	⚠5262001110	Elec.	4700μF	25V
C811	5173082000	Elec.	1000μF	25V
C812	5260165252	Elec.	47μF	25V
C813	5260160750	Elec.	1μF	50V
C901, C902	5172216000	Ceramic	220pF	50V
C903	5173435000	Ceramic	0.047μF	50V
C904	5260161150	Elec.	2.2μF	50V
C905, C906	5173095000	Elec.	4700μF	6.3V
C909	5173433000	Ceramic	0.01μF	50V
C910	5260065850	Elec.	2.2μF	50V

VARIABLE RESISTORS

R11, R21	5280004002	Semi-fixed, 50kΩ	(B)
R12, R22	5280003502	Semi-fixed, 10kΩ	(B)
R13, R23	5280004002	Semi-fixed, 50kΩ	(B)
R14, R24	5280004002	Semi-fixed, 50kΩ	(B)
R15, R25	5280004002	Semi-fixed, 50kΩ	(B)
R16, R26	5280004002	Semi-fixed, 50kΩ	(B)
R17, R27	5280004002	Semi-fixed, 50kΩ	(B)
R18, R28	5280003502	Semi-fixed, 10kΩ	(B)
R19, R29	5280003502	Semi-fixed, 10kΩ	(B)
R20, R30	5280004002	Semi-fixed, 50kΩ	(B)
R71	5280002802	Semi-fixed, 1kΩ	(B)
R72	5280004002	Semi-fixed, 50kΩ	(B)
R73	5280003502	Semi-fixed, 10kΩ	(B)
R81	5280003502	Semi-fixed, 10kΩ	(B)

COILS

L101, L201	5286008700	Choke	8.2mH
L102, L202	5286001000	Choke	3.1mH
L301, L401	5286010200	Choke	36mH
L701, L702	5286006700	Choke	1.2mH

CONNECTOR PLUGS

P701	5336204300	3P (RED)
P702	5336202600	6P (WHT)
P703	5336204600	6P (RED)
P704	5336202400	4P (WHT)
P705	5336206600	6P (BLK)
P706	5336204400	4P (RED)
P707	5336204500	5P (RED)
P708	5336204900	9P (RED)
P901	5336204500	5P (RED)
P902	5336202300	3P (WHT)
P903	5336202900	9P (WHT)
P904, P905	5336202500	5P (WHT)
P906	5336202600	6P (WHT)

REF. NO.	PARTS NO.	DESCRIPTION
	MISCELLANEOUS	
U102, U202	5292805700	LPF 100kHz
U103, U203	5292202300	Bias module
U302, U402	5292805700	LPF 100kHz
U304, U404	5292805800	LPF MPX
U725	5292203600	OSC module
U930	5242112200	Resistor array 10kΩX13
U931	5242111300	Resistor array 10kΩX4
F801, F802	⚠5041140000	Fuse, T1A 250V [E, A]
F803	⚠5142191000	Fuse, T3.15A 250V [E, A]
	⚠5332015800	Holder, Fuse [E, A]
CR1	5347000900	Ceramic resonator KBR-800H
	5800243600	Heat sink
	5800460500	Heat sink (Blacket, PCB)
	5330508000	JACK, 4P
	5785123000	Washer, Lock
	5033295000	Tube, Insul.
	5033291000	Plate, Insul. 1S-313D

DBX PCB ASSY (R-999X)

REF. NO.	PARTS NO.	DESCRIPTION
	*5200089010	PCB Assy
	*5210089001	PCB
	IC's	
U501, U601	5220414501	μPC1252H-2
U502	5220418800	M5218P
U503, U603	5220414601	μPC1253H-2
U504, U604	5220414501	μPC1252H-2
U505	5220418800	M5218P
U506, U606	5220414601	μPC1253H-2
	TRANSISTORS	
Q501, Q601	5145092000	2SC1740LNS
Q502, Q602	5145092000	2SC1740LNS
Q503, Q603	5145092000	2SC1740LNS
Q504, Q604	5232007200	2SK364BL
Q505, Q605	5145092000	2SC1740LNS
	DIODES	
D501, D601	5224015020	1SS133T-77
	CARBON RESISTORS All resistors are rated ±5% tolerance, 1/8W and of carbon type unless otherwise noted.	
R501, R601	5240033220	120kΩ
R502, R602	5240025820	100Ω
R503, R603	5240031920	36kΩ
R504, R604	5240030020	5.6kΩ
R505, R605	5240031820	33kΩ

REF. NO.	PARTS NO.	DESCRIPTION	
R506, R606	5240030620	10kΩ	
R507, R607	5240029620	3.9kΩ	
R508, R608	5240024420	27Ω	
R509, R609	5240032420	56kΩ	
R510, R610	5240030620	10kΩ	
R511, R611	5240031820	33kΩ	
R512, R612	5240025820	100Ω	
R513, R613	5240033020	100kΩ	
R514, R614	5240032920	91kΩ	
R515, R615	5240029820	4.7kΩ	
R516, R616	5240031820	33kΩ	
R517, R617	5240031820	33kΩ	
R518, R618	5240030220	6.8kΩ	
R519, R619	5240029820	4.7kΩ	
R520, R620	5240029420	3.3kΩ	
R521, R621	5240031820	33kΩ	
R522, R622	5240034020	270kΩ	
R523, R623	5240031420	22kΩ	
R524, R624	5240023420	10Ω	
R525, R625	5240035120	750kΩ	
R526, R626	5240035420	1MΩ	
R527, R627	5240028220	1kΩ	
R528, R628	5240033220	120kΩ	
R529, R629	5240025820	100Ω	
R530, R630	5240031720	30kΩ	
R531, R631	5240030020	5.6kΩ	
R532, R632	5240031820	33kΩ	
R533, R633	5240030620	10kΩ	
R534, R634	5240029620	3.9kΩ	
R535, R635	5240024420	27Ω	
R536, R636	5240032420	56kΩ	
R537, R637	5240030620	10kΩ	
R538, R638	5240031820	33kΩ	
R539, R639	5240025820	100Ω	
R540, R640	5240033020	100kΩ	
R541, R641	5240032920	91kΩ	
R542, R642	5240029820	4.7kΩ	
R543, R643	5240031820	33kΩ	
R544, R644	5240031820	33kΩ	
R545, R645	5240030220	6.8kΩ	
R546, R646	5240029820	4.7kΩ	
R547, R647	5240029420	3.3kΩ	
R548, R648	5240031820	33kΩ	
R549, R649	5240034020	270kΩ	
R550, R650	5240031420	22kΩ	
R551, R651	5240023420	10Ω	
R552, R652	5240035120	750kΩ	
R553, R653	5240035420	1MΩ	
R554, R654	5240028220	1kΩ	
R555, R655	5240030620	10kΩ	
R556, R656	5240030620	10kΩ	
R562, R662	5240030820	12kΩ	
R563, R663	5240024220	22Ω	
R564, R664	5240024220	22Ω	
R565, R665	5240024220	22Ω	
R566, R666	5240032020	39kΩ	
R567, R667	5240177800	10MΩ	1/4W
R568, R668	5240177800	10MΩ	1/4W
R569, R669	5240030820	12kΩ	

Parts marked with * require longer delivery time.

[US] : U.S.A. [C] : CANADA [GE] : GENERAL EXPORT
[E] : EUROPE [A] : AUSTRALIA [J] : JAPAN

REF. NO.	PARTS NO.	DESCRIPTION
R570, R670	5240024200	22Ω
R571, R671	5240024200	22Ω
R572, R672	5240032020	39kΩ
R573, R673	5240024200	22Ω
R574, R674	5240177800	10MΩ 1/4W
R575, R675	5240177800	10MΩ 1/4W
	CAPACITORS	
C501, C601	5263167923	Meta. 0.1μF 50V
C502, C602	5263167923	Meta. 0.1μF 50V
C503, C603	5263169523	Meta. 0.3μF 50V
C504, C604	5171856000	Mylar 0.01μF 50V
C505, C605	5172212000	Ceramic 100pF 50V
C506, C606	5172212000	Ceramic 100pF 50V
C507, C607	5260066550	Elec. 4.7μF 35V (BP)
C508, C608	5263167923	Meta. 0.1μF 50V
C509, C609	5263167923	Meta. 0.1μF 50V
C510, C610	5170364000	Mylar 0.0033μF 100V
C511, C611	5170364000	Mylar 0.0033μF 100V
C512, C612	5172218000	Ceramic 330pF 50V
C513, C613	5263167923	Meta. 0.1μF 50V
C514, C614	5171856000	Mylar 0.01μF 100V
C515, C615	5260160750	Elec. 1μF 50V
C516, C616	5260227010	Elec. 10μF 35V
C517, C617	5260162550	Elec. 10μF 16V
C518, C618	5263167923	Meta. 0.1μF 50V
C519, C619	5263167923	Meta. 0.1μF 50V
C520, C620	5260160750	Elec. 1μF 50V
C521, C621	5263169523	Meta. 0.3μF 50V
C522, C622	5263106120	Polypro. 200pF 100V
C523, C623	5171856000	Myla. 0.01μF 100V
C524, C624	5172212000	Ceramic 100pF 50V
C525, C625	5260066550	Elec. 4.7μF 35V (BP)
C526, C626	5263167923	Meta. 0.1μF 50V
C527, C627	5263167923	Meta. 0.1μF 50V
C528, C628	5170364000	Mylar 0.0033μF 100V
C529, C629	5170364000	Mylar 0.0033μF 100V
C530, C630	5172218000	Ceramic 330pF 50V
C531, C631	5263167923	Meta. 0.1μF 50V
C532, C632	5171856000	Mylar 0.01μF 100V
C533, C633	5260160750	Elec. 1μF 50V
C534, C634	5260227010	Elec. 10μF 35V (LL)
C535, C635	5260162550	Elec. 10μF 16V
C536	5260165252	Elec. 47μF 25V
C537	5260165252	Elec. 47μF 25V
	VARIABLE RESISTORS	
R51, R61	5280004002	Semi-fixed 50kΩ (B)
R52, R62	5280004002	Semi-fixed 50kΩ (B)
R53, R63	5280004002	Semi-fixed 50kΩ (B)
R54, R64	5280004002	Semi-fixed 50kΩ (B)
R55, R65	5280003502	Semi-fixed 10kΩ (B)
R56, R66	5280003502	Semi-fixed 10kΩ (B)
	CONNECTOR PLUGS	
P501	5336202600	6P (WHT)
P502	5336202400	4P (WHT)
P503	5336204600	6P (RED)

Parts marked with * require longer delivery time.

SERVO PCB ASSY (R-999X)

REF. NO.	PARTS NO.	DESCRIPTION
	*5200152200	PCB Assy
	*5210152200	PCB
	IC's	
U1	5220414300	NJM4560D
U2	5220419500	LA6358
	DIGITAL TRANSISTORS	
U3, U4	5232252300	Transistor array LB1214
U5~U14	5232252020	2SC3400
	TRANSISTORS	
Q1	5145092000	2SC1740LNS
Q2~Q4	5145132000	2SA933LNS
Q5, Q6	⚠5230508700	2SB986S
Q7~Q9	5145092000	2SC1740LNS
Q10, Q11	5230508500	2SB892S
Q12, Q13	5230775000	2SC2878B
Q14	5145132000	2SA933LNS
Q15, Q16	5145092000	2SC1740LNS
Q17	5230508400	2SB698F
	DIODES	
D1~D13	5224015020	1SS133T-77
D14	5224540901	RD6.2EB2
D15~D20	5224015020	1SS133T-77
	CARBON RESISTORS All resistors are rated ±5% tolerance, 1/8W and of carbon resistors unless otherwise noted.	
R1~R3	5240031420	22kΩ
R4	5240029420	3.3kΩ
R5, R6	5240028420	1.2kΩ
R7	5240028720	1.6kΩ
R8	5240030620	10kΩ
R9	5240031620	27kΩ
R10	5240031420	22kΩ
R11	5240029420	3.3kΩ
R12	5240032220	47kΩ
R13	5240033020	100kΩ
R14	5240031820	33kΩ
R15	⚠5184724000	Metal 10Ω 2W Nonflammable
R16, R17	5240026820	270Ω
R18	⚠5184724000	Metal 10Ω 2W Nonflammable
R19~R23	5240031420	22kΩ
R24, R25	5240033620	180kΩ
R26	5240031420	22kΩ
R27, R28	5240030620	10kΩ
R29	5240032220	47kΩ
R30	5240033020	100kΩ
R31	5240031820	33kΩ
R32, R33	5240027620	560Ω
R34	5240028020	820Ω
R35	5240030620	10kΩ
R36	5240031420	22kΩ

REF. NO.	PARTS NO.	DESCRIPTION
R37, R38	5240029820	4.7kΩ
R39	5240027420	470Ω
R40	5240030620	10kΩ
R41	5240027420	470Ω
R42	5240030620	10kΩ
R43	5181432000	8.2Ω 1/4W
R44	5240031420	22kΩ
R45	5240030620	10kΩ
R46~R48	5240031420	22kΩ
R50	5240027420	470Ω
R51	5240026220	150Ω
R52	⚠5184710000	Metal 2.7Ω 2W Nonflammable
R53	5180032000	8.2Ω 1/2W
R54	5240030620	10kΩ
R55	5240027420	470Ω
R56	5240027020	330Ω
R57	5240028820	1.8kΩ
R58	5240028020	820Ω
R59	5240029820	4.7kΩ
R60	5240024020	18Ω
R61, R62	5240173400	150kΩ 1/4W
	CAPACITORS	
C1, C2	5260166052	Elec. 100μF 16V
C3	5173080000	Elec. 1000μF 10V
C4	5260165952	Elec. 100μF 10V
C5, C6	5260161150	Elec. 2.2μF 50V
C7	5260162050	Elec. 4.7μF 35V
C8, C9	5260067050	Elec. 10μF 16V (BP)
C10	5171864000	Mylar 0.022μF 100V
C12~C14	5173433000	Ceramic 0.01μF 50V
	MISCELLANEOUS	
R101, R102	5280171402	Var. res. Metal 100kΩ (B)
R103~R106	5280170602	Var. res. Metal 200Ω (B)
P1	5336202500	Connector plug 5P (WHT)
P2	5336202800	Connector plug 8P (WHT)
	5800243600	Heat sink

Parts marked with * require longer delivery time.

BL PCB ASSY (R-999X)

REF. NO.	PARTS NO.	DESCRIPTION
	*5200152100	PCB Assy
	*5210152100	PCB
Q101, Q201	5232007200	FET 2SK364BL
Q102, Q201	5230775000	Transistor 2SC2878B
D1	5224015020	Diode 1SS133T-77
D101, D201	5224015020	Diode 1SS133T-77
D102, D202	5225011400	LED SLP144B
D103, D203	5225011400	LED SLP144B
R1	5240028620	Carbon res. 1.5kΩ 1/8W 5%
R2	5240033020	Carbon res. 100kΩ 1/8W 5%
R101, R201	5240029220	Carbon res. 2.7kΩ 1/8W 5%
R102, R202	5240028220	Carbon res. 1kΩ 1/8W 5%
R103, R203	5240033020	Carbon res. 100kΩ 1/8W 5%
R10	5282409600	Var. res 20kΩ (A)X2
R11, R21	5053346000	Semi-fixed res. 4.7kΩ (B)
R12, R22	5053346000	Semi-fixed res. 4.7kΩ (B)
S1	5302102000	Switch, Tact KHH-15910
S2	5300910800	Switch, Slide SSY-322

TR PCB ASSY (1) (R-999X)

REF. NO.	PARTS NO.	DESCRIPTION
	*5200152300	PCB Assy
	*5210152300	PCB
Q1	5145129000	Transistor 2SB507E

TR PCB ASSY (2) (R-999X)

REF. NO.	PARTS NO.	DESCRIPTION
	*5200154800	PCB Assy
	*5210152300	PCB
Q1	5231761100	Transistor 2SD1348S
	5788101200	Tube, 2.1φ

MAIN PCB ASSY (R-777X)

REF. NO.	PARTS NO.	DESCRIPTION
	*5200150802	PCB Assy [US, C, J, GE]
	*5200150812	PCB Assy [E, A]
	*5210150802	PCB
	IC's	
U301, U401	5220423200	TEA0665
U501, U601	5220414501	μPC1252H-2
U502, U602	5220414601	μPC1253H-2
U701	5220412500	NJM4562DD
U702, U703	5220418800	M5218P
U704~U706	5220021600	M4066BP
U707	5220426200	M51143AL
U708, U709	5220418800	M5218P
U720	5220418800	M5218P
U801	5220425800	M5230L-A
U802	⚠5220423400	L7812
U803	⚠5220423500	L78L06
U901	5220805300	LM6402H-421
U902	5220805400	LM6402H-422
U903	5220019700	LC7800
U904	5220020500	LB1475
U906	5220015900	HD14011BP
U907	5220411500	BA6109
U908	5220015900	HD14011BP
U909	5220411500	BA6109
	DIGITAL TRANSISTORS	
U102, U202	5232251200	DTC-124N
U303, U403	5232251200	DTC-124N
U711	5232251200	DTC-124N
U712, U713	5232251100	DTA-124N
U714, U715	5232251200	DTC-124N
U716, U717	5232251100	DTA-124N
U718	5232251200	DTC-124N
U719	5232251100	DTA-124N
U721, U722	5232251200	DTC-124N
U723~U728	5232251100	DTA-124N
U729~U731	5232251200	DTC-124N
U804	5232251100	DTA-124N
U905	5232252300	Transistor array LB1214
U910~U915	5232251100	DTA-124N
U924, U925	5232251200	DTC-124N
	TRANSISTORS	
Q101, Q201	5230775000	2SC2878B
Q102, Q202	5230775000	2SC2878B
Q103, Q203	5145092000	2SC1740LNS
Q104, Q204	5145092000	2SC1740LNS
Q105, Q205	5145092000	2SC1740LNS
Q106, Q206	5230775000	2SC2878B
Q107, Q207	5145092000	2SC1740LNS
Q108, Q208	5145092000	2SC1740LNS
Q109, Q209	5145092000	2SC1740LNS
Q110, Q210	5145092000	2SC1740LNS

REF. NO.	PARTS NO.	DESCRIPTION
Q501, Q601	5145092000	2SC1740LNS
Q502, Q602	5230775000	2SC2878B
Q503, Q603	5230775000	2SC2878B
Q504, Q604	5230775000	2SC2878B
Q505, Q605	5230775000	2SC2878B
Q506, Q606	5230775000	2SC2878B
Q507, Q607	5230775000	2SC2878B
Q508, Q608	5145092000	2SC1740LNS
Q509, Q609	5230775000	2SC2878B
Q510, Q610	5230775000	2SC2878B
Q701, Q702	5145092000	2SC1740LNS
Q703	5231759400	2SD863E
Q704	5230506900	2SB764E
Q705	5145092000	2SC1740LNS
Q706	5145087000	2SD313E
Q707	5145129000	2SB507E
Q801	⚠5145129000	2SB507E
Q802	⚠5145087000	2SD313E
Q803	5231761300	2SD734F
Q804, Q805	5145092000	2SC1740LNS
Q901~Q905	5230508400	2SB698F
Q906	5145092000	2SC1740LNS
Q907	5145132000	2SA933LNS
Q908, Q909	5145092000	2SC1740LNS
Q910, Q911	5231761300	2SD734F
Q912, Q913	5230508400	2SB698F
	DIODES	
D101, D201	5224015020	1SS133T-77
D701~D725	5224015020	1SS133T-77
D726, D727	5224541801	Zener RD8.2EB2
D728~D730	5224015020	1SS133T-77
D801	⚠5228005000	W02
D802	⚠5228008700	2W02
D803~D808	⚠5224013200	DS135D
D809	⚠5224015020	1SS133T-77
D901~D905	5224015020	1SS133T-77
D906	5224013210	DS135D
D907	5224574501	Zener RD7.5EL3
D908	5224573801	Zener RD6.2EL2
D909	5224572901	Zener RD4.7EL2
	CARBON RESISTORS All resistors are rated ±5% tolerance, 1/8W and of carbon type unless otherwise noted.	
R101, R201	5240023420	10Ω
R102, R202	5240031720	30kΩ
R103, R203	5240025820	100Ω
R104, R204	5240030620	10kΩ
R105, R205	5240034020	270kΩ
R106, R206	5240029220	2.7kΩ
R107, R207	5240030020	5.6kΩ
R108, R208	5240029220	2.7kΩ
R109, R209	5240030020	5.6kΩ
R110, R210	5240030020	5.6kΩ

Parts marked with * require longer delivery time.

[US] : U.S.A. [C] : CANADA [GE] : GENERAL EXPORT
[E] : EUROPE [A] : AUSTRALIA [J] : JAPAN

REF. NO.	PARTS NO.	DESCRIPTION
R111, R211	5240028220	1kΩ
R112, R212	5240029020	2.2kΩ
R113, R213	5240033020	100kΩ
R114, R214	5240030420	8.2kΩ
R115, R215	5240031420	22kΩ
R116, R216	5240025820	100Ω
R117, R217	5240033020	100kΩ
R118, R218	5240028220	1kΩ
R119, R219	5240028220	1kΩ
R120, R220	5240028220	1kΩ
R121, R221	5240031420	22kΩ
R122, R222	5240031420	22kΩ
R123, R223	5240031420	22kΩ
R124, R224	5240030020	5.6kΩ
R125, R225	5240031420	22kΩ
R126, R226	5240030020	5.6kΩ
R127, R227	5240028420	1.2kΩ
R128, R228	5240030020	5.6kΩ
R129, R229	5240032620	68kΩ
R130, R230	5240031820	33kΩ
R131, R231	5240033020	100kΩ
R132, R232	5240029820	4.7kΩ
R133, R233	5240025820	100Ω
R134, R234	5240026620	220Ω
R135, R235	5240032220	47kΩ
R136, R236	5240031720	30kΩ
R137, R237	5240031020	15kΩ
R138, R238	5240030020	5.6kΩ
R139, R239	5240030620	10kΩ
R140, R240	5240030020	5.6kΩ
R141, R241	5240030020	5.6kΩ
R142, R242	5240030020	5.6kΩ
R143, R243	5240033020	100kΩ
R301, R401	5240029420	3.3kΩ
R302, R402	5240033020	100kΩ
R303, R403	5240030020	5.6kΩ
R304, R404	5240028220	1kΩ
R305, R405	5240029420	3.3kΩ
R306, R406	5240030020	5.6kΩ
R307, R407	5240028220	1kΩ
R308, R408	5240033020	100kΩ
R309, R409	5240031820	33kΩ
R310, R410	5240032820	82kΩ
R311, R411	5240032820	82kΩ
R312, R412	5240032620	68kΩ
R313, R413	5240029020	2.2kΩ
R314, R414	5240029920	5.1kΩ
R315, R415	5240033020	100kΩ
R501, R601	5240033220	120kΩ
R502, R602	5240025820	100Ω
R503, R603	5240031720	30kΩ
R504, R604	5240030020	5.6kΩ
R505, R605	5240031820	33kΩ
R506, R606	5240030620	10kΩ
R507, R607	5240032220	47kΩ
R508, R608	5240032220	47kΩ
R509, R609	5240032420	56kΩ
R510, R610	5240024220	22Ω

REF. NO.	PARTS NO.	DESCRIPTION	
R511, R611	5240024420	27Ω	
R512, R612	5240030820	12kΩ	
R513, R613	5240032220	47kΩ	
R514, R614	5240029620	3.9kΩ	
R515, R615	5240030620	10kΩ	
R516, R616	5240030620	10kΩ	
R517, R617	5240031820	33kΩ	
R518, R618	5240032220	47kΩ	
R519, R619	5240032220	47kΩ	
R520, R620	5240026220	150Ω	
R521, R621	5240033020	100kΩ	
R522, R622	5240032220	47kΩ	
R523, R623	5240031820	33kΩ	
R524, R624	5240032920	91kΩ	
R525, R625	5240029820	4.7kΩ	
R526, R626	5240031820	33kΩ	
R527, R627	5240030220	6.8kΩ	
R528, R628	5240029820	4.7kΩ	
R529, R629	5240029420	3.3kΩ	
R530, R630	5240031820	33kΩ	
R531, R631	5240031420	22kΩ	
R532, R632	5240032020	39kΩ	
R533, R633	5240024220	22Ω	
R534, R634	5240034020	270kΩ	
R535, R635	5240023420	10Ω	
R536, R636	5240035420	1MΩ	
R537, R637	5240035120	750kΩ	
R538, R638	5240024220	22Ω	
R539, R639	5240028220	1kΩ	
R540, R640	5240177800	10mΩ	1/4W
R541, R641	5240177800	10mΩ	1/4W
R542, R642	5240033020	100kΩ	
R543, R643	5240033020	100kΩ	
R544, R644	5240028420	1.2kΩ	
R545, R645	5240029120	2.4kΩ	
R546, R646	5240033020	100kΩ	
R547, R647	5240033020	100kΩ	
R701~R704	5240026620	220Ω	
R705	5240030620	10kΩ	
R706	5240029020	2.2kΩ	
R707	5240031420	22kΩ	
R708, R709	5240034620	470kΩ	
R710	5240034820	560kΩ	
R711	5240030620	10kΩ	
R712	5240028420	1.2kΩ	
R713~R715	5240030620	10kΩ	
R716	5240028220	1kΩ	
R717	5240028420	1.2kΩ	
R718	5240027420	470Ω	
R719	5240030620	10kΩ	
R720	5240033020	100kΩ	
R721	5240030020	5.6kΩ	
R722	5240030620	10kΩ	
R723	5240029020	2.2kΩ	
R724	5240030620	10kΩ	
R725, R726	5240029020	2.2kΩ	
R727, R728	5240030020	5.6kΩ	
R729, R720	5240030620	10kΩ	
R731	5240029020	2.2kΩ	
R732	5240029220	2.7kΩ	

REF. NO.	PARTS NO.	DESCRIPTION	
R733	5240030220	6.8kΩ	
R734~R737	5240030620	10kΩ	
R738, R739	5240027420	470Ω	
R740	5240028220	1kΩ	
R741	5240031420	22kΩ	
R742	5240030620	10kΩ	
R743	5240029820	4.7kΩ	
R744	5240028220	1kΩ	
R745~R747	5240030620	10kΩ	
R748	5240031820	33kΩ	
R801	5240026620	220Ω	
R802	5240027620	560Ω	
R803	5240031020	15kΩ	
R804	5240029420	3.3kΩ	
R805	5240071020	15kΩ	2%
R806	5240026620	220Ω	
R807	5240027620	560Ω	
R808	5240071020	15kΩ	2%
R810	⚠5183554000	10Ω	1/4W Nonflammable
R811, R812	5240028420	1.2kΩ	
R813	5240025020	47Ω	
R814, R815	5240030620	10kΩ	
R816	5240032220	47kΩ	
R817	5240030620	10kΩ	
R901~R916	5240025020	47Ω	
R917~R921	5240029020	2.2kΩ	
R922	5240030620	10kΩ	
R923	5240031420	22kΩ	
R924~R929	5240030620	10kΩ	
R930	5240035420	1MΩ	
R931, R932	5240029020	2.2kΩ	
R933	5240031020	15kΩ	
R934	5240025820	100Ω	
R935	5240033020	100kΩ	
R936	5240032220	47kΩ	
R937	5240034620	470kΩ	
R938, R939	5240030620	10kΩ	
R940	5240069820	4.7kΩ	2%
R941	⚠5241220510	10Ω	2W Nonflammable
R942~R947	5240028220	1kΩ	
R948	⚠5181974000	10Ω	1/2W Nonflammable

CAPACITORS

REF. NO.	PARTS NO.	DESCRIPTION		
C101, C201	5172220000	Ceramic	470pF	50V
C102, C202	5260166852	Elec.	220μF	10V
C103, C203	5171858000	Mylar	0.012μF	100V
C104, C204	5260066550	Elec.	4.7μF	35V (BP)
C105, C205	5171862000	Mylar	0.018μF	100V
C106, C206	5170368000	Mylar	0.0047μF	100V
C107, C207	5260066550	Elec.	4.7μF	35V (BP)
C108, C208	5172212000	Ceramic	100pF	50V
C109, C209	5260066550	Elec.	4.7μF	35V (BP)
C110, C210	5260162550	Elec.	10μF	16V
C111, C211	5170364000	Mylar	0.0033μF	100V
C112, C212	5171876000	Mylar	0.068μF	100V
C113, C213	5260066550	Elec.	4.7μF	35V (BP)
C114, C214	5170370000	Mylar	0.0056μF	100V
C115, C215	5170360000	Mylar	0.0022μF	100V
C116, C216	5260066550	Elec.	4.7μF	35V (BP)
C117, C217	5170352000	Mylar	0.001μF	100V
C118, C218	5263106220	Polypro.	220pF	100V
C119, C219	5263105420	Polypro.	100pF	100V
C120, C220	5170358000	Mylar	0.0018μF	100V
C301, C401	5260066550	Elec.	4.7μF	35V (BP)
C302, C402	5170362000	Mylar	0.0027μF	100V
C303, C403	5170358000	Mylar	0.0018μF	100V
C304, C404	5260066550	Elec.	4.7μF	35V (BP)
C305, C405	5170368000	Mylar	0.0047μF	100V
C306, C406	5260162550	Elec.	10μF	16V
C307, C407	5171872000	Mylar	0.047μF	100V
C308, C408	5263168323	Meta.	0.22μF	50V
C309, C409	5263168913	Meta.	0.68μF	50V
C310, C410	5263168913	Meta.	0.68μF	50V
C311, C411	5263168323	Meta.	0.22μF	50V
C312, C412	5171872000	Mylar	0.047μF	100V
C313, C413	5260162550	Elec.	10μF	16V
C314, C414	5170368000	Mylar	0.0047μF	100V
C315, C415	5171856000	Mylar	0.01μF	100V
C316, C416	5260066550	Elec.	4.7μF	35V (BP)
C317, C417	5260066550	Elec.	4.7μF	35V (BP)
C501, C601	5263167923	Meta.	0.1μF	50V
C502, C602	5263167923	Meta.	0.1μF	50V
C503, C603	5260160750	Elec.	1μF	50V
C504, C604	5263169523	Meta.	0.3μF	50V
C505, C605	5263106120	Polypro.	200pF	100V
C506, C606	5171856000	Mylar	0.01μF	100V
C507, C607	5172212000	Ceramic	100pF	50V
C508, C608	5172212000	Ceramic	100pF	50V
C509, C609	5260066550	Elec.	4.7μF	35V (BP)
C510, C610	5263167923	Meta.	0.1μF	50V
C511, C611	5263167923	Meta.	0.1μF	50V
C512, C612	5170364000	Mylar	0.0033μF	100V
C513, C613	5170364000	Mylar	0.0033μF	100V
C514, C614	5172218000	Ceramic	330pF	50V
C515, C615	5263167923	Meta.	0.1μF	50V
C516, C616	5171856000	Mylar	0.01μF	100V
C517, C617	5260160750	Elec.	1μF	50V
C518, C618	5260227010	Elec.	10μF	35V
C519, C619	5260162550	Elec.	10μF	16V
C520, C620	5171856000	Mylar	0.01μF	100V
C701	5260162550	Elec.	10μF	16V
C702, C703	5173433000	Ceramic	0.01μF	50V
C704~C706	5260162550	Elec.	10μF	16V
C707	5171866000	Mylar	0.027μF	100V
C708	5260160750	Elec.	1μF	50V
C709	52631868323	Meta.	0.22μF	50V
C710	5260162550	Elec.	10μF	16V
C711, C712	5260160750	Elec.	1μF	50V
C713	5260162550	Elec.	10μF	16V
C714	5260165952	Elec.	100μF	10V
C715, C716	5260162550	Elec.	10μF	16V
C717, C718	5260165952	Elec.	100μF	10V
C719, C720	5260162550	Elec.	10μF	16V
C721	5260160750	Elec.	1μF	50V
C722	5170372000	Mylar	0.0068μF	100V
C723	5260160750	Elec.	1μF	50V
C724, C725	5260166052	Elec.	100μF	16V

REF. NO.	PARTS NO.	DESCRIPTION		
C801	⚠5173089000	Elec.	2200μF	25V
C804	5173054800	Elec.	220μF	16V
C805	⚠5173082000	Elec.	1000μF	25V
C806	5260161150	Elec.	2.2μF	50V
C807	5173054800	Elec.	220μF	16V
C808	⚠5173089000	Elec.	2200μF	25V
C809	5260165252	Elec.	47μF	25V
C810	⚠5262001110	Elec.	4700μF	25V
C811	⚠5173082000	Elec.	1000μF	25V
C812	5260165252	Elec.	47μF	25V
C813	5260160750	Elec.	1μF	50V
C901, C902	5172216000	Ceramic	220pF	50V
C903	5173435000	Ceramic	0.047μF	50V
C904	5260161150	Elec.	2.2μF	50V
C905, C906	5173095000	Elec.	4700μF	6.3V
C907	5260065850	Elec.	2.2μF	50V (BP)
C908, C909	5173433000	Ceramic	0.01μF	50V
C910	5260065850	Elec.	2.2μF	50V (BP)
	VARIABLE RESISTORS			
R11, R21	5280004002	Semi-fixed	50kΩ (B)	
R12, R22	5280003502	Semi-fixed	10kΩ (B)	
R13, R23	5280004002	Semi-fixed	50kΩ (B)	
R14, R24	5280004002	Semi-fixed	50kΩ (B)	
R15, R25	5280003502	Semi-fixed	10kΩ (B)	
R16, R26	5280004202	Semi-fixed	100kΩ (B)	
R51, R61	5280004002	Semi-fixed	50kΩ (B)	
R52, R62	5280003502	Semi-fixed	10kΩ (B)	
R53, R63	5280004002	Semi-fixed	50kΩ (B)	
R81	5280003502	Semi-fixed	10kΩ (B)	
	COILS			
L101, L201	5286008700	Choke	8.2mH	
L301, L401	5286010200	Choke	36mH	
L701, L702	5286006700	Choke	1.2mH	
	CONNECTOR PLUGS			
P701	5336204600	6P (RED)		
P702	5336202600	6P (WHT)		
P703	5336204600	6P (RED)		
P704	5336202400	4P (WHT)		
P705	5336206600	6P (WHT)		
P706	5336202300	3P (WHT)		
P707	5336204200	2P (RED)		
P901	5336204500	5P (RED)		
P902	5336202300	3P (WHT)		
P903	5336202900	9P (WHT)		
P904, P905	5336202500	5P (WHT)		
P906	5336202600	6P (WHT)		
	MISCELLANEOUS			
U101, U201	5292805500	LPF 100kHz		
U302, U402	5292805600	LPF MPX		
U710	5292203700	OSC module		
U930	5242112200	Resistor array 10kΩX13		

REF. NO.	PARTS NO.	DESCRIPTION		
U931, U932	5242111300	Resistor array 10kΩX4		
CR1	5347000900	Ceramic resonator KBR-800H		
F801, F802	⚠5142185000	Fuse, T630mA	250V	[E, A]
F803	⚠5142188000	Fuse, T1.6A	250V	[E, A]
	⚠5332015800	Holder, Fuse		[E, A]
	5033295000	Tube, Insul. IS-313D		
	5033291000	Plate, Insul.		
	5330508000	Jack, 4P		
	5785123000	Washer, Lock		
	5317003100	Heat sink		
	5800460500	Heat sink (Blacket, PCB)		

LED MODULE PCB ASSY (R-999X/R-777X) (PC Board Omitted)

REF. NO.	PARTS NO.	DESCRIPTION	
	*5200165110	PCB Assy	(R-999X)
	*5200165100	PCB Assy	(R-777X)
	*5292203800	LED MODULE (with PCB)	
	DIODES		
D1, D2	5042517000	1S2473VE	
D3	5042517000	1S2473VE	(R-999X)
	CARBON RESISTORS All resistors are rated ±5% tolerance and 1/4W.		
R1	5240171000	15kΩ	
R2	5240169000	2.2kΩ	
R3, R4	5240171700	30kΩ	
R5~R7	5240167200	390Ω	
R8~R11	5240168200	1kΩ	
R12	5240168200	1kΩ	(R-999X)
R13	5240169000	2.2kΩ	(R-999X)
	CAPACITORS		
C1~C5	5260162550	Elec. 10μF	16V
	CONNECTOR PLUGS		
P1	5336202800	8P (WHT)	
P2	5336202500	5P (WHT)	
P3	5336202300	3P (WHT)	
P4	5336202600	6P (WHT)	
P5	5336202400	4P (WHT)	
P6	5336202200	2P (WHT)	(R-999X)
	MISCELLANEOUS		
U1, U2	5242109400	Resistor array 2.2kΩX7	
S1	5302102000	SW. Tact KHH-15910 (R-999X)	

Parts marked with * require longer delivery time.

[US] : U.S.A. [C] : CANADA [GE] : GENERAL EXPORT
[E] : EUROPE [A] : AUSTRALIA [J] : JAPAN

SW PCB ASSY (R-999X/R-777X)

REF. NO.	PARTS NO.	DESCRIPTION		
	*5200151700	PCB Assy		
	*5210151700	PCB		
	DIODES			
D1, D2	5225011800	LED, SLH-34MC3 (GRN)		
D3~D5	5225011700	LED, SLH-34VRC3 (RED)		
	CARBON RESISTORS			
R1	5240068620	1.5kΩ	1/8W	2%
R2	5240067320	430Ω	1/8W	2%
R3	5240067520	510Ω	1/8W	2%
R4	5240067720	620Ω	1/8W	2%
R5	5240067920	750Ω	1/8W	2%
R6	5240068920	2.0kΩ	1/8W	2%
R7	5240068520	1.3kΩ	1/8W	2%
R8	5240068920	2.0kΩ	1/8W	2%
R9	5240069120	2.4Ω	1/8W	2%
R10	5240069520	3.6kΩ	1/8W	2%
R11, R12	5240026820	270Ω	1/8W	5%
R13~R15	5240027220	390Ω	1/8W	5%
	SWITCHES			
S1~S2	5302102000	Tact, KHH-15910		
S13	5300910900	Slide, SSY-323		

VR PCB ASSY (V-999X/V-777X)

REF. NO.	PARTS NO.	DESCRIPTION	
	*5200151610	PCB Assy	(R-999X)
	*5200151600	PCB Assy	(R-777X)
	*5210151600	PCB	
	DIODE		
D1	5224015020	1SS133T-77	
	VARIABLE RESISTORS		
R10	5284007900	Slide, 50kΩ (A)×2	
R11	5284008100	Slide, 1kΩ (B)	(R-777X)
R12	5284008000	Slide, 20kΩ (A)×2	(R-777X)
	SWITCHES		
S101~S104	5302102000	Tact, KHH-15910	
S105	5300031400	Push, 2-2	
S106	5300037600	Push, 6-gang	

MECHANISM PCB ASSY (V-999X/V-777X)

REF. NO.	PARTS NO.	DESCRIPTION		
	*5200151500	PCB Assy		
	*5210151500	PCB		
	IC's			
U1	5220423300	LA6324		
U2	5220017200	HD14069UBP		
	DIGITAL TRANSISTORS			
U3, U4	5232251200	DTC-124N		
	TRANSISTOR			
Q1	5145092000	2SC1740LNS		
	DIODES			
D1, D2	5224015000	1SS133		
D3, D4	5225005400	LED, SLP-135B (RED)		
	CARBON RESISTORS All resistors are rated ±5% tolerance and 1/8W.			
R1, R2	5240027020	330Ω		
R3, R4	5240028220	1kΩ		
R5	5240030620	10kΩ		
R6	5240031820	33kΩ		
R7	5240031020	15kΩ		
R8	5240029020	2.2kΩ		
R9	5240035420	1MΩ		
R10, R11	5240033420	150kΩ		
R12	5240031420	22kΩ		
R13	5240031820	33kΩ		
R14	5240031620	27kΩ		
R15	5240032220	47kΩ		
R16	5240033020	100kΩ		
R17	5240029420	3.3kΩ		
R18	5240031820	33kΩ		
R19	5240031620	27kΩ		
R20	5240032220	47kΩ		
R21	5240033020	100kΩ		
R22, R23	5240029420	3.3kΩ		
R24	5240030020	5.6kΩ		
	CAPACITORS			
C1	5260162550	Elec.	10μF	16V
C2	5260162050	Elec.	4.7μF	35V
	VARIABLE RESISTORS			
R101, R201	5280021700	Semi-fixed 47kΩ (B)		
	MISCELLANEOUS			
P1	5336203200	Connector plug, 12P (WHT)		
P2	5336202900	Connector plug, 9P (WHT)		
TP	5544750000	Pin, Combination		

Parts marked with * require longer delivery time.

SENSE PCB ASSY (R-999X/R-777X)

REF. NO.	PARTS NO.	DESCRIPTION
	*5200164800	PCB Assy
	*5210164800	PCB
	IC	
U1	5220426300	BA6993
	CARBON RESISTORS All resistors are rated ±5% tolerance and 1/8W.	
R1	5240028220	1kΩ
R2	5240030620	10kΩ
R3	5240032220	47kΩ
R4	5240033020	100kΩ
R5	5240033420	150kΩ
R6	5240027020	300Ω
R7	5240031020	15kΩ
R8	5240032220	47kΩ
	CAPACITORS	
C1, C2	5260164252	Elec. 33μF 16V
	CONNECTOR PLUG	
P1	5336202400	4P (WHT)

TIMER PCB ASSY (R-999X/R-777X)

REF. NO.	PARTS NO.	DESCRIPTION
	*5200151801	PCB Assy
	*5210151800	PCB
S1	5300910900	SW, Slide SSY-323
J1	5330011600	Jack, PHONES

JOINT PCB ASSY (R-999X/R-777X)

REF. NO.	PARTS NO.	DESCRIPTION
	*5200151200	PCB Assy
	*5210151200	PCB
L1, L2	5286023500	Choke coil, Variable

SENSOR PCB ASSY (R-999X/R-777X)

REF. NO.	PARTS NO.	DESCRIPTION
	*5200151100	PCB Assy
	*5210151100	PCB
Q101, Q102	5228008300	Phote transistor PH-102K
R101	5181474000	Carbon res. 470Ω 1/4W 5%

POWER SW PCB ASSY (R-999X/R-777X) (PC Board Omitted)

REF. NO.	PARTS NO.	DESCRIPTION	
	*5200151900	PCB Assy	[J]
	*5200151910	PCB Assy	[US]
	*5200151920	PCB Assy	[C]
	*5200151930	PCB Assy	[GE]
	*5200151940	PCB Assy	[E, A]
	*5210151900	PCB	
	SPARK KILLER		
Z1	⚠5052905000	0.1μF+120Ω/300V	[J]
Z1	⚠5052910000	0.033μF+120Ω/125V UL	[US]
Z1	⚠5292002600	0.033μF+120Ω/125V	[C]
Z1	⚠5292002500	0.01μF+300Ω/300V	[GE]
C1	⚠5267702500	0.0047μF/250V	[E, A]
	MISCELLANEOUS		
S1	⚠5300031900	SW, Push SPLC1P	
	5327007200	Terminal, Lapping; 2P	[E, A]

Parts marked with * require longer delivery time.

[US] : U.S.A. [C] : CANADA [GE] : GENERAL EXPORT
[E] : EUROPE [A] : AUSTRALIA [J] : JAPAN

8 IC BLOCK DIAGRAMS

ICブロック・ダイヤグラム

LM6402H-421
LM6402H-422

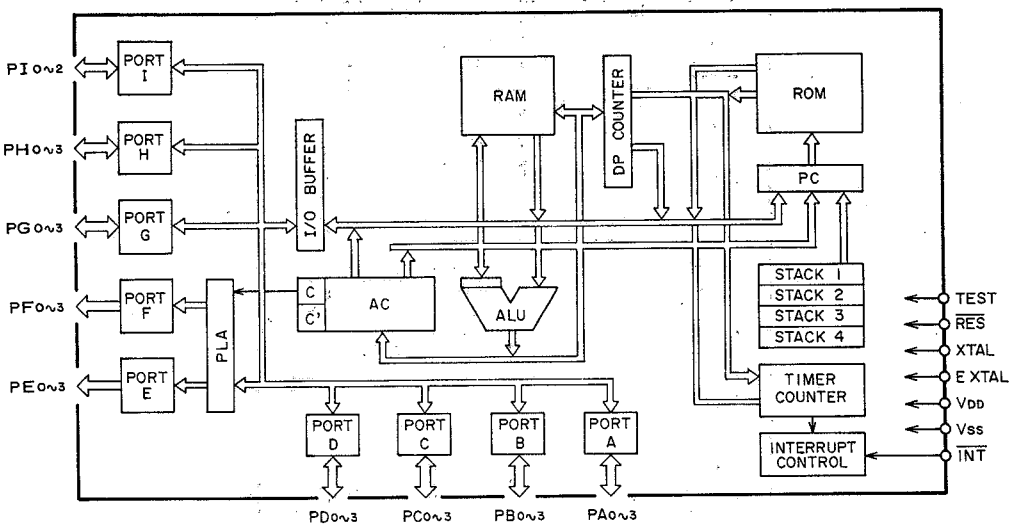

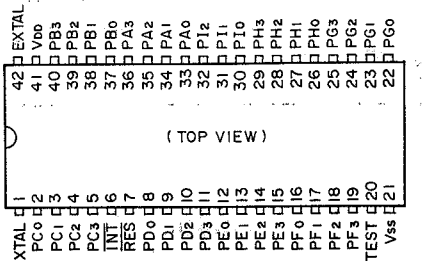

M51143AL

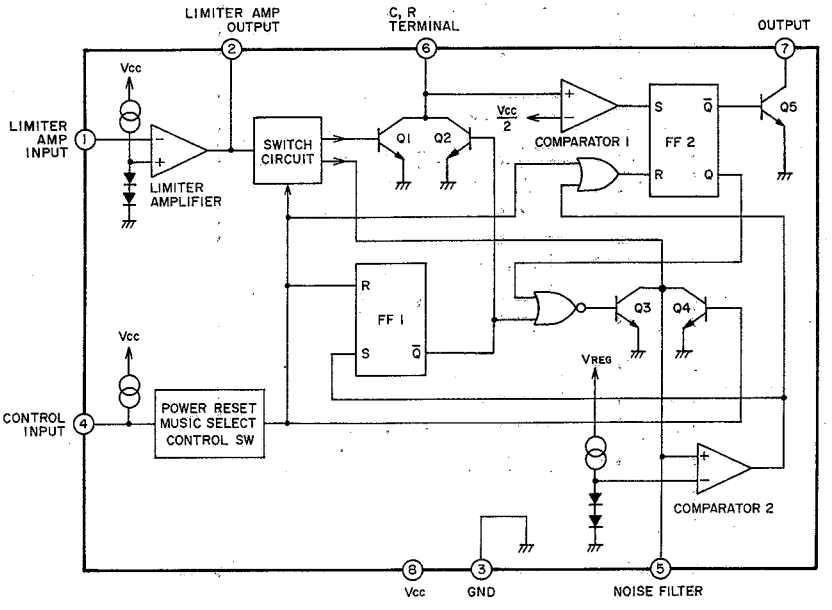

LB1475

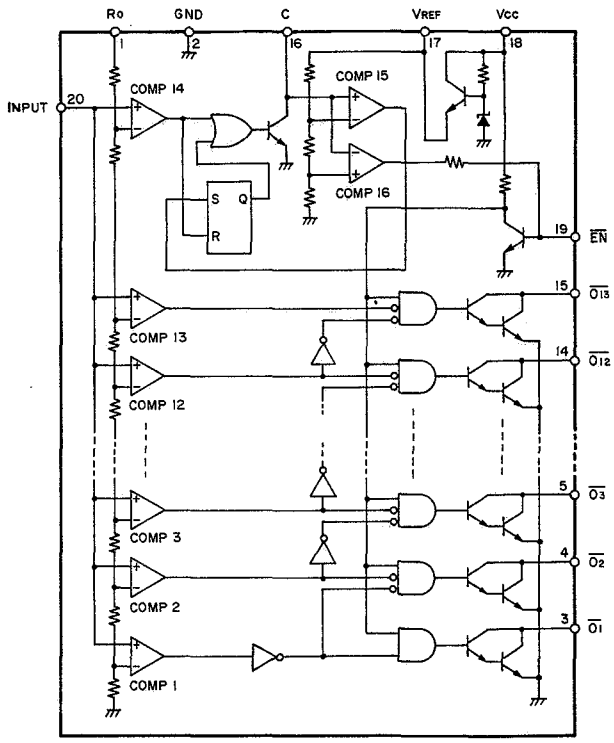

LC7800

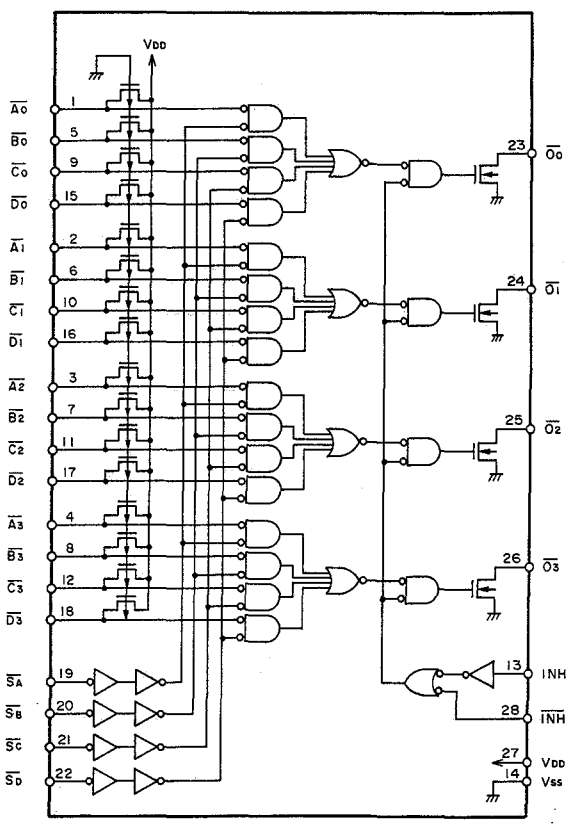

TEA0665

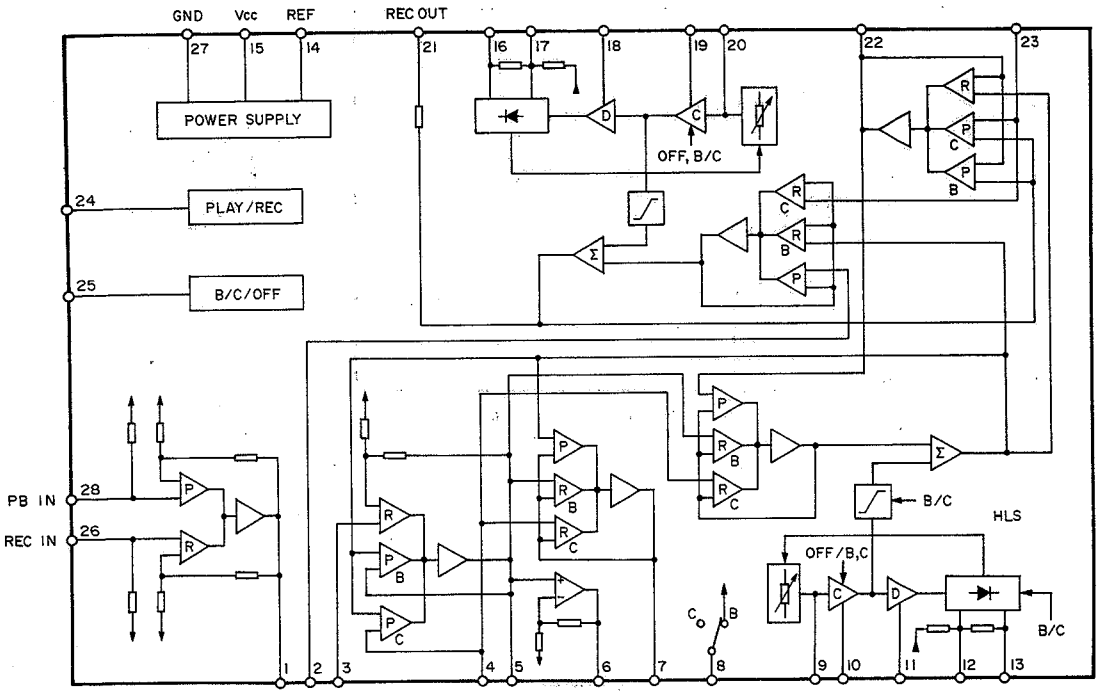

μPC1252H2

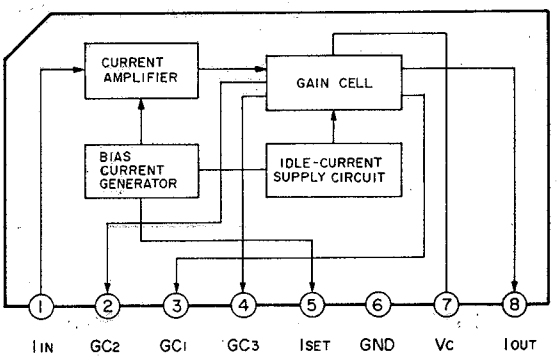

μPC1253H2

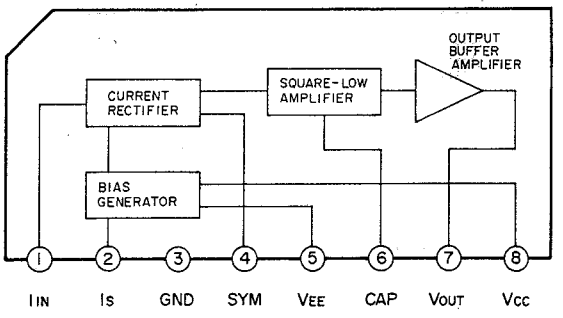

M5230L-A

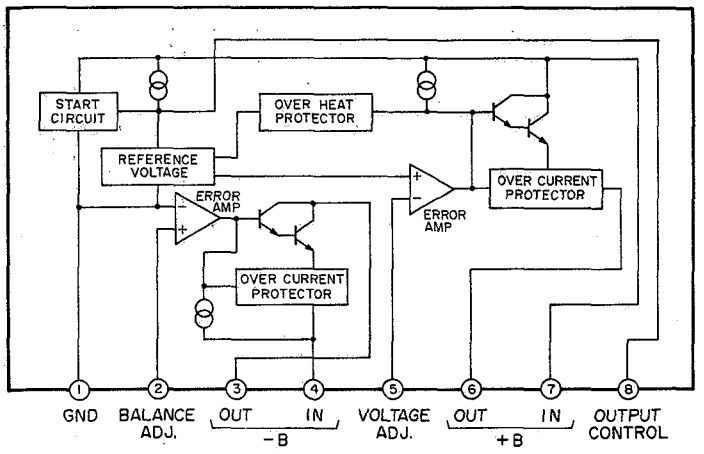

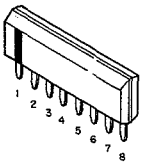

L78N06
L7812

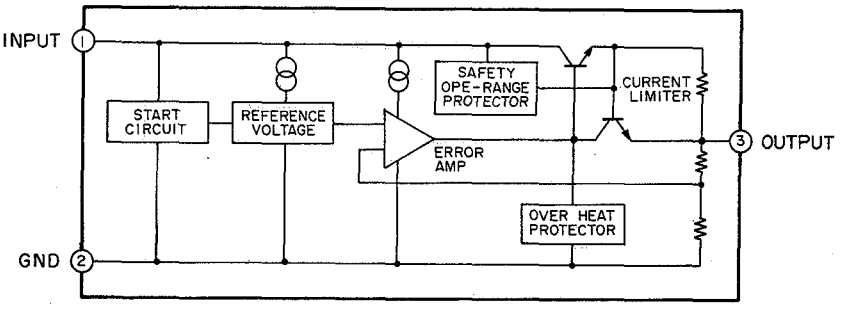

L7812

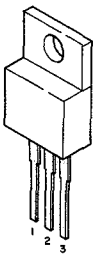

L78N06

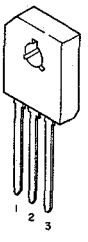

HD1411BP

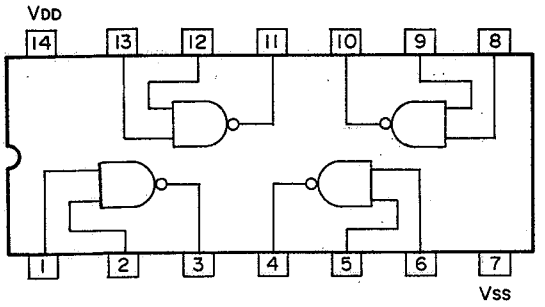

LB1214

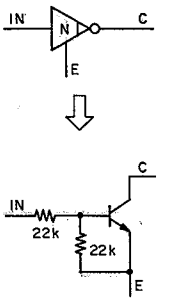

HD14069UBP

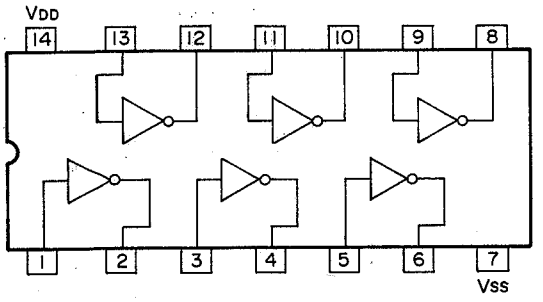

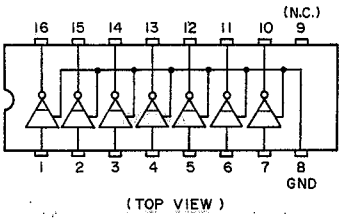

2SC3400

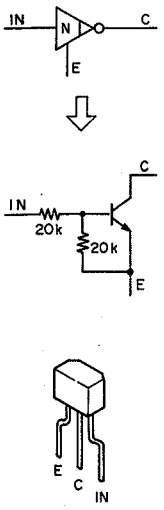

DTC124N

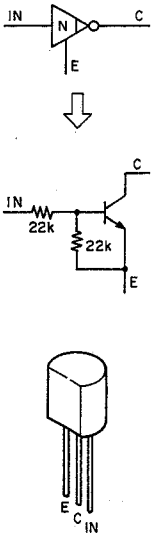

DTA124N

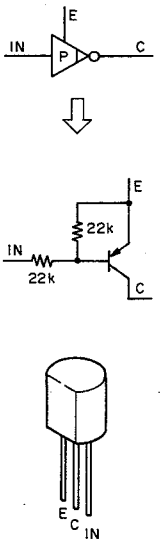

M40668P

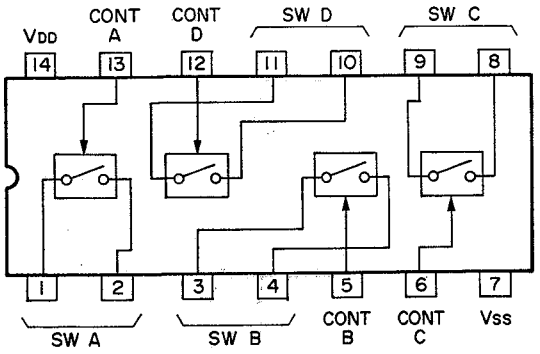

LA6324

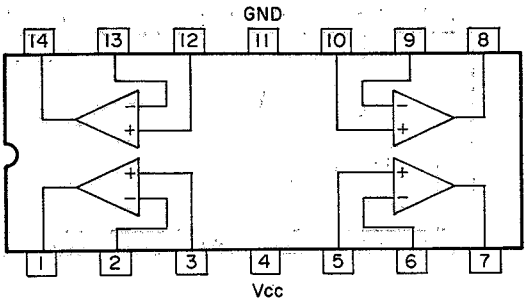

LA6358

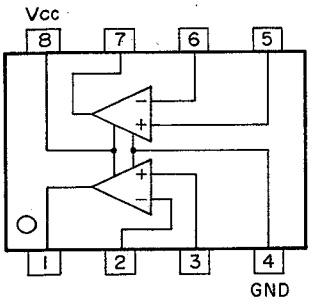

NJM4560D
NJM4562DD
NJM4556D
M5218P

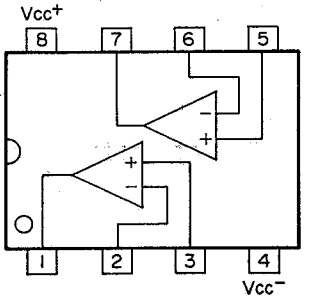

BA6109

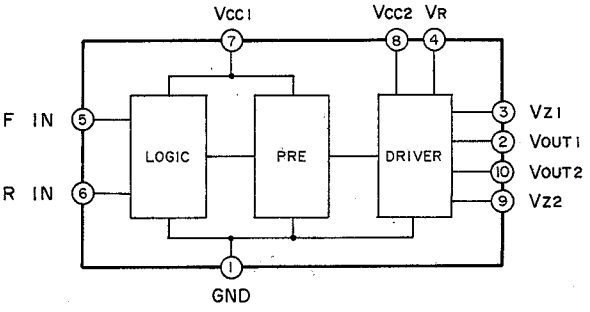

F IN	R IN	VOUT1	VOUT2
H	H	L	L
L	H	L	H
H	L	H	L
L	L	OPEN	OPEN

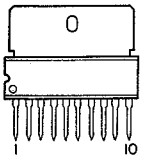

TEAC SCHEMATIC DIAGRAM R-999X

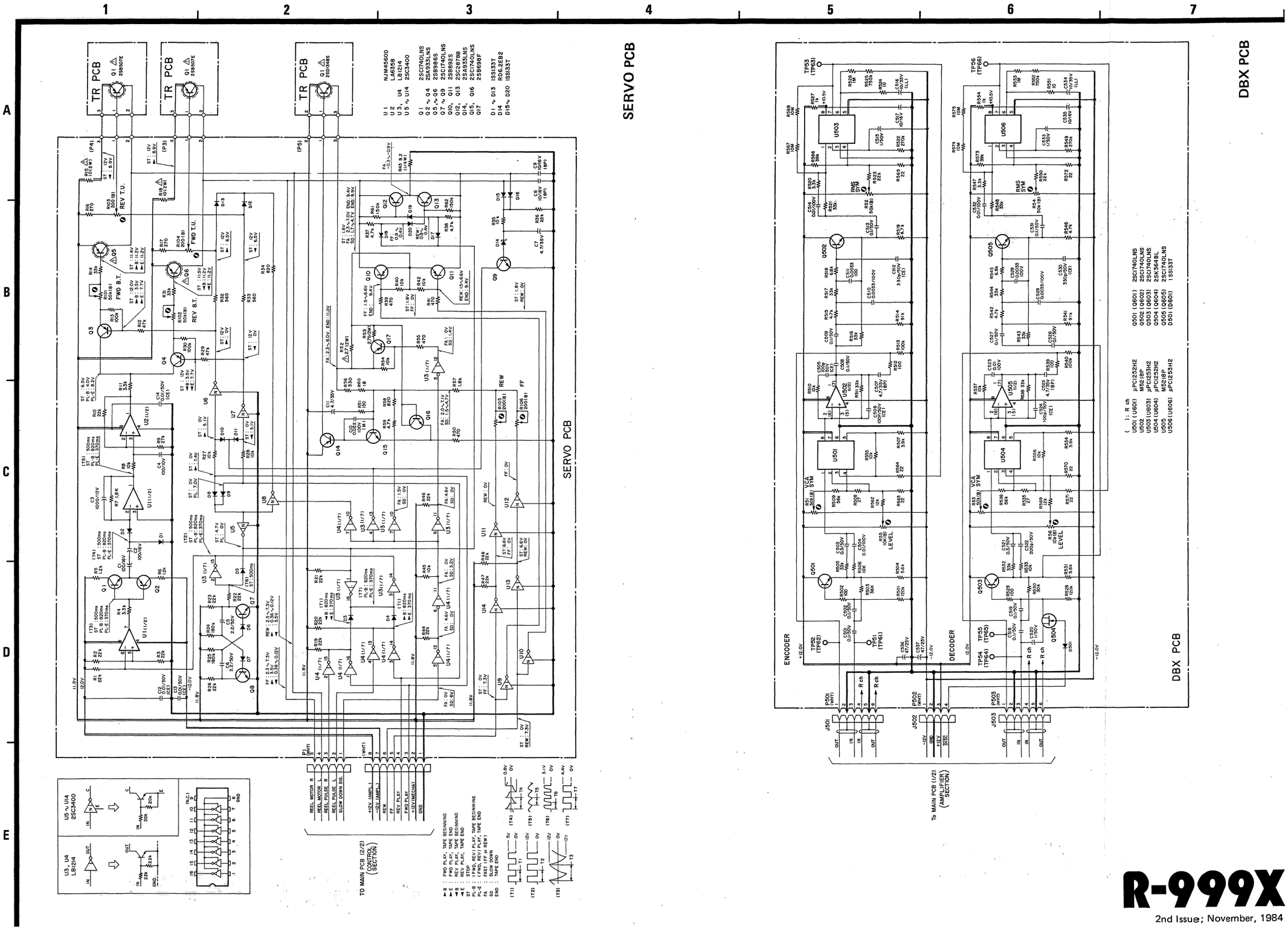

R-999X

2nd Issue; November, 1984

Schematic Diagrams

R-999X/R-777X

Auto-Reverse Stereo Cassette Deck

INSTRUCTIONS FOR SERVICE PERSONNEL

BEFORE RETURNING APPLIANCE TO THE CUSTOMER, MAKE LEAKAGE-CURRENT OR RESISTANCE MEASUREMENTS TO DETERMINE THAT EXPLOSED PARTS ARE ACCEPTABLY INSULATED FROM THE SUPPLY CIRCUIT.

NOTES

1. Resistor values are in ohms (k=kilo-ohms, M=megohms).
2. Capacitor values are in microfarads (p=picofarads).
3. Voltage and signal level values are for reference only.
   0dB=0.775V
4. ▭ : Front panel indication
5. ⬚ : Rear panel indication
6. ——— : +B power supply circuit
7. ——— : −B power supply circuit
8. ⚠ Parts marked with this sign are safety critical components. They must always be replaced with identical components-refer to the appropriate parts list and ensure exact replacement.

注意

1. 抵抗の単位はΩ(k＝kΩ、M＝MΩ)です。
2. コンデンサの単位はμF(p＝pF)です。
3. 電圧及び信号レベルは参考値です。
   0dB＝0.775V
4. ▭：フロント・パネル上の表示
5. ⬚：リア・パネル上の表示
6. ———：＋B電源回路
7. ———：−B電源回路
8. ⚠マークのある部品は安全重要部品です。
   交換するときは必ずティアック指定の部品を使用してください。

TEAC®

2nd Issue; November, 1984

TEAC® SCHEMATIC DIAGRAM **R-999X/R-777X**

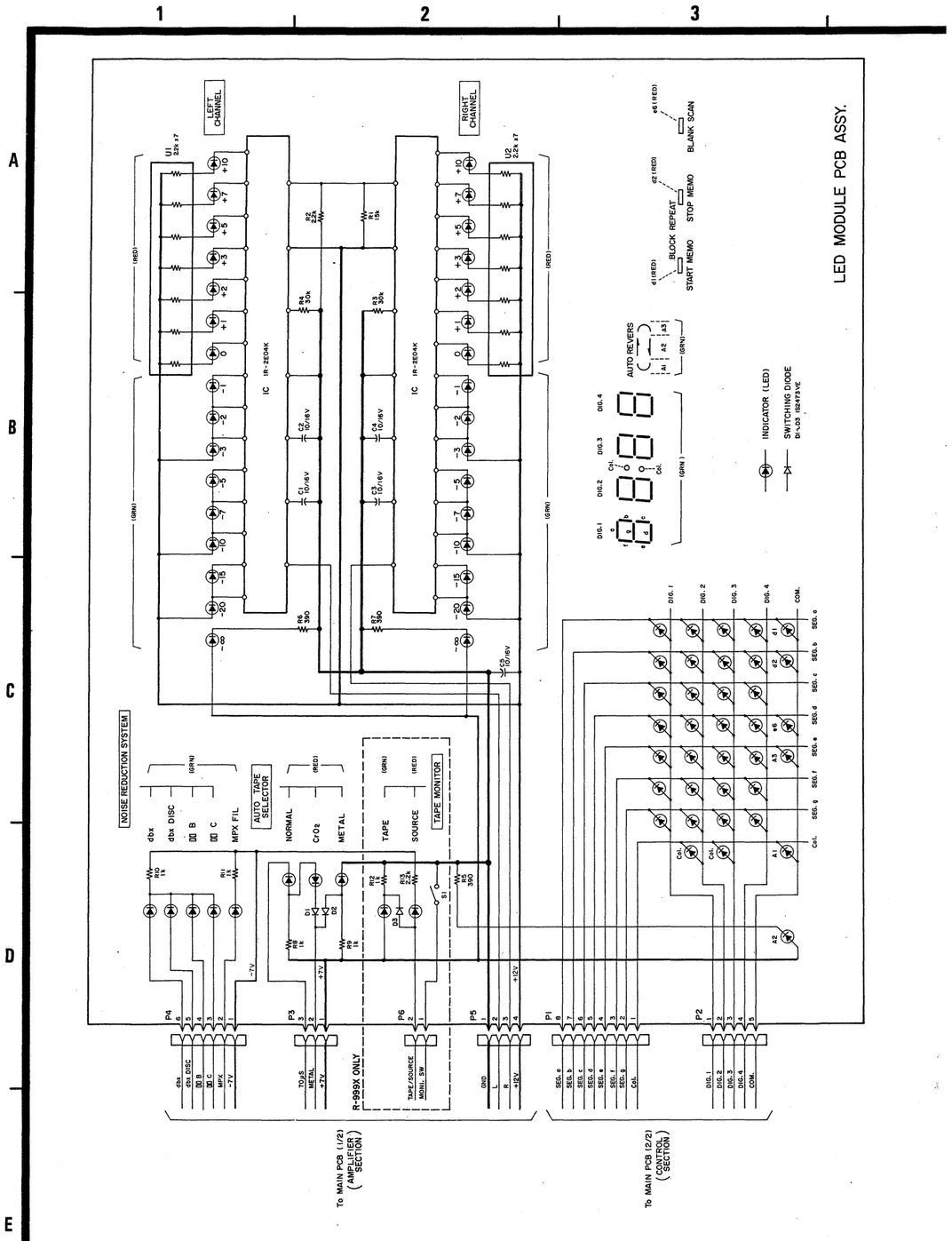

R-999X/R-777X LED PCB

2nd Issue; November, 1984

TEAC SCHEMATIC DIAGRAM R-999X

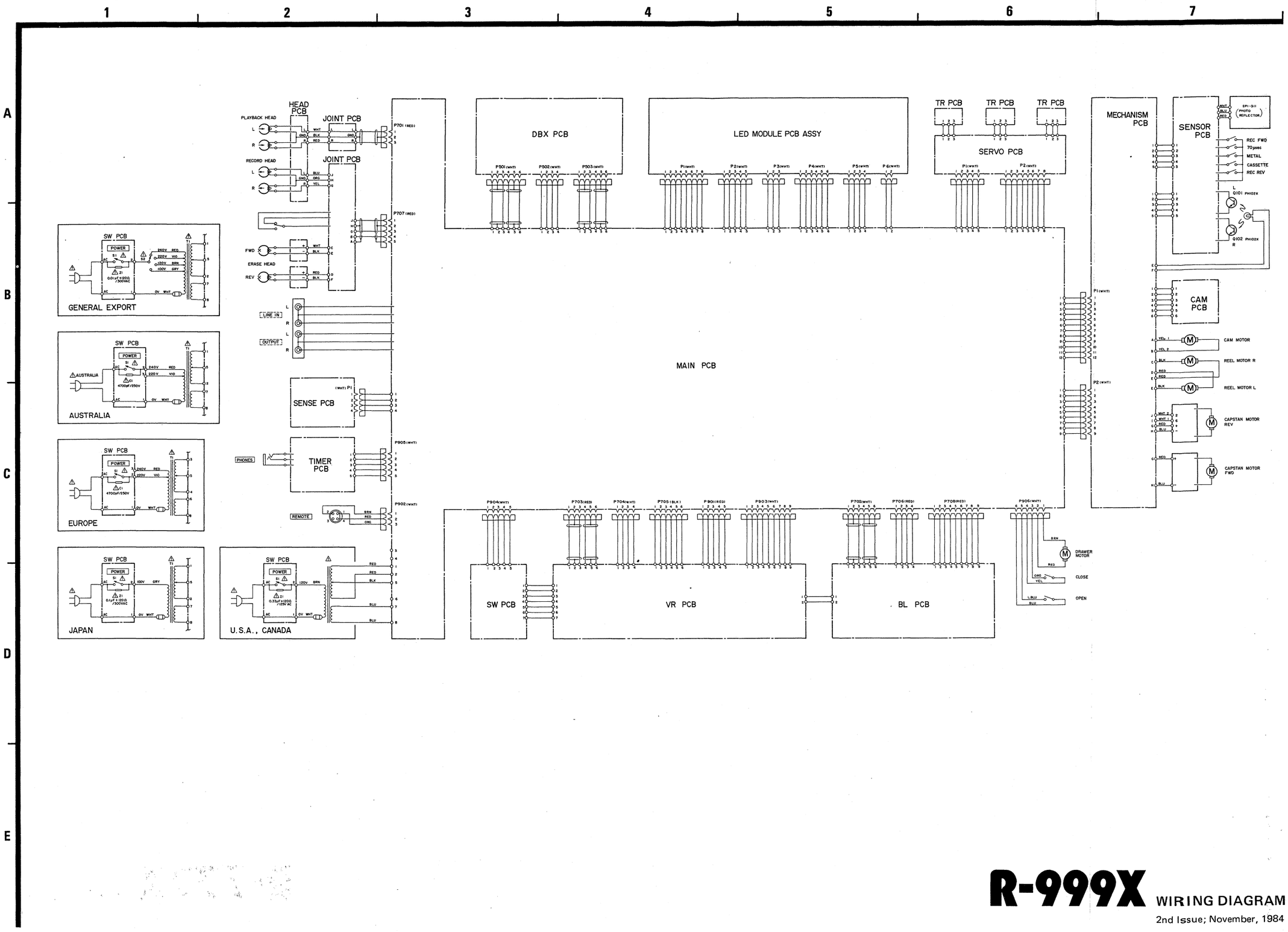

R-999X WIRING DIAGRAM

2nd Issue; November, 1984

TEAC SCHEMATIC DIAGRAM R-777X

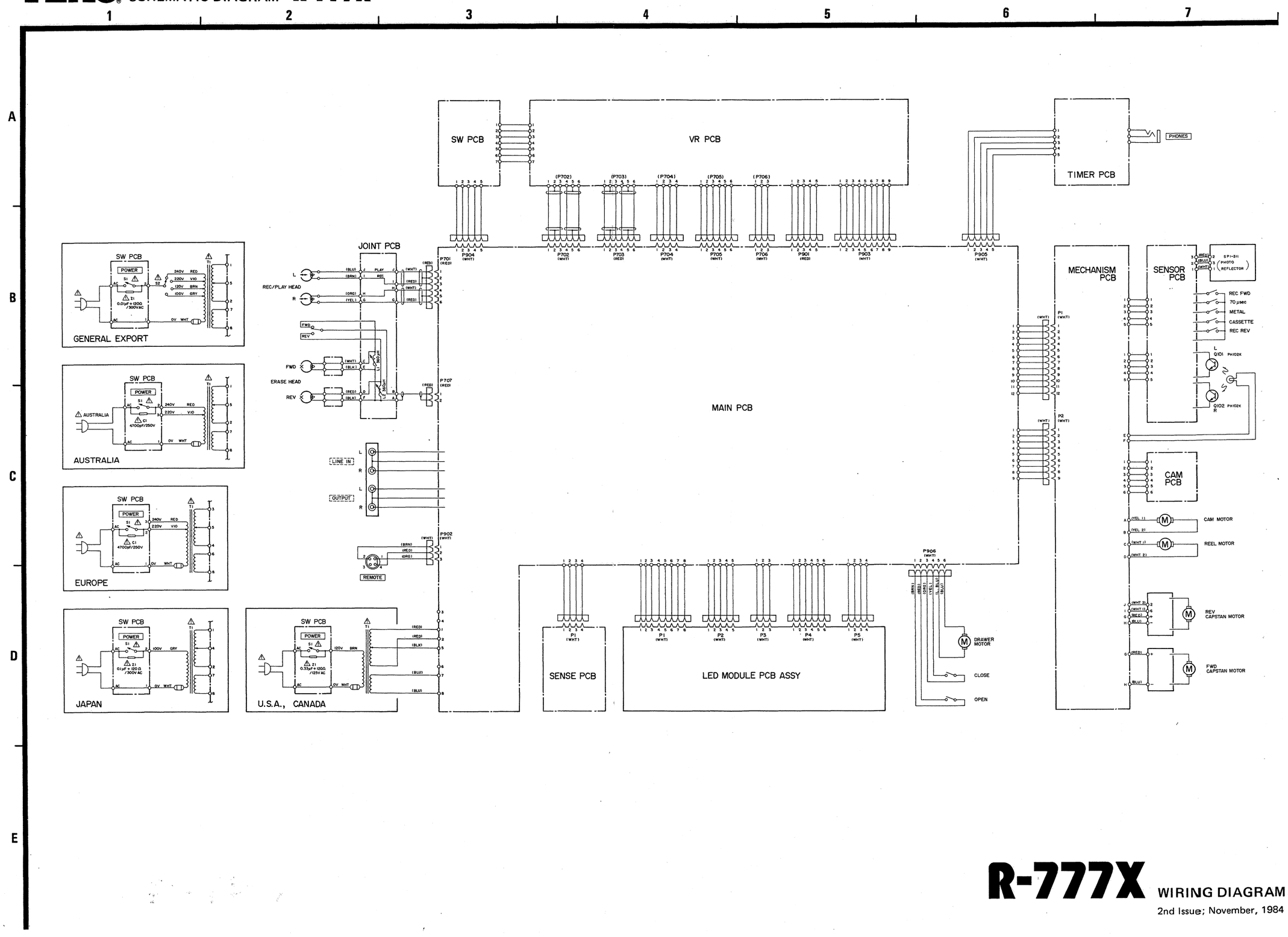

R-777X WIRING DIAGRAM

2nd Issue; November, 1984

TEAC SCHEMATIC DIAGRAM R-777X

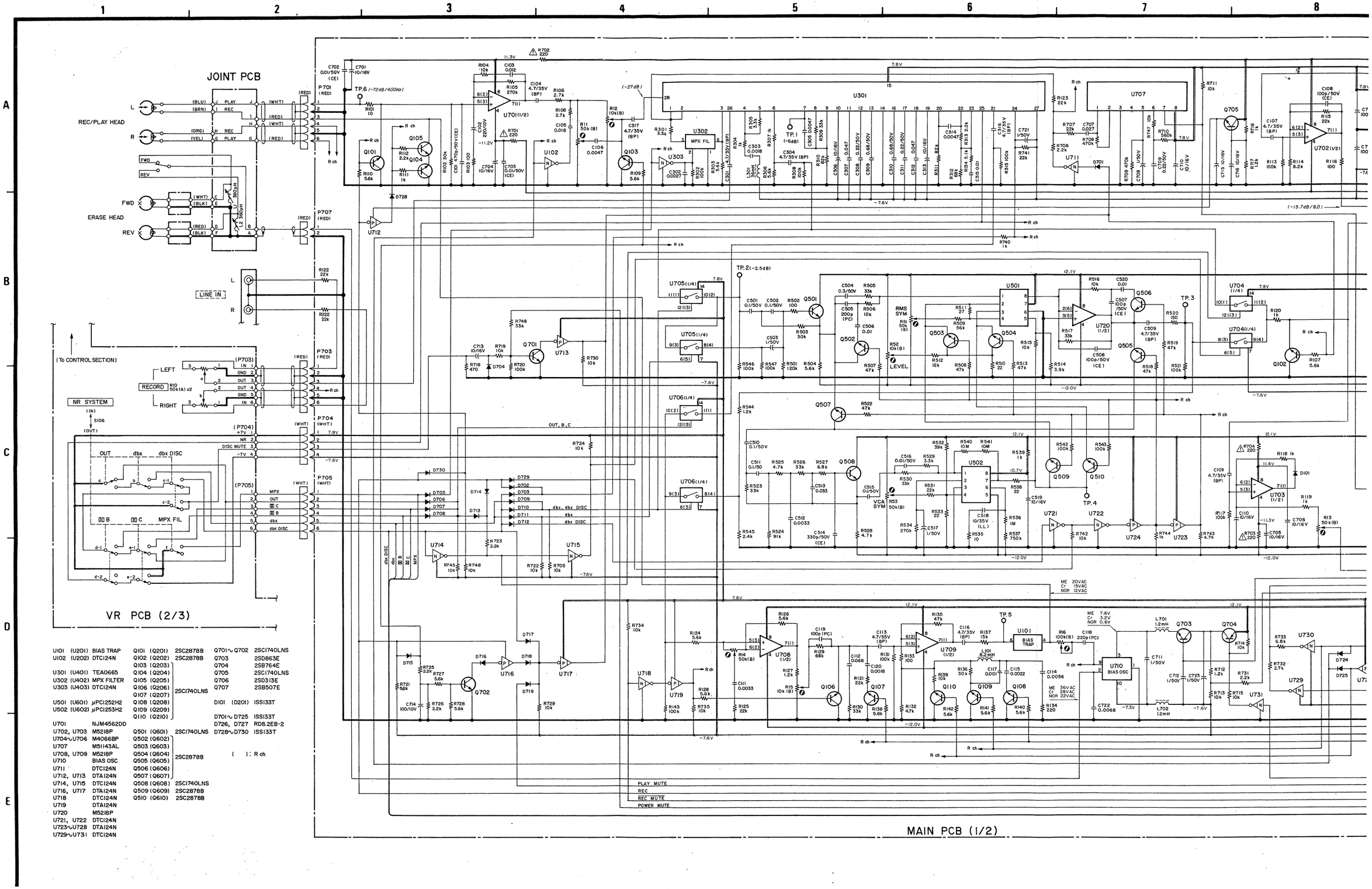

U101 (U201)	BIAS TRAP	Q101 (Q201)	2SC2878B	Q701∿Q702	2SC1740LNS
U102 (U202)	DTC124N	Q102 (Q202)	2SC2878B	Q703	2SD863E
		Q103 (Q203)	2SC1740LNS	Q704	2SB764E
U301 (U401)	TEA0665	Q104 (Q204)		Q705	2SC1740LNS
U302 (U402)	MPX FILTER	Q105 (Q205)		Q706	2SD313E
U303 (U403)	DTC124N	Q106 (Q206)		Q707	2SB507E
		Q107 (Q207)			
U501 (U601)	μPC1252H2	Q108 (Q208)		D101 (D201)	1SS133T
U502 (U602)	μPC1253H2	Q109 (Q209)			
		Q110 (Q210)		D701∿D725	1SS133T
U701	NJM4562DD			D726, D727	RD8.2EB-2
U702, U703	M5218P	Q501 (Q601)	2SC1740LNS	D728∿D730	1SS133T
U704∿U706	M4066BP	Q502 (Q602)			
U707	M51143AL	Q503 (Q603)			
U708, U709	M5218P	Q504 (Q604)	2SC2878B		
U710	BIAS OSC	Q505 (Q605)			
U711	DTC124N	Q506 (Q606)			
U712, U713	DTA124N	Q507 (Q607)			
U714, U715	DTC124N	Q508 (Q608)	2SC1740LNS		
U716, U717	DTA124N	Q509 (Q609)	2SC2878B		
U718	DTC124N	Q510 (Q610)	2SC2878B		
U719	DTA124N				
U720	M5218P				
U721, U722	DTC124N				
U723∿U728	DTA124N				
U729∿U731	DTC124N				

( ) : R ch

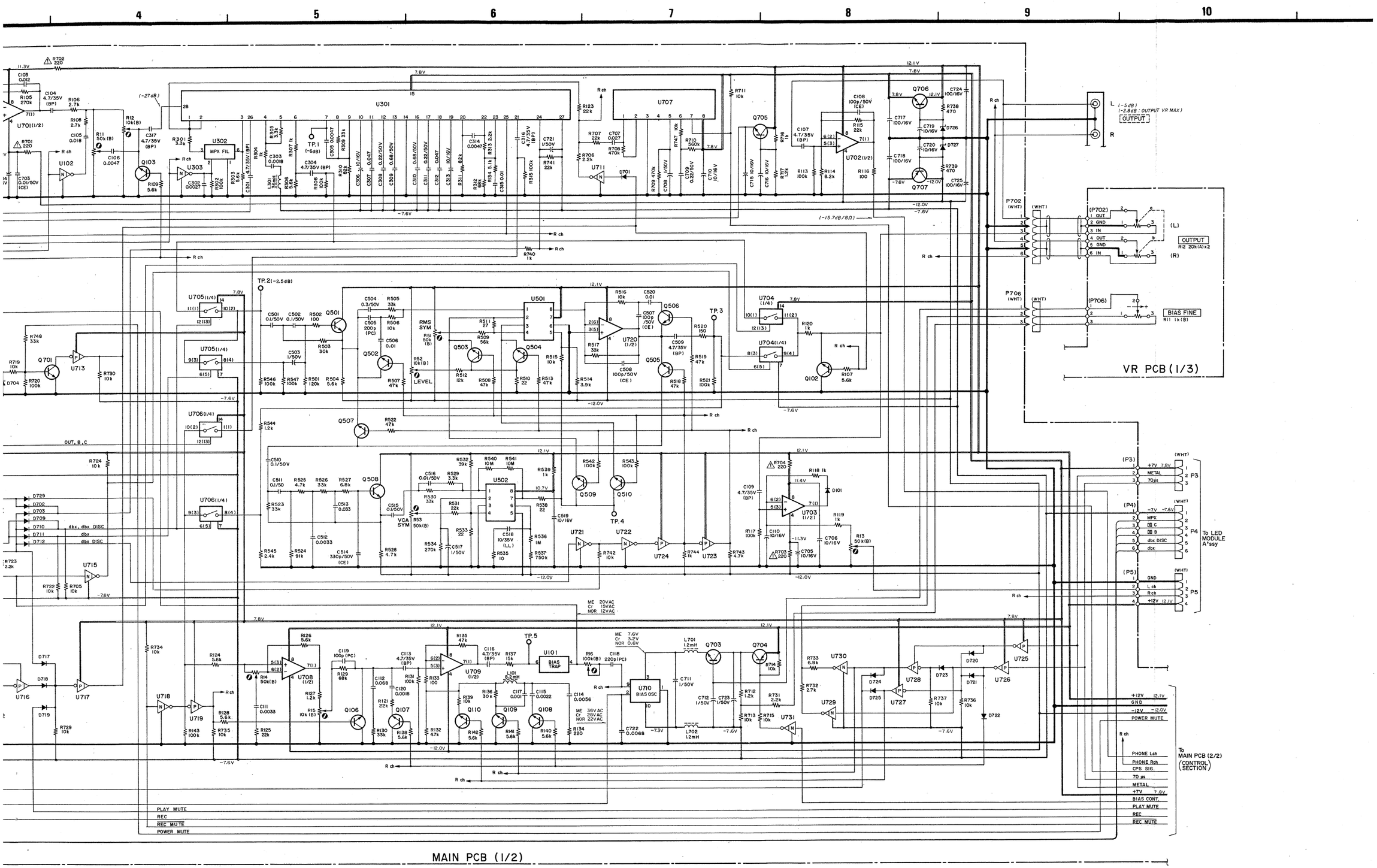

R-777X Amplifier Section

2nd Issue; November, 1984

TEAC SCHEMATIC DIAGRAM R-777X

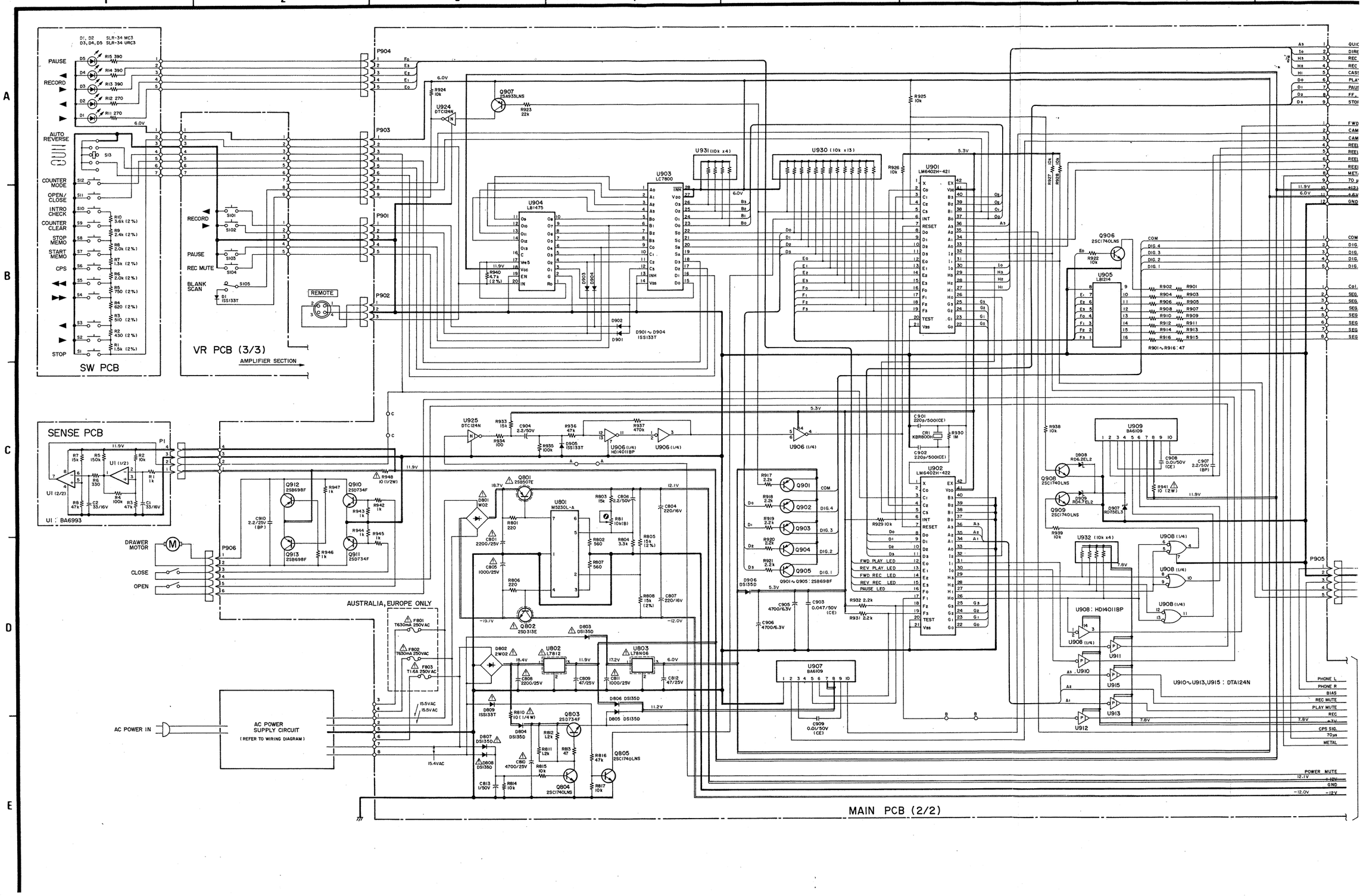

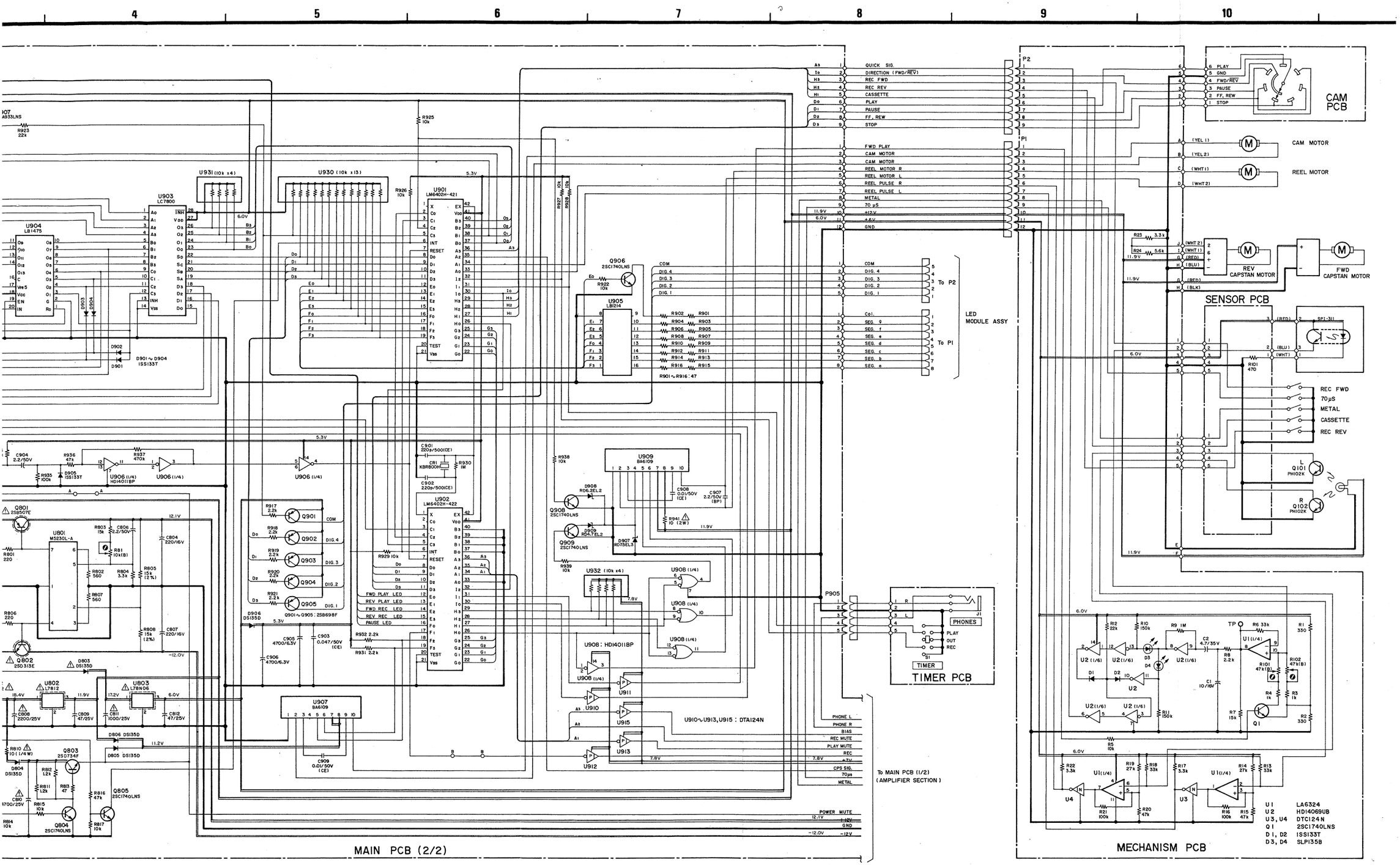

R-777X Control Section

2nd Issue; November, 1984

TEAC SCHEMATIC DIAGRAM R-999X

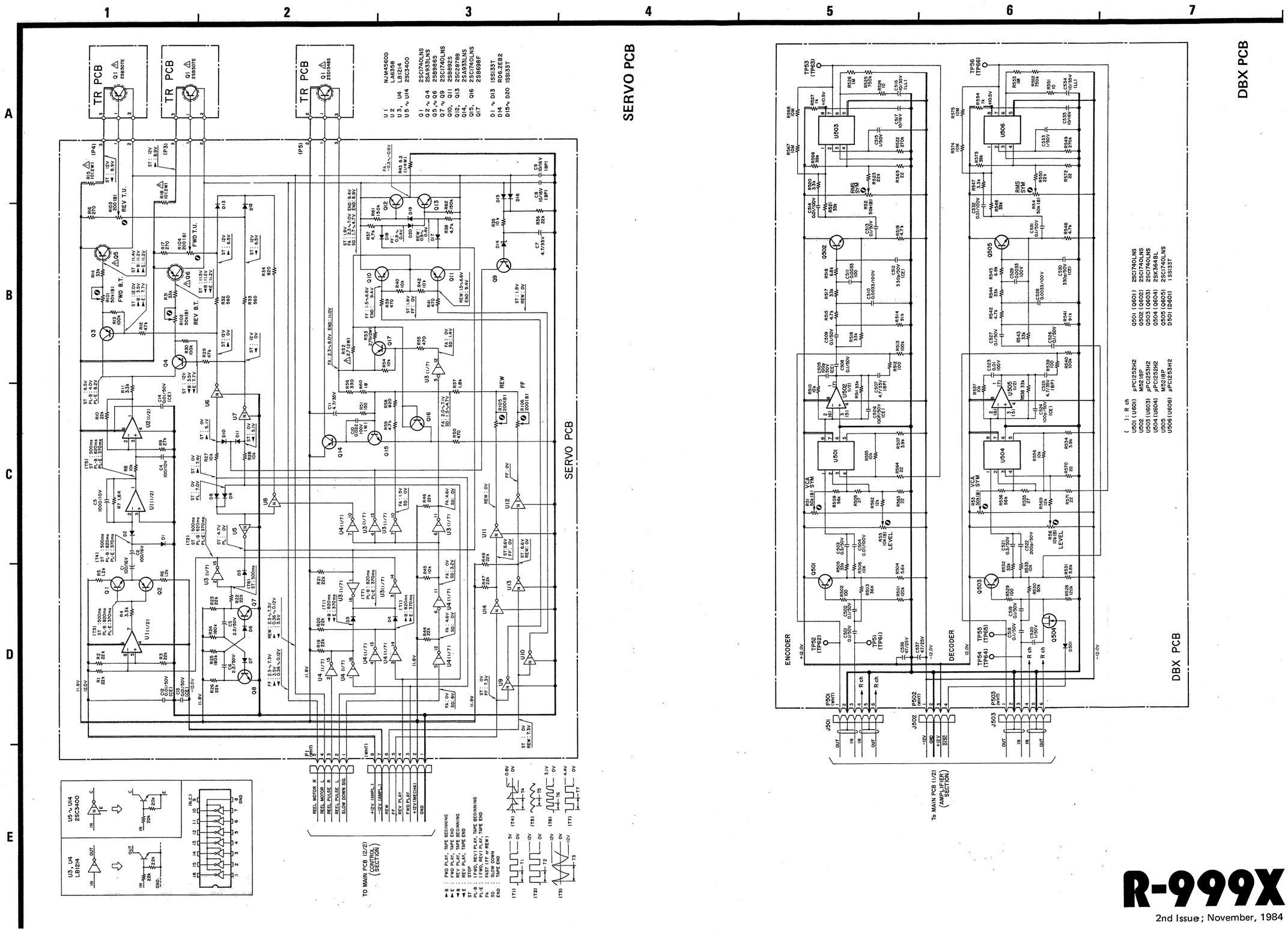

R-999X

2nd Issue ; November, 1984

Schematic Diagrams

R-999X/R-777X

Auto-Reverse Stereo Cassette Deck

INSTRUCTIONS FOR SERVICE PERSONNEL

BEFORE RETURNING APPLIANCE TO THE CUSTOMER, MAKE LEAKAGE-CURRENT OR RESISTANCE MEASUREMENTS TO DETERMINE THAT EXPLOSED PARTS ARE ACCEPTABLY INSULATED FROM THE SUPPLY CIRCUIT.

NOTES

1. Resistor values are in ohms (k=kilo-ohms, M=megohms).
2. Capacitor values are in microfarads (p=picofarads).
3. Voltage and signal level values are for reference only.
   0dB=0.775V
4. ▭ : Front panel indication
5. ⬚ : Rear panel indication
6. ——— : +B power supply circuit
7. ——— : −B power supply circuit
8. ⚠ Parts marked with this sign are safety critical components. They must always be replaced with identical components-refer to the appropriate parts list and ensure exact replacement.

注意

1. 抵抗の単位はΩ(k＝kΩ，M＝MΩ)です．
2. コンデンサの単位はμF(p＝pF)です．
3. 電圧及び信号レベルは参考値です．
   0dB＝0.775V
4. ▭ ：フロント・パネル上の表示
5. ⬚ ：リア・パネル上の表示
6. ——— ：＋B電源回路
7. ——— ：−B電源回路
8. ⚠マークのある部品は安全重要部品です．
   交換するときは必ずティアック指定の部品を使用してください．

TEAC®

2nd Issue; November, 1984

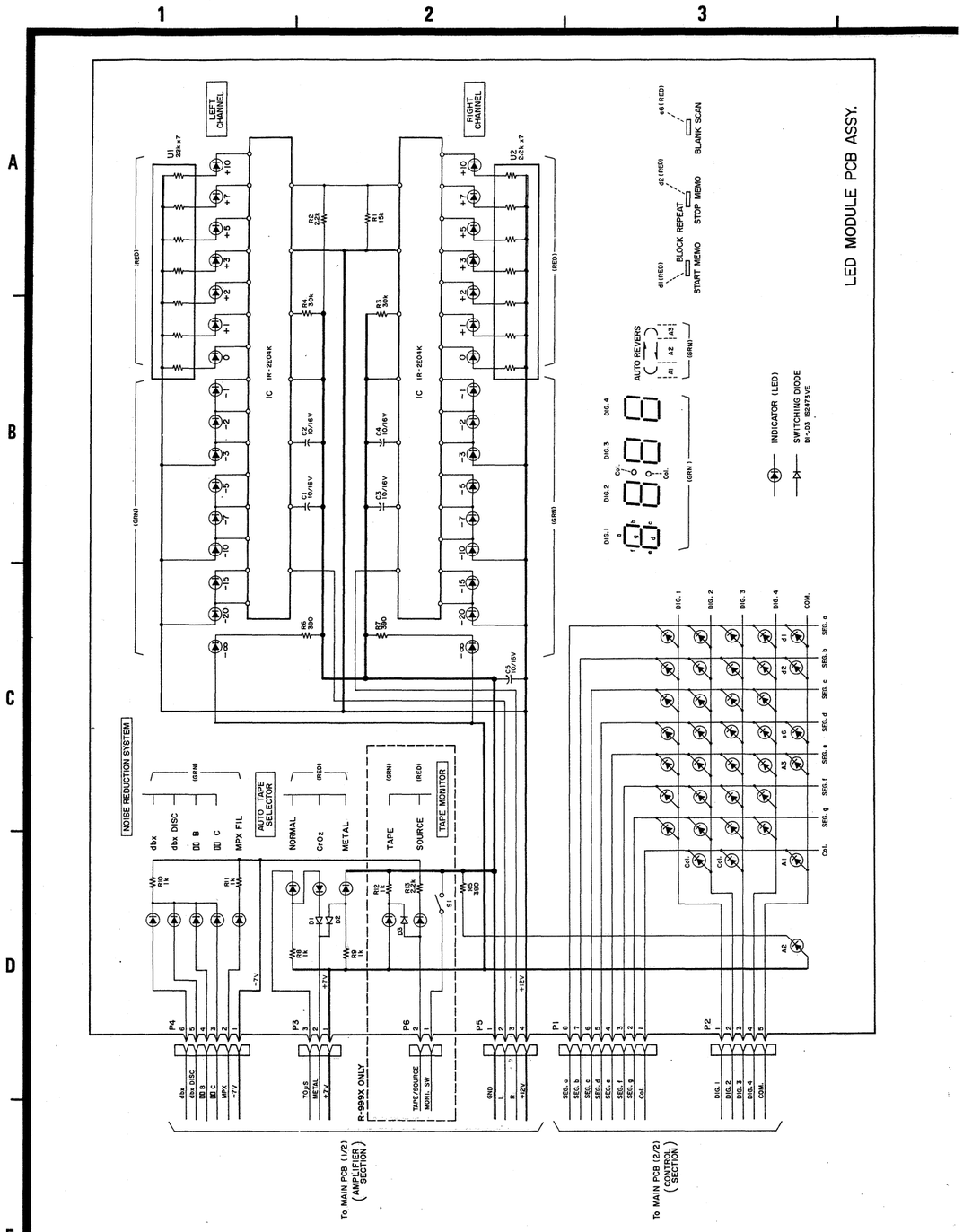

R-999X/R-777X LED PCB

2nd Issue; November, 1984

TEAC SCHEMATIC DIAGRAM R-999X

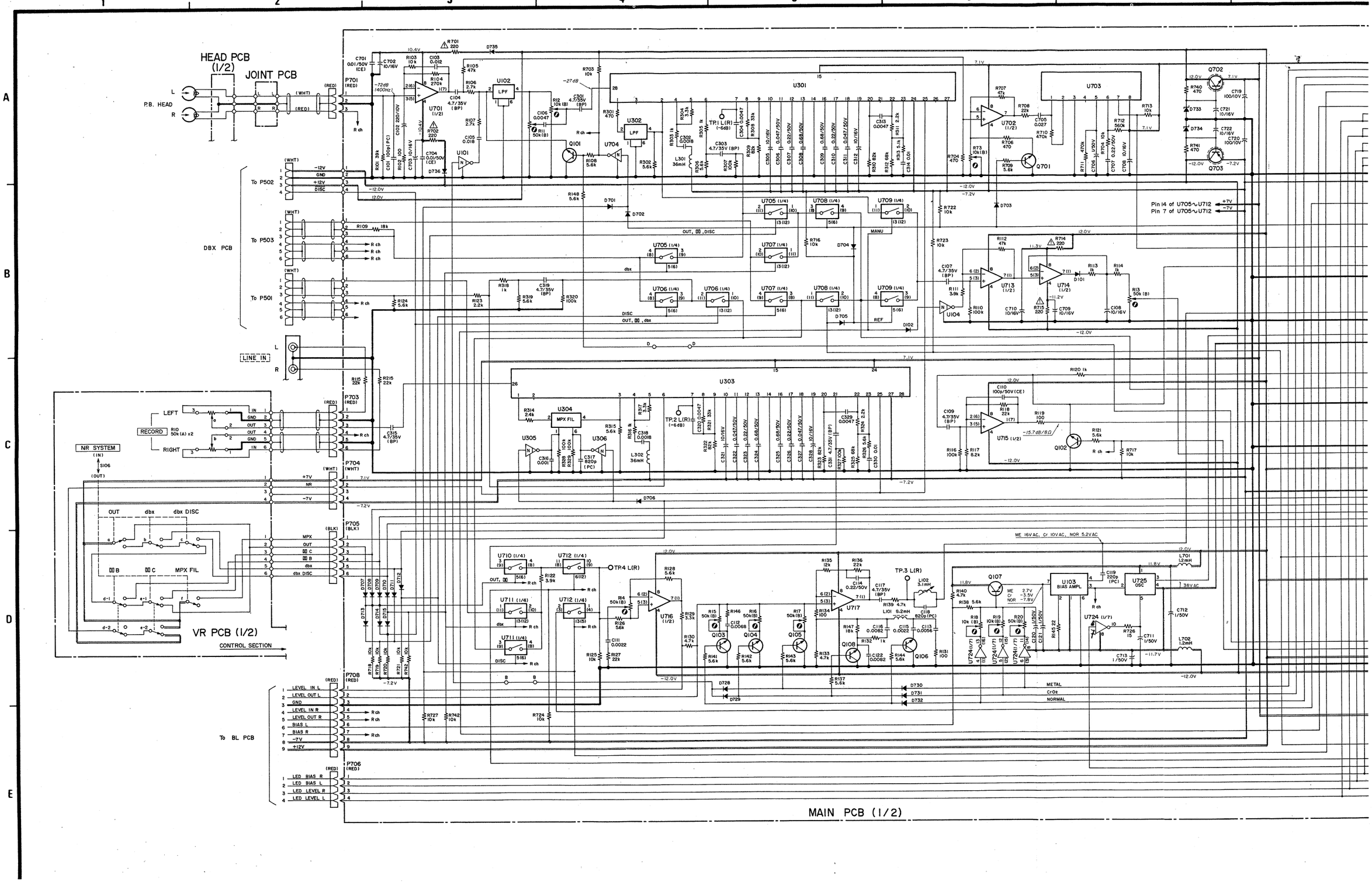

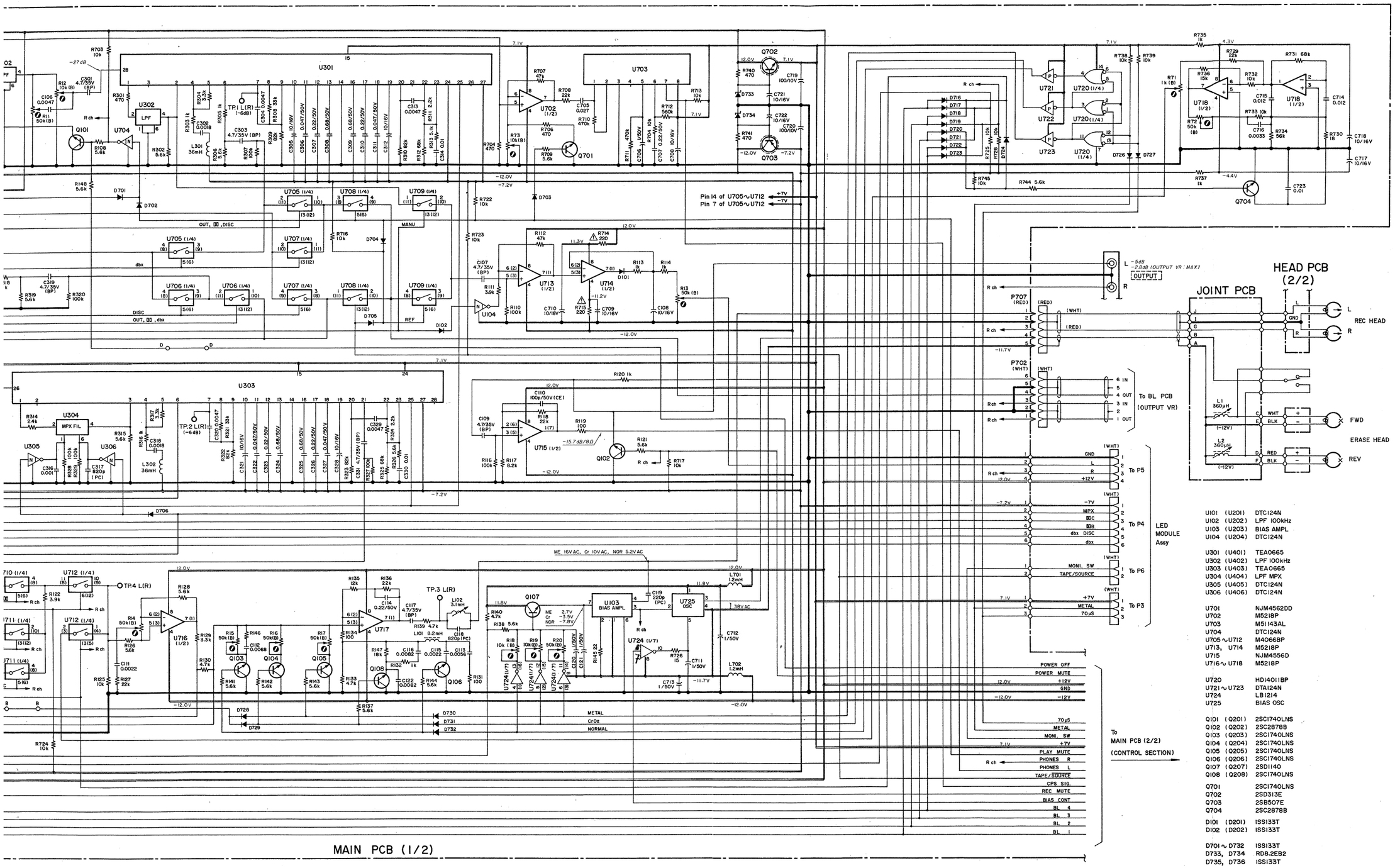

U101	(U201)	DTC124N
U102	(U202)	LPF 100kHz
U103	(U203)	BIAS AMPL
U104	(U204)	DTC124N
U301	(U401)	TEA0665
U302	(U402)	LPF 100kHz
U303	(U403)	TEA0665
U304	(U404)	LPF MPX
U305	(U405)	DTC124N
U306	(U406)	DTC124N
U701		NJM4562DD
U702		M5218P
U703		M51143AL
U704		DTC124N
U705∿U712		M4066BP
U713, U714		M5218P
U715		NJM4556D
U716∿U718		M5218P
U720		HD14011BP
U721∿U723		DTA124N
U724		LB1214
U725		BIAS OSC
Q101	(Q201)	2SC1740LNS
Q102	(Q202)	2SC2878B
Q103	(Q203)	2SC1740LNS
Q104	(Q204)	2SC1740LNS
Q105	(Q205)	2SC1740LNS
Q106	(Q206)	2SC1740LNS
Q107	(Q207)	2SD1140
Q108	(Q208)	2SC1740LNS
Q701		2SC1740LNS
Q702		2SD313E
Q703		2SB507E
Q704		2SC2878B
D101	(D201)	1SS133T
D102	(D202)	1SS133T
D701∿D732		1SS133T
D733, D734		RD8.2EB2
D735, D736		1SS133T

R-999X Amplifier Section

2nd Issue; November, 1984

TEAC SCHEMATIC DIAGRAM R-999X

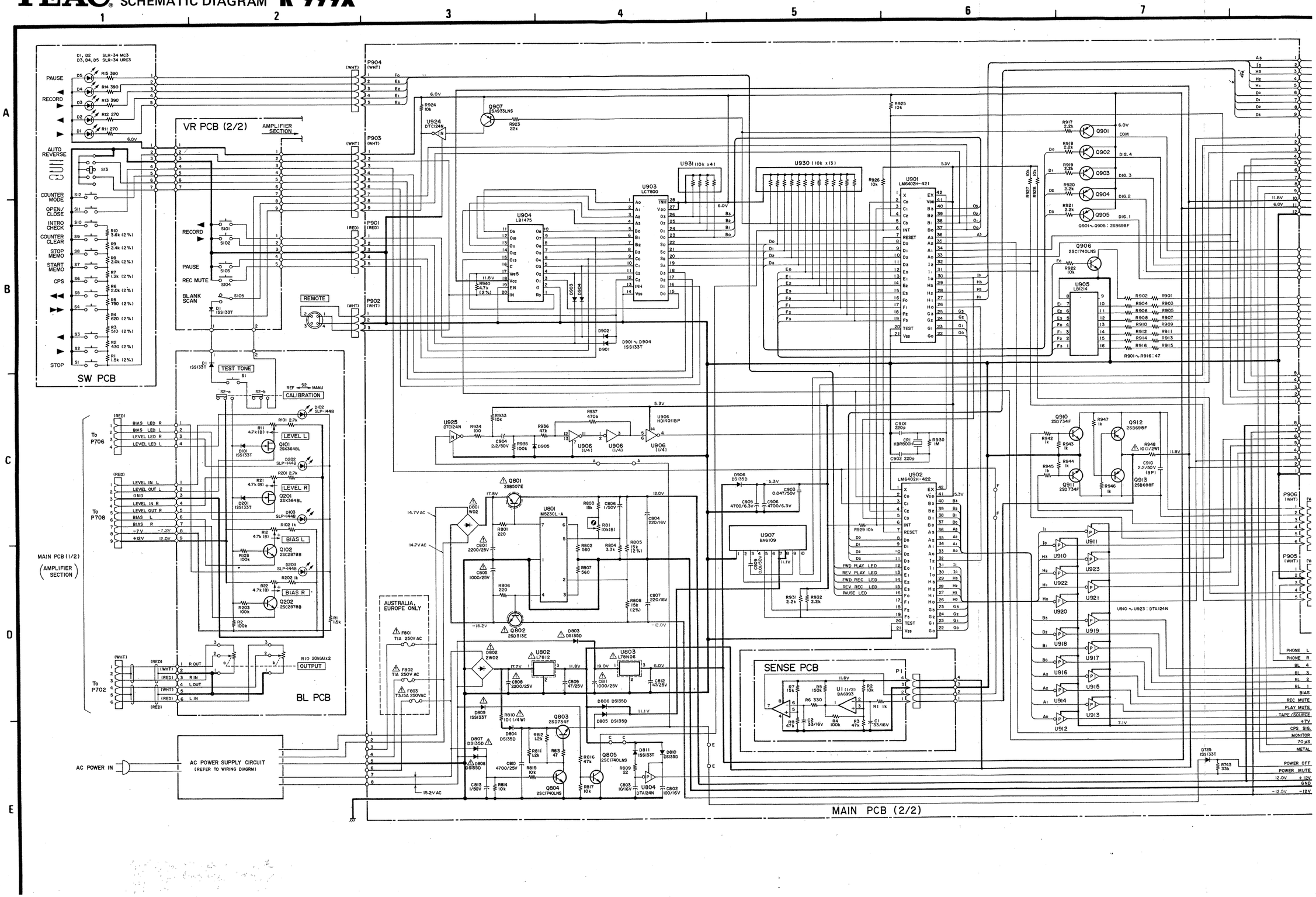

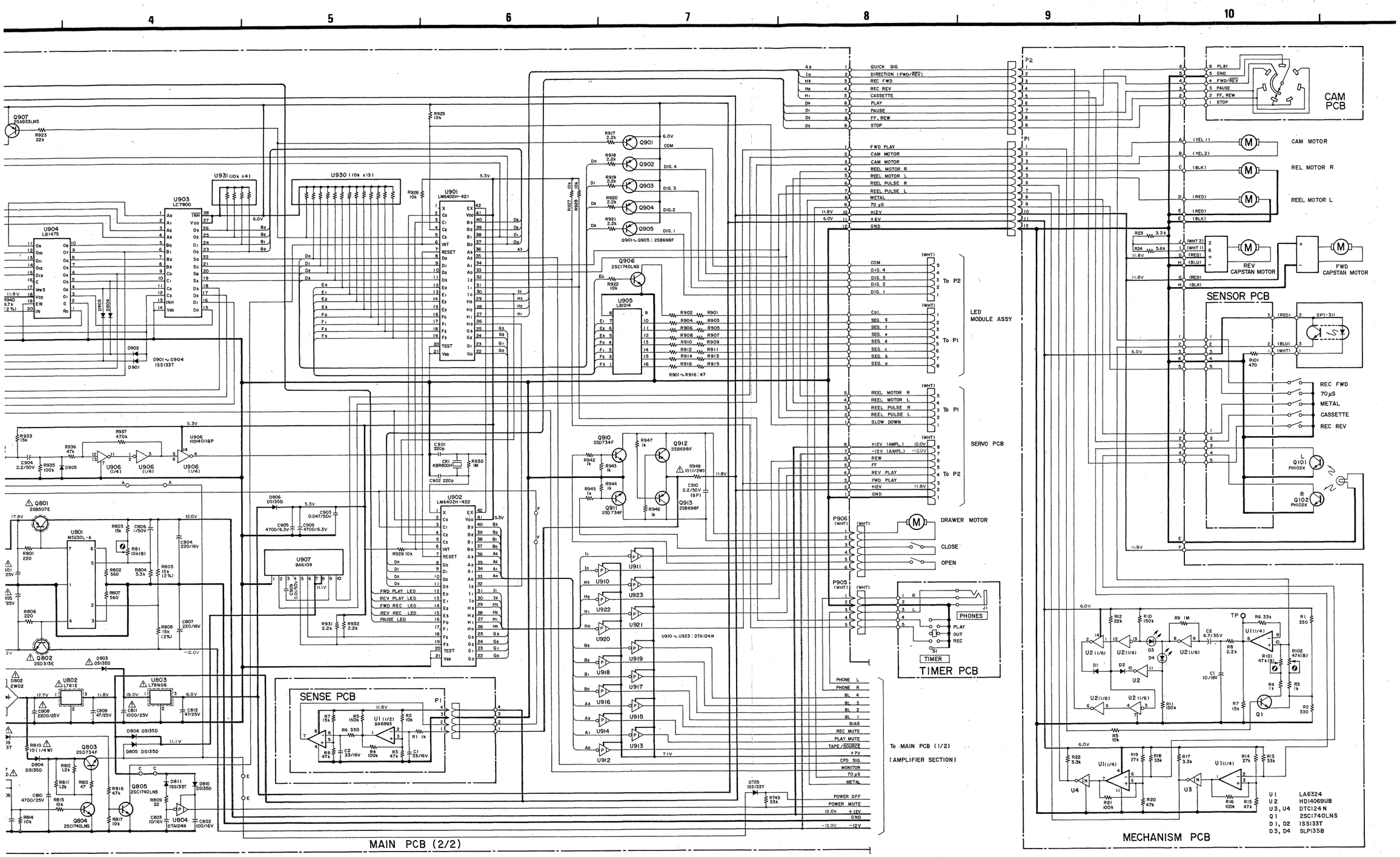

R-999X Control Section

2nd Issue; November, 1984

TEAC SCHEMATIC DIAGRAM R-999X

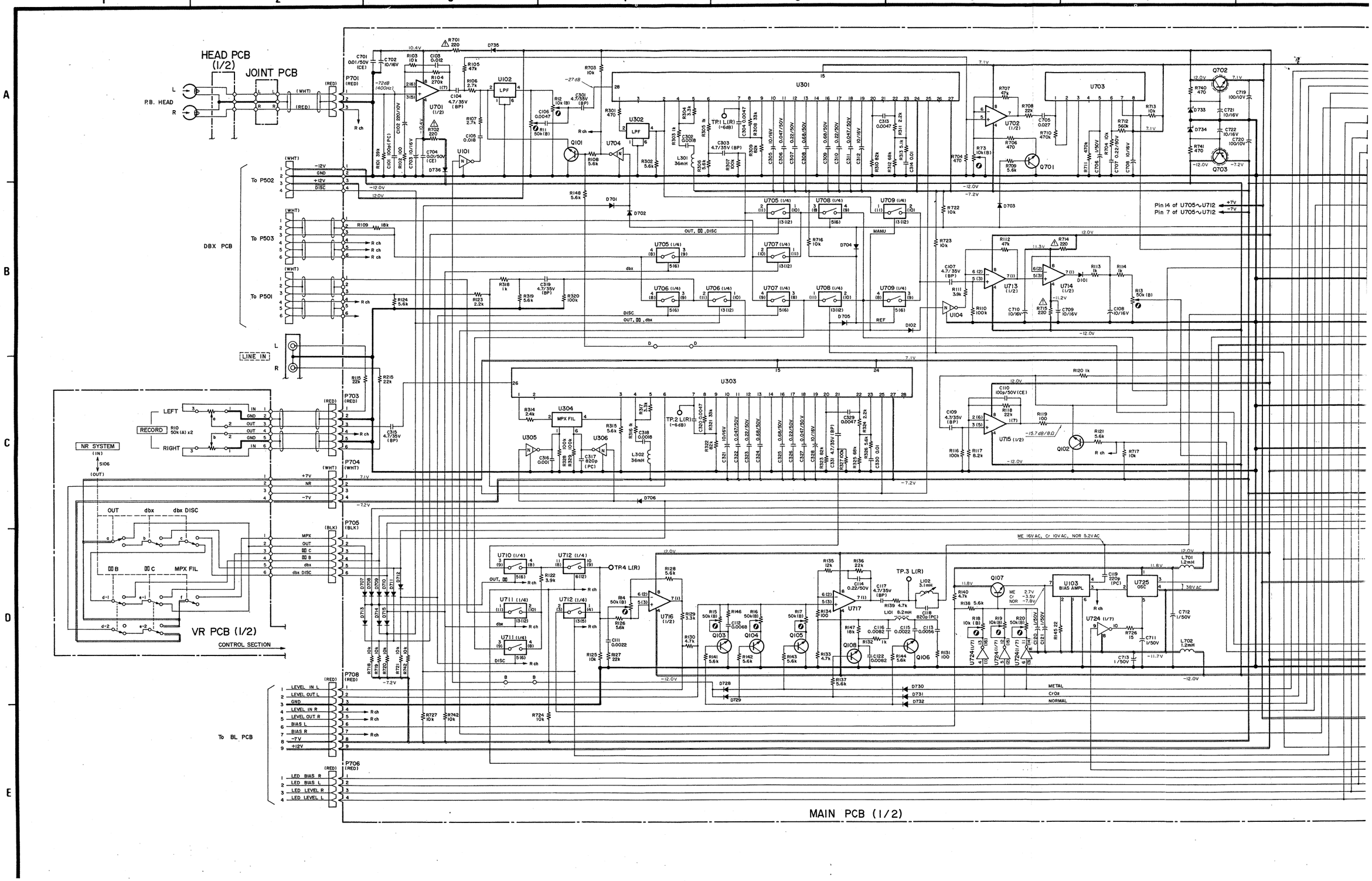

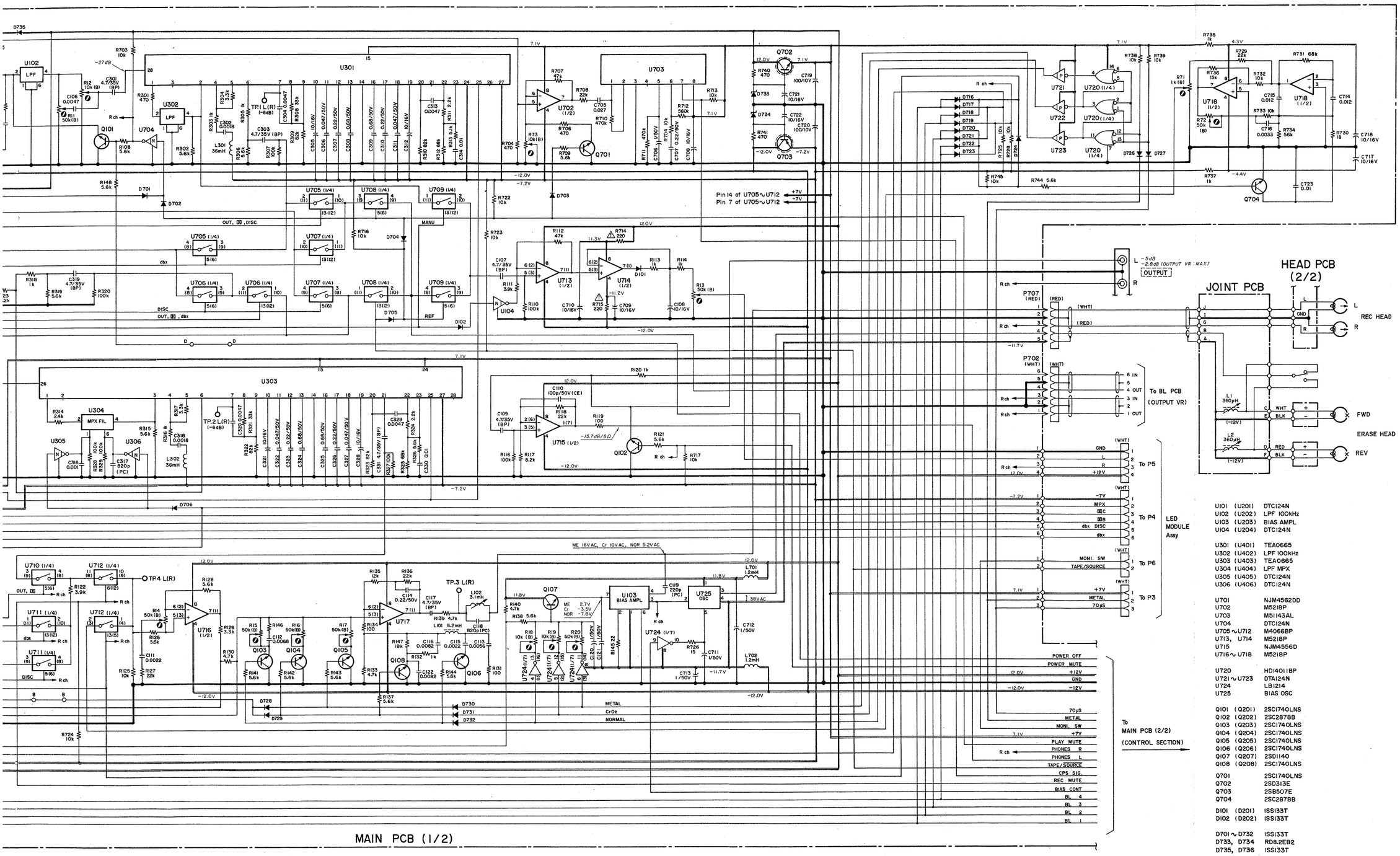

U101	(U201)	DTC124N
U102	(U202)	LPF 100kHz
U103	(U203)	BIAS AMPL
U104	(U204)	DTC124N
U301	(U401)	TEA0665
U302	(U402)	LPF 100kHz
U303	(U403)	TEA0665
U304	(U404)	LPF MPX
U305	(U405)	DTC124N
U306	(U406)	DTC124N
U701		NJM4562DD
U702		M5218P
U703		M51143AL
U704		DTC124N
U705∿U712		M4066BP
U713, U714		M5218P
U715		NJM4556D
U716∿U718		M5218P
U720		HD14011BP
U721∿U723		DTA124N
U724		LB1214
U725		BIAS OSC
Q101	(Q201)	2SC1740LNS
Q102	(Q202)	2SC2878B
Q103	(Q203)	2SC1740LNS
Q104	(Q204)	2SC1740LNS
Q105	(Q205)	2SC1740LNS
Q106	(Q206)	2SC1740LNS
Q107	(Q207)	2SD1140
Q108	(Q208)	2SC1740LNS
Q701		2SC1740LNS
Q702		2SD313E
Q703		2SB507E
Q704		2SC2878B
D101	(D201)	1SS133T
D102	(D202)	1SS133T
D701∿D732		1SS133T
D733, D734		RD8.2EB2
D735, D736		1SS133T

R-999X Amplifier Section

2nd Issue; November, 1984

TEAC SCHEMATIC DIAGRAM R-999X

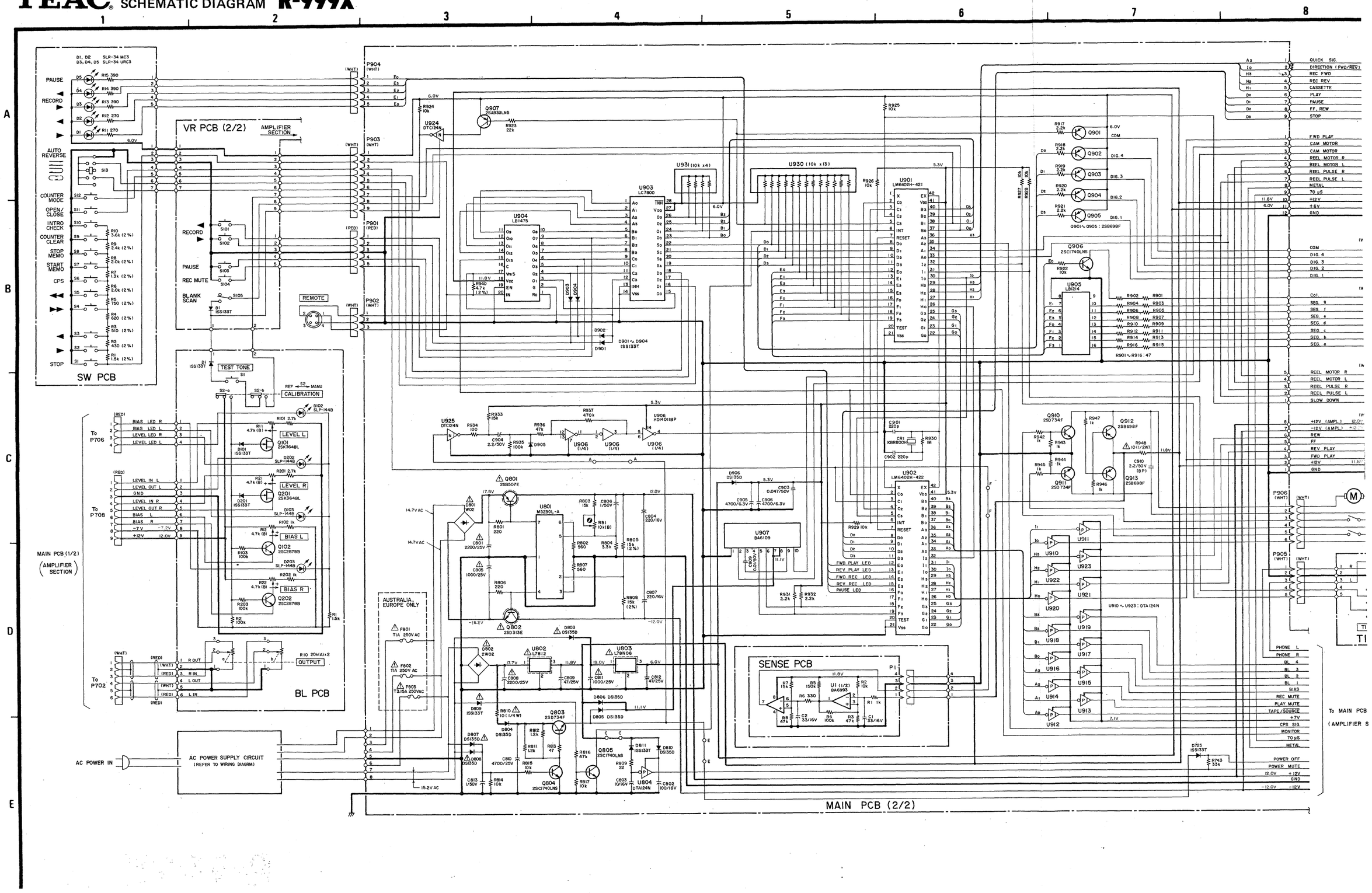

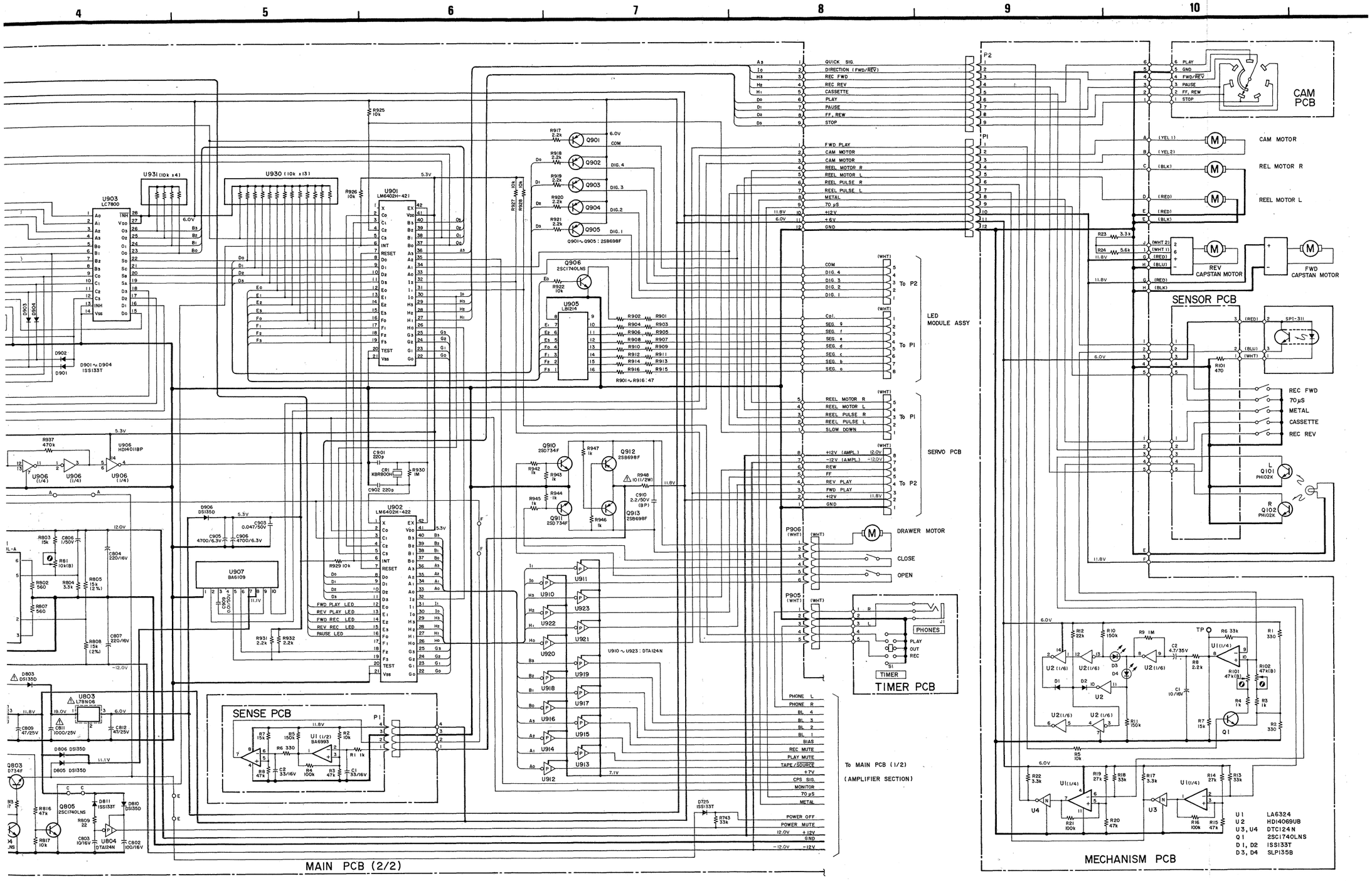

R-999X Control Section

2nd Issue; November, 1984