PRESENTATION FOR OWNERS AND EXECUTIVES

ENGINEERING MAKES MONEY FOR BUSINESS

Deep project immersion: from product physics to manufacturing, localization and launch



Pavel Samuta

Mechanical Engineer | R&D Consultant | 18+ Years

MINSK | 2026

Four numbers that make ‘cost center’ sound outdated

CASE 01

20%

removed from unit cost



product redesign

CASE 02

$500

locally made gear pair

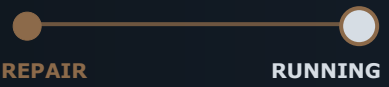

gearbox back in service

CASE 03

×2.5

service life of new parts



vs. original

CASE 04

$4.7M

savings in 2015



Zhodino CHPP

Four projects. Four P&L mechanisms. One common factor - the engineering solution reached production.

Engineering creates value before Sales issues an invoice

01	**Unit cost**	less material, fewer operations and less manual rework
02	**Downtime**	repair and local sourcing of critical components
03	**Working capital**	lower safety stock
04	**Time to launch**	fewer late-stage changes
05	**Revenue**	a product or service that did not exist before



Engineering creates value before the sale - when it changes product physics, the production route or the cost of failure.

Before the first drawing, I break the project into six levels

01 Business

objective, cost of failure, batch size, downtime

02 Physics

loads, operating modes, failures, service life

03 Options

layouts, materials, calculations

04 Manufacturing

machines, tooling, tolerances, quality control

05 Testing

criteria, prototype, iteration

06 Economics

unit cost, TCO, launch time

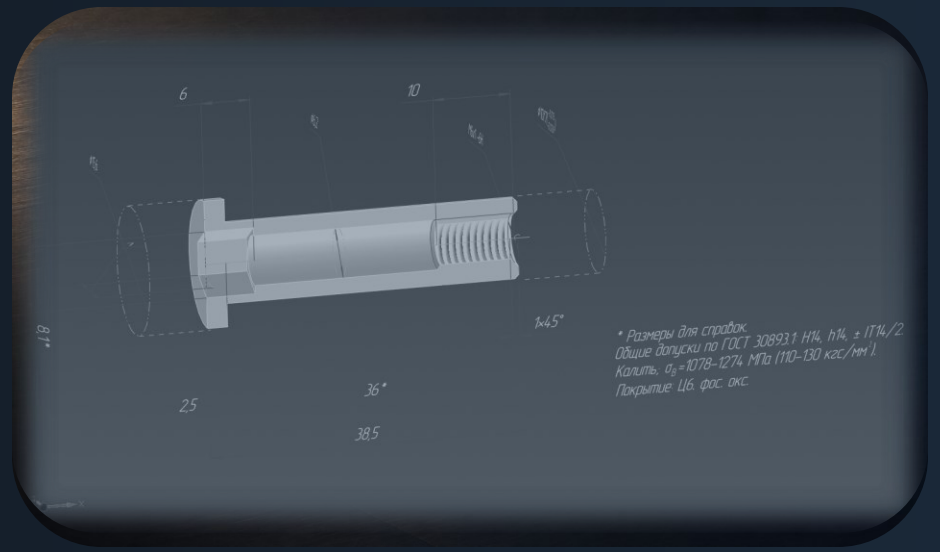

40% of project time goes into analysis before modelling in my strongest projects

Experience speeds up the questions. Deep immersion is still essential.

20% of unit cost removed with no loss of strength

COST INDEX, BEFORE = 100



-20%

unit cost with no loss of strength

- **Functions**
  every component was assigned a function, load and cost
- **Physics**
  stresses and tolerances replaced assumptions
- **Manufacturing**
  complex features replaced with standard components

Right-first-time assembly. Less rework. Same strength.

$500 put the gearbox back in service

$500

cost of a locally made gear pair

SERVICE LIFE VS. ORIGINAL, ×

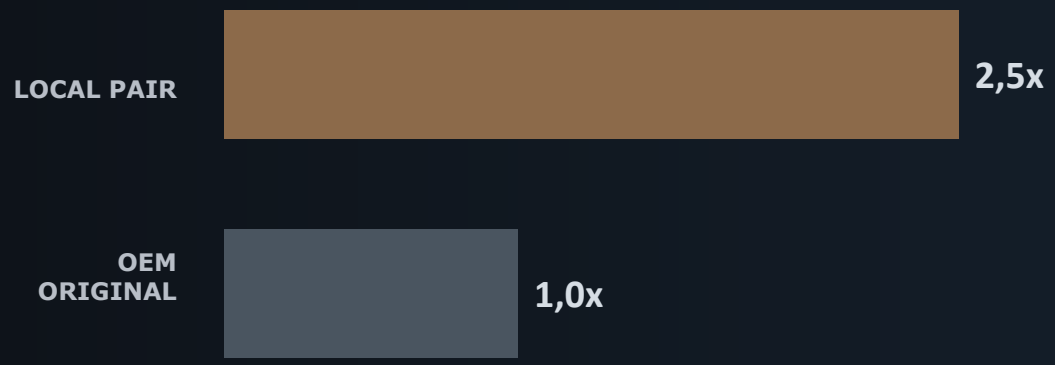



GEOMETRY + MATERIAL + HEAT TREATMENT

The unavailable assembly returned to service without waiting for an overseas shipment.

A local-fuel boiler saved $4.7M in 2015

2009
project commissioned

60 t/h
steam capacity

$4.7M
savings in 2015





Fuel flexibility became a financial result: peat briquettes, wood chips and milled peat replaced dependence on a single fuel.

Reverse engineering turns a third-party part into a company asset

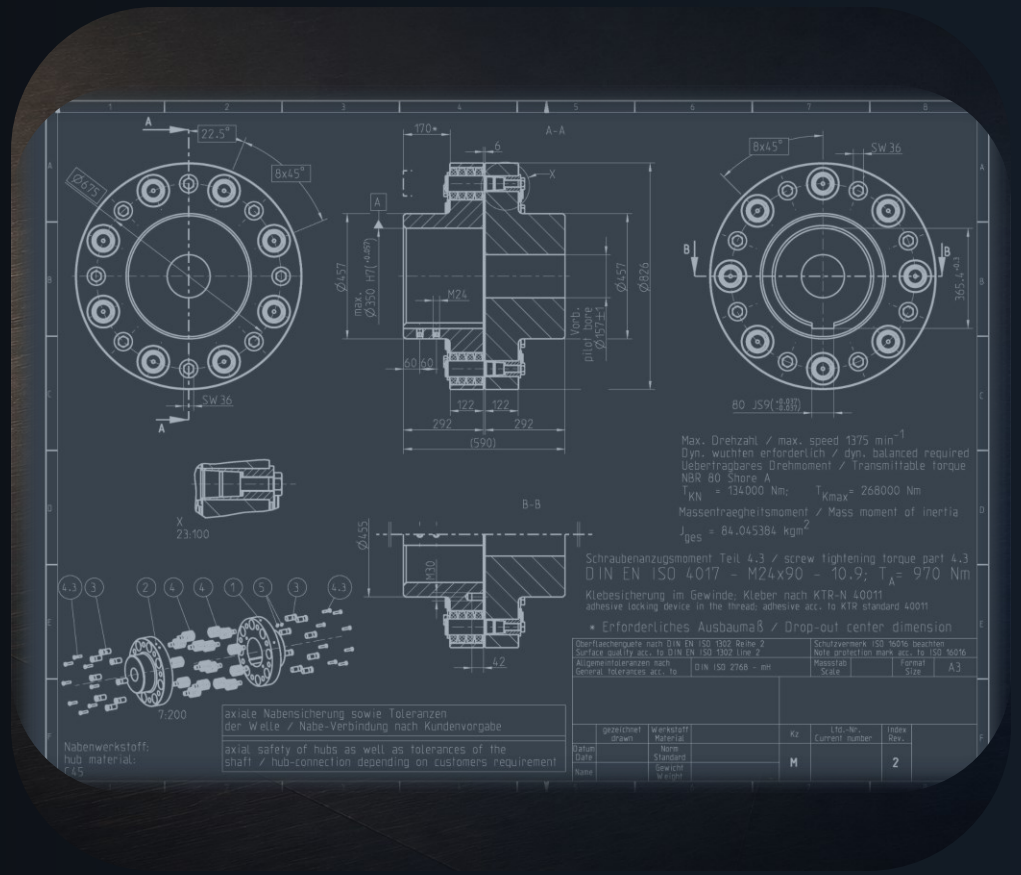

01 **Existing part**
measurement, defects, function

02 **3D geometry**
datums, interfaces, inspection

03 **Material and processes**
hardness, heat treatment, coating

04 **Engineering package**
drawings, tolerances, acceptance

05 **Production route**
supplier, QC, testing

RESULT: OWN DRAWINGS · REPEATABLE SOURCING · SECOND SUPPLIER

I select a manageable manufacturing risk, not just a factory

THE SITE PASSES FIVE CHECKS

01	**Technology**	machinery, tooling, processes and actual capacity
02	**Quality**	in-process QC, not only a sales deck
03	**People**	workforce skills and engineering discipline
04	**Lead time**	capacity, supply chain and backup plan
05	**Security**	contract, engineering data and IP protection



PROFESSIONAL NETWORK BY GEOGRAPHY

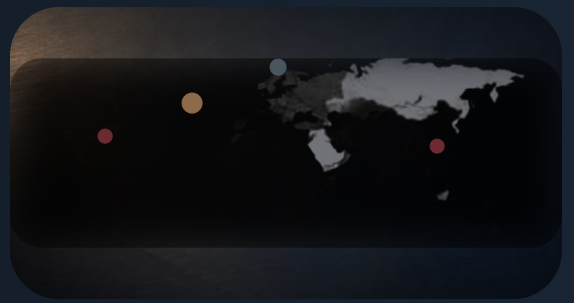

70% Belarus

20% Russia

10% international

49,776 contacts · ≈1,700 international

Translation into 120 languages does not replace engineering localization

120

languages for drawings, manuals and catalogs

FOUR STEPS OF ENGINEERING LOCALIZATION

01 Translation
terminology and symbols

02 Standards
ISO · DIN · ASME · CE

03 Drawing
units, tolerances, materials

04 Release
manufacturing engineer · QC · supplier

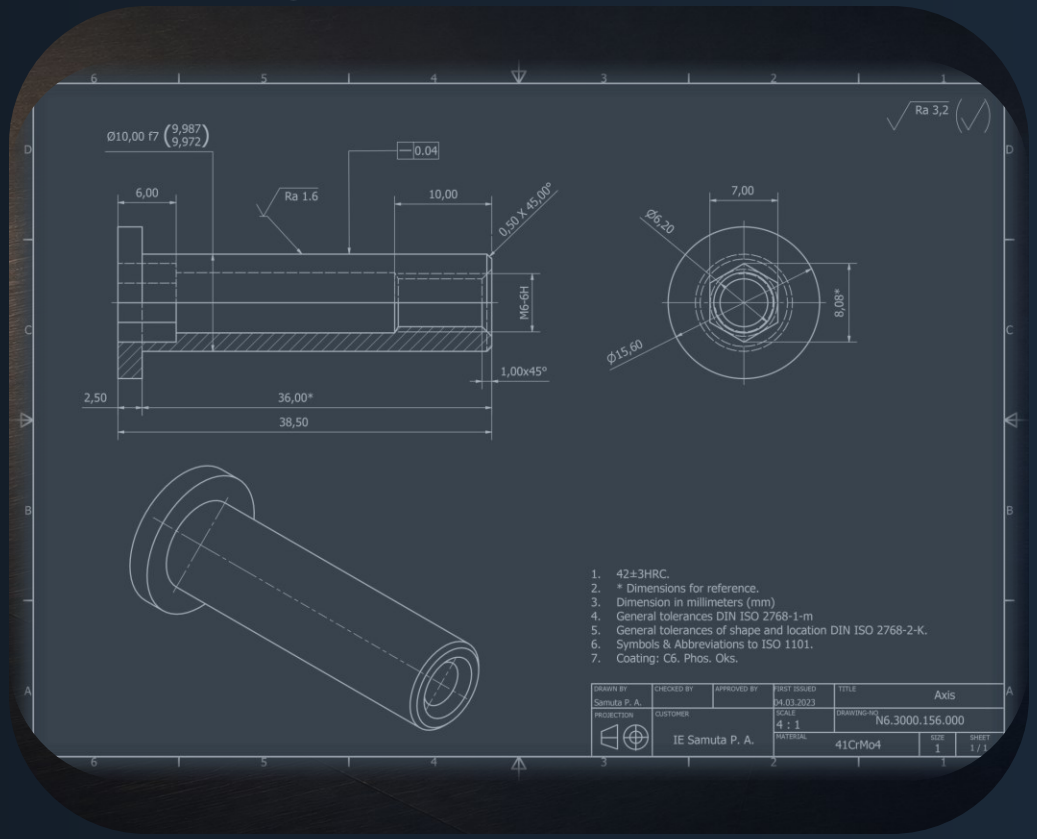

120 languages carry the meaning. Standards and drawings enable production and acceptance.

Translation alone is not enough. The product must be manufacturable and accepted.

Clients notice what never fits into the specification



GlobalClean

AUTOMATED CAR WASH

‘A complete set of drawings and models. We reduced the time and resources needed to upgrade the equipment.’

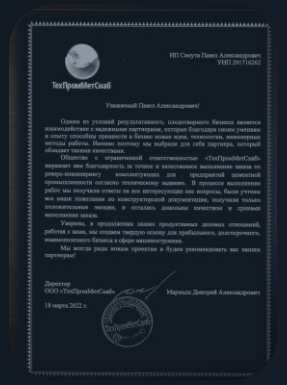

TekhPromMetSnab

18 MARCH 2022

‘All drawing requirements were addressed. We were satisfied with the quality and delivery time.’

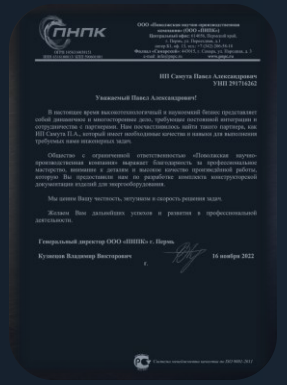

PNPK, Perm

16 NOVEMBER 2022

‘Professionalism, attention to detail and speed in solving engineering challenges.’

THE SAME PATTERN ACROSS THREE REFERENCES	DETAILS	DELIVERY	DRAWINGS	OUTCOME
GlobalClean	✓	✓	✓	✓
TekhPromMetSnab	✓	✓	✓	✓
PNPK	✓	✓	✓	✓

Clients did not pay for CAD lines. They paid for a predictable outcome.

NEXT STEP

Before you buy a new assembly, ask: can the problem itself be redesigned?

01 Deep engineering audit and development through launch

02 Reverse engineering, localization and supplier independence

03 Production partner selection + export documentation in up to 120 languages

Engineering must show up in the P&L. Otherwise it is an expensive CAD club.

Minsk | International Industrial Projects

samuta
engineering & technology

PAVEL SAMUTA

Mechanical Engineer | R&D Partner | 18+ Years

idea@pavelsamuta.com
+375 29 276 62 70
pavelsamuta.com
linkedin.com/in/pavelsamuta

Tax ID (UNP) 291716262
Tax Authority: 1 Mar 2022 · State Register: 28 Feb 2022