1

PAVEL ALEXANDROVICH SAMUTA

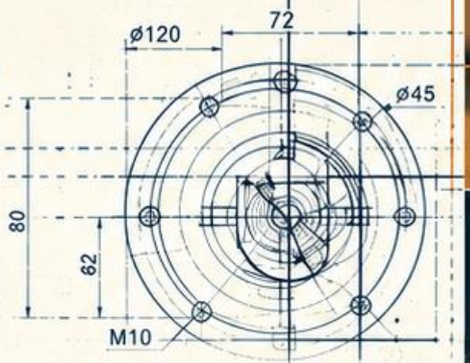

- Individual Entrepreneur
- Independent Technical Partner for Industrial Enterprises
- Mechanical Engineer
- Speaker
- Author of an expert blog



Pavel Samuta

MINSK, BELARUS
PAVELSAMUTA.COM

2

OVER 18 YEARS IN INDUSTRIAL ENGINEERING

SINCE 2007

600+
engineering projects and tasks

- Mechanical Engineering
- Energy Sector
- Industrial Equipment
- New Product Development

Cooperation with enterprises in Belarus and the CIS countries.



3

EDUCATION AND SCIENTIFIC IDENTIFICATION

Brest State Technical University (2011)

Mechanical Engineering Technology
Automated Manufacturing Technology

Brest State Polytechnic College (2007)

Metal-Cutting Machine Tools and Tooling
Technical Operation of CNC Machine Tools and Robotic Systems



ORCID
0009-0001-9490-5630

Web of Science ResearcherID
ABR-2194-2022



4

RESULTS THAT WORK FOR ENTERPRISES

$4,7 million
economic impact from the modernization of the Zhodino CHP plant

–35%
product cost reduction and –15% production cycle time

5x
reduction in refurbishment costs and 2.5x longer service life of the industrial assembly

Reverse engineering, import substitution, production localization, and restoration of lost technical documentation.



5

TODAY

Expert Blog

9,500
FOLLOWERS
ON ZEN

14,500
FOLLOWERS
ON LINKEDIN

Publications

Onliner, RZD-Partner,
General Director,
Komsomolskaya Pravda,
Myfin.by, European Security & Defence,
and other media

Speaker

Interviews, podcasts,
professional events



MY SPECIALIZATION:

Transforming complex technical challenges into viable industrial products, driving cost reductions, creating new revenue streams, and delivering measurable economic results.