fri.tech.

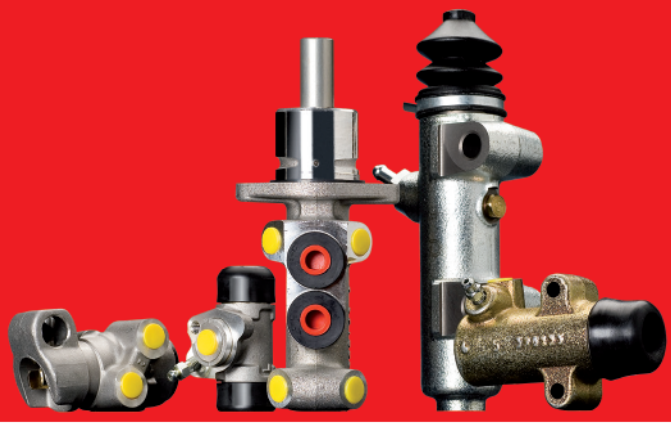

BRAKE & CLUTCH
HYDRAULICS
2016

metelligroup
AUTOMOTIVE PASSION

INDICE - INDEX - INDEX - INHALT - INDICE

Abbreviazioni - Abbreviations - Abréviations - Zeichenerklärung - Abreviaturas	pag. IV
Simbologia - Symbols - Symbologie - Symbole - Simbologia	pag. V
Indice marca e modello - Make and model Index Index marque et modèle - Inhalt Marke und Modell - Indice marca y modelo	pag. 1
Applicazioni - Applications - Applications - Anwendungen - Aplicaciones	pag. 1
Lista dei riferimenti - Cross References List Table equivalences - Vergleichsliste - Lista de equivalencias	pag. 555
Lista numerica - Numerical list - Liste numérique - Teilnummerliste - Lista numerica	pag. 595
Foto pompe freno - Brake master cylinders photos Maîtres cylindre de frein photos - Hauptzylindern fotos - Bombas de freno fotos	pag. 626
Condizioni di vendita - Conditions of sale Conditions de vente - Verkaufsbedingungen - Condiciones de venta	pag. 692

La Metelli nasce il 1° Agosto 1962 quale officina per lavorazioni meccaniche. Nel 1970 prende avvio la produzione delle parti motore e già nel 1975 inizia la fabbricazione delle parti freno e frizione idrauliche. Un ulteriore impulso all'espansione giunge nel 1991 con l'installazione della linea per la produzione dei giunti omocinetici a cui si aggiungono i semiassi nel 1999. Nel luglio del 2001 la Metelli S.p.A. acquista il 100% della società GRAF S.p.A., produttrice di pompe acqua e dischi freno. Nel 2008 vengono introdotte le pastiglie freno e nel 2010 le ganasce freno a completamento della gamma frenante. Nel 2012 vengono lanciati il Kit distribuzione con pompa acqua e il kit cuffia. A fine 2014 il gruppo Metelli acquisisce le società Fri.Tech. e Trusting, aziende italiane produttrici di pastiglie e ganasce freno.

Metelli was established on 1st August 1962 as a mechanical engineering workshop. In 1970, the company started producing engine parts and, in 1975, began manufacturing hydraulic brake and clutch parts. A further boost to expansion came in 1991 with the installation of the line for the production of constant velocity joints, later expanded in 1999 to include driveshafts. In July 2001, Metelli Co. acquired 100% of GRAF Co., a leading manufacturer of water pumps and brake discs. In order to complete the brake parts range Metelli introduced brake pads in 2008 and brake shoes in 2010. In 2012 Metelli introduced the timing belt Kit with water pump and boot kit. At the end of 2014, Metelli Group acquires Fri.Tech. and Trusting companies, Italian manufacturers of brake pads and brake shoes

La société Metelli a été créée le 1er août 1962 comme atelier d'usinage. En 1970, l'entreprise a démarré la production de composants pour l'industrie des moteurs et a lancé en 1975 la fabrication de pièces de freinage et d'embrayage hydrauliques. En 1991, dans le cadre de sa politique d'expansion, la société a installé une nouvelle ligne pour la production de joints homocinétiques, à laquelle s'est ajoutée en 1999 celle des transmissions. En juillet 2001, Metelli S.p.A. a rachèté la totalité de la société GRAF S.p.A., producteur leader de pompes à eau et de disques de frein. En 2008 nous avons introduits dans notre gamme les Plaquettes de Freins et en 2010 les Machoires de Frein à complètement de notre programme de freinage. En 2012 nous avons introduits les kit distribution avec pompe à eau et les kit de soufflet de transmission. Fin 2014 Metelli Group reprend les sociétés Fri.Tech. et Trusting qui sont des sociétés italiennes qui fabriquent plaquettes de frein et mâchoires de frein.

Die Firma Metelli wurde am 1. August 1962 als mechanische Werkstätte gegründet. 1970 beginnt die Produktion von Motorteilen und bereits 1975 die Fertigung von hydraulischen Bremsenteilen und Kupplungsteilen. Einen weiteren Impuls zur Expansion erhält die Firma im 1991 durch die neue Produktionslinie Radgelenke und im Jahre im 1999 kommen dann Antriebswellen hinzu. Im Juli 2001 aquiriert die Metelli S.p.A. zu 100% die Gesellschaft GRAF S.p.A. auf, eine leitende Herstellerfirma von Wasserpumpen und Bremsscheiben. Im 2008 haben wir Bremsbelaege und im 2010 Bremsbacken in unserem Produktpalette eingefuehrt um unser Bremshydraulikprogramm zu vollstaendingen. Im Jahr 2012 hat Metelli Zusaetzlich Spannrollen Kit mit Wasserpumpe und Faltenbalg-Satz im Programm vorgestellt. Am Ende 2014 hat die Firma Metelli zwei italienische Firmen erworben: Die Firma Fri.Tech. Hersteller von Bremsbelaege und die Firma Trusting Hersteller von Bremsbacken.

La firma Metelli nace el 1 de Agosto de 1962 como taller para mecanizaciones. En 1970 comienza la realización de piezas para motores y ya en 1975 inicia la fabricación de piezas para frenos y embragues hidráulicos. Un mayor impulso a la expansión llega en 1991 con la instalación de una línea para la producción de juntas homocinéticas a las que se añadirán los semiejes en 1999. En el mes de Julio de 2001 Metelli S.p.A. adquiere el 100% de la firma GRAF S.p.A., fabricante lider de bombas de agua y discos de freno. En 2008 se introduce la gama de pastillas de freno y en 2010 la de zapatas de freno para completar la gama de frenos. Los kit distribución con bomba de agua y los fuelle se introdujeron en 2012. En el año 2014 el Grupo Metelli adquiriò las empresas Fri.Tech. y Trusting, empresas italianas productoras de pastillas y zapatas de freno.

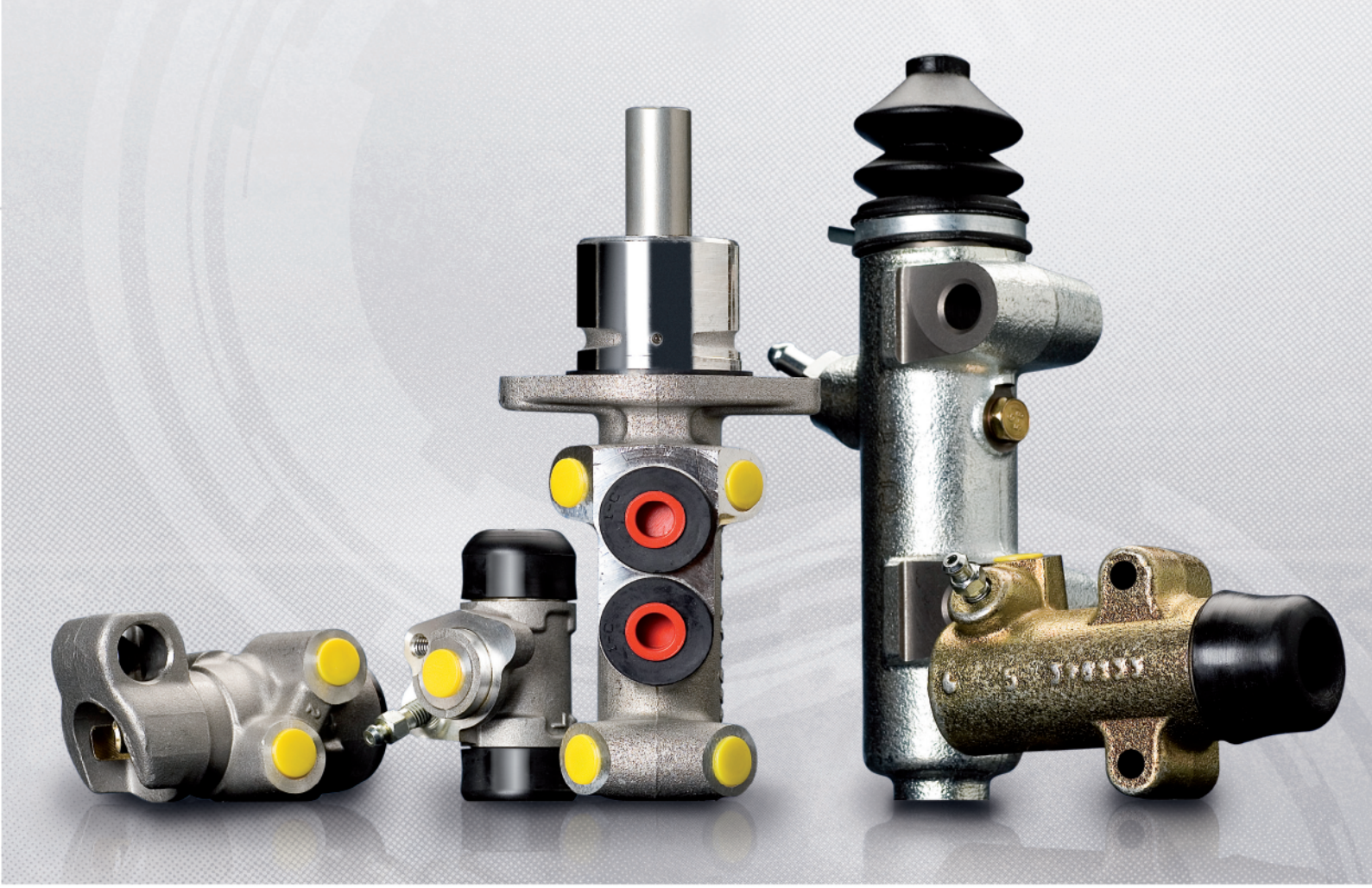

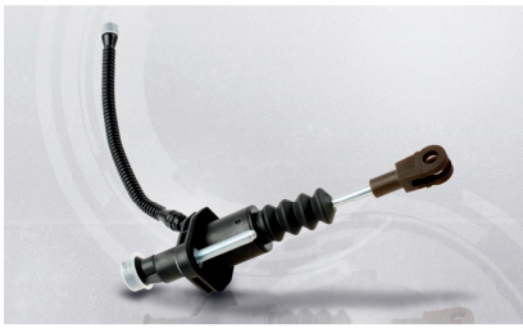

VCA

CERTIFICATE OF REGISTRATION

Certificate Number 2000-6763

This is to certify that the Quality system of:

FRI. TECH. S.R.L.

VIA GRATTERIA 3/L
12084 MONDOVÌ
ITALY

is registered as complying with the requirements specified in:

ISO 9001:2008

Within the scope (for which VCA is accredited):

Design, development and production of brake pads for disc brakes. Sale of components for braking systems.

Progettazione, sviluppo e produzione di pastiglie per freni a disco. Commercializzazione di componenti per sistemi frenanti.

Signed on behalf of the VCA by authority of the Chief Executive

Certification Issue Date 04-01 April 2004
Certification Initial Approval Date 01 June 2010
Certification Issue Date 01 June 2010
Certification Expiry Date 04 September 2010
Last Amended 04 September 2010

www.dft.gov.uk/vca

	Simbologia	Symbols	Symbologie	Symbole	Simbologia
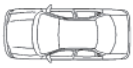	Marca e modello	Make and model	Marque et modèle	Marke und Modell	Marca y modelo
	Anno	Year	Année	Baujahr	Año
	Cilindretto freno **(CF...)**	Wheel cylinder **(CF...)**	Cylindre de roue **(CF...)**	Radzylinder **(CF...)**	Cilindro de rueda **(CF...)**
	Pompa freno **(PF...)**	Brake master cylinder **(PF...)**	Maître cylindre de frein **(PF...)**	Hauptzylinder **(PF...)**	Bomba de freno **(PF...)**
	Correttore di frenata **(CT...)**	Pressure regulating valve **(CT...)**	Correcteur de freinage **(CT...)**	Bremskraftregler **(CT...)**	Corrector de frenado **(CT...)**
	Cilindro frizione **(CZ...)**	Slave cylinder **(CZ...)**	Recepteur d'embrayage **(CZ...)**	Nehmerzylinder **(CZ...)**	Cilindro esclavo de embrague **(CZ...)**
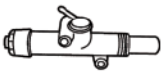	Pompa frizione **(PZ...)**	Clutch Master cylinder **(PZ...)**	Emetteur d'embrayage **(PZ...)**	Geberzylinder **(PZ...)**	Cilindro principal de embrague **(PZ...)**
F/R	Anteriore / Posteriore	Front / Rear	Avant/ Arrière	Vorn / Hinten	Delantero / Trasero
L/R	Sinistro / Destro	Left / Right	Gauche / Droite	Links / Rechts	Izquierda / Derecha
FRITECH ref.	**FRITECH** ref.	**FRITECH** part No.	Réf. **FRITECH**	**FRITECH** Nr.	Ref.**FRITECH**
	Impianto frenante	Brake system	Systéme de freinage	Bremssystem	Sistema de frenada
DIMENSIONS mm.	Dimensioni mm.	Dimensions Millimeters	Dimensions mm.	Maße mm.	Dimensiones mm.
NOTE	Note	Remarks	Remarques	Anmerkungen	Anotaciónes

	Abbreviazioni	**Abbreviations**	**Legendes**	**Zeichenerklärung**	**Abreviaturas**
-	Senza	Without	Sans	Ohne	Sin
(-)	Doppio circuito anteriore/posteriore	Front/Rear double circuit	Double circuit avant/arrière	Zweikreis Vorderseitig-Rückseitig	Circuito doble anterior/posterior
(x)	Doppio circuito ad "x"	"x" Double circuit	Double circuit en "x"	Zweikreis in "x-form"	Circuito doble en "x"
+	Con	With	Avec	Mit	Con
16v	16 Valvole	16 Valves	16 Soupapes	16 Ventile	16 Válvulas
3/4/5p	3/4/5 Porte	3/4/5 Doors	3/4/5 Portes	3/4/5 -Türig	3/4/5 Puertas
4/5 Sp.	N° Rapporti del cambio	Number of gears	Nombre de vitesse	Ganganzahl	Número de engranes
4WD	Trazione integrale	Four wheel drive	4 Roues motrices	Vierradantrieb	Traccion integral
A/T	Cambio automatico	Automatic transmission	Automatique	Schaltgetriebe	Cambio automatico
AA	Correzione automatica	Automatic adjuster	Ajustage automatique	Automatische Naschstellung	Reajuste automatico
ABS	Sistema di frenata antibloccaggio	Anti-lock brake system	Systéme anti-blocage	Anti Blockier System	Sistema de frenado anti bloque
Ake	Akebono	Akebono	Akebono	Akebono	Akebono
All models	Tutti i tipi	All models	Tous modèles	Alle Modelle	Todos modelos
Alu	Alluminio	Aluminium	Aluminium	Aluminium	Aluminio
Ambulance	Ambulanza	Ambulance	Ambulance	Krankenwagen	Ambulancia
Ap	Ap Lockheed	Ap Lockheed	Ap Lockheed	Ap Lockheed	Ap Lockheed
ASC	Controllo automatico di stabilità	Automatic stability control	Contrôle de stabilité automatique	Automatische Stabilitäts-Kontrolle	Control automático de tracción
ASR	Controllo anti pattinaggio	Traction control system	Contrôle anti-patinage	Anti-Schlupf-Regulierung	Control antiderrapaje
Ate	Ate-Teves	Ate-Teves	Ate-Teves	Ate-Teves	Ate-Teves
Autority Car	Veicolo per enti statali	Autority Car	Véhicule communal	Behörde	Vehiculos oficiales
Axle	Assale	Axle	Essieu	Achse	Eje
Bch	Bosch	Bosch	Bosch	Bosch	Bosch
Bdx	Bendix	Bendix	Bendix	Bendix	Bendix
Berlina	Berlina	Saloon	Berline	Limousine	Berlina
BFR	Vaschetta liquido freni	Brake fluid reservoir	Réservoir	Bremsflüssing-Keitsbehälter	Depósito de liquido de frenos
Bre	Brembo	Brembo	Brembo	Brembo	Brembo
BZ	Benzina	Petrol	Essence	Benzin	Gasolina
Carb.	Carburatore	Carburetor	Carburateur	Vergaser	Carburador
CF	Correttore di frenata	Pressure regulating valve	Correcteur de freinage	Bremskraftregler	Corrector de frenada
-Ch	Fino telaio N.	To chassis No.	Jusqu'au chassis N.	Bis Fahrgestell Nr.	Hasta bastidor
Ch-	Dal telaio N.	From chassis No.	Depuis chassis N.	Ab Fahrgestell Nr.	Del bastidor N.
Cit	Citroen	Citroen	Citroen	Citroen	Citroen
Clim.	Aria condizionata	Air conditioning	Air conditionné	Klimaanlage	Aire acondicionado
Connection	Connessione	Connection	Piquage	Anschluß	Conexión
CRCI	Cilindro con valvola integrata di riduzione pressione di frenata	Wheel cylinder with integrated brake pressure reducing valve (PCRVI)	Cylindre de roue avec compensateur intégré (CRCI)	Radzylinder mit integriertem Bremsdruckregler	Cilindro de rueda con válvula reguladora de presión de frenada incorporada

	Abbreviazioni	Abbreviations	Legendes	Zeichenerklärung	Abreviaturas
CV	Cavalli vapore	HP (Horse power)	CV (Cheval-vapeur)	PS (Pferdestärke)	Caballos de vapor
Cyl.	Cilindro	Cylinder	Cylindre	Zylinder	Cilindro
D	Diesel	Diesel	Diesel	Diesel	Diesel
Del	Delco	Delco	Delco	Delco	Delco
Diam.	Diametro	Diameter	Diamétre	Diameter	Diámetro
Disability Vehicle	Veicoli per handicappati	Disability Vehicle	Véhicule pour handicapés	BehindertenFahrzeug	Vehículo para Minusválidos
Disc	Disco	Disc	Disque	Scheibe	Discos
Driving school	Scuola guida	Driving school	Véhicule école	Fahrschulausführung	Versión Autoescuela
Drum	Tamburo	Drum	Tambour	Trommel	Tambores
DSC	Controllo dinamico di stabilità	Dynamic stability Control	Contrôle dynamique de stabilité	Dynamische Stabilitätsprogramm	Control dinámico de estabilidad
EDS	Bloccaggio elettronico del differenziale	Electronic differential lock	Blocage de différentiel electronique	Elektronische Differentialsperre	Bloqueo electrónico diferecial
-Eng.	Fino a motore N.	To engine No.	Jusqu'au moteur N.	Bis Motor Nr.	Hasta motor N.
Eng.-	Dal motore N.	From engine No.	Depuis moteur N.	Ab Motor Nr.	Del motor N.
EPB	Freno di stazionamento elettrico	Electronic parking brake	Frein d'arrêt électroni-que	Elektronischer Feststellbremse	Freno de detención electrónico
ESP	Controllo elettronico di stabilità	Electronic stability control	Contrôle electronique de stabilité	Elektronisches Stabilitätsprogramm	Sistema electrónico de estabilidad
Exc.	Escluso	Except	Sauf	Ausgenommen	Excepto
Fds	Fine serie	End of production	Fin de série	Endserie	Fin de producción
FR	Freno rinforzato	Reinforced brake	Frein renforcé	Verstärkte Bremse	Freno reforzado
Freno a mano	Freno a mano	Handbrake	Frein à main	Handbremse	Freno de mano
Front	Anteriore	Front	Avant	Vorn	Delantero
FWD	Trazione anteriore	Front wheel drive	Traction av.	Vorderradantrieb	Traccion delantera
h.	Altezza	Height	Hauteur	Hoch	Alteza
H-Back	2 Volumi	Hatchback	Hayon arrière	Hatchback	Con portón trasero
HDB	Freno per carico pesante	Heavy duty brake	Freins renforcés	Verstärkte Bremse	Frenos reforzados
Hole	Foro	Hole	Trou	Bohrungen	Agujero
HP	Cavalli vapore	HP (Horse power)	CV (Cheval-vapeur)	PS (Pferdestärke)	Caballos de vapor
Hybrid	Ibrido	Hybrid	Hybride	Hybrid	Híbrido
ie	Iniezione elettronica	Electronic injection	Injection électronique	Elektronische Injektion	Inyeccion electronica
Imp.	Impianto	Installation	Installation	Anlage	Equipo
Inch	Pollice	Inch	Pouce	Zoll	Pulgada
Incl.	Incluso	Included	Compris	Inklusiv	Incluido
IP	Sospensione rinforzata	Increased payload	Charge utile augmentée	Erhöhter Nutzlast	Suspensión reforzada
IW	Cerchi in ghisa	Iron rims	Jantes en fonte	Grauguß Felgen	Llantas de fundición
Jap	Japan	Japan	Japan	Japan	Japan
K.	Kompressor	Kompressor	Kompressor	Kompressor	Kompressor
Kg	Kilogrammo	Kilo	Kilogramme	Kilo	Kilo

	Abbreviazioni	**Abbreviations**	**Legendes**	**Zeichenerklärung**	**Abreviaturas**
kW	Kilowatt	Kilowatt	Kilowatt	Kilowatt	Kilovatio
LCS	Sistema controllo d'assetto	Level control system	Correcteur d'assiette	Niveau-Regulierung	Suspension auto regulable en altura
LCV	Veicoli Commerciali	Light commercial (LCV)	Utilitaires légers	Leichte Nutzfahrzeuge	Camionetas
LHD	Guida sinistra	Left hand drive	Conduite à gauche	Linkslenkung	Dirección a la izquierda
Luc	Lucas	Lucas	Lucas	Lucas	Lucas
M/T	Cambio manuale	Manual transmission	Boîte manuelle	Man. Schaltgetriebe	Cambio manual
Metano	Metano	Methane	Méthane	Methan	Metano
Mit	Mitsubishi	Mitsubishi	Mitsubishi	Mitsubishi	Mitsubishi
Mod.	Modello	Model	Modèle	Model	Modelo
MPB	Freno di stazionamento manuale	Manual parking brake	Frein d'arrêt manuelle	Man. Feststellbremse	Freno de detención manual
Passo	Passo	Thread	Filet	Gewinde	Rosca
Perr.	Perrot	Perrot	Perrot	Perrot	Perrot
Pla	Plastica	Plastic	Plastique	Plastik	Materia plástica
PS	Servosterzo	Power-steering	Direction assistée	Servolenkung	Servo direccion
Q	Quintale	Quintal	Quintal	Doppelzentner	Quintal
RC	Telaio rinforzato	Reinforced chassis	Châssis renforcé	Verstärkte Chassis	Chasis reforzado
Rear	Posteriore	Rear	Arrière	Hinten	Trasero
RHD	Guida destra	Right hand drive	Conduite à droite	Rechtslenkung	Dirección a la derecha
RWD	Trazione posteriore	Rear wheel drive	Traction ar.	Hinterradantrieb	Traccion trasera
SCS	Sistema di controllo della frenata	Brake control system	Systeme de contrôle freinage	Bremssystem-Kontrolle	Sistema de control de frenada
Servo	Servofreno	Brake servo	Servo-frein	Bremskraftverstärker	Servofreno
SRW	Ruote posteriori singole	Single rear Wheels	Roues arrière simples	Einzelbereifung (hinten)	Rueda trasera única
SW	Familiare	Station wagon	Break	Kombi	Familiar
t	Tonnellata	Ton	Tonne	Tonne	Tonelada
T.	Turbo	Turbo	Turbo	Turbo	Turbo
T.S.	Twin Spark	Twin Spark	Twin Spark	Twin Spark	Twin Spark
TC	Controllo della Trazione	Traction control system	Antipatinage	Traktions Kontrol	Sistema de control de tracción
TD	Turbodiesel	Turbodiesel	Turbodiesel	Turbodiesel	Turbodiesel
Ton	Tonnellata	Ton	Tonne	Tonne	Tonelada
Truck	Camion	Truck	Camion	Lastkraftwagen	Camión
TRW	Ruote posteriori gemellate	Twin rear wheels	Roues arrière jumelées	Doppelbereifung (hinten)	Rueda trasera doble
Van	Furgone	Van	Fourgon	Lieferwagen	Furgonetta
VDC	Controllo dinamico del veicolo	Vehicle Dynamic Control	Contrôle dynamique du vehicule	Dynamische FahrzeugKontrolle	Control dinámico del vehiculo
Vent.	Disco Ventilato	Ventilated Disc	Disques Ventilés	Belüftete Scheiben	Discos ventilados
-Vett.	Fino a produz. N.	To production No.	Jusqu'à production N.	Bis Produktion Nr.	Hasta produccion N.
Vett.-	Da produz. N.	From production No.	Depuis production N.	Ab Produktion Nr.	Del produccion N.
Wheel	Ruota	Wheel	Roue	Rad	Rueda

fri.tech.

LISTA NUOVI RIFERIMENTI - NEW REFERENCES LIST - LISTE NOUVELLES REFERENCES
LISTE NEUE SACHNUMMER - LISTA NUEVAS REFERENCIAS

CILINDRETTO FRENO WHEEL CYLINDER		CF1025	Subaru / Toyota
CF927	Buick / Chevrolet Usa / Oldsmobile / Pontiac	**CF976**	Daihatsu
CF928	Buick / Chevrolet Usa / Gmc Truck / Oldsmobile / Pontiac	**CF977**	Land Rover
CF929	Chrysler Usa / Dodge / Plymouth	**CF978**	Land Rover
CF930	Buick / Cadillac / Chevrolet Usa / Oldsmobile / Pontiac	**CF979**	Suzuki
CF931	Buick / Cadillac / Chevrolet Usa / Gmc Truck / Jeep Usa / Oldsmobile / Pontiac	**CF980**	Daihatsu
CF932	Buick / Cadillac / Chevrolet Usa / Gmc Truck / Jeep Usa / Oldsmobile / Pontiac	**CF981**	Mazda
CF933	Buick / Cadillac / Chevrolet Usa / Oldsmobile / Pontiac	**CF982**	Kia
CF934	Chevrolet Usa / Gmc Truck / Oldsmobile / Pontiac	**CF983**	Hyundai
CF935	Chevrolet Usa / Gmc Truck	**CF984**	Hyundai
CF936	Lincoln	**CF985**	Daihatsu
CF937	Buick / Cadillac / Chevrolet Usa / Oldsmobile / Pontiac	**CF986**	Hyundai
CF938	Chevrolet Usa / Pontiac	**CF987**	Daihatsu
CF939	Chevrolet Usa	**CF988**	Daihatsu
CF940	Buick / Cadillac / Chevrolet Usa / Oldsmobile / Pontiac	**CF989**	Mitsubishi
CF941	Chevrolet Usa / Gmc Truck	**CF990**	Suzuki
CF942	Chevrolet Usa / Gmc Truck	**CF991**	Suzuki
CF944	Buick / Cadillac / Chevrolet Usa / Oldsmobile / Pontiac	**CF992**	Toyota Lcv
CF945	Buick / Chevrolet Usa / Oldsmobile / Pontiac	**CF993**	Nissan Lcv
CF946	Buick / Gmc Truck / Oldsmobile	**CF994**	Chrysler / Dodge / Jeep
CF947	Chevrolet Usa / Gmc Truck	**CF995**	Nissan / Nissan Lcv
CF948	Chevrolet Usa	**CF996**	Toyota Lcv
CF949	Dodge Truck / Ford Usa / Ford Usa Truck / Ihc Truck / Mercury / Plymouth	**CF997**	Ford Europe / Mazda / Mazda Lcv
CF950	Dodge Truck / Ford Usa / Ford Usa Truck / Ihc Truck / Mercury / Plymouth	**CF998**	Subaru
CF951	Buick / Chevrolet Usa / Oldsmobile / Pontiac	**CF999**	Kia
CF952	Buick / Chevrolet Usa / Oldsmobile / Pontiac	**CF1000**	Kia
CF953	Cadillac / Chevrolet Usa / Oldsmobile	**CF1001**	Toyota
CF954	Cadillac / Dodge Truck / Gmc Truck	**CF1002**	Volkswagen
CF955	Chevrolet Usa / Oldsmobile / Pontiac	**CF1003**	Chevrolet
CF956	Jeep / Jeep Usa	**CF1004**	Hyundai Lcv
CF957	Buick / Cadillac / Chevrolet Usa / Oldsmobile / Pontiac	**CF1005**	Kia Lcv
CF958	Ford Usa / Mercury / Nissan Usa Truck	**CF1006**	Kia Lcv
CF959	Cadillac / Cadillac Truck / Chevrolet Usa / Gmc Truck	**CF1007**	Kia Lcv
CF960	Chevrolet Usa / Gmc Truck	**CF1008**	Kia Lcv
CF961	Chevrolet Usa / Gmc Truck	**CF1009**	Subaru
CF962	Ford Usa Truck / Mazda	**CF1010**	Ford Europe
CF963	Chevrolet Usa	**CF1011**	Mazda
CF964	Goggomobil	**CF1012**	Seat / Skoda
CF965	Nissan / Nissan Lcv	**CF1013**	Nissan
CF966	Toyota	**CF1014**	Ford Europe
CF967	Cesab (Carelli Elevatori)	**CF1015**	Ford Lcv
CF968	Daihatsu	**CF1016**	Kia
CF969	Kia	**CF1017**	Kia
CF970	Nissan	**CF1018**	Citroën / Peugeot / Toyota
CF971	Daihatsu	**CF1019**	Fiat
CF972	Suzuki Lcv	**CF1020**	Renault
CF973	Suzuki Lcv	**CF1021**	Renault
CF974	Mitsubishi	**CF1022**	Renault / Smart
CF975	Mitsubishi	**CF1023**	Renault / Smart

fri.tech.

LISTA NUOVI RIFERIMENTI - NEW REFERENCES LIST - LISTE NOUVELLES REFERENCES LISTE NEUE SACHNUMMER - LISTA NUEVAS REFERENCIAS			
CF1024	Daihatsu	**PF226**	Renault
POMPE FRENO BRAKE MASTER CYLINDER		**PF256**	Honda
PF040	Volkswagen Lcv	**PF292**	Peugeot
PF045	Fiat / Fso / Zastava	**PF293**	Audi / Volkswagen
PF047	Fiat / Lancia / Seat	**PF294**	Fiat
PF048	Fiat	**PF295**	Renault
PF050	Autobianchi / Fiat / Fiat Lcv / Zastava	**PF380**	Opel / Suzuki
PF054	Renault / Renault Lcv	**PF385**	Citroën / Citroën Lcv / Peugeot / Peugeot Lcv
PF055	Renault / Renault Lcv	**PF401**	Renault
PF056	Citroën / Citroën Lcv	**PF405**	Renault Lcv
PF057	Citroën / Citroën Lcv	**PF426**	Renault Lcv
PF060	Audi / Volkswagen	**PF429**	Citroën / Citroën Lcv / Fiat / Fiat Lcv / Lancia / Peugeot / Peugeot Lcv
PF061	Saab	**PF444**	Daewoo
PF062	Saab	**PF449**	Daewoo
PF063	Volvo	**PF462**	Citroën Lcv / Peugeot / Peugeot Lcv
PF066	Seat	**PF474**	Fiat
PF068	Fiat / Seat	**PF475**	Rover
PF070	Seat	**PF504**	Renault Lcv
PF071	Volvo	**PF795**	Alfa Romeo / Fiat / Lancia
PF072	Fiat	**PF796**	Suzuki / Toyota
PF073	Fiat / Fso / Lada	**PF797**	Toyota
PF075	Fiat / Fiat Lcv	**PF798**	Citroën / Citroën Lcv / Peugeot / Peugeot Lcv
PF077	Renault / Renault Lcv	**PF799**	Audi / Seat / Skoda / Volkswagen
PF078	Renault / Renault Lcv	**PF800**	Opel / Opel Lcv
PF080	Citroën / Peugeot	**PF801**	Mazda
PF082	Peugeot / Talbot	**PF802**	Bmw
PF083	Citroën / Citroën Lcv	**PF803**	Mercedes Benz / Mercedes Benz Lcv
PF084	Peugeot	**PF804**	Bmw
PF090	Jaguar	**PF806**	Nissan Lcv / Opel Lcv / Renault Lcv
PF092	Zastava	**PF809**	Chrysler
PF093	Renault / Renault Lcv	**PF810**	Jeep
PF097	Ford Lcv	**PF811**	Chrysler
PF098	Ford Europe	**PF812**	Nissan / Renault
PF100	Iveco Truck	**PF813**	Kia
PF101	Iveco Truck	**PF814**	Toyota
PF103	Iveco Truck	**PF815**	Toyota
PF104	Ford Europe	**PF816**	Toyota
PF105	Ford Europe	**PF817**	Toyota
PF109	Opel	**PF818**	Audi / Seat / Skoda / Volkswagen
PF120	Ford Lcv	**PF819**	Volkswagen Lcv
PF121	Ford Europe / Ford Lcv	**PF820**	Volkswagen Lcv
PF122	Renault	**PF821**	Volkswagen Lcv
PF123	Bmw	**PF822**	Ford Europe / Seat / Volkswagen
PF125	Iveco Truck	**PF823**	Seat
PF137	Iveco Truck	**PF824**	Seat
PF138	Alfa Romeo	**PF825**	Volkswagen
PF139	Peugeot	**PF826**	Audi / Seat / Skoda / Volkswagen
PF141	Lancia	**PF827**	Audi
PF142	Audi	**PF828**	Mercedes Benz
PF145	Ford Europe / Ford Lcv	**PF829**	Mercedes Benz
PF147	Ford Europe / Ford Lcv	**PF830**	Mercedes Benz
PF150	Ford Lcv	**PF831**	Mercedes Benz
PF162	Opel / Opel Lcv	**PF832**	Mercedes Benz
PF165	Opel	**PF833**	Mercedes Benz
PF166	Opel	**PF834**	Mercedes Benz
PF167	Opel / Opel Lcv	**PF835**	Nissan
PF175	Renault	**PF836**	Hyundai
PF176	Renault	**PF837**	Mercedes Benz
PF178	Audi / Volkswagen	**PF838**	Mercedes Benz
PF181	Honda	**PF839**	Fiat

fri.tech.

LISTA NUOVI RIFERIMENTI - NEW REFERENCES LIST - LISTE NOUVELLES REFERENCES LISTE NEUE SACHNUMMER - LISTA NUEVAS REFERENCIAS			
PF840	Fiat	**PF918**	Citroën / Peugeot
PF841	Fiat / Fiat Lcv	**PF919**	Citroën / Peugeot
PF842	Fiat / Fiat Lcv	**PF920**	Kia
PF843	Fiat / Fiat Lcv	**PF921**	Kia
PF844	Fiat / Fiat Lcv	**PF922**	Kia
PF845	Fiat / Lancia	**PF923**	Hyundai
PF846	Fiat / Fiat Lcv	**PF924**	Nissan
PF847	Fiat / Fiat Lcv / Lancia	**PF925**	Nissan / Renault
PF848	Fiat / Suzuki	**PF926**	Nissan / Renault
PF849	Fiat / Suzuki	**PF927**	Chrysler
PF850	Renault	**PF928**	Chrysler
PF851	Suzuki	**PF929**	Kia
PF853	Citroën / Peugeot / Toyota	**PF930**	Mazda
PF854	Citroën / Peugeot	**PF931**	Ford Europe
PF855	Citroën / Peugeot	**PF932**	Ford Europe / Mazda
PF856	Hyundai	**PF933**	Ford Europe / Mazda
PF857	Opel	**PF934**	Alfa Romeo
PF858	Abarth / Alfa Romeo / Fiat / Fiat Lcv / Opel	**PF935**	Suzuki
PF860	Toyota	**PF936**	Toyota
PF861	Opel	**PF937**	Fiat
PF862	Opel	**PF938**	Daihatsu
PF865	Opel / Opel Lcv	**PF939**	Dodge / Jeep
PF866	Opel / Opel Lcv	**PF940**	Dodge / Jeep
PF867	Ford Europe	**PF941**	Chevrolet / Opel
PF869	Audi / Seat / Skoda / Volkswagen / Volkswagen Lcv	**PF942**	Honda
PF870	Audi / Skoda / Volkswagen	**PF943**	Honda
PF871	Chevrolet / Daewoo	**PF944**	Honda
PF873	Citroën / Peugeot / Peugeot Lcv	**PF945**	Hyundai
PF874	Citroën Lcv / Fiat Lcv / Peugeot Lcv	**PF946**	Hyundai
PF875	Citroën Lcv / Fiat Lcv / Peugeot Lcv	**PF947**	Hyundai / Kia
PF876	Citroën Lcv / Fiat Lcv / Peugeot Lcv	**PF948**	Hyundai
PF877	Citroën Lcv / Fiat Lcv / Peugeot Lcv	**PF949**	Hyundai / Kia
PF878	Citroën Lcv / Fiat Lcv / Peugeot Lcv / Toyota Lcv	**PF950**	Hyundai
PF879	Audi	**PF951**	Hyundai
PF880	Mazda	**PF952**	Kia
PF884	Citroën / Citroën Lcv / Peugeot Lcv	**PF953**	Hyundai / Kia
PF886	Opel / Suzuki	**PF954**	Mazda
PF887	Volkswagen	**PF955**	Mitsubishi
PF890	Bmw	**PF956**	Nissan
PF892	Mini	**PF957**	Toyota
PF895	Nissan	**PF958**	Lexus
PF896	Smart	**PF959**	Toyota
PF897	Mercedes Benz Lcv / Volkswagen Lcv	**PF960**	Volkswagen
PF898	Ford Lcv	**PF961**	Volkswagen
PF899	Dacia / Renault	**PF962**	Toyota
PF901	Opel / Suzuki	**PF963**	Daihatsu
PF902	Honda	**PF964**	Suzuki
PF904	Hyundai	**PF965**	Lancia
PF905	Toyota	**PF966**	Toyota
PF906	Bmw	**PF967**	Toyota
PF907	Volkswagen Lcv	**PF968**	Toyota
PF908	Renault	**PF969**	Toyota
PF909	Audi	**PF970**	Toyota
PF910	Skoda	**PF971**	Dacia / Renault
PF911	Porsche	**PF972**	Dacia / Dacia Lcv
PF912	Fiat / Fiat Lcv / Opel / Opel Lcv	**PF973**	Seat / Skoda / Skoda Lcv / Volkswagen
PF913	Fiat / Fiat Lcv / Opel / Opel Lcv	**PF974**	Nissan
PF914	Fiat / Fiat Lcv	**PF975**	Bmw
PF915	Citroën	**PF976**	Bmw
PF916	Citroën / Peugeot	**PF977**	Toyota
PF917	Citroën / Peugeot	**PF978**	Nissan Lcv / Opel Lcv / Renault Lcv

LISTA NUOVI RIFERIMENTI - NEW REFERENCES LIST - LISTE NOUVELLES REFERENCES LISTE NEUE SACHNUMMER - LISTA NUEVAS REFERENCIAS			
PF979	Nissan Lcv / Opel Lcv / Renault Lcv	**CZ133**	Toyota
PF980	Nissan Lcv / Opel Lcv / Renault Lcv	**POMPE FRIZIONE CLUTCH MASTER CYLINDERS**	
PF981	Jeep	**PZ011**	Iveco Truck
PF982	Mercedes Benz Lcv / Volkswagen Lcv	**PZ021**	Iveco Truck
PF983	Ford Europe	**PZ026**	Iveco Bus
PF984	Iveco Truck	**PZ028**	Iveco Truck
PF985	Iveco Truck	**PZ111**	Fiat / Fiat Lcv / Fso / Iveco Truck / Zastava
PF986	Iveco Truck	**PZ112**	Lada
PF987	Renault	**PZ113**	Mercedes Benz
PF988	Ford Lcv	**PZ114**	Citroën
PF989	Peugeot	**PZ115**	Citroën / Citroën Lcv / Peugeot
PF990	Renault	**PZ116**	Citroën / Peugeot
PF991	Bmw	**PZ117**	Opel / Opel Lcv
PF992	Bmw	**PZ118**	Ford Europe / Mazda
CORRETTORI FRENATA BRAKE REGULATING VALVES		**PZ119**	Ford Europe / Ford Lcv
CT002	Seat	**PZ120**	Iveco Truck
CT005	Fiat / Seat	**PZ130**	Citroën / Citroën Lcv / Fiat / Fiat Lcv / Lancia / Peugeot / Peugeot Lcv
CT007	Seat	**PZ144**	Fiat Lcv
CT009	Renault / Renault Lcv	**PZ145**	Fiat / Suzuki
CILINDRI FRIZIONE SLAVE CYLINDERS		**PZ146**	Abarth / Alfa Romeo / Citroën Lcv / Fiat / Fiat Lcv / Opel / Opel Lcv / Peugeot Lcv
CZ002	Iveco Bus / Iveco Truck	**PZ147**	Iveco Truck
CZ015	Iveco Truck	**PZ148**	Seat / Volkswagen
CZ072	Fiat / Fiat Lcv	**PZ149**	Volkswagen Lcv
CZ094	Iveco Truck	**PZ150**	Volkswagen
CZ100	Iveco Truck	**PZ151**	Toyota
CZ101	Fiat / Fiat Lcv / Fso / Iveco Bus / Iveco Truck / Zastava	**PZ152**	Honda
CZ102	Lada	**PZ153**	Hyundai
CZ103	Citroën / Citroën Lcv / Fiat / Lancia / Peugeot / Suzuki	**PZ154**	Honda
CZ104	Citroën / Citroën Lcv / Peugeot / Peugeot Lcv	**PZ155**	Citroën Lcv / Peugeot Lcv
CZ112	Mercedes Benz / Mercedes Benz Lcv		
CZ113	Honda		
CZ114	Honda		
CZ115	Honda		
CZ116	Fiat Lcv		
CZ117	Skoda		
CZ118	Bmw		
CZ119	Land Rover		
CZ120	Volkswagen Lcv		
CZ121	Jeep		
CZ122	Hyundai		
CZ123	Audi		
CZ124	Nissan		
CZ125	Hyundai / Mitsubishi		
CZ126	Toyota / Toyota Lcv		
CZ127	Toyota		
CZ128	Mazda		
CZ129	Ford Europe / Mazda Lcv		
CZ130	Hyundai / Kia		
CZ131	Hyundai		
CZ132	Hyundai		

fri.tech.

CODICI ANNULLATI - CANCELLED PART NUMBERS - RÉFÉRENCES ANNULÉS STORNIERTE SACHNUMMERN - CÓDIGOS ANULADOS								
CF276	CF663	CT021	PF066	PF122	PF325	PF386	PF433	PF496
CF368	CF665	CZ029	PF067	PF123	PF328	PF387	PF439	PF497
CF384	CF666	CZ037	PF068	PF125	PF331	PF388	PF444	PF498
CF393	CF668	CZ040	PF069	PF129	PF333	PF399	PF446	PF504
CF474	CF671	CZ045	PF070	PF137	PF335	PF400	PF449	PF554
CF504	CF675	CZ046	PF071	PF138	PF337	PF401	PF450	PF562
CF575	CF680	CZ050	PF072	PF139	PF342	PF403	PF451	PF572
CF596	CF681	CZ054	PF073	PF141	PF343	PF404	PF453	PF607
CF597	CF687	CZ055	PF075	PF142	PF344	PF405	PF454	PF649
CF605	CF688	CZ059	PF077	PF145	PF345	PF407	PF456	PF662
CF637	CF689	CZ060	PF078	PF147	PF347	PF408	PF457	PF663
CF639	CF690	CZ061	PF080	PF150	PF348	PF409	PF460	PZ003
CF640	CF691	CZ062	PF082	PF162	PF349	PF410	PF461	PZ012
CF641	CF692	CZ066	PF083	PF165	PF351	PF411	PF462	PZ017
CF642	CF693	CZ079	PF084	PF166	PF355	PF413	PF466	PZ031
CF643	CF698	CZ087	PF088	PF167	PF356	PF414	PF468	PZ040
CF649	CF699	CZ090	PF090	PF175	PF358	PF415	PF470	PZ041
CF650	CF700	PF045	PF092	PF176	PF361	PF416	PF471	PZ042
CF651	CF703	PF047	PF093	PF178	PF364	PF417	PF472	PZ044
CF652	CF704	PF048	PF097	PF181	PF365	PF418	PF474	PZ047
CF653	CF729	PF050	PF098	PF183	PF368	PF419	PF475	PZ053
CF654	CF731	PF054	PF100	PF226	PF369	PF420	PF476	PZ055
CF655	CF733	PF055	PF101	PF256	PF370	PF421	PF477	PZ056
CF656	CF738	PF056	PF103	PF292	PF371	PF422	PF478	PZ057
CF657	CF739	PF057	PF104	PF293	PF375	PF424	PF483	PZ058
CF658	CF741	PF060	PF105	PF294	PF376	PF426	PF484	PZ069
CF659	CF752	PF061	PF109	PF295	PF379	PF429	PF485	PZ074
CF660	CF799	PF062	PF113	PF314	PF380	PF430	PF486	
CF661	CT017	PF063	PF120	PF315	PF384	PF431	PF488	
CF662	CT018	PF065	PF121	PF316	PF385	PF432	PF491	

CODICI AD ESAURIMENTO - DISCONTINUING PART NUMBERS - RÉFÉRENCES EN ÉPUISEMENT - AUSLAUF SACHNUMMERN - CÓDIGOS EN AGOTAMIENTO								
CF119	CF639	CF693	CZ033	CZ078	PF324	PF389	PF565	PZ049
CF254	CF640	CF697	CZ034	CZ079	PF332	PF391	PF566	PZ051
CF260	CF641	CF702	CZ038	CZ082	PF334	PF392	PF567	PZ052
CF276	CF642	CF703	CZ039	CZ084	PF336	PF395	PF568	PZ054
CF353	CF645	CF704	CZ041	CZ087	PF338	PF396	PF569	PZ059
CF368	CF649	CF729	CZ042	CZ089	PF340	PF402	PF570	PZ063
CF384	CF659	CF738	CZ043	CZ091	PF341	PF406	PF612	PZ069
CF393	CF663	CF739	CZ044	CZ092	PF346	PF423	PF616	PZ083
CF405	CF664	CF799	CZ047	PF106	PF350	PF425	PF618	PZ084
CF421	CF667	CF842	CZ049	PF296	PF352	PF427	PF619	PZ086
CF474	CF668	CF844	CZ056	PF297	PF353	PF428	PF648	PZ088
CF480	CF669	CT014	CZ057	PF298	PF354	PF435	PF651	PZ089
CF575	CF672	CT015	CZ058	PF299	PF357	PF440	PF664	
CF596	CF673	CT019	CZ060	PF300	PF362	PF441	PF665	
CF597	CF674	CT020	CZ063	PF301	PF363	PF445	PZ035	
CF605	CF675	CZ003	CZ064	PF302	PF367	PF459	PZ036	
CF624	CF681	CZ022	CZ065	PF303	PF372	PF501	PZ043	
CF625	CF685	CZ028	CZ068	PF306	PF373	PF555	PZ045	
CF637	CF686	CZ031	CZ069	PF317	PF377	PF559	PZ046	
CF638	CF691	CZ032	CZ076	PF319	PF378	PF561	PZ048	

fri.tech.

MAKE - MODEL	PAGE
ABARTH	
500 II, C (150, 312) 7/07-	1
595, Cabrio 9/12-	1
Grande Punto IV (199) 9/05-1/12	1
Punto Evo (199) 10/09-12/12	1
ALFA ROMEO	
145, 146 (930) 7/94-1/01	1
147 (937) 1/01-1/10	1
155 (167) 1/92-1/98	2
156 (932), Sportwagon 9/97-9/05	3
159, Sportwagon (140) 9/05-11/11	4
164 (164/168) 6/87-9/98	4
166 (936) 9/98-12/07	5
1750-2000 3/68-12/83	5
33 I (905,A), Sportwagon 5/83-12/89	5
33 II (907A,B), Sportwagon 1/90-9/94	7
75 (162B) 1/85-9/92	7
90 (162) 10/84-7/87	8
Alfasud (901) 6/72-12/84	8
Alfasud Sprint (902.A) 9/76-12/89	8
Alfetta (116) 1/74-1/86	9
Arna (920) 3/83-12/86	9
Brera (177) 1/06-10/10	9
Giulia 6/64-12/78	10
Giulietta II (116) 10/77-12/85	10
Giulietta III (940) 5/10-	10
GT (937) 11/03-12/10	10
GTV (116) 1/78-2/87	10
GTV (916C) 6/95-12/05	11
Mito (955) 8/08-	11
Montreal 12/72-3/79	11
RZ 1/92-12/94	11
Spider (916S) 6/95-6/06	12
Spider (939) 1/06-12/10	12
ALFA ROMEO LCV	
AR 6 (280) 1/82-8/90	12
AR 8 (280) 4/78-12/89	12
AR 8 (280) Van 4/78-12/89	12
AMERICAN MOTORS	
Ambassador	13
American	13
Amx	13
Classic	13
Concord	13
Eagle - Sx4	13
Gremlin	13
Hornet	13
Javelin	13
Kammback	13
Marlin	13
Matador	13
Pacer	13
Rambler	13
Rebel	14
Rogue	14
Spirit	14
AUDI	
100 I (C1) 11/68-7/76	14
100 II (43, C2), Avant 6/76-7/83	14
100 III (44, 44Q, C3), Avant 8/82-7/91	14
100 IV (4A, C4), Avant 12/90-6/94	15
200 II (44, 44Q), Avant 8/83-12/91	16
4000 10/78-9/87	16
50 (86) 8/74-7/78	16
5000 10/78-9/87	16
60, Variant 10/68-9/73	16
75, Variant 9/68-9/73	16
80 I (80, 82, B1) 5/72-8/78	16
80 II (81, 85, B2) 8/78-12/86	17
80 III (89, 89Q, 8A, B3) 8/86-7/92	20
80 IV (8C, B4), Avant 9/91-1/96	20
90 I (81, 85, B2) 10/84-3/87	21
90 II (89, 89Q, 8A, B3) 4/87-9/91	21
A1 I (8X1, 2, A), Sportback 5/10-10/14	22
A1 II, Sportback 11/14-	22
A2 (8Z0) 2/00-8/05	22
A3 I (8L1) 9/96-4/03	22
A3 II (8P1), Sportback 5/03-8/12	23
A3 II Cabrio 4/08-5/13	25
A3 III (8V1),Sportback(8VA),Sedan(8VS),Cabrio(8V7) 4/12-	25
A4 I (8D2, B5), Avant 1/95-9/01	25
A4 II (8E2, B6), Avant 11/00-10/04	31
A4 II Cabrio (8H7) 4/02-3/09	32
A4 III (8EC), Avant 11/04-10/07	33
A4 IV (8K2, K5), Avant 11/07-9/15	34
A4 IV (8KH) Allroad 5/09-9/15	35
A5 (8T3), Sportback (8TA), Cabrio (8F7) 5/07-	35
A6 I (4A, C4), Avant 6/94-2/97	35
A6 II (4B, C5), Avant 1/97-2/05	36
A6 II Allroad (4BH, C5) 5/00-7/06	41
A6 III (4F2), Avant 5/04-3/11	41
A6 III Allroad (4FH) 8/06-1/11	41
A6 IV (4G2, 5), Avant 2/11-	42
A6 IV Allroad 4/12-	42
A8 I (4D2, 4D8) 3/94-9/02	42
Cabrio (8G7, B4) 5/91-8/00	43
Coupe I (81, 85) 7/80-10/88	43
Coupe II (89, 8B) 10/88-12/96	44
Fox 1/75-1/79	44
Q5 (8R) 11/08-	44
Quattro (85) 7/80-7/91	45
TT I (8N3,9), Roadster 10/98-8/06	45
TT II (8J3,9), Roadster 9/06-8/14	46
V8 (D1) 10/88-2/94	46
AUTOBIANCHI	
A111 8/69-11/72	46
A112 10/69-12/85	46
Giardinetta	46
Y10 3/85-10/95	46
Y10 (RES. 1992) 6/92-10/95	47
BEDFORD	
Brava	47
CF Van	47
CF2 Van	47
Chevanne 1/76-12/82	47
Commer/Dodge	47
Dennis	47
HA Van	47
Midi	48
Midi Van 1/87-12/92	48
Pick-Up	48
Rascal 7/86-6/90	48
BMW	
02 (E10) 9/67-7/77	48
1 (E81,87) 9/04-9/12	48
1 (E82) Coupe 9/07-12/13	49
1 (E88) Cabrio 11/07-12/13	49
1 II (F20, F21) 8/11-	49
2 I (F22) Coupe 1/14-	50
2 I (F23) Cabrio 11/14-	50
2000 3.2 Coupe (E9) 10/65-3/76	50
3 I (E21) 6/75-3/84	50
3 II (E30) 9/82-10/93	51
3 II Touring (E30) 7/87-6/94	52
3 III (E36) 9/90-2/98	52
3 III Cabrio, Coupe (E36) 3/92-4/99	54
3 III Compact (E36) 3/94-8/00	55
3 III Touring (E36) 1/95-10/99	55
3 IV (E46) 2/98-12/04	56
3 IV Cabrio, Coupe (E46) 4/99-2/07	57
3 IV Compact (E46) 6/01-12/04	58
3 IV Touring (E46) 10/99-12/04	58
3 V (E90) 1/05-11/11	59
3 V Cabrio (E93) 3/07-11/11	61
3 V Coupe (E92) 9/06-11/11	61
3 V Touring (E91) 1/05-6/12	62
3 VI (F30, F35) 12/11-	64
3 VI Touring (F31) 7/12-	64
4 I (F32, F33) Coupe, Cabrio 10/13-	64
4 I GC (F36) 3/14-	65
5 I (E12) 8/72-8/81	65
5 II (E28) 6/81-6/90	65
5 III (E34) 1/88-9/95	66
5 III Touring (E34) 11/91-1/97	66
5 IV (E39) 11/95-7/03	67
5 IV Touring (E39) 11/95-7/03	68
5 V (E60) 7/03-3/10	70
5 V Touring (E61) 7/03-7/09	70
5 VI (F07) GT 8/09-	71
5 VI (F10, F18) 2/10-	71
5 VI Touring (F11) 6/10-	72
6 I (E24) 4/76-9/90	73
6 II (E63, E64), Cabrio 1/04-1/11	73
6 III (F12,F13,F06) Cabrio, Coupe, GC 2/11-	73
7 I (E23) 5/77-8/86	73
7 II (E32) 9/86-9/94	73
7 III (E38) 10/94-11/01	73
7 IV (E65, E66) 11/01-12/08	74
7 V (F01, F02, F03, F04) 10/08-8/15	74
M5 10/84-12/87	74
X1 I (E84) 9/09-8/15	74
X3 I (E83) 1/04-9/10	75
X3 II (F25) 10/10-	76
X5 I (E53) 5/00-12/06	76
Z1 6/88-6/91	76
Z3 (E36) 10/95-1/03	76
Z4 I (E85, 86) 2/03-2/09	77
Z4 II (E89) 3/09-	77
Z8 (E36) 6/00-6/03	78
BUICK	
Buick	78
Century	78
Electra	78
Estate Wagon	78
Gransport	78
Le Sabre	78
Park Avenue 1/91-10/96	78
Regal	78
Riviera 1/97-12/99	78
Saturn L	78

MAKE - MODEL	PAGE
Skyhawk I	78
Skyhawk II	78
Skyhawk III	78
Skylark	78
Somerset I	78
Somerset II	79
Special	79
CADILLAC	
Calais	79
Cimarron I	79
Cimarron II	79
Commercial Chassis	79
Deville - Concours	79
Eldorado	79
Fleetwood	79
Seville	79
CADILLAC TRUCK	
Escalade	79
CESAB (CARELLI ELEVATORI)	
KD 20, 25	79
CHEVROLET	
Aveo I 5/05-4/08	79
Aveo II (T200, 250) 1/06-2/11	79
Aveo III (T300) 3/11-	79
Cruze,SW (J300/305/308) 5/09-	80
Joy 3/05-	80
Kalos 3/05-	80
Lacetti, SW (J200) 3/05-12/09	80
Matiz 3/05-	80
Nubira, SW 3/05-12/09	80
Orlando 6/11-	80
Rezzo 3/05-	80
Spark I 3/05-2/10	80
Spark II 3/10-	80
Tacuma/ Vivant 1/05-12/09	81
CHEVROLET USA	
Astro Mini Van	81
Astro Van	81
Bel Air - Biscayne - Caprice - Impala	81
Beretta	81
Berlinetta	81
Blazer C, K, V	81
Blazer S10	81
Blazer T10	81
Cadett	81
Camaro	81
Caprice	81
Cavalier I	81
Cavalier II	81
Cavalier III	81
Celebrity	81
Chevelle	81
Chevette	82
Chevrolet	82
Citation	82
Corsica I	82
Corsica II	82
Corsica III	82
Councours	82
El Camino	82
Iroc - Z28	82
Jimmy	82
Jimmy S15	82
Jimmy T15	82
K10, 15 Pick-Up	82
LLV Postal Vehicle	82
Lumina	82
Lumina Van	82
Malibu 8/96-9/05	82
Monte Carlo	82
Nova	82
Nova S	82
Nova X	83
Pick-Up	83
Range 10	83
Range 20	83
Range 30	83
San Remo	83
Sonoma	83
Sprint	83
Tahoe I 1/95-12/01	83
Traker	83
CHRYSLER	
Grand Voyager II 1/96-4/08	83
Sebring III (JS) 7/07-12/10	83
Stratus (JA) 12/95-4/01	83
Voyager I (AS) 8/84-9/90	83
Voyager II (ES) 8/90-9/95	83
Voyager III (GS) 1/95-3/01	83
Voyager IV (RG) 2/00-12/07	84
Ypsilon 5/11-	84
CHRYSLER USA	
Laser	84
Le Baron	84
Le Baron GTS	84
New Yorker	84
New Yorker Landau	84
Sebring	84
Town & Country I 1/90-12/95	84
Voyager	84
CITROËN	
2 CV 3/63-	84
Ami 1/63-12/77	84
Ax (ZA) 7/84-12/98	85
Berlingo I (MF) 7/96-5/08	86
Berlingo II (B9) 6/08-	87
C1 I (PM, PN) 6/05-5/14	87
C1 II, Airscape 6/14-	87
C2 (JM) 9/03-12/10	87
C3 I (FC) 2/02-10/09	88
C3 I Pluriel (HB) 5/03-10/09	89
C3 II (SC) 11/09-	90
C3 Picasso 2/09-	90
C4 Cactus 7/14-	91
C4 I, Coupe (LC, LA) 11/04-10/10	91
C4 II (B71) 11/10-	91
C5 I, Break (DC, DE) 3/01-9/04	92
C5 II, Break (RC, RE) 9/04-3/08	92
C8 (EA, EB) 7/02-12/14	92
C-Elysee 11/12-	92
C-Zero 10/10-	92
DS3 11/09-	92
DS4 4/11-	93
Dyane 8/67-10/84	93
Evasion (22,U6) 6/94-7/02	93
LN 9/76-7/79	94
LNA 11/76-10/86	94
Mehari 5/68-10/87	94
Saxo (S0,S1) 5/96-4/04	94
Visa 9/78-3/91	95
Xsara (N1/0), Coupe 4/97-5/05	96
Xsara (N2) Break 4/97-8/05	98
Xsara Picasso (N68) 2/00-12/12	99
ZX (N2) 3/91-6/97	100
ZX (N2) Break 3/91-6/97	101
CITROËN LCV	
2 CV Fourgonette 7/64-	102
Berlingo I Van (M) 7/96-5/08	102
C15 (VD), Van 10/84-12/05	103
C2 Van (JM) 9/03-12/10	103
C25 (280, 290) 9/81-2/94	103
C3 I Van 2/03-10/09	104
C4 Van 1/04-10/10	105
Dispatch 1/94-12/00	105
Jumper I (230)/ Relay 3/94-4/02	105
Jumper II (244)/ Relay 4/02-3/06	106
Jumper III 4/06-11/14	107
Jumpy I (U6U) 10/95-12/06	107
Jumpy II/Dispatch 1/07-	108
Nemo (AA) 2/08-	108
Saxo Van 1/96-	108
Synergie 1/94-7/02	108
DACIA	
Dokker 1/13-	108
Duster II 6/10-	109
Lodgy, Stepway 3/12-	109
Logan I, MCV 9/04-12/12	109
Logan II, MCV 10/12-	110
Sandero I, Stepway 6/08-12/12	110
Sandero II 1/13-	110
DACIA LCV	
Logan Van, Pick-up 10/09-12/12	111
DAEWOO	
Cielo 2/95-	111
Espero (KLEJ) 10/91-9/99	111
Kalos (KLAS) 9/02-	111
Korando, Cabrio (KJ) 1/99-	111
Lacetti (KLAN) 2/04-12/06	111
Lanos (KLAT) 5/97-1/03	111
Matiz (KLYA) 9/98-1/05	112
Musso (FJ) 1/99-	112
Nexia (KLETN) 2/95-8/97	112
Nubira (KLAJ), SW 5/97-7/03	112
Nubira (KLAN) 7/03-12/04	112
Rexton 4/02-	112
Rezzo 1/00-12/04	112
Tacuma (KLAU) 9/00-12/04	112
Tico II (KLY3) 2/95-12/00	112
DAEWOO LCV	
Matiz Van 1/98-12/05	112

MAKE - MODEL	PAGE

DAF TRUCK

33 7/67-9/74 ... 113
66 10/72-9/75 ... 113
Pilot ... 113
Serie 200 (20 Q - 25,5 Q) ... 113
Serie 400 Van 4/89-8/93 ... 113

DAIHATSU

Charade III (G100, G101, G102) 3/87-1/93 113
Charade IV (G200, G202) 1/93-4/01 ... 113
Charade VI 7/11-12/13 ... 113
Charmant (A) 11/81-7/87 ... 113
Copen 9/03-12/11 ... 113
Cuore IV (L501) 1/95-12/99 ... 113
Cuore V (L5) 11/96-10/98 ... 113
Cuore VI (L7) 10/98-5/03 ... 113
Cuore VII 5/03-9/07 ... 113
Cuore VIII 10/07- ... 113
Gran Move (G3) 10/96-7/02 ... 113
Materia 1/07- ... 114
Move (L6, L9) 10/96- ... 114
Sirion (M1) 4/98-1/05 ... 114
Sirion (M3) 1/05- ... 114
Terios I (J1) 10/97-11/05 ... 114
Terios II (J2) / Bego 11/05- ... 114
Trevis 6/06- ... 114
YRV (M2) 2/01-1/05 ... 114

DAIHATSU LCV

Hijet II (U60) 1/92- ... 115

DODGE

400 ... 115
600 ... 115
Aries ... 115
Caliber 6/06-12/12 ... 115
Caravan ... 115
Challenger ... 115
Colt ... 115
Daytona ... 115
Dynasty ... 115
Lancer ... 115
Mini Ram Van ... 115
Neon ... 115
Nitro 6/07-12/12 ... 115
Omni ... 115
Shadow ... 115
Spirit 1/91-12/99 ... 115
Stratus ... 115
Vista ... 115

DODGE TRUCK

AD100 - AD150 ... 116
B100 - 150 - 200 - 250 - 300 - 350 - 400 ... 116
D100 - 150 - 200 - 250 - 300 - 350 - 400 - 450 ... 116
D50 - Ram 50 ... 116
Dakota ... 116
Durango ... 116
M300 - 400 ... 116
Plymouth Truck ... 116
Plymouth Truck Voyager ... 116
Raider ... 116
Ram 1500 - 2500 ... 116

MAKE - MODEL	PAGE

Rampage ... 116
W100 - 150 - 200 - 250 - 300 - 350 - 400 ... 116

FIAT

1000er-Serie 7/53-3/69 ... 116
124 7/66-7/75 ... 117
124 Coupe 6/67-2/76 ... 117
124 Spider 1/66-9/85 ... 117
125 7/67-3/74 ... 117
126 9/72-9/00 ... 117
127 6/71-12/86 ... 117
128 3/69-12/84 ... 118
131 10/74-12/84 ... 118
132 4/72-12/82 ... 119
147 / Spazio 10/76-12/95 ... 119
500 1/57-1/76 ... 119
500 II L (199L) 9/12- ... 120
500 II, C (150, 312) 7/07- ... 120
500L Living (199L) 9/13- ... 120
600 3/55-2/72 ... 120
850 7/64-12/72 ... 121
900 T/E 1/78-1/86 ... 121
Albea 1/03-12/05 ... 121
Argenta (132A) 6/78-7/86 ... 121
Barchetta (183) 4/95-5/05 ... 122
Brava, Bravo (182) 10/95-10/01 ... 122
Bravo (198) 3/07-12/14 ... 123
Cinquecento (170) 7/91-1/98 ... 123
Coupe (FA/175) 11/93-8/00 ... 123
Croma (154) 12/85-12/96 ... 124
Croma (194) 5/05-12/10 ... 125
Doblo I (223) 3/01-4/05 ... 125
Doblo II (119) 5/05-12/09 ... 125
Doblo III (152) 1/10- ... 126
Duna (146 B), Weekend 1/87-12/91 ... 126
Grande Punto IV (199) 9/05-1/12 ... 126
Idea (135) 1/04-12/12 ... 127
Linea (323) 6/07-12/14 ... 128
Marea (185) 9/96-12/07 ... 128
Marea (185) Weekend 9/96-12/07 ... 129
Multipla (186) 4/99-6/10 ... 129
Palio Weekend (178DX) 4/96- ... 130
Palio/Siena I (178BX) 4/96-10/11 ... 131
Panda I (141A) 10/80-7/04 ... 131
Panda II (169) 9/03-1/12 ... 132
Panda III (312, 519, 319) 2/12- ... 133
Punto Evo (199) 10/09-12/12 ... 133
Punto I (176,C), Cabrio 9/93-9/99 ... 134
Punto II (188) 9/99-7/03 ... 134
Punto III (188) 6/03-12/10 ... 135
Punto IV (199) 2/12- ... 135
Regata (138) 9/83-12/90 ... 136
Regata Weekend 1/84-12/90 ... 136
Ritmo I (138A) 1/78-12/87 ... 137
Ritmo II (138A) 10/82-12/88 ... 138
Sedici (189) 1/06-12/14 ... 138
Seicento (187) 1/98-12/10 ... 139
Stilo (192), MultiWagon 10/01-12/10 ... 139
Tempra (159) 3/90-8/96 ... 139
Tempra (159) SW 3/90-8/96 ... 140
Tipo (160) 7/87-8/96 ... 141
Tipo II (356) 1/16- ... 143
Ulysse I (220) 6/94-8/02 ... 143
Ulysse II (179AX) 8/02-12/10 ... 143
Uno (146A/E) 1/83-12/10 ... 143
X 1/9 (128 AS) 5/73-12/89 ... 145

FIAT LCV

238-Serie 9/66-6/82 ... 145

MAKE - MODEL	PAGE

241-Serie 1/67-12/79 ... 145
242-Serie Van 10/75-7/82 ... 145
Bravo Van 4/07-12/14 ... 146
Cinquecento Van 1/92-1/98 ... 146
Doblo Cargo I-II (223) 3/01-12/09 ... 146
Doblo Cargo III (263) 2/10- ... 147
Ducato I (280) 1/82-8/90 ... 147
Ducato II (290) 3/89-3/94 ... 148
Ducato III (230) 3/94-4/02 ... 149
Ducato IV (244, Z) 4/02-1/06 ... 151
Ducato V (250,251) 2/06-5/14 ... 151
Fiorino I (127) 10/77-12/87 ... 152
Fiorino II (147) 1/86-12/93 ... 152
Fiorino III (146) 1/93-12/06 ... 152
Fiorino IV (225) 1/07- ... 153
Grande Punto Van (299) 9/05-1/12 ... 153
Idea Van 1/04-12/12 ... 153
Marengo 1/83-12/01 ... 153
Multipla Van 4/99-12/10 ... 153
Panda Van I (141A) 1/86-8/98 ... 153
Panda Van II (169, 271) 9/03-1/12 ... 154
Panda Van III (312, 519) 2/12- ... 154
Punto Evo (199) Van 3/09-12/12 ... 154
Punto Van I (176L) 4/96-2/00 ... 154
Punto Van II (188AX) 2/00-8/05 ... 155
Qubo IV (225) 1/08- ... 155
Scudo I (220L) 2/96-12/06 ... 155
Scudo II (272) 1/07- ... 156
Seicento Van 1/98-12/10 ... 156
Stilo Van 1/03-12/10 ... 156
Strada I (178E) 6/99-1/05 ... 156
Strada II (178EXG) 2/05- ... 156
Talento (290) 3/89-3/94 ... 157
Uno Van 1/83-10/95 ... 157

FORD AUSTRALIA

Cortina (TD, TE, TF) ... 157
Fairlane/ Ltd (ZA,ZB,ZC,ZD) ... 157
Falcon (XA,XR,XT,XW,XY) ... 157
Falcon (XB) ... 157

FORD BRASIL

Festiva ... 157

FORD EUROPE

Anglia 1/59-1/67 ... 157
B-Max 10/12- ... 157
Capri I (ECJ) 12/68-2/74 ... 158
Capri II (GECP) 2/74-12/77 ... 158
Capri III (GECP) 1/78-4/87 ... 158
C-Max I 2/07-10/10 ... 158
Consul (GGCL,FL,NL) 1/72-12/75 ... 158
Cortina 10/62-3/72 ... 158
Cougar (EC) 8/98-12/01 ... 159
Ecosport 2/14- ... 159
Escort I (AFH,ATH) 1/68-2/76 ... 159
Escort II (ATH) 3/73-7/81 ... 159
Escort III (GAA) 9/80-7/86 ... 160
Escort IV (GAF,AWF,ABFT) 10/85-10/90 ... 160
Escort V (GAL) 7/90-12/92 ... 161
Escort VI (GAL) 9/92-1/95 ... 161
Escort VII (GAL,AAL,ABL) 1/95-8/00 ... 162
Escort VIII (AAL,ABL) 10/98-7/00 ... 163
Fiesta I 5/76-8/83 ... 163
Fiesta II (FBD) 9/83-11/89 ... 163
Fiesta III (GFJ) 1/89-12/95 ... 163
Fiesta IV (JA, JB) 8/95-1/02 ... 164

MAKE - MODEL	PAGE
Fiesta V (JH) 11/01-9/08	165
Fiesta VI 10/08-12/12	166
Fiesta VII 2/13-	166
Focus C-Max 10/03-4/08	166
Focus I, SW 10/98-10/04	166
Focus II 11/04-3/08	167
Focus II Cabrio 10/06-3/08	168
Focus II SW 11/04-3/08	168
Focus III CC 4/08-4/11	168
Focus III, SW 1/08-4/11	168
Focus IV (TA), SW 4/11-	168
Fusion (JU) 8/02-12/12	169
Galaxy I (VX, WGR, VY) 3/95-8/06	169
Granada I (GGTL,FL), SW 1/72-8/77	170
Granada II (GU), SW 8/77-8/85	170
Ka I (RB) 9/96-11/08	171
Ka II (RU8) 12/08-	172
Laser 1/86-	172
Maverick I 2/93-4/98	172
Meteor 1/86-	172
Mondeo I (GBP), SW 2/93-8/96	172
Mondeo II (BAP), SW 9/96-11/00	173
Orion I (AFD) 7/83-3/86	173
Orion II (AFF) 12/85-7/90	173
Orion III (GAL) 7/90-12/93	174
Puma (EC) 3/97-12/01	175
Ranger II (TU, ER, EQ) 10/99-12/06	175
Ranger IV (TKE) 4/10-	175
Sierra I, SW 8/82-12/86	175
Sierra II, SW 1/87-2/93	176
Street Ka 5/03-12/06	177
Taunus 17M 8/57-4/74	177
Taunus 20M 11/64-4/74	177
Taunus 20M Xl 7/67-4/74	177
Taunus 26M Xl 10/69-4/74	177
Taunus I (GBFK) 1/70-2/76	177
Taunus II (GBTS,GBFS,CBTS) 5/75-7/79	177
Taunus III 80 (GBS, GBNS) 7/79-7/82	177
FORD LCV	
Anglia 1/65-1/67	177
Cortina 1/82-1/88	178
Escort I Van 1/68-1/73	178
Escort II Van 1/73-1/81	178
Escort III Van (AVA) 3/81-2/86	178
Escort IV Van (AVF) 2/86-7/90	178
Escort V Van (AVL) 7/90-12/94	178
Escort VI Van (AVL) 1/95-8/00	179
Fiesta I Van 5/76-8/83	179
Fiesta II Van 3/83-2/89	179
Fiesta III Van, Courier 3/89-7/95	179
Fiesta IV Van, Courier 8/95-8/02	179
Fiesta V Van 11/01-4/08	179
G2 Courier 1/86-	179
P 100 II 10/87-12/93	180
Serie A 1/73-1/83	180
Thames 1/61-1/65	180
Tourneo (EBS) 1/94-12/00	180
Tourneo Connect I 9/02-11/13	180
Tourneo Courier 2/14-	180
Transit I 4/55-4/67	180
Transit II 1/65-9/78	180
Transit III (V) 11/77-10/86	181
Transit IV (T) 11/85-9/92	182
Transit V (E1) 1/91-9/94	183
Transit VI (E2) 7/94-6/00	184
Transit VII (FA, FD, FM) 1/00-3/06	184
Transit VIII 7/06-4/14	185
Transit VIII Tourneo 7/06-8/14	185
Transit Connect I 9/02-10/13	185
Transit Courier 2/14-	185

MAKE - MODEL	PAGE
FORD USA	
Cougar	185
Custom	186
Elite	186
Escort, SW 1/91-12/96	186
Fairlane	186
Falcon	186
Granada	186
LTD	186
Maverick	186
Mustang I - II	186
Probe I 8/88-7/93	186
Probe II (ECP) 10/93-3/98	186
Ranger 10/90-	186
Taurus	186
Tempo	186
Thunderbird	186
Torino - Gran Torino	186
Windstar	187
FORD USA TRUCK	
1 Ton	187
3/4 Ton	187
Aerostar Van	187
Bronco I	187
Bronco II	187
E150	187
E250	187
Explorer	187
F 100 - 150 - 200 1/96-12/09	187
F 250	187
Ranchero	187
Serie E	187
Serie P	188
FSO	
125P, SW 10/67-8/92	188
126P 7/72-9/00	188
127P 10/69-10/76	188
132P 1/74-9/78	188
Polonez I 10/77-12/91	188
GEO	
Metro	188
Prizm 1/89-12/97	188
Spectrum	188
Storm	188
Tracker 1/89-12/98	188
GMC TRUCK	
C10, 15, K10 Suburban	189
C20 Suburban	189
C20, 25 Pick-Up	189
Caballero	189
G10/15 Van	189
G20/25	189
G30, 35	189
G35	189
Jimmy	189
Jimmy S15	189
Jimmy T15	189
K10, 15 Pick-Up	189
LLV Postal Vehicle	189
Range 10	189

MAKE - MODEL	PAGE
Range 20	189
Range 30	189
Safari Mini Van	189
Safari Van	189
V20 Suburban	189
V25	189
Yukon	189
GOGGOMOBIL	
Coupe 2/57-4/61	190
Dart	190
Limousine 2/55-3/58	190
Pick-Up	190
HONDA	
Acclaim 1/81-12/84	190
Accord I (SJ, SY, SM, SV, SZ) 1/78-9/83	190
Accord II (AC, AD) 9/83-10/85	190
Accord III (CA4, CA5), Aerodeck 11/85-12/89	190
Accord IV (CB3, CB7) 1/90-12/93	190
Accord V (CC7) 3/93-2/98	191
Accord VI (CE, CF) 2/96-10/98	191
Accord VII (CG) 2/98-1/03	191
Accord VIII, Tourer (CL, CM) 2/03-6/08	191
Acty (TN) 8/78-6/86	191
Ballade 1/81-1/92	191
Civic I 7/72-12/84	192
Civic I Shuttle (AN, AR) 10/83-10/87	192
Civic II 10/83-10/87	192
Civic III (EC, ED, EE) 9/87-9/91	192
Civic IV (EG) 10/91-11/95	193
Civic IV Coupe (EJ) 1/94-3/96	193
Civic IV Coupe (MA, MB) 9/94-1/97	193
Civic V (EJ9, EK1/3/4) 11/95-2/01	194
Civic V Aerodeck (MC) 4/98-2/01	194
Civic V Coupe (EJ6, EJ8) 3/96-3/00	194
Civic V Fastback (MA, MB) 1/97-2/01	194
Civic VI (ES) 2/01-9/05	195
Civic VI Coupe (EM) 2/01-12/05	195
Civic VI Hatchback (EU, EP) 2/01-12/05	195
Civic VII H-Back (FD) 1/06-2/12	195
Civic VIII, Tourer (FK) 3/12-	195
Concerto (HW) 8/89-3/95	195
Cr-v I (RD1, 3) 10/95-6/05	195
Cr-v II (RD8) 7/02-12/06	196
Crx I (AF, AS) 10/83-10/87	196
Crx III (EH, EG) 3/92-12/98	196
Cr-z (ZF1) 6/10-	196
FR-V (BE) 1/04-12/09	196
HR-V I (GH) 3/99-12/06	196
Insight I (ZE) 8/00-5/06	196
Integra I (DA1,2,4) 10/85-8/89	196
Integra III (DC2,4) 11/97-10/01	196
Jazz III (GD)/ Fit 3/02-10/08	196
Jazz IV (GE)/ Fit 11/08-10/10	196
Jazz V 11/10-8/15	196
Jazz VI 9/15-	196
Legend I (HS, KA) 1/86-12/90	196
Logo (GA3) 3/99-3/02	197
Prelude I Coupe (SN) 1/78-10/83	197
Prelude II (AB) 11/83-4/87	197
Prelude IV (BB) 2/92-9/96	197
Prelude V (BB) 10/96-12/01	197
Quintet (SU) 2/80-12/84	197
Shuttle (RA) 10/94-6/02	197
Stream I (RN) 5/01-9/05	197

MAKE - MODEL	PAGE
HONDA USA	
Civic	197
HYUNDAI	
Accent I (X-3)/Pony III 10/94-1/00	197
Accent II (LC)/Verna 1/00-6/06	198
Accent III (MC) 6/06-10/10	198
Accent IV (RB) 11/10-	198
Atos (MX)/ Amica 2/98-8/08	198
Atos Prime (MX)/ Amica 8/99-8/08	198
Coupe I (RD)/Tiburon 8/96-4/02	199
Coupe II (GK) 3/02-12/09	199
Elantra I (XD) 6/00-5/11	199
Excel I (X1) 1/86-1/90	199
Excel II (X2) 1/90-5/96	200
Galloper I 8/91-7/98	200
Galloper II (JK-01) 8/98-12/03	200
Getz (TB) 9/02-12/11	200
i10 I (PA) 5/08-12/13	200
i20 I (PB, PBT) 3/09-1/15	201
i20 II, Coupe (GB) 1/15-	201
i30 I (FD), SW 9/07-4/12	201
ix35 (LM, EL, ELH) 1/10-12/15	201
Lantra 1/86-6/90	201
Lantra I (J-1) 10/90-11/95	201
Lantra II (J-2), SW 11/95-9/00	201
Matrix (FC) 6/01-12/08	202
Pony I 6/74-9/89	202
Pony II (X-2) 10/89-1/95	203
S Coupe (SLC) 2/90-5/96	203
Santa Fe I (SM) 2/01-2/06	203
Santa Fe II (CM) 3/06-3/12	203
Solaris (RB) 11/10-	203
Sonata I (Y-2) 9/88-10/93	203
Sonata II (Y-3) 5/93-6/98	203
Sonata III (EF) 3/98-10/01	204
Sonata V (NF) 1/05-12/09	204
Starex (H1) 6/97-	204
Stellar 10/83-12/91	204
Terracan (HP) 12/01-7/07	204
Tiburon Coupe 10/06-	204
Trajet (FO) 3/00-12/08	204
Tucson I (JM) 8/04-3/10	205
HYUNDAI LCV	
Grace Bus 7/93-10/04	205
H-1 Van, Starex 10/97-	205
H100 Bus (P) 7/93-	205
Porter 7/94-4/04	206
IHC TRUCK	
AD100 - AD150	206
Scout - Scout II	206
Serie 90	206
Serie Metro	206
INNOCENTI	
Elba (146) 4/86-12/97	206
Mille 1/94-12/98	206
Mini I 1/69-1/77	206
Mini II 1/77-10/85	206
Mini III 10/85-10/91	207
Small 1/87-	207
Spider	207

MAKE - MODEL	PAGE
ISUZU	
Amigo 1/89-	207
D-Max/Wizard/Frontier 5/02-	207
Faster 1/81-12/87	207
Gemini I (JT) 1/82-12/90	207
Hombre	207
Mark I 1/82-12/91	207
Pick-Up (TFR-TFS)	207
Rodeo 1/88-	208
Serie KB II 7/04-	208
Serie TF	208
Stylus 1/89-12/93	208
Trooper I (UBS) 1/83-12/91	208
Trooper I Soft Top (UBS) 1/83-12/91	208
WFR 11 - 12 - 53 - 62 1/83-12/89	208
IVECO BUS	
A 70.14 Z	208
Autobus	208
IVECO TRUCK	
100 1/73-	209
109 1/83-12/91	209
110 1/73-	209
115	209
120 1/75-	209
130 1/74-	209
135	209
140 1/75-	209
145 1/87-	209
150 1/75-	210
159 1/70-	210
170 1/75-	210
175	210
180 1/74-	210
190 1/75-	210
220 1/77-	210
240 1/69-	210
300 1/74-	210
40/35 1/66-12/71	210
50 1/66-12/86	210
55 1/70-	211
60 1/79-12/91	211
615 1/51-12/58	211
616 1/65-12/71	211
619 1/70-	212
625 1/71-	212
643 1/63-12/71	212
645 1/60-12/73	212
65 1/70-12/91	212
650 1/60-12/73	213
653	213
655 1/66-12/71	213
662 1/60-12/71	213
672 1/69-	213
673 1/69-	213
684 1/70-	213
691 1/69-	213
697 1/70-	213
70 1/70-12/92	213
75 1/70-	214
79 1/83-12/91	214
80 1/70-	214
90 1/70-	215
95 1/83-12/91	215
A 55.10	215
Cerbiatto	215
Daily - Grinta 1/79-12/90	215

MAKE - MODEL	PAGE
Daily I 1/91-1/99	216
Daily II 2/99-4/06	216
Daily III 5/06-12/10	217
Daily IV 1/11-2/14	217
Daino	217
EuroCargo 1/91-12/11	217
EuroStar 1/93-12/02	218
EuroTech MH 1/98-12/03	219
EuroTech MP 1/92-12/03	219
EuroTrakker 1/93-12/04	219
Leoncino 1/55-12/60	220
Lupetto 1/60-	220
Orsetto 1/65-	221
Stralis 1/02-	221
Tigrotto 1/65-	222
Turbostar 7/84-12/93	222
Z 230 T	222
JAGUAR	
Double Six & Sovereign 1/76-1/84	222
XJ I 9/68-9/86	222
JEEP	
Cherokee II (XJ) 10/84-8/01	222
Cherokee III (KJ) 9/01-6/08	222
Cherokee IV (KK) 7/08-3/14	222
Compass 9/06-	223
Grand Cherokee I (Z) 9/91-4/99	223
Patriot 11/07-12/12	223
Wrangler II (TJ) 8/96-4/07	223
JEEP USA	
Cherokee	223
Comanche	223
Dispatcher	223
Grand Cherokee	223
Jeepster Commando	223
Liberty	223
Serie CJ - Universal 4x4	223
Serie J10, J20	223
Serie YJ	223
Wagoneer - Grand Wagoneer	224
Wrangler	224
KIA	
Carens I 11/00-7/02	224
Carens II (FJ) 7/02-8/06	224
Carens III 9/06-12/09	224
Carnival I (UP) 8/99-10/01	224
Carnival II/ Sedona (GQ) 10/01-5/06	224
Ceed I, SW (ED) 3/07-6/12	224
Cerato (LD) 4/04-12/08	224
Magentis I (GD) 5/01-10/05	224
Picanto I (BC) 4/04-4/08	225
Picanto II (BA) 5/08-4/11	225
Picanto III (TA) 5/11-	225
Pride (DA) 1/90-12/00	225
Pro Ceed I (ED) 2/08-12/12	225
Rio I, SW (DC) 8/00-2/05	225
Rio II (JB) 3/05-9/11	225
Rio III (UB) 9/11-	225
Sephia, Timor (FA) 9/93-12/03	225
Shuma (FB) 3/96-12/04	225
Sorento I (JC) 8/02-12/09	226
Sportage I (FM, K00) 4/94-8/04	226
Sportage II (FQ) 9/04-6/10	226

MAKE - MODEL	PAGE
Sportage III (SL) 7/10-2/16	226
KIA LCV	
Pregio (TB) 10/97-12/06	226
LADA	
110 1/95-	226
111 1/95-	226
112 1/95-	226
1200-1600 1/70-1/87	226
Kalina (1117, 1118, 1119) 10/04-11/13	227
Nadeschda (2120) 12/97-	227
Natasha (2120)	227
Niva I (2121) 12/76-	227
Niva II (2123) 9/02-	228
Nova (2105, 2108, 2109) 5/81-	228
Riva	229
Sagona	229
Samara, Forma (2108, 2109) 1/88-	229
Shiguli (2107) 1/70-	230
LANCIA	
Beta (828B) 8/73-7/82	230
Beta Coupe (828BC) 4/76-12/84	230
Beta H.P.E. (828BF) 5/76-9/84	230
Beta Monte Carlo (137AS, 137BS) 7/80-5/81	230
Dedra (835) 4/89-7/99	230
Delta I (831AB0) 9/79-1/94	230
Delta II (836) 6/93-8/99	231
Delta III (844) 7/08-12/14	231
Gamma, Coupe 8/81-12/84	231
Kappa (838A,B), SW 8/94-10/01	231
Lybra (839AX,BX), SW 7/99-12/05	232
Musa I (184) 10/04-11/10	232
Musa II 12/10-6/13	233
Phedra (179) 9/02-12/10	233
Prisma (831AB0) 12/82-2/92	233
Thema (834) 11/84-4/97	233
Trevi (828DB) 5/80-1/87	234
Y (840A) 11/95-10/03	234
Y10 (156) 3/85-12/95	235
Ypsilon I (843) 10/03-12/13	235
Ypsilon II (846) 6/11-	236
Zeta (220) 5/95-9/02	236
LAND ROVER	
109 9/63-12/86	236
110 9/83-7/90	237
88 9/63-12/86	237
90 9/83-7/90	237
Defender I (LD) 110 9/90-4/07	237
Defender I (LD) 130 9/90-4/07	237
Defender I (LD) 90 9/90-4/07	237
Discovery II (LJ, LT) 6/94-9/04	237
Freelander I (LN) 2/98-2/06	238
LDV	
Convoy 1/96-12/06	238
LEXUS	
IS II (XE2) 10/05-6/13	238

MAKE - MODEL	PAGE
LINCOLN	
Continental	238
Mark III, IV, V, VI, VII, VIII	238
Town Car	238
LOTUS	
Europa I 10/66-4/76	238
Europa II 8/76-1/83	238
MARCOS	
1800 1/64-12/70	238
MATRA	
Ranch	238
MAZDA	
1000 1/75-1/77	238
121 I (DA) 10/87-10/90	238
121 II (DB) 11/90-3/96	238
121 III (JASM, JBSM) 3/96-10/02	239
1300 1/75-1/77	239
2 I (DY) 4/03-7/07	239
2 II (DE) 8/07-12/14	239
2 III (DL, DJ) 11/14-	239
3 I (BK) 10/03-4/09	239
3 II (BL) 5/09-9/13	239
323 I (FA), SW 1/77-5/86	239
323 II (BD) 9/80-10/89	240
323 III (BF, BW) 8/85-10/95	240
323 IV (BG) 6/89-10/94	240
323 V (BA) 8/94-9/98	240
323 VI (BJ) 9/98-10/03	240
6 I (GG,GY), SW 6/02-7/07	241
616 6/73-2/78	241
626 I (CB) 5/79-5/82	241
626 II (GC) 11/82-9/87	241
626 III (GD,GV), SW 6/87-9/97	241
626 IV (GE), Cronos 1/92-4/97	241
626 V (GF,GW), SW 5/97-12/02	241
808 1/74-10/78	241
818 SW 1/74-10/78	241
929 I (LA) 5/79-7/86	241
BT-50 I (UN) 12/06-10/11	241
Demio (DW) 8/98-12/02	242
GLC 1/77-1/86	242
Mizer 1/77-1/86	242
Montrose 1/79-1/81	242
MPV I (LV) 1/89-9/99	242
MPV II (LW) 9/99-10/05	242
MX-3 (EC) 7/91-12/98	242
MX-5 I (NA) 5/90-4/98	242
MX-5 II (NB) 5/98-2/05	242
MX-5 III (NC) Coupe, Spider 3/05-5/15	242
MX-6 (GE6) 2/92-12/97	242
Navajo 1/91-1/94	242
Premacy I (CP) 7/99-3/05	242
Protege 1/90-1/92	242
RX 2 1/70-1/76	242
RX 3 1/74-1/76	242
RX 4 1/73-1/78	242
RX 7 I (SA) 5/79-3/86	243

MAKE - MODEL	PAGE
MAZDA LCV	
B-Serie I (PE) 2/77-1/82	243
B-Serie I Rotary 1/71-2/77	243
B-Serie III (UF) 1/85-6/99	243
B-Serie IV (UN) 2/99-12/06	243
E-Serie II (SR2) 5/84-12/04	243
MERCEDES BENZ	
114 (W114) 1/68-11/76	243
114 Coupe (W114) 4/69-2/77	244
115 (W115) 1/68-1/77	244
190 II (W201) 10/82-8/93	244
Classe A I (W168) 7/97-8/04	245
Classe A II (W169) 9/04-5/12	246
Classe B I (W245) 3/05-9/11	246
Classe C I (W202) 3/93-5/00	246
Classe C I SW (S202) 6/96-3/01	248
Classe C II (W203) 5/00-12/06	248
Classe C II SportCoupe (CL203) 3/01-12/06	249
Classe C II SW (S203) 3/01-12/06	250
Classe E I (W124) 6/93-6/95	251
Classe E I Cabrio (A124) 6/93-3/98	252
Classe E I Coupe (C124) 6/93-6/97	252
Classe E I SW (S124) 6/93-6/96	252
Classe E II (W210) 6/95-3/02	253
Classe E II SW (S210) 6/96-3/03	255
Classe G (W460) 3/79-7/93	256
Classe G (W461) 2/90-	256
Classe G (W463) 9/89-	256
Classe G Cabrio (W463) 9/89-	256
Classe M I (W163) 2/98-6/05	256
Classe S I (W108,W109) 1/66-8/72	257
Classe S II (W116) 8/72-7/80	257
Classe S III (W126) 10/79-6/91	257
Classe S III Coupe (C126) 10/81-6/91	258
Classe S IV (W140) 2/91-10/98	258
Classe S V (W220) 10/98-9/05	258
Classe V (638/2) 9/96-12/03	258
CLC (C204) 6/08-12/11	258
CLK I (C208) 6/97-6/02	259
CLK I Cabrio (A208) 3/98-5/02	259
CLK II (C209) 6/02-12/09	259
CLK II Cabrio (A209) 2/03-12/09	260
Coupe I (W111) 1/61-12/71	260
Coupe II (C123) 3/77-12/85	260
Coupe III (C124) 3/87-3/89	261
Coupe IV (C124) 3/89-5/93	261
SL I (R107) 5/71-8/89	261
SL I Coupe (C107) 1/72-9/81	261
SL II (R129) 3/89-10/01	261
SLK I (R170) 9/96-2/04	262
SLK II (R171) 3/04-2/11	262
T-Model I (W123) 1/76-12/85	262
T-Model I SW (S123) 9/77-12/85	263
T-Model II (W124) 12/84-6/93	264
T-Model II SW (S124) 9/85-9/89	265
T-Model III SW (S124) 9/89-6/93	266
Vaneo (W414) 2/02-12/05	267
Viano (W639) 9/03-12/13	267
MERCEDES BENZ LCV	
Citan (415) 11/12-	267
MB100 (631) 2/88-12/94	267
Sprinter I 2-T (901, 902) 2/95-5/06	267
Sprinter I 3-T (903) 2/95-5/06	268
Sprinter I 4-T (904) 2/96-5/06	268
Sprinter I 6-T (905) 4/01-5/06	269

MAKE - MODEL	PAGE
Sprinter II 3,5-T (906) 6/06-8/13	269
Sprinter II 3-T (906) 6/06-8/13	269
Trasporter (BM309) 1/68-	269
Trasporter (BM310) 1/68-	270
Trasporter (BM313) 1/77-	270
Trasporter (BM601) 5/77-1/95	270
Trasporter (BM602) 5/77-1/95	270
Trasporter (BM605) 1/73-4/77	271
Trasporter (BM606) 1/77-4/77	271
Trasporter (BM607) 1/72-12/73	271
Trasporter (BM608) 1/72-	271
Trasporter (BM611) T1/TN 6/73-1/95	271
Vario 9/96-12/13	271
Vito I (638) 3/97-8/03	271
Vito II (639) 9/03-9/14	272
MERCEDES BENZ TRUCK	
200-300 (BM460) 2/79-	272
Bus (BM309/310) 1/69-	272
Unimog 1/73-12/00	272
MERCURY	
Capri	272
Comet - Cyclone	272
Cougar 1/98-12/02	272
Linx	272
LN7	272
Merkur Xr4 Ti	272
Monarch	272
Montego	272
Mystique 2/96-12/00	273
Sable	273
Topaz	273
Tracer 1/87-12/99	273
Villanger	273
XR7	273
MINI	
Mini I (R50, R53) 6/01-10/06	273
Mini II Clubman (R55) 11/07-12/13	273
Mini II, Cabrio (R56, R57) 11/06-12/13	273
Mini III Countryman (R60), Paceman (R61) 6/10	273
Mini III Coupe, Roadster (R58, R59) 8/11-5/15	274
MITSUBISHI	
Carisma (DA) 7/95-10/04	274
Celeste (A7) 10/75-6/81	274
Colt I (A15A)/ Champ 12/69-1/84	274
Colt II (C1A)/ Champ 2/84-4/88	274
Colt III (C5A) 4/88-5/92	274
Colt IV (CAA) 4/92-4/96	274
Colt V (CJA) 11/95-6/04	275
Colt VI (CZ, Z2, Z3) 6/04-6/12	275
Colt VII (Z30) 3/09-6/12	275
Cordia (A21A) 10/82-12/86	275
Eclipse I (D2A) 4/91-11/95	275
Eclipse II (D3) 12/95-4/99	275
Galant I (A12/V) 1/69-12/82	275
Galant II (A16/V), SW 9/80-5/84	275
Galant III (E1A) 6/84-12/87	275
Galant IV (E3A) 11/87-10/92	276
Galant V (E5A, E7A, E8A) 11/92-8/96	276
I-Miev (HA) 6/11-	276
L200 II (KT) 11/86-8/96	276
L200 III 6/96-5/06	276
L200 IV (KA, KB) 5/06-10/14	276
Lancer (A7) 1/74-9/79	276
Lancer I (A17) / Mirage 9/69-2/83	276
Lancer II F (A17)/ Mirage 3/83-1/84	277
Lancer III (C1A, C6A)/ Mirage 11/83-6/92	277
Lancer III (C1V, C3V) SW/ Mirage 1/84-6/92	277
Lancer IV (C6A, C7A)/ Mirage 4/88-5/94	277
Lancer V (CB/DA)/ Mirage SW 6/92-11/95	277
Lancer V (CB/DA)/ Mirage, Coupe 6/92-11/95	277
Lancer VI (CK/PA)/ Mirage coupe 12/95-12/07	278
Pajero I (L04G, L14G)/ Montero I/ Shogun I 12/82-12/91	278
Pajero Pinin (H6W, H7W) 10/99-12/06	278
Precis 1/83-1/94	278
Sapporo I (A12) 4/78-7/80	278
Sapporo II (A16A) 8/80-9/84	278
Sapporo III (E16A) 6/87-8/90	278
Sigma I 1/78-1/81	278
Space Gear (PA/B/DV/W) 5/95-12/06	278
Space Runner I (N1W, N2W) 10/91-8/99	279
Space Star I (DG0) 6/98-12/05	279
Space Star II 6/13-	279
Space Wagon I (D0V/W) 1/83-4/91	279
Space Wagon II (N3W, N4W) 10/91-10/98	279
Space Wagon III (N5W) 10/98-12/03	279
Tredia (A21) 9/82-10/87	279
Vista 1/85-1/91	279
MITSUBISHI LCV	
L300 I (L03P/G, L02P) 5/78-2/87	279
L300 II (P0W, P1W, P2W)/ Delica 11/86-4/94	280
NISSAN	
100 NX (B13) 3/90-10/94	280
200 (S30) 8/76-6/78	280
200 SX (S11) 1/77-12/84	280
Almera I (N15) 9/95-7/00	280
Almera II (N16) 7/00-12/06	280
Almera Tino (V10) 8/00-12/06	281
Avia 1/80-	281
Axxess 1/89-1/91	281
Bluebird (510) 1/68-12/73	281
Bluebird (610) 7/74-11/79	281
Bluebird (710) 7/74-1/77	281
Bluebird (810) 1/76-1/83	281
Bluebird (910) 1/80-3/85	281
Bluebird (T72 , T12) 12/85-6/91	281
Bluebird (U11/ WU11) 11/83-12/90	282
Cherry I (F10-F11) 1/76-10/78	282
Cherry II (V/N10) 8/78-12/83	282
Cherry III (N12) 5/82-12/86	282
Datsun 120 (C120, 20)	282
E20 1/83-	282
Ebro 1/76-	282
Evalia 9/11-	282
L 35 / L 45 1/82-	282
Laurel (HLC230) 3/72-5/83	282
Laurel (JC31) 1/81-12/85	282
Laurel (JC32) 1/85-12/89	282
Maxima (J30) 10/88-6/94	282
Micra I (K10) 12/82-7/92	282
Micra II (K11) 8/92-2/03	283
Micra III (K12) 1/03-11/10	283
Micra III Cabrio 8/05-11/10	283
Micra IV (K13) 12/10-	283
Murano II (Z51) 11/08-	283
Navara III (D40) 7/05-6/14	283
Note I (E11E) 3/06-7/13	283
Note II (E12) 8/13-	284
Pathfinder I (WD21) 9/82-2/98	284
Pathfinder II (R50) 9/97-2/05	284
Pathfinder III (R51) 3/05-8/12	284
Patrol I (W/K160) SW / Safari 11/79-11/95	284
Patrol I (Y60) Gr / Safari 9/82-6/97	284
Pixo 6/09-12/13	284
Prairie (M10, NM10) 7/83-9/88	284
Prairie Pro (M11) 10/88-7/94	284
Primera I (P10) 6/90-6/96	284
Primera I (W10) SW/ Avenir 7/90-3/98	284
Primera II (P11) 9/96-2/02	285
Primera II (WP11) SW 4/98-2/02	285
Primera III (W/ P12), SW 3/02-12/08	285
Pulsar I/ Langley 8/78-12/83	285
Pulsar III/ Langley 6/86-10/91	285
Qashqai I (J10) 2/07-1/14	285
Sentra II (B11), SW 3/82-9/87	285
Sentra III (N13, B12) 6/86-10/91	285
Sentra IV (N14, B13) 10/90-6/95	286
Serena (C23M) 11/92-12/09	286
Silvia I (S110) 1/76-5/83	286
Silvia II (S12) 4/84-9/88	286
Skyline I (R32) 1/72-1/93	286
Stanza I 7/77-1/83	286
Stanza II (T11) 8/81-12/85	286
Sunny (140Y, 150Y) 1/70-2/82	287
Sunny I (B) 1/71-2/82	287
Sunny II (B11), SW 3/82-9/87	287
Sunny III (N13, B12) 6/86-10/91	287
Sunny IV (N14) 10/90-6/95	287
Sunny IV (Y10) 10/90-6/95	287
Terrano I (WD21) 10/87-2/96	287
Terrano II (R20) 2/93-12/06	287
Tiida (C11X)/ Versa 9/07-12/12	287
Trade 1/86-12/04	288
Violet 1/73-1/81	288
X-Trail I (T30) 7/01-6/07	288
X-Trail II (T31) 7/07-11/13	288
NISSAN LCV	
AW 1 Ton 1/88-	288
Cabstar II (10Q) 1/82-12/87	288
Cabstar II (15Q) 1/82-12/90	288
Cabstar IV (E) 1/98-9/06	288
Interstar (X70) 7/02-12/11	288
Kubistar (X76, X80) 8/03-12/09	289
NP300 8/08-	289
NV200 10/09-	289
Pick-Up (720) 1/80-3/86	289
Pick-Up/King Cab (D21) 9/85-2/98	289
Pick-Up/King Cab II (D22) 2/98-12/07	290
Primastar (X83) 3/01-	290
Sunny III (Y10) Van 11/90-4/01	291
Terrano Van (R20) 6/98-	291
TR Van 1/87-1/89	291
Urvan I (E23) 7/81-11/88	291
Urvan II (E24) 5/87-8/00	291
Vanette I (C12) 1/83-12/87	291
Vanette II (C22) 10/86-12/95	291
Vanette III Cargo (HC23) 1/95-12/09	291
NISSAN USA TRUCK	
Quest	291
NSU	
1200 9/69-11/71	291
Prinz 8/61-3/74	291

MAKE - MODEL	PAGE
OLDSMOBILE	
442	291
88	291
88, 98 Custom, Delta, Regency, Royale	292
Achieva	292
Bravada 1/91-12/02	292
Calais I	292
Calais II	292
Calais III	292
Ciera - Cutlass	292
Cutlass Supreme I 1/64-1/88	292
F85	292
Firenza II	292
Omega	292
Silhouette Van	292
Toronado - Trofeo	292
Vista Cruiser - Cutlass Cruiser	292
OM (CARRELLI ELEVATORI)	
OM	292
OPEL	
Adam 2/13-	293
Agila A 9/00-12/07	293
Agila B 1/08-12/14	293
Ascona A 10/70-8/75	294
Ascona B / Cavalier I 9/75-8/81	294
Ascona C / Cavalier II 9/81-8/88	294
Astra D, SW 9/79-8/91	295
Astra F Classic, SW 1/98-3/04	296
Astra F, SW 9/91-9/98	296
Astra G, SW 9/98-3/04	298
Astra H Cabriolet 9/05-11/09	299
Astra H, SW, GTC 3/04-11/09	300
Astra J, SW, GTC 12/09-8/15	302
Calibra A 6/90-7/97	302
Cascada (W13) 5/13-	303
Chevanne 1/76-1/82	303
Combo Tour II 1/01-12/11	303
Combo Tour III (X12) 2/12-	303
Corsa A / Nova 9/82-3/93	304
Corsa B / Corsa 3/93-9/00	304
Corsa C / Corsa II 9/00-6/06	306
Corsa D 7/06-8/14	308
Corsa E 9/14-	309
Frontera A / Frontera 3/92-10/98	309
GT 9/68-8/73	309
Insignia, SW 1/09-	309
Kadett A, SW 9/62-8/65	310
Kadett B, SW / Chevette B 9/65-8/73	310
Kadett C, SW / Chevette C 8/73-7/79	310
Kadett City 8/73-7/79	310
Kadett D, SW / Astra D 8/79-8/84	310
Kadett E / Astra E, Belmont 9/84-8/91	311
Kadett E Cabrio 9/84-8/91	313
Kadett E SW 9/84-8/91	313
Manta A 9/70-8/75	314
Manta B / Cavalier Coupe 9/75-8/88	314
Meriva A 5/03-6/10	315
Olympia A 8/67-8/71	315
Rekord B 8/65-2/67	315
Rekord C, SW 8/66-12/71	316
Rekord D, SW / Carlton I 1/72-8/77	316
Rekord E, SW / Carlton II 8/77-8/86	316
Signum 5/03-12/08	316
Tigra A 7/94-12/00	317
Tigra B Twintop 6/04-12/09	317
Vectra A (86, 87) / Cavalier III 9/88-11/95	317
Vectra B, SW / Vectra 10/95-4/02	318
Vectra C, SW, Gts / Vectra II 4/02-12/08	319
Viva, SW 1/63-10/79	320
Zafira A 4/99-10/05	320
Zafira B 10/05-12/14	321
Zafira C 12/11-	321
OPEL LCV	
Arena 3/98-8/01	322
Astra F Van (55) 10/91-1/99	322
Astra G Van (F70) 1/99-2/04	322
Astra H Van 3/04-11/09	323
Campo (TF) / Brava Pick-up 8/87-12/03	323
Combo I (71) 7/94-10/01	323
Combo II 10/01-10/11	324
Combo III (X12) 11/11-	324
Corsa A Van / Nova Van 2/86-1/94	325
Corsa B Van (73) / Corsa Van 8/99-9/00	325
Corsa C Van (F08, W5L) / Corsa II Van 9/00-6/06	325
Kadett E Van / Astra E Van 8/84-7/94	326
Movano I 7/98-6/10	326
Vivaro A 8/01-5/14	327
PEUGEOT	
1007 (KM) 4/05-12/10	328
104 10/72-6/88	328
106 I (1A, 1C) 9/91-4/96	329
106 II (1) 5/96-7/04	330
107 6/05-5/14	331
108 6/14-	331
2008 5/13-	331
204 10/65-10/77	331
205 I (741A/C/B) 2/83-10/87	331
205 II (20A/C) 1/87-9/98	333
206 (2A/C), SW 9/98-3/06	335
206 Plus (T3E) 1/09-12/12	336
207, SW (WA, WC, WD, WK) 4/06-12/15	337
208 3/12-	337
301 11/12-	339
304 10/69-10/80	339
305 I (581A) 11/77-9/82	339
305 II (581M/E), Break 10/82-7/90	339
306 (7B, N3) 5/93-5/01	340
306 (7D, N3,5) Cabrio 3/94-4/02	343
306 (7E) Break 5/93-5/01	344
307 I (3A/C/E), SW 8/00-6/05	344
307 II, SW 7/05-12/08	345
308 I Coupe, Cabrio 6/09-12/14	345
308 I, SW 10/07-8/13	345
309 I (10C, 10A) 10/85-12/89	346
309 II (3A/C) 7/89-12/93	346
404 4/63-12/71	348
405 I (15B) 1/87-12/93	348
405 I (15E) Break 1/87-12/92	348
405 II (4B) 8/92-10/96	349
405 II (4E) Break 8/92-10/96	349
406 (8B/E/F), Break, Coupe 11/95-5/04	350
407 I, SW (6D/E/C) 5/04-9/08	351
504 7/68-7/86	351
504 Break 4/71-7/86	354
505 (551A) 8/79-12/93	354
505 Break (551D) 6/81-12/93	355
604 (561A) 8/77-7/87	355
605 (6B) 6/89-9/99	355
607 (9D) 2/00-12/10	355
806 (221) 6/94-8/02	356
807 (E) 6/02-12/14	356
Ion 11/10-	356
Rcz 3/10-12/15	356
PEUGEOT LCV	
205 Van 10/87-9/98	357
206 Van 1/01-3/09	357
207 Van 4/07-12/15	357
306 Van 5/93-12/02	357
308 Van 10/09-12/13	357
Bipper (AA) 2/08-	357
Boxer I (230) 3/94-4/02	358
Boxer II (244) 4/02-3/06	359
Boxer III 4/06-11/14	359
Expert I (222,223,224) 2/96-12/06	360
Expert II Tepee (VF3V) 1/07-	360
J5 (280/290) 9/81-12/94	360
J7 8/68-3/80	361
J9 3/80-6/87	362
Partner/Ranch I (5F) 6/96-3/08	362
Partner/Ranch II, Tepee 4/08-	363
PIAGGIO	
Porter, Van 2/93-	363
PLYMOUTH	
1 Ton - 3/4 Ton	363
Acclaim 1/89-12/95	363
Arrow	363
Caravelle	363
Champ	363
Horizon - TC3	363
Neon	363
Reliant K	363
Sundance - Shelby Sundance	363
PONTIAC	
6000 9/91-	363
6000 - STE 9/86-	363
Bonneville	363
Firebird II	363
Firebird Trans Am	363
Firefly I	364
Firefly II	364
Grand Am I	364
Grand Prix	364
J2000 - Sunbird - Sunfire I	364
J2000 - Sunbird - Sunfire II	364
Lemans	364
Parisienne	364
Phoenix	364
Sunbird	364
T1000 1/93-3/97	364
Trans Sport Van	364
Ventura I-II 1/71-12/77	364
PORSCHE	
911 (997) 7/04-11/12	364
924 11/75-8/89	364
Boxster I (986) 9/96-12/04	364
Boxster I (987) 1/04-11/07	364
Boxster II (987) 12/07-12/11	365
Cayman I (987) 11/05-3/13	365

MAKE - MODEL	PAGE
PROTON	
Persona 300 3/96-12/06	365
Persona 400 1/94-12/06	365
Saga	365
RELIANT	
Fox 1/82-1/90	365
Kitten, SW 1/75-12/83	365
Rebel 1/68-12/73	365
Regal 1/62-1/73	365
Regent 1/59-1/64	365
Rialto 1/82-	365
Robin 1/75-	365
Scimitar Cabrio 1/80-12/85	365
Scimitar Roadster 1/85-12/90	366
Scimitar Sabre Roadster 1/92-12/95	366
Scimitar SW 1/68-12/86	366
RENAULT	
Alliance-Encore 1/83-1/87	366
Alpine 10/84-12/92	366
Avantime (DE0) 9/01-5/03	366
Captur 6/13-	366
Clio I (B/C57, 5/357) 5/90-9/98	366
Clio II (B/C/B0/1) 9/98-5/05	368
Clio III (BR/CR0/1) 6/05-7/12	369
Clio III, Grandtour (KR0/1) 2/08-7/12	370
Clio IV, Sporter, Grandtour 9/12-	371
Espace I (J11) 7/84-12/90	371
Espace II (J/S63) 1/91-10/96	371
Espace III (JE) 11/96-11/02	371
Espace IV (JK0) 11/02-3/15	372
Estafette 2/62-12/81	372
Fuego (136) 2/80-10/85	372
Grand Modus 6/08-8/13	372
Grand Scenic I (JM) 4/04-10/08	373
Grand Scenic II (JZ) 11/08-	373
GTA 8/87-12/91	373
Kangoo I (KC0) 3/98-12/07	373
Kangoo II (KW0/1) 1/08-	374
Kangoo II Be Bop 2/09-	375
Koleos 7/08-12/15	375
Laguna I (B56, 556) 11/93-3/01	375
Laguna I (K56) SW 9/95-3/01	375
Laguna II (B74) 3/01-10/07	376
Laguna II (K74) SW 3/01-10/07	376
Laguna III, SW, Coupe 11/07-12/15	376
Logan I (LS, KS), SW 9/04-9/13	377
Medallion 1/88-1/89	377
Megane I (BA) 1/96-11/02	377
Megane I (DA) Coach 3/96-11/02	379
Megane I (EA0) Cabrio 10/96-11/02	379
Megane I (JA0) Scenic 1/97-9/99	380
Megane I (KA) SW 3/99-11/02	380
Megane I (LA) Classic 9/96-11/02	381
Megane II (BM0, CM0), SW, Coupe 11/02-10/08	382
Megane III Coupe, Cabrio 11/08-	382
Megane III, SW 11/08-2/16	383
Modus (F/JP0) 12/04-9/13	383
R11 (B/C37) 3/83-12/90	384
R12 (117) 10/69-8/80	385
R14 (121) 9/79-12/83	386
R15 3/72-10/80	386
R16 (115) 9/65-8/80	386
R17 3/72-10/80	386
R18 (134) 4/78-7/86	387
R18 (135) Break 5/79-12/86	387
R19 I (B/C53) 1/88-12/92	388
R19 I (D53) Cabrio 9/88-4/92	389
R19 I (L53) Chamade 1/88-12/92	389
R19 II (B/C53) 1/92-6/96	390
R19 II (D53) Cabrio 4/92-6/96	392
R19 II (L53) Chamade 1/92-12/95	392
R20 (127) 10/75-12/83	393
R21 (B48) 3/86-6/94	393
R21 (K48) Nevada 3/86-9/95	395
R21 (L48) 3/86-6/94	396
R25 (B29) 4/84-12/93	397
R30 (127) 2/75-3/86	398
R4 (112) 10/62-6/93	398
R5 7/71-12/85	399
R6 10/69-4/87	400
R9 (L42) 9/81-12/89	401
Rodeo 6 5/70-11/81	402
Safrane I (B54) 4/92-7/96	402
Safrane II (B54) 7/96-12/00	402
Sandero I 11/07-10/13	402
Scenic I (JA) 9/99-6/03	402
Scenic II (JM) 6/03-5/09	403
Scenic III (JZ) 2/09-	403
Sport Spider (EF0) 3/95-10/99	403
Super 5 (B/C40) 10/84-12/96	403
Thalia 2/98-	405
Twingo I (C06) 3/93-6/07	405
Twingo II (CN0) 7/07-	405
Twingo III 10/14-	406
Vel Satis (BJ0) 6/02-	406
RENAULT LCV	
Clio Van I (S57) 1/91-9/98	406
Clio Van II (SB0) 9/98-5/05	407
Extra 1/86-1/98	407
Kangoo I (FC0) Van 3/98-1/08	407
Kangoo II Van (FW0/1) 2/08-	408
Mascott 1/99-10/10	408
Master I 8/80-7/98	409
Master II 7/98-9/03	409
Master III 10/03-1/10	409
Megane II Van 11/02-12/07	410
Modus Van 12/04-12/13	410
R11 Van 3/83-12/88	410
R12 Van 7/75-4/80	410
R18 Van 5/79-7/86	410
R19 I Van 1/88-12/92	410
R19 II Van 3/92-12/95	411
R21 Van 6/86-4/95	411
R4 Van 9/66-12/93	411
R5 Van 1/72-12/85	412
Rapid/Express (F40, G40) Van 7/85-8/98	412
Super 5 (S40) Van 10/84-12/96	414
Trafic I (P6) 3/80-4/89	415
Trafic I Bus 3/80-4/89	415
Trafic I Van 3/80-4/89	415
Trafic II (PXX) 5/89-3/01	415
Trafic II Bus (TXW) 5/89-3/01	416
Trafic II Van (TXX) 5/89-3/01	416
Trafic III (EL, FL, JL) 3/01-4/14	416
Twingo (S06) Van 3/93-	417
ROVER	
100 (METRO) (Xp) 3/90-12/98	417
1000-Series Mk II 1/67-12/78	417
200 I (XH) 3/85-9/89	417
200 II (XW), Coupe 10/89-11/99	417
200 III (RF) 11/95-3/00	418
2000 Mk I 1/51-12/75	418
2000 Mk II 3/72-12/77	418
2000-3500 (SD1) 6/76-10/86	418
25 (RF) 10/99-12/05	418
250 Ju 1/96-	419
2500 5/74-12/77	419
400 I (XW) 4/90-4/95	419
400 II (RT) 5/95-3/00	419
45 (RT) 2/00-12/05	420
600 (RH) 8/93-2/99	420
A40 1/61-12/67	420
Acclaim 1/82-12/85	420
Allegro (ADO 67) 5/73-10/83	420
Ambassador 3/82-10/84	421
Austin 12/68-12/72	421
Austin Taxi 1/70-	421
Coupe 3/96-11/99	421
Dolomite 1/72-12/81	421
EA Range 1/68-1/82	421
GT6 Mk I 1/66-12/68	421
GT6 Mk II 12/68-12/70	421
Herald 1/61-12/71	421
Ital Van 1/82-3/84	421
Ital, SW 7/80-3/84	421
Maestro I (XC) 3/83-1/91	421
Maestro II 9/90-1/95	422
Marina I 4/71-9/75	422
Marina II 3/75-10/78	422
Marina III 9/78-10/80	422
Maxi I 4/69-10/80	423
Maxi II 10/80-12/82	423
Metro MG 10/80-9/90	423
Metro Van 10/80-9/90	423
MG 1/72-12/81	423
MG ZS 7/01-12/05	423
MGB GT 1/66-11/80	424
MGR V8 9/92-12/95	424
Midget 1/64-12/79	424
Mini Mk I 1/67-	424
Mini Mk I Cooper 1/67-12/91	424
Mini Mk I Van, Pick-Up 1/67-6/93	425
Montego (XE), SW 4/84-10/95	425
Princess I 4/76-9/78	425
Princess II 10/78-10/82	425
Sherpa 1/74-1/89	425
Sprite Mk II 1/62-12/70	426
Stag 1/70-12/77	426
Toledo 10/70-12/77	426
TR 4a 12/65-12/67	426
TR 5 (250) 1/67-12/68	427
TR 6 1/69-12/76	427
TR 7 1/75-12/81	427
Vitesse 1/62-12/75	427
SAAB	
90 8/84-8/87	427
900 I, SW Coupe 9/78-6/94	427
9-3 I (YS3D), Cabrio 2/98-9/02	427
9-3 II (YS3F), SW, Cabrio 9/02-12/13	427
9-5 I (YS3E), SW 9/97-4/10	427
95 SW 10/65-12/78	427
96 10/65-8/80	427
99 4/72-12/84	427
SEAT	
124 1/68-10/80	428
127 (127A) 4/72-12/82	428
128 1/76-12/80	428
131 10/74-12/86	428
132 5/73-12/82	428

MAKE - MODEL	PAGE
133 5/74-11/79	428
600 3/55-4/70	428
850 1/66-7/75	428
Alhambra I (7V8, 7V9) 4/96-9/10	429
Altea (5P1) / Altea XL 3/04-8/15	429
Arosa (6H) 5/97-12/04	430
Cordoba I (6K2/C2/6K5), Vario 2/93-6/99	431
Cordoba II (6K2/6K5), Vario 6/99-10/02	433
Cordoba III (6L2) 10/02-12/09	434
Exeo, ST (3R) 4/09-12/13	435
Ibiza I (021A) 6/84-12/93	435
Ibiza II (6K1) 3/93-8/99	436
Ibiza III (6K1) 8/99-2/02	438
Ibiza IV (6L1) 2/02-6/08	439
Ibiza V (6J5,1,8), Sportcoupe, ST SW 7/08-	441
Leon I (1M1) 11/99-9/05	442
Leon II (1P1) 9/05-12/12	443
Malaga (023A) 11/84-12/93	444
Marbella (28) 8/86-10/98	444
Mii (KF1) 10/11-	445
Panda (141A) 10/80-8/98	445
Panda Trans 10/80-12/86	445
Ritmo (138) 7/78-9/83	445
Ronda (022A) 6/82-11/88	445
Sport Coupe 1/77-1/80	446
Terra (24) 2/87-12/96	446
Toledo I (1L) 5/91-3/99	446
Toledo II (1M2) 4/99-9/04	447
Toledo III (5P2) 10/04-12/09	449
Toledo IV (KG3) 2/13-	449
SEAT LCV	
Inca (6K9) 11/95-12/03	449
Marbella (028A) Van 1/87-12/93	450
Terra (024A) Van 1/87-12/95	450
SKODA	
100 1/70-12/77	450
105 (742,744) 8/76-12/90	450
110 12/69-3/82	450
120 (742,744) 8/76-12/90	450
130 2/85-10/91	450
Citigo 10/11-	450
Fabia I (6Y2, 3, 5), SW 12/99-5/07	450
Fabia II (5J2), SW 5/07-12/14	452
Fabia III (NJ3,5), SW 1/15-	453
Favorit (781) 5/89-9/94	453
Favorit Forman (785) 8/91-6/95	454
Favorit Pick-Up (787) 12/92-6/97	454
Felicia I (6U1, 6U5), SW 10/94-3/98	454
Felicia I (797) Pick-Up 1/95-2/98	454
Felicia II (6U1, 6U5), SW 3/98-6/01	455
Octavia II (1U2, 1U5), SW 9/96-6/04	455
Octavia III (1Z3, 1Z5), SW 6/04-4/13	457
Rapid (120G, 130G, 135G) 2/83-10/91	458
Rapid II, SW (NH1, 3) 1/13-	458
Roomster (5J7) 9/06-12/15	458
Superb I (3U4) 2/02-8/08	459
Superb II (3T4, 3T5), SW 9/08-7/15	460
Yeti (5L) 9/09-	460
SKODA LCV	
Fabia Praktik 4/02-12/07	460
Roomster Van, Praktik (5J) 3/07-12/15	461

MAKE - MODEL	PAGE
SMART	
Cabrio (450) 3/00-1/04	461
City-Coupe (450) 7/98-1/04	462
Crossblade 6/02-12/03	462
Forfour I (454) 4/04-6/06	462
Fortwo I (450) 1/04-2/07	462
Fortwo II, Cabrio, Coupe (451) 3/07-3/15	462
Fortwo III, Cabrio, Coupe (453) 7/14-	463
Roadster, Coupe (452) 4/03-11/05	463
SSANGYONG	
Actyon 1/07-	463
Korando I (K4) 12/88-12/96	463
Korando II (KJ) 12/96-10/10	463
Kyron 5/05-	463
Musso (FJ) 10/95-12/05	463
Rexton I 4/02-3/14	464
Rodius I 5/05-6/13	464
SUBARU	
Forester I (SF) 8/97-9/02	464
Forester II (SG) 9/02-5/08	464
Impreza I (GC, GF), SW 8/92-12/00	464
Impreza II (GD, GG), SW 12/00-12/07	464
Impreza III (GH, GR) 1/08-6/11	464
Justy I (KAD)/ Trendy 11/84-12/94	464
Justy II (JMA, MS) 10/95-8/03	464
Justy III (G3X) 9/03-10/08	464
Justy IV (JDA) 11/08-12/10	464
Legacy I (BC, BJF), SW 1/89-7/94	464
Legacy II (BD, BG), SW 9/94-3/99	464
Legacy III (BE, BH), SW 10/98-9/03	465
Leone I (AB), SW 1/72-10/84	465
Leone II, SW 11/84-2/92	465
Loyale 1/90-1/92	465
Trezia 4/11-12/14	465
Vivio 3/92-10/95	465
SUZUKI	
Alto I (SS80) 6/82-12/85	465
Alto II (EC) 1/86-11/93	465
Alto III (EF) 9/94-6/02	465
Alto IV (FF) 6/02-12/08	465
Alto V (GF) 1/09-12/14	465
Baleno I (EG), SW 7/95-12/07	465
Celerio 1/15-	465
Grand Vitara I (FT, GT) 3/98-9/05	465
Grand Vitara II (JT) 10/05-	466
Ignis I (FH) 10/00-9/03	466
Ignis II (MH) 9/03-12/08	466
Jimny II (FJ) 9/98-	466
Kizashi (FR) 10/10-	466
Liana (ER), SW 7/01-	466
LJ 80 1/80-1/84	466
Samurai (SJ) 11/88-12/03	466
Sidekick 7/88-1/98	467
SJ 410 9/81-12/90	467
SJ 413 9/84-8/90	467
Splash 4/08-	467
Swift I (AA) 10/83-12/89	467
Swift II (AH, AJ, EA, MA) 3/89-12/03	467
Swift III (SG) 9/05-9/10	468
Swift IV (FZ, NZ) 10/10-	468
Sx4 (GY) 6/06-	468
Traker 1/91-1/98	468

MAKE - MODEL	PAGE
Vitara (ET, TA) 7/88-3/99	468
Wagon R+ I (EM) 2/93-5/00	469
Wagon R+ II (MM) 5/00-12/08	469
X-90 (EL) 9/95-12/98	469
SUZUKI LCV	
Carry I (ST90V) Van 11/80-10/85	469
Carry II (FD) Van 3/99-	469
Super Carry II (ED) Bus 10/85-3/99	469
TALBOT	
1307-1510 7/75-4/84	469
150 1/79-	470
160 1/73-3/79	470
Alpine 1/75-	470
Avenger 2/70-7/81	470
Express 1/82-1/94	470
Horizon 2/78-6/86	470
Imp 1/66-1/76	471
Rancho 1/77-7/84	471
Samba (51A) 1/81-10/86	471
Simca 10/61-12/80	471
Simca Sunbeam 7/77-3/83	472
Solara 2/80-7/86	472
Tagora 6/80-12/87	473
TATA	
Indigo, SW 1/03-	473
TOYOTA	
4 Runner I (N6) 1/84-1/88	473
4 Runner II (N13) 8/87-3/96	473
4 Runner III (N18) 11/95-12/02	473
Auris I (ZZE15) 4/07-12/12	473
Avensis I (T22), SW 9/97-3/03	473
Avensis II (T25), SW 4/03-1/09	474
Avensis III (T27), SW 2/09-	474
Avensis Verso (M20) 8/01-12/09	474
Aygo I (KGB,WNB) 10/05-4/14	474
Aygo II (PAB4,KGB4) 5/14-	474
Camry (V1)/ Vista/ Scepter 2/83-9/86	474
Camry (V2), SW 10/86-5/91	475
Carina I (TA4, TA6), SW 8/77-2/87	475
Carina II (T15) 10/83-11/87	475
Carina II (T17), SW 12/87-6/93	475
Carina III E (T19), SW 4/92-9/97	475
Celica I (TA2) 5/73-3/78	476
Celica II (TA60, RA40, RA6) 8/77-10/86	476
Celica III (T16) 8/85-8/90	477
Celica IV (T18) 10/89-1/94	477
Celica V (T20) 11/93-11/99	477
Condor 1/00-	477
Conquest 1/84-	477
Corolla I (KE, TE) 11/66-12/80	477
Corolla II (E7) 9/79-9/83	477
Corolla III (E8) 5/83-5/88	477
Corolla IV (E9), SW, Compact, Liftback 8/87-6/93	478
Corolla V (E10), SW, Compact, Liftback 7/92-4/97	478
Corolla VI (E11), SW, Compact, Liftback 4/97-1/02	479
Corolla VII (E12) Verso 1/02-5/04	479
Corolla VII (E12, E15), SW 1/02-12/13	479
Corolla VIII Verso (R1) 4/04-12/09	480
Corona I (RX, RT) 12/75-1/81	480
Cressida II (RX3), SW 7/77-7/81	480
Cressida III (X6), SW 9/80-3/85	480
Cressida IV (X7), SW 3/85-1/88	480

MAKE - MODEL	PAGE
Cressida V (X8), SW 1/88-1/93	480
Crown I (S1) 1/61-12/94	481
iQ (AJ1) 3/09-12/14	481
Land Cruiser I (J4), Pick-Up 3/69-4/86	481
Land Cruiser II (J6) 10/81-12/89	481
Land Cruiser III (J7) 11/84-	481
Paseo II (EL54) 8/95-7/99	481
Previa I (TCR1, 2) 5/90-8/00	481
Previa II (ACR3) 8/00-12/05	481
Prius I (NHW11) 5/00-1/04	481
Rav 4 I (XA1) 6/94-6/00	481
Rav 4 II (XA2) 6/00-2/06	481
Starlet II (P6) 2/78-9/84	481
Starlet III (P7) 10/84-12/89	481
Starlet IV (P8) 12/89-3/96	482
Starlet V (P9) 4/96-3/99	482
Tercel I (L1, L2) 3/79-4/86	482
Trueno 8/74-12/80	482
Urban Cruiser 6/09-12/14	482
Verso-S 6/11-	482
Yaris I (CP10)/ Vitz/Platz 4/99-12/05	482
Yaris I (NC/LP2) Verso 11/99-12/05	483
Yaris II (C/SP9) 1/06-9/11	483
Yaris III (P13) 10/11-	483

TOYOTA LCV

Dyna I 100 8/77-12/89	483
Dyna I 150 8/77-12/89	483
Dyna IV (KD, LY) 8/01-	483
Hiace I (H) 2/77-12/84	483
Hiace II (H5) 3/83-11/89	483
Hiace III (H10) 8/89-8/95	483
Hiace IV (H1, H2) 8/95-12/04	484
Hiace V 1/05-	484
Hilux I (N) 1/72-1/89	484
Hilux II (N) Pick-Up 1/84-7/05	484
Hilux III Pick-up 1/05-4/15	484
Liteace I 10/79-1/98	484
Modell F (R2, 31) Bus 11/82-1/90	484
Pick-Up 1/75-	484
Proace I 6/13-12/15	484
T100 1/93-1/98	485
Vanwagon 1/83-12/91	485

VOLKSWAGEN

147 1/66-7/74	485
1500,1600 (31, 36), Variant 4/61-7/73	485
181 9/69-2/79	485
Bora (1J2, 1J6), Variant 10/98-12/04	485
Corrado (53I) 9/88-12/95	487
Dasher 1/73-1/81	487
Derby I (86) 2/77-12/81	487
Derby II (86C, 80) 8/81-12/88	488
Eos I 3/06-10/13	488
Fox 1/87-1/91	488
Fox (5Z1) 4/05-12/11	489
Golf I (17, 155) 4/74-4/93	489
Golf II (19E, 1G1) 8/83-12/92	490
Golf III (1H1) 10/91-4/99	493
Golf III (1H5) Variant 10/91-4/99	497
Golf IV (1J1, 5), Variant 8/97-9/03	499
Golf V (1K1), Variant 10/03-12/08	501
Golf V Plus (1KP) 1/05-12/08	502
Golf VI (517) Cabrio 3/11-	503
Golf VI (5K1), Variant 10/08-10/12	503
Golf VI Plus (5M1) 1/09-4/14	504
Golf VII (5G1, BA5), Variant 11/12-	504
Jetta I (17) 8/79-12/83	504
Jetta II (19E, 1G2) 1/84-12/91	505
Jetta III (1KM) 8/05-1/11	507
Jetta IV (162) 2/11-	507
K 70 (48) 8/70-10/74	507
Kaefer 4/49-7/03	507
Karmann Ghia (14, 34) 1/60-7/74	508
Lupo (6X1, 6E1) 9/98-12/05	508
Maggiolino, Cabrio (5C1, 5C7) 10/11-	509
New Beetle (9C1, 1C1) 1/98-9/11	509
Passat I (32, 33), Variant 5/73-7/80	511
Passat II (32B), Variant 8/80-3/88	512
Passat III (3A2, 3A5, 35I), Variant 2/88-5/97	513
Passat IV (3B2, 3B5), Variant 8/96-11/00	515
Passat V (3B3, 3B6), Variant 11/00-3/05	518
Passat VI (3C2, 3C5), Variant 3/05-12/10	520
Passat VII Coupe CC (357, 358) 6/08-	520
Passat VII, Variant, Alltrack (362, 365) 8/10-8/14	521
Polo I (86) 3/75-9/81	521
Polo II (86C, 80), Classic, Coupe 10/81-9/94	521
Polo III (6N1) 10/94-10/99	523
Polo III-IV (6KV2) Classic 11/95-9/01	524
Polo IV (6KV5) Variant 5/97-9/01	525
Polo IV (6N2) 10/99-9/01	526
Polo V (9N) 10/01-6/09	528
Polo VI (6R/C) 7/09-	530
Quantum I 1/85-7/90	530
Rabbit 1/74-1/76	530
Santana I (32, 33), Variant 5/73-7/80	530
Santana II (32B) 8/81-12/84	531
Scirocco I (53) 2/74-7/80	532
Scirocco II (53B) 8/80-7/92	533
Scirocco III (137,138) 10/08-	534
Sharan I (7M8, 7M9) 9/95-9/10	534
Touareg I (7LA) 10/02-4/10	535
Touran I (1T1, 1T2, 1T3) 2/03-8/15	535
Up 1/12-	535
Vento (1H2) 11/91-9/98	535

VOLKSWAGEN LCV

Amarok 10/10-	537
Caddy I (14) 8/82-7/92	537
Caddy II (9K9) 11/95-1/04	538
Caddy II (9U7) Pick-Up 11/95-2/04	538
Caddy III (2KA, KB) 3/04-4/15	539
Crafter (2E) 4/06-	540
Fox Van II 4/05-12/11	540
LT I 28-35 (281-363) 4/75-6/96	540
LT I 40-55 (291-293-512-909) 4/75-6/96	540
LT II 28-46 (2DX0AE, FE, 2DM) 5/96-7/06	540
Multivan V (7HM) 4/03-3/15	541
Polo Van I (86CF) 1/81-9/94	542
Polo Van II (6NF) 10/94-10/99	542
Taro 4/89-3/97	542
Transporter II 8/67-7/79	542
Transporter III 5/79-7/92	542
Transporter IV (70XA/B/C/D, DB, 7DW) 7/90-3/03	543
Transporter V (7HA/B/H/J, JD/E/L) 4/03-3/15	546
Vanagon 1/72-1/87	546

VOLVO

140 (142, 144, 145), SW 8/66-8/75	546
240 (P242, 244, 245), SW 8/74-8/93	546
260 (P262, 264, 265), SW 8/74-7/82	547
340-360 (343, 345, 344) 8/75-7/91	547
440 K (445) 8/88-12/96	547
460 L (464) 9/88-7/96	547
480 E 4/86-7/96	548
66, SW 10/75-11/79	548
740 (744, 745) 8/83-8/92	548
740 (744, 745) SW 8/84-8/92	548
760 (704, 764, 765) 8/81-7/92	548
760 (704, 764, 765) SW 8/81-7/92	548
850 (LS, LW), SW 6/91-12/96	549
940 I (944, 945), SW 8/90-7/95	549
940 II (944, 945), SW 8/94-10/98	549
960 I (964, 965), SW 8/90-7/94	549
960 II (964, 965), SW 7/94-12/96	549
C70 I Coupe, Cabrio 3/97-2/06	549
P 121 5/59-5/71	550
P 122 S Amazon 5/59-5/71	550
P 123 11/68-5/71	550
P 131 11/64-5/71	550
P 132 S 11/64-5/71	550
P 133 11/64-5/71	550
P 1800 (182) 4/62-11/73	550
P 1800 (183) 4/62-11/73	550
P 2200 SW 9/64-8/70	550
S40 I / V40 (VW, VS) 7/95-1/04	550
S60 I 11/00-3/10	551
S70 1/97-11/00	551
S80 I (TS, XY) 5/98-7/06	552
S90 1/97-5/98	552
V70 I SW (LV) 1/97-3/00	552
V70 II SW (SW) 3/00-6/07	553
XC70 I Cross Country 9/00-6/07	553

ZASTAVA

101 (1100) 6/73-12/93	553
1300 - 1500 1/78-1/87	554
Contact 1/78-1/83	554
Koral 1/90-11/08	554
Nogaro 1/80-1/83	554
Tempo 1/91-1/92	554
Yugo 45/55/65 4/80-6/95	554
Yugo 750 1/82-	554
Yugo Florida 10/88-12/08	554

ABARTH

		Spare Parts	F/R	L/R	FRITECH ref.		DIMENSIONS mm.	NOTE
500 II, C (150, 312) 7/07-								
1.4 Abarth Eng.198A7.000 (103kW)	5/10-		R		**CF866**	Loc	Ø 20,64	Alu, +ABS, +ESP
	08-				**PF704**	Trw	Ø 22,20	Alu, +ABS
1.4 Abarth Eng.312A3.000 (132kW)	08-				**PF704**	Trw	Ø 22,20	Alu
1.4 Abarth, Cabrio Eng.312A1.000 (118kW)	10-				**PF704**	Trw	Ø 22,20	Alu, +ABS
1.4 Abarth, Cabrio Eng.312A1.000 (99kW)	5/10-		R		**CF866**	Loc	Ø 20,64	Alu, +ABS, +ESP
	08-				**PF704**	Trw	Ø 22,20	Alu, +ABS
595, Cabrio 9/12-								
1.4 T-Jet Eng.312A1000 (118kW)	12-				**PF704**	Trw	Ø 22,20	Alu
Grande Punto IV (199) 9/05-1/12								
1.4 Abarth Eng.199A8.000 (114kW)	07-				**PF858**	Bch	Ø 23,81	Alu
Punto Evo (199) 10/09-12/12								
1.4 Abarth Eng.199A8.000/ 955A8.000 (132kW)	08-12				**PF858**	Bch	Ø 23,81	Alu
	08-12				**PZ146**	Fte	Ø 15,87	Alu
1.4 Abarth Eng.955A8.000 (120kW)	09-				**PF858**	Bch	Ø 23,81	Alu
	09-				**PZ146**	Fte	Ø 15,87	Alu

ALFA ROMEO

145, 146 (930) 7/94-1/01								
1.4 i.e. Eng.AR33501 (66kW)	-12/96		R		**CF135**	Bdx	Ø 20,64	Vett -3102206
	-12/96		R		**CF132**	Bdx	Ø 22,00	Vett 3102207-
	94-12/96				**PF042**	Bdx	Ø 22,20	Supplied -Servo
	9/94-12/96				**CZ008**		Ø 25,40	
	9/94-9/95				**PZ033**		Ø 19,05	
1.4 i.e. 16v T.S. Eng.AR33503/ AR38501 (76kW)	-12/96		R		**CF130**	Bdx	Ø 22,00	
	1/97-				**PF042**	Bdx	Ø 22,20	Supplied -Servo
	12/96-				**CZ024**		Ø 25,40	
	12/96-2/99				**PZ034**		Ø 19,05	
1.6 i.e. Eng.AR33201 (76kW)	-12/96		R		**CF135**	Bdx	Ø 20,64	Vett -3102206
	-12/96		R		**CF132**	Bdx	Ø 22,00	Vett 3102207-
	94-12/96				**PF042**	Bdx	Ø 22,20	Supplied -Servo
	9/94-12/96				**CZ008**		Ø 25,40	
	9/94-9/95				**PZ033**		Ø 19,05	
1.6 i.e. 16v T.S. Eng.AR38201/ AR67601 (88kW)	-12/96		R		**CF130**	Bdx	Ø 22,00	
	1/97-				**PF042**	Bdx	Ø 22,20	Supplied -Servo
	12/96-				**CZ024**		Ø 25,40	
	12/96-2/99				**PZ034**		Ø 19,05	
1.7 i.e. 16v Eng.AR33401 (95kW)	9/94-12/96				**PF042**	Bdx	Ø 22,20	Supplied -Servo
	9/94-12/96				**CZ008**		Ø 25,40	
	9/94-9/95				**PZ033**		Ø 19,05	
1.8 T.S. 16v Eng.AR32201 (106kW)	98-				**PF042**	Bdx	Ø 22,20	Supplied -Servo
1.8 T.S. 16v Eng.AR32205/ AR38401/ AR67106	1/97-				**PF042**	Bdx	Ø 22,20	Supplied -Servo
(103kW)	12/96-				**CZ024**		Ø 25,40	
	12/96-2/99				**PZ034**		Ø 19,05	
1.9 JTD Eng.AR32302 (77kW)	99-01		R		**CF130**	Bdx	Ø 22,00	
	99-01				**PF042**	Bdx	Ø 22,20	Supplied -Servo
	99-01				**CZ023**		Ø 25,40	
1.9 TD Eng.AR33601/ AR67501 (66kW)	-12/96		R		**CF135**	Bdx	Ø 20,64	Vett -3102206
	-12/96		R		**CF132**	Bdx	Ø 22,00	Vett 3102207-
	-12/96		R		**CF130**	Bdx	Ø 22,00	
	4/94-99				**PF042**	Bdx	Ø 22,20	Supplied -Servo
	94-2/99				**CZ024**		Ø 25,40	
	94-2/99				**PZ034**		Ø 19,05	
2.0 16v T.S. Eng.AR16201/ AR32310/ AR67204	11/95-				**PF042**	Bdx	Ø 22,20	Supplied -Servo
(110kW)	95-				**CZ024**		Ø 25,40	
	95-2/99				**PZ034**		Ø 19,05	
2.0 16v T.S. Eng.AR32301 (114kW)	98-				**PF042**	Bdx	Ø 22,20	Supplied -Servo
147 (937) 1/01-1/10								
1.6 16v T.S. Eng.AR32104 (88kW)	01-6/02				**PF239**	Luc	Ø 22,20	Alu, -VDC
	01-6/02				**PF240**	Luc	Ø 22,20	Alu, +VDC
	7/02-				**PF505**	Luc	Ø 22,20	Alu, -VDC
	01-				**PZ073**	Valeo	Ø 15,87	
1.6 16v T.S. ECO Eng.AR37203 (77kW)	01-6/02				**PF239**	Luc	Ø 22,20	Alu, -VDC
	01-6/02				**PF240**	Luc	Ø 22,20	Alu, +VDC

ALFA ROMEO

		Spare Parts	F/R	L/R	FRITECH ref.		DIMENSIONS mm.	NOTE
1.6 16v T.S. ECO Eng.AR37203 (77kW)	7/02-				**PF505**	Luc	Ø 22,20	Alu, -VDC
	01-				**PZ073**	Valeo	Ø 15,87	
1.9 JTD Eng.182B9.000 (74kW)	03-				**PF239**	Luc	Ø 22,20	Alu, +VDC
	03-				**PF505**	Luc	Ø 22,20	Alu, -VDC
	03-				**PZ073**	Valeo	Ø 15,87	
1.9 JTD Eng.937A2.000 (85kW)	01-				**PF239**	Luc	Ø 22,20	Alu, -VDC
	01-6/02				**PF240**	Luc	Ø 22,20	Alu, +VDC
	7/02-				**PF505**	Luc	Ø 22,20	Alu, -VDC
	01-				**CZ071**	Bch	Ø 20,64	
	01-				**PZ073**	Valeo	Ø 15,87	
1.9 JTD Eng.937A5.000 (110kW)	05-				**PF239**	Luc	Ø 22,20	Alu, +VDC
	05-				**PF505**	Luc	Ø 22,20	Alu, -VDC
	05-				**CZ071**	Bch	Ø 20,64	
	05-				**PZ073**	Valeo	Ø 15,87	
1.9 JTD 16v Eng.192A5.000 (103kW)	-6/02				**PF239**	Luc	Ø 22,20	Alu, -VDC
	-6/02				**PF240**	Luc	Ø 22,20	Alu, +VDC
	7/02-				**PF505**	Luc	Ø 22,20	Alu, -VDC
	02-				**CZ071**	Bch	Ø 20,64	
	02-				**PZ073**	Valeo	Ø 15,87	
1.9 JTD 16v BELGIO Eng.192B1.000 (100kW)	01-				**PF239**	Luc	Ø 22,20	Alu, -VDC
	01-6/02				**PF240**	Luc	Ø 22,20	Alu, +VDC
	7/02-				**PF505**	Luc	Ø 22,20	Alu, -VDC
	01-				**CZ071**	Bch	Ø 20,64	
	01-				**PZ073**	Valeo	Ø 15,87	
1.9 JTD 16v FRANCIA Eng.937A4.000 (93kW)	01-				**PF239**	Luc	Ø 22,20	Vett 3176842-, Alu, +ESP
	01-				**PF240**	Luc	Ø 22,20	Vett -3176842, Alu, +ESP
	01-				**PF505**	Luc	Ø 22,20	Vett -3176842, Alu, -VDC
	01-				**CZ071**	Bch	Ø 20,64	
	01-				**PZ073**	Valeo	Ø 15,87	
1.9 JTDM Eng.937A6.000 (125kW)	08-				**PF239**	Luc	Ø 22,20	Vett 3176842-, Alu, +ESP
	08-				**PF240**	Luc	Ø 22,20	Vett -3176842, Alu
	08-				**PF505**	Luc	Ø 22,20	Vett -3176842, Alu, -VDC
	08-				**PZ073**	Valeo	Ø 15,87	
1.9 JTDM 8v Eng.937A3.000 (88kW)	05-				**PF239**	Luc	Ø 22,20	Alu, +VDC
	05-				**PF505**	Luc	Ø 22,20	Alu, -VDC
	05-				**PZ073**	Valeo	Ø 15,87	
2.0 16v T.S. Eng.AR32310 (110kW)	01-6/02				**PF239**	Luc	Ø 22,20	Alu, -VDC
	01-6/02				**PF240**	Luc	Ø 22,20	Alu, +VDC
	7/02-				**PF505**	Luc	Ø 22,20	Alu, -VDC
	01-				**PZ073**	Valeo	Ø 15,87	
3.2 GTA Eng.932A.000 (184kW)	03-				**PF239**	Luc	Ø 22,20	Vett 3176842-, Alu, +ESP
	03-				**PF240**	Luc	Ø 22,20	Vett -3176842, Alu
	03-				**PF505**	Luc	Ø 22,20	Vett -3176842, Alu, -VDC
	03-				**CZ071**	Bch	Ø 20,64	
155 (167) 1/92-1/98								
1.6 16v T.S. Eng.AR67601 (88kW)	96-				**PF042**	Bdx	Ø 22,20	Supplied -Servo
	96-				**CZ024**		Ø 25,40	
	96-				**PZ034**		Ø 19,05	
1.7 T.S. Eng.AR67103 (83kW)	93-				**PF042**	Bdx	Ø 22,20	Supplied -Servo
	93-				**CZ035**		Ø 25,40	Ch -0075933
	93-				**CZ024**		Ø 25,40	
	93-				**PZ034**		Ø 19,05	
1.7 T.S. Eng.AR67105 (85kW)	93-				**PF042**	Bdx	Ø 22,20	Supplied -Servo
	93-				**CZ035**		Ø 25,40	Ch -0075933
	93-				**CZ024**		Ø 25,40	
	93-				**PZ034**		Ø 19,05	
1.7 T.S. 16v Eng.AR67106 (103kW)	96-97				**PF042**	Bdx	Ø 22,20	Supplied -Servo
	96-				**CZ035**		Ø 25,40	Ch -0075933
	96-97				**CZ024**		Ø 25,40	
	96-97				**PZ034**		Ø 19,05	
1.8 T.S. Eng.AR67101 (95kW)	92-93				**PF042**	Bdx	Ø 22,20	Supplied -Servo
	92-93				**CZ035**		Ø 25,40	Ch -0075933
1.8 T.S. Eng.AR67402 (77kW)	92-97				**PF042**	Bdx	Ø 22,20	Supplied -Servo
	92-97				**CZ035**		Ø 25,40	Ch -0075933

		Spare Parts	F/R	L/R	FRITECH ref.		DIMENSIONS mm.	NOTE
1.8 T.S. Sport Eng.AR67101/ AR67102 (93kW)	92-				**PF042**	Bdx	Ø 22,20	Supplied -Servo
	92-				**CZ035**		Ø 25,40	Ch -0075933
1.9 TD Eng.AR67501 (66kW)	93-97				**PF042**	Bdx	Ø 22,20	Supplied -Servo
	93-97				**CZ024**		Ø 25,40	
	93-97				**PZ034**		Ø 19,05	
2.0 16v T. Q4 Eng.AR67203 (137kW)	92-97				**PF042**	Bdx	Ø 22,20	Supplied -Servo
	92-97				**CZ023**		Ø 25,40	
2.0 16v T. Q4 Eng.AR67203 (140kW)	92-97				**PF042**	Bdx	Ø 22,20	Supplied -Servo
	92-97				**CZ023**		Ø 25,40	
2.0 T.S. Eng.AR67201 (106kW)	92-93				**PF042**	Bdx	Ø 22,20	Supplied -Servo
	92-93				**CZ035**		Ø 25,40	Ch -0075933
2.0 T.S. Eng.AR67202 (104kW)	92-95				**PF042**	Bdx	Ø 22,20	Supplied -Servo
	92-95				**CZ035**		Ø 25,40	Ch -0075933
2.0 T.S. 16v Eng.AR67204 (110kW)	3/95-				**PF042**	Bdx	Ø 22,20	Supplied -Servo
	3/95-				**CZ035**		Ø 25,40	Ch -0075933
	3/95-				**CZ024**		Ø 25,40	
	3/95-				**PZ034**		Ø 19,05	
2.5 TD Eng.VM07B (92kW)	93-				**PF042**	Bdx	Ø 22,20	Supplied -Servo
	93-				**CZ023**		Ø 25,40	
	93-				**PZ034**		Ø 19,05	
2.5 TD Eng.VM31B (92kW)	93-				**PF042**	Bdx	Ø 22,20	Supplied -Servo
	93-				**CZ023**		Ø 25,40	
	93-				**PZ034**		Ø 19,05	
2.5 V6 Eng.AR67301 (121kW)	92-96				**PF042**	Bdx	Ø 22,20	Supplied -Servo
	6/95-				**CZ023**		Ø 25,40	
	92-6/95				**CZ008**		Ø 25,40	
2.5 V6 Eng.AR67302/ AR67303 (120kW)	92-97				**PF042**	Bdx	Ø 22,20	Supplied -Servo
	92-6/95				**CZ008**		Ø 25,40	
	95-97				**CZ023**		Ø 25,40	
156 (932), Sportwagon 9/97-9/05								
1.6 16v T.S. Eng.AR32104/ AR32103/ AR32102/	97-				**PF795**	Bch	Ø 20,64	Vett 0123688-, Supplied -Servo
AR67601 (88kW)	02-				**PF322**	Bch	Ø 20,64	Alu
	97-				**PF246**		Ø 20,64	Vett -0123688, Supplied -Servo
	97-05				**PZ068**	Valeo	Ø 15,87	LHD
1.8 T.S. 16v Eng.AR32201 (106kW)	97-				**PF795**	Bch	Ø 20,64	Vett 0118362-, Supplied -Servo
	97-				**PF246**		Ø 20,64	Vett -0118361, Supplied -Servo
	97-00				**PZ068**	Valeo	Ø 15,87	LHD
1.8 T.S. 16v Eng.AR32205 (103kW)	00-				**PF322**	Bch	Ø 20,64	Alu
	00-05				**PZ068**	Valeo	Ø 15,87	LHD
1.9 D Eng.192B1.000 (100kW)	02-04				**PF323**	Bch	Ø 22,20	Alu
1.9 JTD Eng.937A2.000 (85kW)	1/02-				**PF322**	Bch	Ø 20,64	Alu
	01-05				**PZ032**		Ø 19,05	
1.9 JTD Eng.AR32302 (77kW)	97-				**PF795**	Bch	Ø 20,64	Vett 0123409-, Supplied -Servo
	97-				**PF246**		Ø 20,64	Vett -0123408, Supplied -Servo
	97-00				**CZ023**		Ø 25,40	
	97-00				**PZ032**		Ø 19,05	
1.9 JTD Eng.AR37101 (81kW)	10/00-				**PF795**	Bch	Ø 20,64	Vett 0123409-, Supplied -Servo
	10/00-				**PF246**		Ø 20,64	Vett -0123408, Supplied -Servo
	10/00-				**CZ023**		Ø 25,40	
1.9 JTD 16v Eng.192A5.000 (103kW)	02-				**PF323**	Bch	Ø 22,20	Alu
	02-				**CZ023**		Ø 25,40	
	02-04				**PZ032**		Ø 19,05	
1.9 JTD, Crosswagon Eng.937A5.000 (110kW)	04-				**PF323**	Bch	Ø 22,20	Alu
2.0 16v T.S. Eng.AR32301 (114kW)	97-00				**PF795**	Bch	Ø 20,64	Vett 0118362-, Supplied -Servo
	97-00				**PF246**		Ø 20,64	Vett -0118361, Exc. Selespeed, Supplied -Servo
	97-00				**PZ068**	Valeo	Ø 15,87	LHD
2.0 16v T.S. Eng.AR32310 (110kW)	00-02				**PF246**		Ø 20,64	Vett -0118361, Exc. Selespeed, Supplied -Servo
	00-02				**PZ068**	Valeo	Ø 15,87	LHD
2.0 JTS Eng.937A1.000 (121kW)	3/02-				**PF323**	Bch	Ø 22,20	Alu
	02-05				**PZ068**	Valeo	Ø 15,87	LHD
2.0 SW Eng.932A2.000 (119kW)	02-06				**PF323**	Bch	Ø 22,20	Alu
2.0 Twin Spark Eng.AR32303 (118kW)	97-00				**PZ068**	Valeo	Ø 15,87	LHD
2.4 JTD Eng.839A6.000 (103kW)	10/00-				**PF246**		Ø 20,64	Vett -0125683, Supplied -Servo
	10/00-				**CZ023**		Ø 25,40	

ALFA ROMEO

		Spare Parts	F/R	L/R	FRITECH ref.		DIMENSIONS mm.	NOTE
2.4 JTD Eng.839A6.000 (103kW)	00-02				**PZ032**		Ø 19,05	
2.4 JTD Eng.841C.000 (110kW)	3/02-				**PF322**	Bch	Ø 20,64	Alu, RHD
	3/02-				**PF323**	Bch	Ø 22,20	Alu, LHD
	02-				**CZ023**		Ø 25,40	
	02-5/03				**PZ032**		Ø 19,05	
2.4 JTD Eng.AR32501 (100kW)	97-				**PF795**	Bch	Ø 20,64	Vett 0125684-, Supplied -Servo
	97-				**PF246**		Ø 20,64	Vett -0125683, Supplied -Servo
	97-00				**CZ023**		Ø 25,40	
	97-00				**PZ032**		Ø 19,05	
2.4 JTD 20v Eng.841G.000 (129kW)	10/03-				**PF323**	Bch	Ø 22,20	Alu
	03-05				**PZ068**	Valeo	Ø 15,87	LHD
2.5 V6 24v Eng.AR32401 (140kW)	97-				**PF246**		Ø 20,64	Vett -0129416, Supplied -Servo
	10/97-				**CZ023**		Ø 25,40	
2.5 V6 24v Eng.AR32405 (141kW)	00-				**PF795**	Bch	Ø 20,64	Vett 0129417-, Supplied -Servo
	1/02-				**PF322**	Bch	Ø 20,64	Alu, M/T, RHD
	01-				**PF323**	Bch	Ø 22,20	Alu, LHD
	00-				**PF246**		Ø 20,64	Vett -0129416, Supplied -Servo
	00-				**CZ023**		Ø 25,40	
	00-04				**PZ032**		Ø 19,05	
3.2 GTA Eng.932A.000 (184kW)	02-05				**PZ032**		Ø 19,05	
159, Sportwagon (140) 9/05-11/11								
1.8 16v Eng.939A4.000 (103kW)	05-				**PF520**	Trw	Ø 25,40	Alu, +ABS, -VDC, LHD
	05-8/06				**PF521**	Trw	Ø 25,40	Alu, +ABS, +VDC
1.8 TBi Eng.939B1.000 (147kW)	09-				**PF520**	Trw	Ø 25,40	Alu, +ABS, -ESP, -VDC, LHD
1.9 JTDM 16v Eng.939A2.000 (110kW)	05-				**PF520**	Trw	Ø 25,40	Alu, +ABS, -VDC, LHD
	05-8/06				**PF521**	Trw	Ø 25,40	Alu, +ABS, +VDC
1.9 JTDM 16v (Belgio) Eng.937A8.000 (100kW)	05-8/06				**PF521**	Trw	Ø 25,40	Alu, +ABS, +VDC
1.9 JTDM 8v Eng.939A1.000 (88kW)	05-				**PF520**	Trw	Ø 25,40	Alu, +ABS, -VDC, LHD
	05-8/06				**PF521**	Trw	Ø 25,40	Alu, +ABS, +VDC
1.9 JTDM 8v (Belgio) Eng.937A7.000 (85kW)	05-8/06				**PF521**	Trw	Ø 25,40	Alu, +ABS, +VDC
1.9 JTS Eng.939A6.000 (118kW)	05-				**PF520**	Trw	Ø 25,40	Alu, +ABS, -VDC, LHD
	05-8/06				**PF521**	Trw	Ø 25,40	Alu, +ABS, +VDC
2.0 JTDM Eng.844A2.000 (120kW)	09-				**PF520**	Trw	Ø 25,40	Alu
2.0 JTDM Eng.939B3.000 (125kW)	09-				**PF520**	Trw	Ø 25,40	Alu, +ABS, -ESP, -VDC, LHD
2.0 JTDM Eng.940A8.000 (100kW)	10-				**PF520**	Trw	Ø 25,40	Alu
2.2 JTS Eng.939A5.000 (136kW)	05-				**PF520**	Trw	Ø 25,40	Alu, +ABS, -VDC, LHD
	05-8/06				**PF521**	Trw	Ø 25,40	Alu, +ABS, +VDC
2.4 JTD 20v Eng.939A3.000 (147kW)	05-				**PF520**	Tr	Ø 25,40	Alu, +ABS, -VDC, LHD
	05-8/06				**PF521**	Trw	Ø 25,40	Alu, +ABS, +VDC
2.4 JTD 20v, Q4 Eng.939A9.000 (154kW)	07-				**PF520**	Trw	Ø 25,40	Alu, +ABS, -ESP, -VDC, LHD
3.2 JTS, Q4 Eng.939A0.000 (191kW)	05-				**PF520**	Trw	Ø 25,40	Alu, +ABS, -VDC, LHD
	05-8/06				**PF521**	Trw	Ø 25,40	Alu, +ABS, +VDC
164 (164/168) 6/87-9/98								
2.0 T.S. Eng.AR06416 (105kW)	-92				**CZ030**		Ø 23,81	Ch 6322918-
	87-92				**PZ025**		Ø 19,05	
2.0 T.S. Eng.AR64103 (106kW)	92-98				**PF091**		Ø 22,20	Alu
	-98				**CZ030**		Ø 23,81	Ch 6322918-
	95-98				**PZ025**		Ø 19,05	
2.0 V6 T. Eng.AR64101 (150kW)	91-92				**PF091**		Ø 22,20	Alu
	91-92				**CZ023**		Ø 25,40	
	91-92				**PZ025**		Ø 19,05	
2.0 V6 T. Eng.AR64102 (148kW)	92-98				**PF091**		Ø 22,20	Alu
	6/95-98				**CZ023**		Ø 25,40	
	92-98				**PZ025**		Ø 19,05	
2.5 TD Eng.VM08B/ VM32B (92kW)	92-98				**PF091**		Ø 22,20	Alu
	6/95-98				**CZ023**		Ø 25,40	
	92-98				**PZ025**		Ø 19,05	
3.0 V6 Eng.AR61501 (150kW)	6/87-92				**PF091**		Ø 22,20	Alu
	87-92				**CZ023**		Ø 25,40	
	87-92				**PZ025**		Ø 19,05	
3.0 V6 Eng.AR64305/ AR66303 (132kW)	92-98				**PF091**		Ø 22,20	Alu
	-98				**CZ030**		Ø 23,81	Ch 6322918-
	92-98				**PZ025**		Ø 19,05	

		Spare Parts	F/R	L/R	FRITECH ref.		DIMENSIONS mm.	NOTE
3.0 V6 USA Eng.AR06412 (135kW)	6/87-92				**PF091**		Ø 22,20	Alu
	-92				**CZ030**		Ø 23,81	Ch 6322918-
	87-92				**PZ025**		Ø 19,05	
166 (936) 9/98-12/07								
2.0 T.S. Eng.AR34103 (114kW)	98-00				**PF527**	Luc	Ø 25,40	Alu, +ABS, -VDC
	98-00				**PF591**	Luc	Ø 25,40	Alu, +ABS, +VDC
	98-00				**CZ023**		Ø 25,40	
	98-00				**PZ070**	Bch	Ø 19,05	
2.0 T.S. Eng.AR36301 (110kW)	00-				**PF527**	Luc	Ø 25,40	Alu, +ABS, -VDC
	00-				**PF605**	Luc	Ø 25,40	Alu, +ABS, +VDC
	00-12/07				**PZ070**	Bch	Ø 19,05	
2.0 V6 Eng.AR34102 (151kW)	00-				**PF605**	Luc	Ø 25,40	Alu, +ABS, +VDC
	98-00				**PF527**	Luc	Ø 25,40	Alu, +ABS, -VDC
	98-00				**PF591**	Luc	Ø 25,40	Alu, +ABS, +VDC
	98-00				**CZ023**		Ø 25,40	
	98-12/07				**PZ070**	Bch	Ø 19,05	
2.4 JTD Eng.839A6.000 (103kW)	00-				**PF527**	Luc	Ø 25,40	Alu, +ABS, -VDC
	00-				**PF605**	Luc	Ø 25,40	Alu, +ABS, +VDC
	00-12/07				**PZ070**	Bch	Ø 19,05	
2.4 JTD Eng.841C.000 (110kW)	02-				**PF527**	Luc	Ø 25,40	Alu, +ABS, -VDC
	02-				**PF605**	Luc	Ø 25,40	Alu, +ABS, +VDC
	02-12/07				**PZ070**	Bch	Ø 19,05	
2.4 JTD Eng.AR34202 (100kW)	98-00				**PF527**	Luc	Ø 25,40	Alu, +ABS, -VDC
	98-00				**PF591**	Luc	Ø 25,40	Alu, +ABS, +VDC
	98-00				**CZ023**		Ø 25,40	
	98-00				**PZ070**	Bch	Ø 19,05	
2.4 JTD 20v Eng.841G.000 (129kW)	03-				**PF527**	Luc	Ø 25,40	Alu, +ABS, -VDC
	03-				**PF605**	Luc	Ø 25,40	Alu, +ABS, +VDC
	03-12/07				**PZ070**	Bch	Ø 19,05	
2.4 MJT 20v Eng.841N.000 (136kW)	06-				**PF527**	Luc	Ø 25,40	Alu, +ABS, -VDC
	06-				**PF605**	Luc	Ø 25,40	Alu, +ABS, +VDC
2.4 MJT 20v Eng.936B.000 (132kW)	06-				**PF527**	Luc	Ø 25,40	Alu, +ABS, -VDC
2.5 V6 24v Eng.AR34201 (140kW)	98-00				**PF527**	Luc	Ø 25,40	Alu, +ABS, -VDC
	98-00				**PF591**	Luc	Ø 25,40	Alu, +ABS, +VDC
	98-00				**CZ023**		Ø 25,40	
	98-00				**PZ070**	Bch	Ø 19,05	
2.5 V6 24v Eng.AR36201 (138kW)	00-				**PF527**	Luc	Ø 25,40	Alu, +ABS, -VDC
	00-				**PF605**	Luc	Ø 25,40	Alu, +ABS, +VDC
	00-12/07				**PZ070**	Bch	Ø 19,05	
3.0 V6 24v Eng.AR34301 (166kW)	98-00				**PF527**	Luc	Ø 25,40	Alu, +ABS, -VDC
	98-00				**PF591**	Luc	Ø 25,40	Alu, +ABS, +VDC
	98-00				**CZ023**		Ø 25,40	
	98-00				**PZ070**	Bch	Ø 19,05	
3.0 V6 24v Eng.AR36101 (162kW)	00-				**PF527**	Luc	Ø 25,40	Alu, +ABS, -VDC
	00-				**PF605**	Luc	Ø 25,40	Alu, +ABS, +VDC
	00-12/07				**PZ070**	Bch	Ø 19,05	
3.2 V6 24v Eng.936A6.000 (176kW)	03-				**PF527**	Luc	Ø 25,40	Alu, +ABS, -VDC
	03-				**PF605**	Luc	Ø 25,40	Alu, +ABS, +VDC
	03-12/07				**PZ070**	Bch	Ø 19,05	
1750-2000 3/68-12/83								
1750 Eng.AR00548 (83kW)	68-72				**PF116**		Ø 22,20	
2000 Eng.AR10520 (97kW)	71-79				**PF116**		Ø 22,20	
33 I (905,A), Sportwagon 5/83-12/89								
1.2 (Exc. SW) Eng.AR30585 (50kW)	4/88-89		R	L	**CF129**		Ø 17,46	
	5/83-3/88		R	L	**CF110**		Ø 17,46	Exc. SW
	4/88-89		R	R	**CF128**		Ø 17,46	
	5/83-3/88		R	R	**CF111**		Ø 17,46	Exc. SW
	4/88-89				**PF030**		Ø 20,64	
	5/83-8/84				**PF138**		Ø 20,64	Exc. SW
	9/84-3/88				**PF117**		Ø 20,64	Exc. SW
	5/83-				**CZ008**		Ø 25,40	
	5/83-				**PZ013**		Ø 19,05	
1.3 (Exc. SW) Eng.AR30168/ AR30587 (63kW)	4/88-89		R	L	**CF129**		Ø 17,46	
	84-3/88		R	L	**CF110**		Ø 17,46	Exc. SW

ALFA ROMEO

		Spare Parts	F/R	L/R	FRITECH ref.		DIMENSIONS mm.	NOTE
1.3 (Exc. SW) Eng.AR30168/ AR30587 (63kW)	4/88-89		R	R	**CF128**		Ø 17,46	
	84-3/88		R	R	**CF111**		Ø 17,46	Exc. SW
	4/88-89				**PF030**		Ø 20,64	
	9/84-3/88				**PF117**		Ø 20,64	Exc. SW
	84-				**CZ008**		Ø 25,40	
	84-				**PZ013**		Ø 19,05	
1.3 (Exc. SW) Eng.AR30502 (58kW)	4/88-89		R	L	**CF129**		Ø 17,46	
	5/83-3/88		R	L	**CF110**		Ø 17,46	Exc. SW
	4/88-89		R	R	**CF128**		Ø 17,46	
	5/83-3/88		R	R	**CF111**		Ø 17,46	Exc. SW
	4/88-89				**PF030**		Ø 20,64	
	5/83-8/84				**PF138**		Ø 20,64	Exc. SW
	9/84-3/88				**PF117**		Ø 20,64	Exc. SW
	5/83-				**CZ008**		Ø 25,40	
	5/83-				**PZ013**		Ø 19,05	
1.3 (Exc. SW) Eng.AR30502/ AR30586 (55kW)	4/88-89		R	L	**CF129**		Ø 17,46	
	5/83-3/88		R	L	**CF110**		Ø 17,46	Exc. SW
	4/88-89		R	R	**CF128**		Ø 17,46	
	5/83-3/88		R	R	**CF111**		Ø 17,46	Exc. SW
	4/88-89				**PF030**		Ø 20,64	
	5/83-8/84				**PF138**		Ø 20,64	Exc. SW
	9/84-3/88				**PF117**		Ø 20,64	Exc. SW
	5/83-				**CZ008**		Ø 25,40	
	5/83-				**PZ013**		Ø 19,05	
1.3 i.e. Eng.AR30168 (66kW)	4/88-89		R	L	**CF129**		Ø 17,46	
	5/83-3/88		R	L	**CF110**		Ø 17,46	Exc. SW
	4/88-89		R	R	**CF128**		Ø 17,46	
	5/83-3/88		R	R	**CF111**		Ø 17,46	Exc. SW
	4/88-89				**PF030**		Ø 20,64	
	5/83-8/84				**PF138**		Ø 20,64	Exc. SW
	9/84-3/88				**PF117**		Ø 20,64	Exc. SW
	5/83-				**CZ008**		Ø 25,40	
	5/83-				**PZ013**		Ø 19,05	
1.5 Eng.AR30182 (70kW)	83-89		R	L	**CF110**		Ø 17,46	
	89-93		R	L	**CF129**		Ø 17,46	
	83-89		R	R	**CF111**		Ø 17,46	
	89-93		R	R	**CF128**		Ø 17,46	
	83-84				**PF138**		Ø 20,64	
	84-89				**PF117**		Ø 20,64	
	89-93				**PF030**		Ø 20,64	
1.5, 4WD Eng.AR30143/ AR30504 (62kW)	5/83-8/84		R	L	**CF110**		Ø 17,46	Exc. SW
	9/84-8/85		R	L	**CF113**		Ø 19,05	
	5/83-8/84		R	R	**CF111**		Ø 17,46	Exc. SW
	9/84-8/85		R	R	**CF112**		Ø 19,05	
	5/83-8/84				**PF138**		Ø 20,64	Exc. SW
	9/84-85				**PF117**		Ø 20,64	
	5/83-				**CZ008**		Ø 25,40	
	5/83-				**PZ013**		Ø 19,05	
1.5, 4WD Eng.AR30520 (66kW)	9/84-86		R	L	**CF110**		Ø 17,46	Exc. SW
	9/84-86		R	R	**CF111**		Ø 17,46	Exc. SW
	9/84-86				**PF117**		Ø 20,64	Exc. SW
	9/84-86				**CZ008**		Ø 25,40	
	9/84-86				**PZ013**		Ø 19,05	
1.5, 4WD Eng.AR30588 (75kW)	86-12/89		R	L	**CF110**		Ø 17,46	Exc. SW
	9/86-12/89		R	L	**CF113**		Ø 19,05	
	86-12/89		R	R	**CF111**		Ø 17,46	Exc. SW
	9/86-12/89		R	R	**CF112**		Ø 19,05	
	86-12/89				**PF117**		Ø 20,64	Exc. SW
	9/86-12/89				**PF030**		Ø 20,64	
	86-89				**CZ008**		Ø 25,40	
	86-89				**PZ013**		Ø 19,05	
1.5, QV, 4WD Eng.AR30146/ AR30508/ AR30588 (77kW)	9/84-12/89		R	L	**CF113**		Ø 19,05	
	9/84-12/89		R	R	**CF112**		Ø 19,05	
	84-89				**PF138**		Ø 20,64	

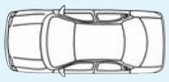		Spare Parts	F/R	L/R	FRITECH ref.		DIMENSIONS mm.	NOTE
1.5, QV, 4WD Eng.AR30146/ AR30508/ AR30588	9/84-8/86				**PF117**		Ø 20,64	
(77kW)	9/86-12/89				**PF030**		Ø 20,64	
	84-89				**CZ008**		Ø 25,40	
	84-89				**PZ013**		Ø 19,05	
1.7 Eng.AR30550 (84-87kW)	88-89		R	L	**CF113**		Ø 19,05	
	88-89		R	R	**CF112**		Ø 19,05	
	88-89				**PF030**		Ø 20,64	
	88-89				**CZ008**		Ø 25,40	
	88-89				**PZ013**		Ø 19,05	
1.7 (Exc. SW) Eng.AR30550 (95kW)	86-89		R	L	**CF129**		Ø 17,46	
	86-89		R	R	**CF128**		Ø 17,46	
	86-89				**PF030**		Ø 20,64	
1.7 i.e., 4WD Eng.AR30558 (77kW)	88-89		R	L	**CF113**		Ø 19,05	
	88-89		R	R	**CF112**		Ø 19,05	
	88-89				**PF030**		Ø 20,64	
	88-89				**CZ008**		Ø 25,40	
	88-89				**PZ013**		Ø 19,05	
1.8 TD Eng.VM82A (54kW)	86-90		R	L	**CF129**		Ø 17,46	
	86-90		R	R	**CF128**		Ø 17,46	
	86-90				**PF030**		Ø 20,64	
1.8 TD Eng.VM82A (62kW)	1/86-6/86		R	L	**CF129**		Ø 17,46	
	1/86-6/86		R	R	**CF128**		Ø 17,46	
	1/86-6/86				**PF030**		Ø 20,64	
33 II (907A,B), Sportwagon 1/90-9/94								
1.4 (58kW)	91-94		R	L	**CF129**		Ø 17,46	
	91-94		R	R	**CF128**		Ø 17,46	
	91-94				**PF030**		Ø 20,64	
1.4 i.e., 4WD Eng.AR30587/ AR30753/ AR30755	91-94		R	L	**CF129**		Ø 17,46	
(66kW)	91-94		R	R	**CF128**		Ø 17,46	
	91-94				**PF030**		Ø 20,64	
1.5 Eng.AR30146 (77kW)	90-93		R	L	**CF129**		Ø 17,46	
	90-93		R	R	**CF128**		Ø 17,46	
	90-93				**PF030**		Ø 20,64	
1.5 i.e Eng.AR30751 (71kW)	90-94		R	L	**CF129**		Ø 17,46	
	90-94		R	R	**CF128**		Ø 17,46	
	90-94				**PF030**		Ø 20,64	
1.5 i.e. Eng.AR30750 (74kW)	90-91		R	L	**CF129**		Ø 17,46	
	90-91		R	R	**CF128**		Ø 17,46	
	90-91				**PF030**		Ø 20,64	
1.7 16v, 4WD Eng.AR30747 (95-97kW)	90-94		R	L	**CF129**		Ø 17,46	
	90-94		R	R	**CF128**		Ø 17,46	
	90-94				**PF030**		Ø 20,64	
1.7 i.e., 4WD Eng.AR30736/ AR30737 (77-79kW)	90-94		R	L	**CF129**		Ø 17,46	
	90-94		R	R	**CF128**		Ø 17,46	
	90-94				**PF030**		Ø 20,64	
1.8 TD (Exc. SW) Eng.VM96A (62kW)	90-94		R	L	**CF129**		Ø 17,46	
	90-94		R	R	**CF128**		Ø 17,46	
	90-94				**PF030**		Ø 20,64	
75 (162B) 1/85-9/92								
1.6 Eng.AR61101/ AR61102 (81kW)	85-92				**PF116**		Ø 22,20	
	87-91				**CZ009**		Ø 25,40	
	87-91				**PZ016**		Ø 19,05	
1.6, Kat Eng.AR06100 (81kW)	85-92				**PF116**		Ø 22,20	
	87-91				**CZ009**		Ø 25,40	
	87-91				**PZ016**		Ø 19,05	
1.8 Eng.AR06168 (88kW)	88-92				**PF116**		Ø 22,20	
	88-91				**CZ009**		Ø 25,40	
	88-91				**PZ016**		Ø 19,05	
1.8 Eng.AR06202 (85kW)	85-89				**PF116**		Ø 22,20	
	87-89				**CZ009**		Ø 25,40	
	87-89				**PZ016**		Ø 19,05	
1.8 Eng.AR61201 (90kW)	89-92				**PF116**		Ø 22,20	
	89-91				**CZ009**		Ø 25,40	
	89-91				**PZ016**		Ø 19,05	

ALFA ROMEO

		Spare Parts	F/R	L/R	FRITECH ref.		DIMENSIONS mm.	NOTE
1.8 T. Eng.AR06134 (110kW)	86-92				**PF116**		Ø 22,20	
1.8 T. i.e. Eng.AR06158 (114kW)	86-90				**PF116**		Ø 22,20	
2.0 Eng.AR06212 (94kW)	85-88				**PF116**		Ø 22,20	
2.0 T.S, Kat Eng.AR06166/ AR06224 (107-109kW)	85-92				**PF116**		Ø 22,20	
	87-91				**CZ009**		Ø 25,40	
	87-91				**PZ016**		Ø 19,05	
2.0 TD Eng.VM80A (70kW)	85-92				**PF116**		Ø 22,20	
	85-91				**CZ009**		Ø 25,40	
	85-91				**PZ016**		Ø 19,05	
2.4 TD Eng.VM81A (82kW)	89-92				**PF116**		Ø 22,20	
2.5 V6 Eng.AR01646/ AR01911 (115kW)	85-86				**PF116**		Ø 22,20	
2.5 V6 Kat Eng.AR01648 (113kW)	86-89				**PF116**		Ø 22,20	
3.0 V6 Eng.AR61503 (141kW)	90-92				**PF116**		Ø 22,20	
	90-91				**CZ009**		Ø 25,40	
	90-91				**PZ016**		Ø 19,05	
3.0 V6, Kat Eng.AR06120/ AR06124 (136kW)	87-92				**PF116**		Ø 22,20	
	87-92				**CZ009**		Ø 25,40	
	87-92				**PZ016**		Ø 19,05	
90 (162) 10/84-7/87								
1.8 Eng.AR06168 (88kW)	84-87				**PF116**		Ø 22,20	
	84-87				**CZ009**		Ø 25,40	
	84-87				**PZ016**		Ø 19,05	
1.8 Eng.AR06202 (85kW)	84-87				**PF116**		Ø 22,20	
	84-87				**CZ009**		Ø 25,40	
	84-87				**PZ016**		Ø 19,05	
2.0 i.e. Eng.AR01713/ AR06212 (94kW)	84-87				**PF116**		Ø 22,20	
	84-87				**CZ009**		Ø 25,40	
	84-87				**PZ016**		Ø 19,05	
2.0 i.e. Eng.AR06210 (97kW)	84-87				**PF116**		Ø 22,20	
	84-87				**CZ009**		Ø 25,40	
	84-87				**PZ016**		Ø 19,05	
2.4 TD Eng.VM81A (81kW)	84-87				**PF116**		Ø 22,20	
	84-87				**CZ009**		Ø 25,40	
	84-87				**PZ016**		Ø 19,05	
2.5 i.e. V6 Eng.AR01646/ AR01911 (115kW)	84-87				**PF116**		Ø 22,20	
	84-87				**CZ009**		Ø 25,40	
	84-87				**PZ016**		Ø 19,05	
Alfasud (901) 6/72-12/84								
1.5 Eng.AR30146 (77kW)	83-84		R	L	**CF110**		Ø 17,46	
	83-84		R	R	**CF111**		Ø 17,46	
	83-84				**PF117**		Ø 20,64	
	83-84				**CZ008**		Ø 25,40	
	83-84				**PZ013**		Ø 19,05	
Alfasud Sprint (902.A) 9/76-12/89								
1.3 Eng.AR30168 (63kW)	79-89		R	L	**CF129**		Ø 17,46	
	79-89		R	R	**CF128**		Ø 17,46	
	86-				**PF030**		Ø 20,64	
	10/86-				**CZ008**		Ø 25,40	
	10/86-				**PZ013**		Ø 19,05	
1.5 Eng.AR30128 (70kW)	82-86		R	L	**CF110**		Ø 17,46	
	82-86		R	R	**CF111**		Ø 17,46	
	86-				**PF117**		Ø 20,64	
	79-86				**CZ008**		Ø 25,40	
	79-86				**PZ013**		Ø 19,05	
1.5 Eng.AR30146 (77kW)	83-87		R	L	**CF110**		Ø 17,46	
	83-87		R	R	**CF111**		Ø 17,46	
	86-				**PF117**		Ø 20,64	
	83-87				**CZ008**		Ø 25,40	
	83-87				**PZ013**		Ø 19,05	
1.5 Eng.AR30588 (75kW)	83-87		R	L	**CF110**		Ø 17,46	
	83-87		R	R	**CF111**		Ø 17,46	
	86-				**PF117**		Ø 20,64	
	83-87				**CZ008**		Ø 25,40	
	83-87				**PZ013**		Ø 19,05	

		Spare Parts	F/R	L/R	FRITECH ref.		DIMENSIONS mm.	NOTE
1.7 i.e., 4WD Eng.AR30558 (77kW)	87-		R	L	**CF129**		Ø 17,46	
	87-		R	R	**CF128**		Ø 17,46	
	87-				**PF030**		Ø 20,64	
	87-				**CZ008**		Ø 25,40	
	87-				**PZ013**		Ø 19,05	
Alfetta (116) 1/74-1/86								
1.6, GT Eng.AR01600 (79kW)	75-84				**PF116**		Ø 22,20	
	75-84				**CZ009**		Ø 25,40	
1.8 Eng.AR01678 (90kW)	79-84				**PF116**		Ø 22,20	
	79-84				**CZ009**		Ø 25,40	
1.8, GT Eng.AR01608 (90kW)	74-84				**PF116**		Ø 22,20	
	74-84				**CZ009**		Ø 25,40	
1.8, GT Eng.AR01608X (85kW)	74-77				**PF116**		Ø 22,20	
	74-77				**CZ009**		Ø 25,40	
2.0 Eng.AR11655/ AR58484 (96kW)	77-80				**PF116**		Ø 22,20	
	77-				**CZ009**		Ø 25,40	
2.0 TD Eng.VM4HT2 (60kW)	79-83				**PF116**		Ø 22,20	
	79-83				**CZ009**		Ø 25,40	
	79-83				**PZ016**		Ø 19,05	
2.0, GT Eng.AR01623 (89kW)	77-85				**PF116**		Ø 22,20	
	77-				**CZ009**		Ø 25,40	
	85-				**PZ016**		Ø 19,05	
2.0, GT Eng.AR01713/ AR10520 (97kW)	77-84				**PF116**		Ø 22,20	
	77-				**CZ009**		Ø 25,40	
2.4 TD Eng.VM4HT2.4 (70kW)	83-84				**PF116**		Ø 22,20	
Arna (920) 3/83-12/86								
1.2 Eng.AR30102 (46kW)	83-86		R	L	**CF110**		Ø 17,46	LHD
	84-86		R	L	**CF112**		Ø 19,05	
	83-86		R	R	**CF111**		Ø 17,46	LHD
	84-86		R	R	**CF113**		Ø 19,05	
	83-86				**PF116**		Ø 22,20	LHD
	9/83-86				**CZ008**		Ø 25,40	
	9/83-86				**PZ013**		Ø 19,05	
1.2 Eng.AR30500 (50kW)	84-86		R	L	**CF112**		Ø 19,05	
	84-86		R	R	**CF113**		Ø 19,05	
	1/85-12/86		R		**CF204**	Nabco	Ø 17,46	Alu
	9/83-86				**CZ008**		Ø 25,40	
	9/83-86				**PZ013**		Ø 19,05	
1.2 Eng.AR31000 (44kW)	84-86		R	L	**CF112**		Ø 19,05	
	84-86		R	R	**CF113**		Ø 19,05	
	1/85-12/86		R		**CF204**	Nabco	Ø 17,46	Alu
	9/83-86				**CZ008**		Ø 25,40	
	9/83-86				**PZ013**		Ø 19,05	
1.3 TI Eng.AR30168/ AR31010 (63kW)	83-86		R	L	**CF110**		Ø 17,46	LHD
	84-86		R	L	**CF112**		Ø 19,05	
	83-86		R	R	**CF111**		Ø 17,46	LHD
	84-86		R	R	**CF113**		Ø 19,05	
	83-86				**PF116**		Ø 22,20	LHD
	83-86				**CZ008**		Ø 25,40	
	83-86				**PZ013**		Ø 19,05	
1.5 Eng.AR30182 (70kW)	83-86		R	L	**CF110**		Ø 17,46	LHD
	84-86		R	L	**CF112**		Ø 19,05	
	83-86		R	R	**CF111**		Ø 17,46	LHD
	84-86		R	R	**CF113**		Ø 19,05	
	83-86				**PF116**		Ø 22,20	LHD
	83-86				**CZ008**		Ø 25,40	
	83-86				**PZ013**		Ø 19,05	
Brera (177) 1/06-10/10								
1.8 TBi Eng.939B1.000 (147kW)	09-				**PF520**	Trw	Ø 25,40	Alu, +ABS
2.0 JTDm Eng.939B3.000 (125kW)	09-				**PF520**	Trw	Ø 25,40	Alu, +ABS
2.2 JTS Eng.939A5.000 (136kW)	06-				**PF521**	Trw	Ø 25,40	Alu, +ABS, +VDC
2.4 JTD 20v Eng.939A3.000 (147kW)	06-				**PF521**	Trw	Ø 25,40	Alu, +ABS, +VDC
2.4 JTD 20v Eng.939A9.000 (154kW)	07-				**PF521**	Trw	Ø 25,40	Alu, +ABS, +VDC

ALFA ROMEO

		Spare Parts	F/R	L/R	FRITECH ref.		DIMENSIONS mm.	NOTE
3.2 JTS Q4 Eng.939A0.000 (191kW)	06-				**PF521**	Trw	Ø 25,40	Alu, +ABS, +VDC
Giulia 6/64-12/78								
1.3 Eng.AR00530 (64kW)	74-78				**PF116**		Ø 22,20	
1.3 TI (62kW)	1/70-75				**PF116**		Ø 22,20	
1.6 Eng.AR00526 (76kW)	74-78				**PF116**		Ø 22,20	
1.8 D Eng.4.108 (38kW)	76-78				**PF116**		Ø 22,20	
Giulietta II (116) 10/77-12/85								
1.3 Eng.AR01644 (66kW)	10/77-83				**PF116**		Ø 22,20	
	77-83				**CZ009**		Ø 25,40	
	82-83				**PZ016**		Ø 19,05	
1.6 Eng.AR01600 (79kW)	10/77-85				**PF116**		Ø 22,20	
	77-83				**CZ009**		Ø 25,40	
	82-85				**PZ016**		Ø 19,05	
1.8 Eng.AR01678 (90kW)	79-85				**PF116**		Ø 22,20	
	79-85				**CZ009**		Ø 25,40	
	82-85				**PZ016**		Ø 19,05	
2.0 Eng.AR01655/ AR11671 (96kW)	80-85				**PF116**		Ø 22,20	
	80-85				**CZ009**		Ø 25,40	
	80-85				**PZ016**		Ø 19,05	
2.0 TD Eng.VM4HT (61kW)	83-85				**CZ009**		Ø 25,40	
	83-85				**PZ016**		Ø 19,05	
Giulietta III (940) 5/10-								
1.4 T. Eng.198A4.000 (88kW)	10-				**PF934**	Ate	Ø 23,81	Alu
1.4 T. Eng.940A2.000 (125kW)	10-				**PF934**	Ate	Ø 23,81	Alu
1.4 T. Eng.940A6.000 (85kW)	10-				**PF934**	Ate	Ø 23,81	Alu
1.4 T. Eng.955A6.000 (77kW)	11-				**PF934**	Ate	Ø 23,81	Alu
1.4 T. GPL Eng.198A4.000 (88kW)	12-				**PF934**	Ate	Ø 23,81	Alu
1.6 JTDM Eng.940A3.000 (77kW)	10-				**PF934**	Ate	Ø 23,81	Alu
1.8 TBi Eng.940A1.000 (173kW)	10-				**PF934**	Ate	Ø 23,81	Alu
1.8 TCT Eng.940A1.000 (177kW)	14-				**PF934**	Ate	Ø 23,81	Alu
2.0 JTDm Eng.940A4.000 (125kW)	10-				**PF934**	Ate	Ø 23,81	Alu
2.0 JTDm Eng.940A5.000 (103kW)	10-				**PF934**	Ate	Ø 23,81	Alu
2.0 JTDm Eng.940B4.000 (129kW)	14-				**PF934**	Ate	Ø 23,81	Alu
2.0 JTDm Eng.940B5.000 (110kW)	13-				**PF934**	Ate	Ø 23,81	Alu
GT (937) 11/03-12/10								
1.8 T.S. 16v Eng.AR32205 (103kW)	11/03-				**PF239**	Luc	Ø 22,20	Alu, +VDC
	11/03-				**PF505**	Luc	Ø 22,20	Alu, -VDC
	03-				**PZ073**	Valeo	Ø 15,87	
1.9 JTD 16v Eng.937A5.000 (110kW)	03-				**PF239**	Luc	Ø 22,20	Alu, +VDC
	03-				**PF505**	Luc	Ø 22,20	Alu, -VDC
	03-				**CZ071**	Bch	Ø 20,64	
	03-				**PZ073**	Valeo	Ø 15,87	
1.9 JTDM 16V Eng.937A6.000 (125kW)	08-				**PF239**	Luc	Ø 22,20	Alu, +VDC
	08-				**PF505**	Luc	Ø 22,20	Alu, -VDC
2.0 JTS Eng.932A2.000 (119kW)	06-				**PF239**	Luc	Ø 22,20	Alu, +VDC
	06-				**PF505**	Luc	Ø 22,20	Alu, -VDC
	06-				**PZ073**	Valeo	Ø 15,87	
2.0 JTS Eng.937A1.000 (121kW)	11/03-				**PF239**	Luc	Ø 22,20	Alu, +VDC
	11/03-				**PF505**	Luc	Ø 22,20	Alu, -VDC
	03-				**PZ073**	Valeo	Ø 15,87	
3.2 V6 24v Eng.936A6.000 (176kW)	11/03-				**PF239**	Luc	Ø 22,20	Alu, +VDC
	03-				**CZ071**	Bch	Ø 20,64	
	03-				**PZ073**	Valeo	Ø 15,87	
GTV (116) 1/78-2/87								
2.0 Eng.AR01655/ AR06212 (94kW)	11/84-86				**PF116**		Ø 22,20	
	11/80-9/86				**CZ009**		Ø 25,40	
	9/83-9/86				**PZ016**		Ø 19,05	
2.0 Eng.AR11655/ AR58484 (96kW)	11/84-86				**PF116**		Ø 22,20	
	11/80-9/86				**CZ009**		Ø 25,40	
	9/83-9/86				**PZ016**		Ø 19,05	
2.5 Eng.AR01646 (116kW)	11/84-87				**PF116**		Ø 22,20	
	11/80-9/87				**CZ009**		Ø 25,40	
	9/83-9/87				**PZ016**		Ø 19,05	

		Spare Parts	F/R	L/R	FRITECH ref.		DIMENSIONS mm.	NOTE
GTV (916C) 6/95-12/05								
1.8 T.S. 16v Eng.AR32201 (106kW)	98-				**PF042**	Bdx	Ø 22,20	Supplied -Servo
	98-				**CZ023**		Ø 25,40	
	98-				**PZ034**		Ø 19,05	
2.0 JTS Eng.937A1.000 (121kW)	03-				**PF382**	Bch	Ø 23,81	Supplied -Servo, -ABS
2.0 T.S. 16v Eng.AR16201/ AR32310 (110kW)	1/97-				**PF042**	Bdx	Ø 22,20	Supplied -Servo
2.0 T.S. 16v Eng.AR32301 (114kW)	98-00				**PF042**	Bdx	Ø 22,20	Supplied -Servo
	98-00				**PZ034**		Ø 19,05	
2.0 V6 T. Eng.AR16202 (148kW)	6/95-				**PF042**	Bdx	Ø 22,20	Supplied -Servo
	95-				**CZ023**		Ø 25,40	
	95-				**PZ034**		Ø 19,05	
3.0 V6 24v Eng.AR16102 (162kW)	96-				**PF042**	Bdx	Ø 22,20	Supplied -Servo
	96-				**CZ023**		Ø 25,40	
	96-				**PZ034**		Ø 19,05	
3.0 V6 24v Eng.AR16105 (160kW)	00-				**PF382**	Bch	Ø 23,81	Supplied -Servo, -ABS
	00-				**PF042**	Bdx	Ø 22,20	Supplied -Servo
	00-				**CZ023**		Ø 25,40	
	00-				**PZ034**		Ø 19,05	
3.2 V6 24v Eng.936A6.000 (176kW)	03-				**PF382**	Bch	Ø 23,81	Supplied -Servo, -ABS
Mito (955) 8/08-								
0.9 T Eng.199B6.000 (77kW)	13-				**PF700**	Bch	Ø 22,20	Alu
	13-				**PZ146**	Fte	Ø 15,87	Alu
0.9 Twinair Eng.312A2.000 (63kW)	11-				**PF700**	Bch	Ø 22,20	Alu
	11-				**PZ146**	Fte	Ø 15,87	Alu
1.3 JTDM Eng.199B1.000 (70kW)	09-				**PF858**	Bch	Ø 23,81	Alu
	09-				**PZ146**	Fte	Ø 15,87	Alu
1.3 JTDM Eng.199B4.000 (62kW)	11-				**PF858**	Bch	Ø 23,81	Alu
	11-				**PZ146**	Fte	Ø 15,87	Alu
1.3 JTDM 16V Eng.199A3.000 (66kW)	09-				**PF858**	Bch	Ø 23,81	Alu
	09-				**PZ146**	Fte	Ø 15,87	Alu
1.4 Eng.199A6.000 (70kW)	08-				**PF700**	Bch	Ø 22,20	Alu, -ESP
	08-				**PZ146**	Fte	Ø 15,87	Alu
1.4 Eng.955A1.000 (57kW)	11-				**PF700**	Bch	Ø 22,20	Alu, -ESP
	11-				**PZ146**	Fte	Ø 15,87	Alu
1.4 Eng.955A6.000 (77kW)	09-				**PF700**	Bch	Ø 22,20	Alu, -ESP
	09-				**PZ146**	Fte	Ø 15,87	Alu
1.4 Eng.955A9.000 (51kW)	11-				**PF700**	Bch	Ø 22,20	Alu
	11-				**PZ146**	Fte	Ø 15,87	Alu
1.4 16v Eng.955A1.000 (58kW)	08-				**PF700**	Bch	Ø 22,20	Alu, -ESP
	08-				**PZ146**	Fte	Ø 15,87	Alu
1.4 Bifuel Eng.198A4.000 (88kW)	11-				**PF700**	Bch	Ø 22,20	Alu
	11-				**PF858**	Bch	Ø 23,81	Alu
	11-				**PZ146**	Fte	Ø 15,87	Alu
1.4 T Eng.198A1.000 (110kW)	08-				**PF858**	Bch	Ø 23,81	Alu
1.4 T Eng.198A4.000 (88kW)	09-				**PF858**	Bch	Ø 23,81	Alu
	09-				**PZ146**	Fte	Ø 15,87	Alu
1.4 T Eng.955B1.000 (102kW)	14-				**PF700**	Bch	Ø 22,20	Alu
	14-				**PZ146**	Fte	Ø 15,87	Alu
1.4 T. Eng.940A2.000 (125kW)	10-				**PF858**	Bch	Ø 23,81	Alu
	10-				**PZ146**	Fte	Ø 15,87	Alu
1.4 T. Eng.955A2.000 (99kW)	09-				**PF858**	Bch	Ø 23,81	Alu
	09-				**PZ146**	Fte	Ø 15,87	Alu
1.4 T. Eng.955A8.000 (120kW)	09-				**PF858**	Bch	Ø 23,81	Alu
1.4 T. 16v Eng.199A8.000 (114kW)	08-				**PF858**	Bch	Ø 23,81	Alu
	08-				**PZ146**	Fte	Ø 15,87	Alu
1.6 JTDM 16V Eng.198A2.000 (88kW)	08-				**PF858**	Bch	Ø 23,81	Alu
	08-				**PZ146**	Fte	Ø 15,87	Alu
Montreal 12/72-3/79								
2.6 Eng.AR10832 (143kW)	72-75				**PF116**		Ø 22,20	
	72-75				**PZ016**		Ø 19,05	
RZ 1/92-12/94								
3.0 V6 Zagato Eng.AR61501 (152kW)	92-				**PZ016**		Ø 19,05	

ALFA ROMEO

		Spare Parts	F/R	L/R	FRITECH ref.		DIMENSIONS mm.	NOTE
Spider (916S) 6/95-6/06								
1.8 T.S. 16v Eng.AR32201 (106kW)	98-				**PF042**	Bdx	Ø 22,20	Supplied -Servo
	98-				**CZ023**		Ø 25,40	
	98-				**PZ034**		Ø 19,05	
2.0 JTS Eng.937A1.000 (121kW)	03-06				**PF382**	Bch	Ø 23,81	Supplied -Servo, -ABS
2.0 T.S. 16v Eng.AR16201/ AR32310 (110kW)	2/95-				**PF042**	Bdx	Ø 22,20	Supplied -Servo
2.0 T.S. 16v Eng.AR32301 (114kW)	98-				**PF042**	Bdx	Ø 22,20	Supplied -Servo
	98-				**CZ023**		Ø 25,40	
	98-				**PZ034**		Ø 19,05	
2.0 V6 T. Eng.AR16202 (148kW)	98-				**PF042**	Bdx	Ø 22,20	Supplied -Servo
	98-				**CZ023**		Ø 25,40	
	98-				**PZ034**		Ø 19,05	
3.0 V6 Eng.AR16101 (141kW)	2/95-				**PF042**	Bdx	Ø 22,20	Supplied -Servo
3.0 V6 Eng.AR16105 (160kW)	10/00-				**CZ023**		Ø 25,40	
	10/00-				**PZ034**		Ø 19,05	
3.0 V6 24v Eng.AR16102 (162kW)	99-				**CZ023**		Ø 25,40	
	99-				**PZ034**		Ø 19,05	
3.2 V6 24v Eng.936A6.000 (176kW)	03-06				**PF382**	Bch	Ø 23,81	Supplied -Servo, -ABS
Spider (939) 1/06-12/10								
1.8 TBi Eng.939B1.000 (147kW)	09-				**PF521**	Trw	Ø 25,40	Alu, +ABS, +ESP
	09-				**PF520**	Trw	Ø 25,40	Alu, +ABS, -ESP
2.0 JTDm Eng.939B3.000 (125kW)	09-				**PF521**	Trw	Ø 25,40	Alu, +ABS, +ESP
	09-				**PF520**	Trw	Ø 25,40	Alu, +ABS, -ESP
2.2 JTS Eng.939A5.000 (136kW)	06-				**PF521**	Trw	Ø 25,40	Alu, +ABS, +VDC
2.4 JTD 20v Eng.939A3.000 (147kW)	06-				**PF521**	Trw	Ø 25,40	Alu, +ABS, +VDC
2.4 JTD 20v Eng.939A9.000 (154kW)	07-				**PF521**	Trw	Ø 25,40	Alu, +ABS, +VDC
3.2 JTS Q4 Eng.939A0.000 (191kW)	06-				**PF521**	Trw	Ø 25,40	Alu, +ABS, +VDC

ALFA ROMEO LCV

AR 6 (280) 1/82-8/90								
1.8 Eng.169B(XM7T) (49-51kW)	82-85		R		**CF270**	Luc	Ø 22,22	Exc. 18Q
	85-88		R		**CF157**	Luc	Ø 25,40	Exc. 18Q
	85-88		R		**CF210**		Ø 26,99	18Q
	82-88				**PF031**		Ø 22,20	Exc. 18Q
	85-88				**PF029**		Ø 25,40	18Q
	1/82-12/82				**CT012**		Ø 25,40	Alu, Exc. 18Q
	1/83-88				**CT011**		Ø 25,40	Alu, Exc. 18Q
1.9 D Eng.160D1.000 (51kW)	85-		R		**CF157**	Luc	Ø 25,40	10Q, 13Q Diesel, 14Q
	85-				**PF031**		Ø 22,20	10Q, 13Q Diesel, 14Q
2.0 Eng.170B (55kW)	86-90		R		**CF157**	Luc	Ø 25,40	Exc. 18Q
	86-90		R		**CF210**		Ø 26,99	18Q
	86-90				**PF031**		Ø 22,20	Exc. 18Q
	86-90				**PF029**		Ø 25,40	18Q
	86-90				**CT011**		Ø 25,40	Alu, Exc. 18Q
2.4 D Eng.8144.61.200 (53kW)	85-		R		**CF157**	Luc	Ø 25,40	10Q, 13Q Diesel, 14Q
	85-				**PF031**		Ø 22,20	10Q, 13Q Diesel, 14Q
2.4 TD Eng.8144.21.220 (68kW)	86-		R		**CF157**	Luc	Ø 25,40	10Q, 13Q Diesel, 14Q
	86-				**PF031**		Ø 22,20	10Q, 13Q Diesel, 14Q
2.5 D Eng.8144.67.220 (55kW)	86-		R		**CF157**	Luc	Ø 25,40	10Q, 13Q Diesel, 14Q
	86-				**PF031**		Ø 22,20	10Q, 13Q Diesel, 14Q
AR 8 (280) 4/78-12/89								
2.4 D Eng.8140.61.200 (53kW)	82-		R		**CF209**		Ø 15,87	Only 2.4D
	82-				**PF144**	Loc	Ø 22,20	Only 2.4D
	78-81				**CT001**	Benditalia	Ø 25,40	Alu
2.4 TD Eng.8140.21.200D.I. (68kW)	85-		R		**CF209**		Ø 15,87	Only 2.4D
	85-				**PF144**	Loc	Ø 22,20	Only 2.4D
	85-				**CT001**	Benditalia	Ø 25,40	Alu
2.5 D Eng.8144.67.220 (55kW)	86-		R		**CF209**		Ø 15,87	Only 2.4D
	86-				**PF144**	Loc	Ø 22,20	Only 2.4D
	86-				**CT001**	Benditalia	Ø 25,40	Alu
AR 8 (280) Van 4/78-12/89								
2.4 D Eng.8140.61.200 (53kW)	78-86		R		**CF163**		Ø 17,46	
	78-86				**PF025**	Bdx	Ø 20,64	

		Spare Parts	F/R	L/R	FRITECH ref.		DIMENSIONS mm.	NOTE
2.4 TD Eng.8140.21.200D.I. (68kW)	85-89		R		**CF163**		Ø 17,46	
	85-89				**PF025**	Bdx	Ø 20,64	
2.5 D Eng.8144.67.220 (55kW)	86-89		R		**CF163**		Ø 17,46	
	86-89				**PF025**	Bdx	Ø 20,64	

AMERICAN MOTORS

Ambassador								
6 Cyl.	58-66		R	L	**CF436**		Ø 22,20	
	67-72		R	L	**CF609**		Ø 23,81	
	58-66		R	R	**CF437**		Ø 22,20	
	67-72		R	R	**CF610**		Ø 23,81	
8 Cyl.	67-72		R	L	**CF609**		Ø 23,81	
	67-72		R	R	**CF610**		Ø 23,81	
American								
8 Cyl.	67-68		R	L	**CF436**		Ø 22,20	
	67-68		R	R	**CF437**		Ø 22,20	
Amx								
8 Cyl.	68-70		R	L	**CF436**		Ø 22,20	
	68-70		R	R	**CF437**		Ø 22,20	
All models	77-78		R	L	**CF436**		Ø 22,20	
	1/71-12/71		R	L	**CF609**		Ø 23,81	Exc. 8 Cyl., HDB
	77-78		R	R	**CF437**		Ø 22,20	
	1/71-12/71		R	R	**CF610**		Ø 23,81	Exc. 8 Cyl., HDB
Classic								
8 Cyl.	1/65-12/65		R	L	**CF609**		Ø 23,81	SW
	1/65-12/65		R	R	**CF610**		Ø 23,81	SW
Concord								
4-6 Cyl.	80-12/83		R	L	**CF609**		Ø 23,81	SW
	80-12/83		R	R	**CF610**		Ø 23,81	SW
Eagle - Sx4								
All models	80-12/83		R	L	**CF609**		Ø 23,81	SW
	80-12/83		R	R	**CF610**		Ø 23,81	SW
Gremlin								
8 Cyl.	72-76		R	L	**CF436**		Ø 22,20	
	72-76		R	R	**CF437**		Ø 22,20	
All models	1/71-12/71		R	L	**CF609**		Ø 23,81	Exc. 8 Cyl., HDB
	1/71-12/71		R	R	**CF610**		Ø 23,81	Exc. 8 Cyl., HDB
Hornet								
8 Cyl.	1/72-12/75		R	L	**CF436**		Ø 22,20	
	-71 / 1/76-		R	L	**CF609**		Ø 23,81	HDB
	1/72-12/75		R	R	**CF437**		Ø 22,20	
	-71 / 1/76-		R	R	**CF610**		Ø 23,81	HDB
Javelin								
8 Cyl.	68-74		R	L	**CF436**		Ø 22,20	
	68-74		R	R	**CF437**		Ø 22,20	
All models	1/71-12/71		R	L	**CF609**		Ø 23,81	Exc. 8 Cyl., HDB
	1/71-12/71		R	R	**CF610**		Ø 23,81	Exc. 8 Cyl., HDB
Kammback								
All models	1/83-12/83		R	L	**CF609**		Ø 23,81	
	1/83-12/83		R	R	**CF610**		Ø 23,81	
Marlin								
6-8 Cyl.	1/67-12/67		R	L	**CF609**		Ø 23,81	
	1/67-12/67		R	R	**CF610**		Ø 23,81	
Matador								
6-8 Cyl.	74-78		R	L	**CF436**		Ø 22,20	Exc. SW
	71-78		R	L	**CF609**		Ø 23,81	SW, HDB
	74-78		R	R	**CF437**		Ø 22,20	Exc. SW
	71-78		R	R	**CF610**		Ø 23,81	SW, HDB
Pacer								
All models	75-76		R	L	**CF436**		Ø 22,20	
	75-76		R	R	**CF437**		Ø 22,20	
Rambler								
8 Cyl.	1/69-12/69		R	L	**CF436**		Ø 22,20	
	1/69-12/69		R	R	**CF437**		Ø 22,20	

AMERICAN MOTORS

		Spare Parts	F/R	L/R	FRITECH ref.		DIMENSIONS mm.	NOTE
Rebel								
6-8 Cyl.	1/70-12/70		R	L	**CF609**		Ø 23,81	Exc. SW
	1/70-12/70		R	R	**CF610**		Ø 23,81	Exc. SW
Rogue								
6-8 Cyl.	67-69		R	L	**CF609**		Ø 23,81	
	67-69		R	R	**CF610**		Ø 23,81	
Spirit								
All models	1/71-12/71		R	L	**CF609**		Ø 23,81	Exc. 8 Cyl., HDB
	1/71-12/71		R	R	**CF610**		Ø 23,81	Exc. 8 Cyl., HDB

AUDI

100 I (C1) 11/68-7/76								
1.6 Eng.YM (63kW)	75-		R		**CF267**		Ø 15,87	Ch -31073209
1.8 Eng.ZU (63kW)	71-		R		**CF267**		Ø 15,87	Ch -31073209
1.8 Eng.ZV (59kW)	68-		R		**CF267**		Ø 15,87	Ch -31073209
1.8 Eng.ZX (66kW)	68-		R		**CF267**		Ø 15,87	Ch -31073209
1.8 LS Eng.ZZ (74kW)	70-		R		**CF267**		Ø 15,87	Ch -31073209
1.9 GL, Coupe Eng.ZJ (82kW)	70-		R		**CF267**		Ø 15,87	Ch -31073209
100 II (43, C2), Avant 6/76-7/83								
1.6 Eng.YV (63kW)	9/76-8/82		R		**CF080**		Ø 15,87	
1.9 Eng.WH (74kW)	8/80-8/82		R		**CF000**		Ø 17,46	
2.0 Eng.WA (85kW)	76-78		R		**CF000**		Ø 17,46	
2.0 D Eng.CN (51kW)	78-8/82		R		**CF000**		Ø 17,46	
2.0 TD Eng.DE (63kW)	79-8/82		R		**CF000**		Ø 17,46	
2.1 Eng.WB/ WE (85kW)	77-8/82		R		**CF000**		Ø 17,46	
2.1 Eng.WC (100kW)	77-8/82		R		**CF000**		Ø 17,46	
2.1 Eng.WG (100kW)	77-8/82		R		**CF000**		Ø 17,46	
100 III (44, 44Q, C3), Avant 8/82-7/91								
1.8 Eng.DR/ RS (55kW)	9/82-87		R		**CF000**		Ø 17,46	
	9/82-12/87				**PF142**		Ø 23,81	Alu, -ABS
1.8 Eng.JW/ NP (66kW)	83-89		R		**CF000**		Ø 17,46	
	83-12/87				**PF142**		Ø 23,81	Alu, -ABS
	1/88-				**CZ036**	Fte	Ø 22,20	
1.8 Eng.SH (65kW)	86-12/90		R		**CF000**		Ø 17,46	
	86-12/87				**PF142**		Ø 23,81	Alu, -ABS
	1/88-				**CZ036**	Fte	Ø 22,20	
1.8 Kat Eng.4B/ PH (66kW)	85-12/90		R		**CF000**		Ø 17,46	
	85-12/87				**PF142**		Ø 23,81	Alu, -ABS
	85-90				**CZ036**	Fte	Ø 22,20	
1.8 quattro Eng.JW/ NP (66kW)	1/88-				**CZ036**	Fte	Ø 22,20	
1.8 quattro Eng.SH (65kW)	1/88-				**CZ036**	Fte	Ø 22,20	
1.8 quattro Kat Eng.4B/ PH (66kW)	85-90				**CZ036**	Fte	Ø 22,20	
1.9 Eng.WH (74kW)	9/82-7/84		R		**CF000**		Ø 17,46	
	9/82-7/84				**PF142**		Ø 23,81	Alu, -ABS
2.0 Eng.KP (85kW)	9/84-87		R		**CF000**		Ø 17,46	
	9/84-12/87				**PF142**		Ø 23,81	Alu, -ABS
2.0 Eng.SL (83kW)	86-87		R		**CF000**		Ø 17,46	
	86-12/87				**PF142**		Ø 23,81	Alu, -ABS
2.0 D Eng.CN (51kW)	82-12/90		R		**CF000**		Ø 17,46	
	9/82-7/88				**PF142**		Ø 23,81	Alu, -ABS
	1/88-				**CZ036**	Fte	Ø 22,20	
2.0 Kat Eng.RT (85kW)	88-12/90		R		**CF000**		Ø 17,46	
	88-90				**CZ036**	Fte	Ø 22,20	
2.0 TD Eng.DE (64kW)	9/82-88		R		**CF000**		Ø 17,46	
	9/82-7/88				**PF142**		Ø 23,81	Alu, -ABS
	1/88-				**CZ036**	Fte	Ø 22,20	
2.0 TD Eng.NC (74kW)	88-12/90		R		**CF000**		Ø 17,46	
	88-90				**CZ036**	Fte	Ø 22,20	
2.1 Eng.WC (100kW)	82-84		R		**CF000**		Ø 17,46	
	82-84				**PF142**		Ø 23,81	Alu, -ABS
2.2 Eng.KZ (85kW)	84-86		R		**CF000**		Ø 17,46	
	84-86				**PF142**		Ø 23,81	Alu, -ABS
2.2 E quattro Eng.PX (88kW)	85-86				**PF142**		Ø 23,81	Alu, -ABS

		Spare Parts	F/R	L/R	FRITECH ref.		DIMENSIONS mm.	NOTE
2.2 quattro, Kat Eng.KU (101kW)	84-12/90				**PF142**		Ø 23,81	Alu, -ABS, -Servo
	84-90				**CZ036**	Fte	Ø 22,20	
2.2 T. Eng.MC (121kW)	86-12/90				**PF142**		Ø 23,81	Alu, -ABS, -Servo
	1/88-				**CZ036**	Fte	Ø 22,20	
2.2 T. quattro Eng.MC (121kW)	86-12/90				**PF142**		Ø 23,81	Alu, -ABS, -Servo
	1/88-				**CZ036**	Fte	Ø 22,20	
2.2, Kat Eng.KU/ HX (101kW)	84-7/88		R		**CF000**		Ø 17,46	
	84-7/88				**PF142**		Ø 23,81	Alu, -ABS
	84-90				**CZ036**	Fte	Ø 22,20	
2.3 Eng.NF (98kW)	1/90-11/90				**PF142**		Ø 23,81	Alu, -ABS, -Servo
	1/90-11/90				**CZ036**	Fte	Ø 22,20	
2.3 E Eng.NF (100kW)	86-11/90				**PF142**		Ø 23,81	Alu, -ABS, -Servo
	1/88-				**CZ036**	Fte	Ø 22,20	
2.3 E quattro Eng.NF (100kW)	86-12/90				**PF142**		Ø 23,81	Alu, -ABS, -Servo
	1/88-				**CZ036**	Fte	Ø 22,20	
2.3 quattro Eng.NF (98kW)	1/90-11/90				**PF142**		Ø 23,81	Alu, -ABS, -Servo
	1/90-11/90				**CZ036**	Fte	Ø 22,20	
2.4 D Eng.3D (60kW)	89-12/90		R		**CF000**		Ø 17,46	
	89-91				**CZ036**	Fte	Ø 22,20	
2.5 TDi Eng.1T (88kW)	1/90-11/90				**CZ036**	Fte	Ø 22,20	
100 IV (4A, C4), Avant 12/90-6/94								
2.0 Eng.AAE (74kW)	1/91-94		R		**CF127**		Ø 20,64	Alu
	1/91-94				**PF222**	Luc	Ø 23,81	Alu, +ABS
	1/91-94				**PF215**	Luc	Ø 23,81	Alu, -ABS
	91-94				**CZ036**	Fte	Ø 22,20	
2.0 E Eng.AAD/ ABK (85kW)	1/91-94		R		**CF127**		Ø 20,64	Alu
	1/91-94				**PF222**	Luc	Ø 23,81	Alu, +ABS
	1/91-94				**PF215**	Luc	Ø 23,81	Alu, -ABS
	90-94				**CZ036**	Fte	Ø 22,20	
2.0 E 16v, quattro Eng.ACE (102kW)	92-94				**PF222**	Luc	Ø 23,81	Alu, +ABS
	1/92-94				**PF215**	Luc	Ø 23,81	Alu, -ABS
	92-94				**CZ036**	Fte	Ø 22,20	
2.0 E quattro Eng.AAD/ ABK (85kW)	1/91-94		R		**CF127**		Ø 20,64	Alu
	1/91-94				**PF222**	Luc	Ø 23,81	Alu, +ABS
	1/91-94				**PF215**	Luc	Ø 23,81	Alu, -ABS
	90-94				**CZ036**	Fte	Ø 22,20	
2.2 S4 T. quattro Eng.AAN (169kW)	91-94				**CZ036**	Fte	Ø 22,20	
2.3 E Eng.AAR (98kW)	12/90-94				**PF222**	Luc	Ø 23,81	Alu, +ABS
	12/90-94				**PF215**	Luc	Ø 23,81	Alu, -ABS
	90-94				**CZ036**	Fte	Ø 22,20	
2.3 E quattro Eng.AAR (98kW)	12/90-94				**PF222**	Luc	Ø 23,81	Alu, +ABS
	12/90-94				**PF215**	Luc	Ø 23,81	Alu, -ABS
	90-94				**CZ036**	Fte	Ø 22,20	
2.4 D Eng.AAS (60kW)	1/91-94		R		**CF127**		Ø 20,64	Alu
	1/91-94				**PF222**	Luc	Ø 23,81	Alu, +ABS
	1/91-94				**PF215**	Luc	Ø 23,81	Alu, -ABS
	90-94				**CZ036**	Fte	Ø 22,20	
2.5 TDi Eng.AAT/ ABP (85kW)	90-94				**PF222**	Luc	Ø 23,81	Alu, +ABS
	90-94				**PF215**	Luc	Ø 23,81	Alu, -ABS
	90-94				**CZ036**	Fte	Ø 22,20	
2.6 Eng.ABC (110kW)	7/92-94				**PF222**	Luc	Ø 23,81	Alu, +ABS
	7/92-94				**PF215**	Luc	Ø 23,81	Alu, -ABS
	92-94				**CZ036**	Fte	Ø 22,20	
2.6 quattro Eng.ABC (110kW)	7/92-94				**PF222**	Luc	Ø 23,81	Alu, +ABS
	7/92-94				**PF215**	Luc	Ø 23,81	Alu, -ABS
	92-94				**CZ036**	Fte	Ø 22,20	
2.8 E Eng.AAH (128kW)	12/90-94				**PF222**	Luc	Ø 23,81	Alu, +ABS
	12/90-94				**PF215**	Luc	Ø 23,81	Alu, -ABS
	90-94				**CZ036**	Fte	Ø 22,20	
2.8 E quattro Eng.AAH (128kW)	12/90-94				**PF222**	Luc	Ø 23,81	Alu, +ABS
	12/90-94				**PF215**	Luc	Ø 23,81	Alu, -ABS
	90-94				**CZ036**	Fte	Ø 22,20	
4.2 S4 V8 quattro Eng.ABH (206kW)	92-94				**CZ036**	Fte	Ø 22,20	

AUDI

		Spare Parts	F/R	L/R	FRITECH ref.		DIMENSIONS mm.	NOTE
200 II (44, 44Q), Avant 8/83-12/91								
2.1 E (Exc. Avant) Eng.WC (100kW)	83-84				**PF142**		Ø 23,81	Alu, +Servo
2.1 T. Eng.KG (134kW)	83-88				**PF142**		Ø 23,81	Alu, +Servo
2.1 T. quattro Eng.KG (134kW)	83-88				**PF142**		Ø 23,81	Alu, +Servo
2.2 (Exc. Avant) Eng.KU (101kW)	84-85				**PF142**		Ø 23,81	Alu, +Servo
2.2 20v T. quattro Eng.3B (162kW)	89-90				**CZ036**	Fte	Ø 22,20	
2.2 T. Eng.1B (147kW)	88-91				**PF142**		Ø 23,81	Alu, +Servo
	2/88-91				**CZ036**	Fte	Ø 22,20	
2.2 T. Eng.MC (121kW)	8/85-1/88				**PF142**		Ø 23,81	Alu, +Servo
	2/88-91				**CZ036**	Fte	Ø 22,20	
2.2 T. (Exc. Avant) Eng.2B (140kW)	88-90				**PF142**		Ø 23,81	Alu, +Servo
	2/88-90				**CZ036**	Fte	Ø 22,20	
2.2 T. quattro Eng.1B (147kW)	88-91				**PF142**		Ø 23,81	Alu, +Servo
	2/88-91				**CZ036**	Fte	Ø 22,20	
2.2 T. quattro Eng.MC (121kW)	8/85-1/88				**PF142**		Ø 23,81	Alu, +Servo
	2/88-91				**CZ036**	Fte	Ø 22,20	
2.3 Eng.NF (100kW)	2/88-91				**CZ036**	Fte	Ø 22,20	
4000 10/78-9/87								
All models	79-87		R		**CF080**		Ø 15,87	S Quattro Exc. Turbo, HDB
	78-87		R		**CF000**		Ø 17,46	Coupé, Exc. S Quattro
50 (86) 8/74-7/78								
1.1 Eng.HB (37kW)	8/74-9/75		R		**CF107**	Fte	Ø 19,05	+CF
	8/74-7/78		R		**CF001**		Ø 14,29	-CF
	8/74-7/78		R		**CF000**		Ø 17,46	+CF
	8/74-7/78				**PF058**		Ø 20,64	+Servo
1.1 Eng.HC (44kW)	8/74-9/75		R		**CF107**	Fte	Ø 19,05	+CF
	8/74-7/77		R		**CF001**		Ø 14,29	-CF
	8/74-7/77		R		**CF000**		Ø 17,46	+CF
	8/74-7/77				**PF058**		Ø 20,64	+Servo
1.3 Eng.HH (44kW)	8/77-7/78		R		**CF001**		Ø 14,29	-CF
	8/77-7/78		R		**CF000**		Ø 17,46	+CF
	8/77-7/78				**PF058**		Ø 20,64	
1.3 Eng.HJ (43kW)	8/77-7/78		R		**CF001**		Ø 14,29	-CF
	8/77-7/78		R		**CF000**		Ø 17,46	+CF
	8/77-7/78				**PF058**		Ø 20,64	
5000 10/78-9/87								
All models	78-87		R		**CF000**		Ø 17,46	S Quattro Exc. Turbo
60, Variant 10/68-9/73								
1.5 (40-48kW)	68-73		R		**CF267**		Ø 15,87	
75, Variant 9/68-9/73								
1.5 (only variant) (40kW)	68-73		R		**CF267**		Ø 15,87	
1.7 Eng.ZG (55kW)	68-73		R		**CF267**		Ø 15,87	
80 I (80, 82, B1) 5/72-8/78								
1.3 Eng.ZA (40kW)	74-78		R		**CF001**		Ø 14,29	-CF
	74-78				**PF058**		Ø 20,64	+Servo
	74-78				**PF059**		Ø 20,64	+Servo
1.3 Eng.ZF (44kW)	74-78		R		**CF001**		Ø 14,29	-CF
	74-78				**PF058**		Ø 20,64	+Servo
	74-78				**PF059**		Ø 20,64	+Servo
1.5 Eng.YJ/ ZB (55kW)	74-75		R		**CF001**		Ø 14,29	-CF, M/T
	74-75		R		**CF000**		Ø 17,46	A/T
	74-75				**PF058**		Ø 20,64	+Servo, M/T
	74-75				**PF059**		Ø 20,64	+Servo, M/T
	74-75				**PF060**		Ø 20,64	A/T
	74-75				**PF293**		Ø 20,64	A/T
1.5 Eng.ZC (63kW)	74-75		R		**CF000**		Ø 17,46	M/T
	74-75				**PF058**		Ø 20,64	+Servo, M/T
	74-75				**PF059**		Ø 20,64	+Servo, M/T
1.6 Eng.YN (55kW)	75-78		R		**CF001**		Ø 14,29	-CF, M/T
	-78		R		**CF000**		Ø 17,46	Ch 8452040210-, A/T
	-78				**PF060**		Ø 20,64	Ch 8452040210-, A/T
	-78				**PF293**		Ø 20,64	Ch 8452040210-, A/T
	75-78				**PF058**		Ø 20,64	+Servo, M/T
	75-78				**PF059**		Ø 20,64	+Servo, M/T

		Spare Parts	F/R	L/R	FRITECH ref.		DIMENSIONS mm.	NOTE
1.6 Eng.YP (63kW)	75-78		R		**CF001**		Ø 14,29	-CF, M/T
	-78		R		**CF000**		Ø 17,46	Ch 8452040210-, A/T
	-78				**PF060**		Ø 20,64	Ch 8452040210-, A/T
	-78				**PF293**		Ø 20,64	Ch 8452040210-, A/T
	75-78				**PF058**		Ø 20,64	+Servo, M/T
	75-78				**PF059**		Ø 20,64	+Servo, M/T
1.6 GTE Eng.YS (81kW)	-78		R		**CF000**		Ø 17,46	Ch 8452040210-
	-78				**PF059**		Ø 20,64	Ch 8452040210-
80 II (81, 85, B2) 8/78-12/86								
1.2 Eng.FY (40kW)	78-07/81		R		**CF001**		Ø 14,29	-CF
	-07/81		R		**CF080**		Ø 15,87	Ch 81A0046051-, +/-CF
	78-		R		**CF000**		Ø 17,46	Ch -81A0046050, +CF
	78-				**PF058**		Ø 20,64	Ch -81C250000
1.2 Eng.FZ (44kW)	78-07/81		R		**CF001**		Ø 14,29	-CF
	-07/81		R		**CF080**		Ø 15,87	Ch 81A0046051-, +/-CF
	78-		R		**CF000**		Ø 17,46	Ch -81A0046050, +CF
	78-				**PF058**		Ø 20,64	Ch -81C250000
1.3 Eng.EP (44kW)	08/81-07/84		R		**CF001**		Ø 14,29	w/o handbrake
	08/81-07/84		R		**CF532**		Ø 14,29	Alu, w/o handbrake
	78-07/81		R		**CF001**		Ø 14,29	-CF
	78-07/81		R		**CF532**		Ø 14,29	Alu, -CF
	-07/81		R		**CF725**		Ø 15,87	Ch 81A0046051, Alu, +CF
	-07/81		R		**CF080**		Ø 15,87	Ch 81A0046051-, +CF
	08/81-07/84		R		**CF080**		Ø 15,87	FR
	08/81-07/84		R		**CF725**		Ø 15,87	Alu, FR
	78-		R		**CF000**		Ø 17,46	Ch -81A0046050, +CF
	78-		R		**CF239**		Ø 17,46	Ch -81A0046050, Alu, +CF
	78-				**PF058**		Ø 20,64	Ch -81C250000
1.6 Eng.DT (55kW)	08/81-07/84		R		**CF001**		Ø 14,29	w/o handbrake
	08/81-07/84		R		**CF532**		Ø 14,29	Alu, w/o handbrake
	78-07/81		R		**CF001**		Ø 14,29	-CF
	78-07/81		R		**CF532**		Ø 14,29	Alu, -CF
	-07/81		R		**CF725**		Ø 15,87	Ch 81A0046051, Alu, +CF
	-07/81		R		**CF080**		Ø 15,87	Ch 81A0046051-, +CF
	08/81-07/84		R		**CF080**		Ø 15,87	FR
	08/81-07/84		R		**CF725**		Ø 15,87	Alu, FR
	78-		R		**CF000**		Ø 17,46	Ch -81A0046050, +CF
	78-		R		**CF239**		Ø 17,46	Ch -81A0046050, Alu, +CF
	78-				**PF058**		Ø 20,64	Ch -81C250000
	8/84-86				**PF179**		Ø 20,64	
1.6 Eng.FS/ YN/ WV (55kW)	08/81-07/84		R		**CF001**		Ø 14,29	w/o handbrake
	08/81-07/84		R		**CF532**		Ø 14,29	Alu, w/o handbrake
	78-07/81		R		**CF001**		Ø 14,29	-CF
	78-07/81		R		**CF532**		Ø 14,29	Alu, -CF
	-07/81		R		**CF725**		Ø 15,87	Ch 81A0046051, Alu, +CF
	-07/81		R		**CF080**		Ø 15,87	Ch 81A0046051-, +CF
	08/81-07/84		R		**CF080**		Ø 15,87	FR
	08/81-07/84		R		**CF725**		Ø 15,87	Alu, FR
	78-		R		**CF000**		Ø 17,46	Ch -81A0046050, +CF
	78-		R		**CF239**		Ø 17,46	Ch -81A0046050, Alu, +CF
	78-				**PF058**		Ø 20,64	Ch -81C250000
	8/84-87				**PF179**		Ø 20,64	
1.6 Eng.SA (54kW)	86-		R		**CF000**		Ø 17,46	Ch -81A0046050, +CF
	86-		R		**CF239**		Ø 17,46	Ch -81A0046050, Alu, +CF
1.6 Eng.WZ (55kW)	79-80		R		**CF001**		Ø 14,29	-CF
	79-80		R		**CF532**		Ø 14,29	Alu, -CF
	-80		R		**CF725**		Ø 15,87	Ch 81A0046051, Alu, +CF
	-80		R		**CF080**		Ø 15,87	Ch 81A0046051-, +CF
	79-		R		**CF000**		Ø 17,46	Ch -81A0046050, +CF
	79-		R		**CF239**		Ø 17,46	Ch -81A0046050, Alu, +CF
1.6 Eng.YG/ YH/ YK (63kW)	78-80		R		**CF001**		Ø 14,29	-CF
	78-80		R		**CF532**		Ø 14,29	Alu, -CF
	-80		R		**CF725**		Ø 15,87	Ch 81A0046051, Alu, +CF
	-80		R		**CF080**		Ø 15,87	Ch 81A0046051-, +CF

AUDI

		Spare Parts	F/R	L/R	FRITECH ref.		DIMENSIONS mm.	NOTE
1.6 Eng.YG/ YH/ YK (63kW)	78-		R		**CF000**		Ø 17,46	Ch -81A0046050, +CF
	78-		R		**CF239**		Ø 17,46	Ch -81A0046050, Alu, +CF
1.6 Eng.YP (63kW)	08/81-02/83		R		**CF532**		Ø 14,29	Alu, w/o handbrake
	08/81-83		R		**CF001**		Ø 14,29	w/o handbrake
	78-07/81		R		**CF001**		Ø 14,29	-CF
	78-07/81		R		**CF532**		Ø 14,29	Alu, -CF
	-07/81		R		**CF725**		Ø 15,87	Ch 81A0046051, Alu, +CF
	-07/81		R		**CF080**		Ø 15,87	Ch 81A0046051-, +CF
	08/81-02/83		R		**CF080**		Ø 15,87	FR
	08/81-07/84		R		**CF725**		Ø 15,87	Alu, FR
	78-		R		**CF000**		Ø 17,46	Ch -81A0046050, +CF
	78-		R		**CF239**		Ø 17,46	Ch -81A0046050, Alu, +CF
	78-				**PF058**		Ø 20,64	Ch -81C250000
1.6 Eng.YT/ YY (51kW)	78-81		R		**CF121**	Vag	Ø 19,05	Alu, -ABS
	78-07/81		R		**CF001**		Ø 14,29	-CF
	78-07/81		R		**CF532**		Ø 14,29	Alu, -CF
	-07/81		R		**CF725**		Ø 15,87	Ch 81A0046051, Alu, +CF
	-07/81		R		**CF080**		Ø 15,87	Ch 81A0046051-, +CF
	78-		R		**CF000**		Ø 17,46	Ch -81A0046050, +CF
	78-		R		**CF239**		Ø 17,46	Ch -81A0046050, Alu, +CF
1.6 D Eng.CR (40kW)	-07/81		R		**CF532**		Ø 14,29	Alu, -CF
	08/81-07/84		R		**CF001**		Ø 14,29	w/o handbrake
	08/81-07/84		R		**CF532**		Ø 14,29	Alu, w/o handbrake
	80-07/81		R		**CF001**		Ø 14,29	-CF
	-07/81		R		**CF725**		Ø 15,87	Ch 81A0046051, Alu, +CF
	-07/81		R		**CF080**		Ø 15,87	Ch 81A0046051-, +CF
	08/81-07/84		R		**CF080**		Ø 15,87	FR
	08/81-07/84		R		**CF725**		Ø 15,87	Alu, FR
	80-		R		**CF000**		Ø 17,46	Ch -81A0046050, +CF
	80-		R		**CF239**		Ø 17,46	Ch -81A0046050, Alu, +CF
	80-				**PF058**		Ø 20,64	Ch -81C250000, Exc. Sweden, M/T, LHD
	8/84-86				**PF179**		Ø 20,64	
	80-86				**PF059**		Ø 20,64	M/T, RHD
	80-86				**PF060**		Ø 20,64	A/T
	80-86				**PF178**		Ø 20,64	Sweden, M/T, LHD
1.6 D Eng.JK (40kW)	-07/81		R		**CF532**		Ø 14,29	Alu, -CF
	08/81-07/84		R		**CF001**		Ø 14,29	w/o handbrake
	08/81-07/84		R		**CF532**		Ø 14,29	Alu, w/o handbrake
	80-07/81		R		**CF001**		Ø 14,29	-CF
	-07/81		R		**CF725**		Ø 15,87	Ch 81A0046051, Alu, +CF
	-07/81		R		**CF080**		Ø 15,87	Ch 81A0046051-, +CF
	08/81-07/84		R		**CF080**		Ø 15,87	FR
	08/81-07/84		R		**CF725**		Ø 15,87	Alu, FR
	80-		R		**CF000**		Ø 17,46	Ch -81A0046050, +CF
	80-		R		**CF239**		Ø 17,46	Ch -81A0046050, Alu, +CF
	80-				**PF058**		Ø 20,64	Ch -81C250000, Exc. Sweden, M/T, LHD
	8/84-86				**PF179**		Ø 20,64	
	80-86				**PF059**		Ø 20,64	M/T, RHD
	80-86				**PF060**		Ø 20,64	A/T
	80-86				**PF178**		Ø 20,64	Sweden, M/T, LHD
1.6 GLE Eng.YZ (81kW)	08/81-07/84		R		**CF001**		Ø 14,29	w/o handbrake
	08/81-07/84		R		**CF532**		Ø 14,29	Alu, w/o handbrake
	78-07/81		R		**CF532**		Ø 14,29	Alu, -CF
	79-07/81		R		**CF001**		Ø 14,29	-CF
	-07/81		R		**CF725**		Ø 15,87	Ch 81A0046051, Alu, +CF
	-07/81		R		**CF080**		Ø 15,87	Ch 81A0046051-, +CF
	08/81-07/84		R		**CF080**		Ø 15,87	FR
	08/81-07/84		R		**CF725**		Ø 15,87	Alu, FR
	79-		R		**CF000**		Ø 17,46	Ch -81A0046050, +CF
	79-		R		**CF239**		Ø 17,46	Ch -81A0046050, Alu, +CF
					PF178		Ø 20,64	Ch 81A0046051-81C250000, M/T, LHD, HDB
	80-81				**PF059**		Ø 20,64	M/T, RHD
	80-81				**PF060**		Ø 20,64	A/T

		Spare Parts	F/R	L/R	FRITECH ref.		DIMENSIONS mm.	NOTE
1.6 TD Eng.CY (51kW)	08/81-07/84		R		**CF001**		Ø 14,29	w/o handbrake
	08/81-07/84		R		**CF532**		Ø 14,29	Alu, w/o handbrake
	-81		R		**CF001**		Ø 14,29	-CF
	08/81-07/84		R		**CF080**		Ø 15,87	FR
	08/81-07/84		R		**CF725**		Ø 15,87	Alu, FR
	81-		R		**CF000**		Ø 17,46	Ch -81A0046050, +CF
	81-		R		**CF239**		Ø 17,46	Ch -81A0046050, Alu, +CF
	8/84-86				**PF179**		Ø 20,64	
	81-7/84				**PF178**		Ø 20,64	M/T, LHD
1.7 Eng.WT (58kW)	-07/81		R		**CF532**		Ø 14,29	Alu, -CF
	08/81-12/83		R		**CF532**		Ø 14,29	Alu, w/o handbrake
	08/81-83		R		**CF001**		Ø 14,29	w/o handbrake
	80-07/81		R		**CF001**		Ø 14,29	-CF
	-07/81		R		**CF725**		Ø 15,87	Ch 81A0046051, Alu, +CF
	-07/81		R		**CF080**		Ø 15,87	Ch 81A0046051-, +CF
	08/81-12/83		R		**CF080**		Ø 15,87	FR
	08/81-12/83		R		**CF725**		Ø 15,87	Alu, FR
	80-		R		**CF000**		Ø 17,46	Ch -81A0046050, +CF
	80-		R		**CF239**		Ø 17,46	Ch -81A0046050, Alu, +CF
1.8 Eng.DS (66kW)	-86		R		**CF001**		Ø 14,29	Ch 81D000001-, -CF
	01/83-07/84		R		**CF001**		Ø 14,29	w/o handbrake
	01/83-07/84		R		**CF532**		Ø 14,29	Alu, w/o handbrake
	-86		R		**CF080**		Ø 15,87	Ch 81D000001-, HDB
	01/83-07/84		R		**CF080**		Ø 15,87	FR
	01/83-07/84		R		**CF725**		Ø 15,87	Alu, FR
	83-86				**PF179**		Ø 20,64	
1.8 CC quattro Eng.NE (66kW)	-86		R		**CF001**		Ø 14,29	Ch 81D000001-, -CF
	-86		R		**CF080**		Ø 15,87	Ch 81D000001-, HDB
	8/84-86				**PF179**		Ø 20,64	
1.8 GTE, quattro Eng.DZ (82kW)	-86		R		**CF001**		Ø 14,29	Ch 81D000001-
	-86		R		**CF080**		Ø 15,87	Ch 81D000001-, HDB
	8/84-86				**PF179**		Ø 20,64	
1.8 GTE, quattro Eng.PV (81kW)	-86		R		**CF001**		Ø 14,29	Ch 81D000001-
	-86		R		**CF080**		Ø 15,87	Ch 81D000001-, HDB
	85-86				**PF179**		Ø 20,64	
1.8, quattro Eng.JN (68kW)	-7/84		R		**CF001**		Ø 14,29	Ch 81D000001-
	08/83-07/84		R		**CF001**		Ø 14,29	w/o handbrake
	08/83-07/84		R		**CF532**		Ø 14,29	Alu, w/o handbrake
	-86		R		**CF080**		Ø 15,87	Ch 81D000001-, HDB
	08/83-07/84		R		**CF080**		Ø 15,87	FR
	08/83-07/84		R		**CF725**		Ø 15,87	Alu, FR
	8/84-86				**PF179**		Ø 20,64	
1.9 CD-5S Eng.WN (85kW)	01/81-07/81		R		**CF001**		Ø 14,29	-CF
	81-83		R		**CF080**		Ø 15,87	HDB
	81-83				**PF178**		Ø 20,64	M/T, LHD
2.0, quattro Eng.HP/ JS (85kW)	10/83-07/84		R		**CF001**		Ø 14,29	w/o handbrake
	10/83-07/84		R		**CF532**		Ø 14,29	Alu, w/o handbrake
	-84		R		**CF080**		Ø 15,87	Ch 81D000001-, HDB
	10/83-07/84		R		**CF080**		Ø 15,87	FR
	10/83-07/84		R		**CF725**		Ø 15,87	Alu, FR
	83-84				**PF179**		Ø 20,64	
2.2 quattro Eng.KK (100kW)	08/82-07/84		R		**CF001**		Ø 14,29	w/o handbrake
	08/82-07/84		R		**CF532**		Ø 14,29	Alu, w/o handbrake
	08/82-07/84		R		**CF080**		Ø 15,87	FR
	08/82-07/84		R		**CF725**		Ø 15,87	Alu, FR
	82-		R		**CF000**		Ø 17,46	Ch -81A0046050, +CF
	82-		R		**CF239**		Ø 17,46	Ch -81A0046050, Alu, +CF
2.2 quattro Eng.KL (96kW)	08/82-07/84		R		**CF001**		Ø 14,29	w/o handbrake
	08/82-07/84		R		**CF532**		Ø 14,29	Alu, w/o handbrake
	08/82-07/84		R		**CF080**		Ø 15,87	FR
	08/82-07/84		R		**CF725**		Ø 15,87	Alu, FR
	82-		R		**CF000**		Ø 17,46	Ch -81A0046050, +CF
	82-		R		**CF239**		Ø 17,46	Ch -81A0046050, Alu, +CF

AUDI

		Spare Parts	F/R	L/R	FRITECH ref.		DIMENSIONS mm.	NOTE
2.2, quattro Eng.WE (85kW)	-07/81		R		**CF532**		Ø 14,29	Alu, -CF
	08/81-07/83		R		**CF532**		Ø 14,29	Alu, w/o handbrake
	08/81-83		R		**CF001**		Ø 14,29	w/o handbrake
	80-07/81		R		**CF001**		Ø 14,29	-CF
	-07/81		R		**CF725**		Ø 15,87	Ch 81A0046051, Alu, +CF
	-07/81		R		**CF080**		Ø 15,87	Ch 81A0046051-, +CF
	08/81-07/83		R		**CF080**		Ø 15,87	FR
	08/81-07/83		R		**CF725**		Ø 15,87	Alu, FR
	80-		R		**CF000**		Ø 17,46	Ch -81A0046050, +CF
	80-		R		**CF239**		Ø 17,46	Ch -81A0046050, Alu, +CF
	80-				**PF178**		Ø 20,64	Ch -81C250000, M/T, LHD, HDB
	80-81				**PF059**		Ø 20,64	M/T, RHD
	80-81				**PF060**		Ø 20,64	A/T
80 III (89, 89Q, 8A, B3) 8/86-7/92								
1.6 Eng.ABB (75kW)	90-91				**CZ036**	Fte	Ø 22,20	
1.6 Eng.PP (51kW)	87-91		R		**CF080**		Ø 15,87	+ABS, -CF
	87-91		R		**CF107**		Ø 19,05	+ABS, +CF
	87-91		R		**CF121**		Ø 19,05	Alu, +ABS, +CF
	87-91				**CZ036**	Fte	Ø 22,20	
1.6 Eng.RN (55kW)	9/86-91		R		**CF080**		Ø 15,87	+ABS, -CF
	9/86-91		R		**CF107**		Ø 19,05	+ABS, +CF
	9/86-91		R		**CF121**		Ø 19,05	Alu, +ABS, +CF
	86-91				**CZ036**	Fte	Ø 22,20	
1.6 D Eng.JK (40kW)	9/86-2/91		R		**CF080**		Ø 15,87	+ABS
	86-91				**CZ036**	Fte	Ø 22,20	
1.6 TD Eng.RA/ SB (59kW)	4/89-12/91		R		**CF107**		Ø 19,05	+ABS
	4/89-12/91		R		**CF121**		Ø 19,05	Alu, +ABS
	86-91				**CZ036**	Fte	Ø 22,20	
1.8 Eng.RU (55kW)	2/87-1/90		R		**CF080**		Ø 15,87	+ABS, M/T
	9/86-90		R		**CF107**		Ø 19,05	+ABS, A/T
	9/86-90		R		**CF121**		Ø 19,05	Alu, +ABS, A/T
	86-90				**CZ036**	Fte	Ø 22,20	
1.8 Eng.SD (83kW)	86-90				**CZ036**	Fte	Ø 22,20	
1.8 E Eng.DZ (82kW)	86-91				**CZ036**	Fte	Ø 22,20	
1.8 E quattro Eng.DZ (82kW)	86-91				**CZ036**	Fte	Ø 22,20	
1.8 quattro Eng.SD (83kW)	86-90				**CZ036**	Fte	Ø 22,20	
1.8 S Eng.JN/ NE/ PM (66kW)	9/86-12/91		R		**CF107**		Ø 19,05	+ABS, A/T
	9/86-12/91		R		**CF121**		Ø 19,05	Alu, +ABS, A/T
	86-91				**CZ036**	Fte	Ø 22,20	
1.8 S Eng.SF (65kW)	9/86-90		R		**CF107**		Ø 19,05	+ABS, A/T
	9/86-90		R		**CF121**		Ø 19,05	Alu, +ABS, A/T
	86-90				**CZ036**	Fte	Ø 22,20	
1.8 S quattro Eng.JN/ NE/ PM (66kW)	86-91				**CZ036**	Fte	Ø 22,20	
1.8 S quattro Eng.SF (65kW)	86-90				**CZ036**	Fte	Ø 22,20	
1.9	9/89-12/91		R		**CF107**		Ø 19,05	+ABS
	9/89-12/91		R		**CF121**		Ø 19,05	Alu, +ABS
1.9 D Eng.1Y (50kW)	9/89-12/91		R		**CF107**		Ø 19,05	+ABS
	9/89-12/91		R		**CF121**		Ø 19,05	Alu, +ABS
	89-91				**CZ036**	Fte	Ø 22,20	
1.9 quattro	9/89-12/91		R		**CF107**		Ø 19,05	+ABS
	9/89-12/91		R		**CF121**		Ø 19,05	Alu, +ABS
2.0 Eng.AAD (85kW)	90-91				**CZ036**	Fte	Ø 22,20	
2.0 E Eng.3A (82kW)	88-91				**CZ036**	Fte	Ø 22,20	
2.0 E 16v Eng.6A (101kW)	90-91				**CZ036**	Fte	Ø 22,20	
2.0 E 16v quattro Eng.6A (101kW)	90-91				**CZ036**	Fte	Ø 22,20	
2.0 E quattro Eng.3A (82kW)	88-91				**CZ036**	Fte	Ø 22,20	
2.0 quattro Eng.AAD (85kW)	90-91				**CZ036**	Fte	Ø 22,20	
80 IV (8C, B4), Avant 9/91-1/96								
1.6 Eng.ABM (52kW)	91-94		R		**CF239**	Vag	Ø 17,46	Alu
	2/92-		R		**CF000**		Ø 17,46	Ch -8CP050000
	91-94				**PF222**	Luc	Ø 23,81	Alu, +ABS
	91-94				**CZ036**	Fte	Ø 22,20	
1.6 E Eng.ADA (74kW)	91-96		R		**CF239**	Vag	Ø 17,46	Alu
	91-		R		**CF107**		Ø 19,05	Ch -8CN300000

		Spare Parts	F/R	L/R	FRITECH ref.		DIMENSIONS mm.	NOTE
1.6 E Eng.ADA (74kW)	91-		R		**CF121**		Ø 19,05	Ch -8CN300000, Alu
			R		**CF127**		Ø 20,64	Ch 8CP000001-8CP05000, Alu
	91-94				**PF222**	Luc	Ø 23,81	Alu, +ABS
					PF215	Luc	Ø 23,81	Ch 8CP000001-8CP05000, Alu, -ABS
	91-94				**CZ036**	Fte	Ø 22,20	
1.9 TD Eng.AAZ (55kW)	91-94		R		**CF239**	Vag	Ø 17,46	Alu
	91-		R		**CF000**		Ø 17,46	Ch -8CP050000
	8/91-		R		**CF121**		Ø 19,05	Ch -8CN300000, Alu
	91-94				**PF222**	Luc	Ø 23,81	Alu, +ABS
	91-94				**CZ036**	Fte	Ø 22,20	
1.9 TDi Eng.1Z (66kW)	91-96		R		**CF239**	Vag	Ø 17,46	Alu
	8/91-		R		**CF107**		Ø 19,05	Ch -8CN300000
	8/91-		R		**CF121**		Ø 19,05	Ch -8CN300000, Alu
			R		**CF127**		Ø 20,64	Ch 8CP000001-8CP05000, Alu
	9/91-94				**PF222**	Luc	Ø 23,81	Alu, +ABS
					PF215	Luc	Ø 23,81	Ch 8CP000001-8CP05000, Alu, -ABS
	91-96				**CZ036**	Fte	Ø 22,20	
2.0 Eng.ABT (66kW)	8/91-		R		**CF107**		Ø 19,05	Ch -8CN300000
	8/91-		R		**CF121**		Ø 19,05	Ch -8CN300000, Alu
			R		**CF127**		Ø 20,64	Ch 8CP000001-8CP05000, Alu
					PF215	Luc	Ø 23,81	Ch 8CP000001-8CP05000, Alu, -ABS
	91-96				**CZ036**	Fte	Ø 22,20	
2.0 Eng.ADW (79kW)	93-		R		**CF121**		Ø 19,05	Ch -8CN300000, Alu
2.0 E Eng.ABK (85kW)	91-94				**PF222**	Luc	Ø 23,81	Alu, +ABS
	91-96				**CZ036**	Fte	Ø 22,20	
2.0 E 16v Eng.ACE (103kW)	92-94				**PF222**	Luc	Ø 23,81	Alu, +ABS
	-94				**PF215**	Luc	Ø 23,81	Ch 8CP000001-, Alu, -ABS
	92-96				**CZ036**	Fte	Ø 22,20	
2.0 E 16v quattro Eng.ACE (103kW)	91-94				**PF222**	Luc	Ø 23,81	Alu, +ABS
	-94				**PF215**	Luc	Ø 23,81	Ch 8CP000001-, Alu, -ABS
	92-96				**CZ036**	Fte	Ø 22,20	
2.0 E quattro Eng.ABK (85kW)	-94				**PF215**	Luc	Ø 23,81	Ch 8CP000001-, Alu
	91-96				**CZ036**	Fte	Ø 22,20	
2.2 RS2 quattro Avant Eng.ADU (232kW)	94-95				**CZ036**	Fte	Ø 22,20	
2.2 S2 quattro Eng.ABY (169kW)	93-95				**CZ036**	Fte	Ø 22,20	
2.3 E Eng.NG (98kW)	91-94				**PF222**	Luc	Ø 23,81	Alu, +ABS
	-94				**PF215**	Luc	Ø 23,81	Ch 8CP000001-, Alu, -ABS
	91-96				**CZ036**	Fte	Ø 22,20	
2.3 E quattro Eng.NG (98kW)	-94				**PF215**	Luc	Ø 23,81	Ch 8CP000001-, Alu, -ABS
	91-96				**CZ036**	Fte	Ø 22,20	
2.6 Eng.ABC (110kW)	7/92-94				**PF222**	Luc	Ø 23,81	Alu, +ABS
	7/92-94				**PF215**	Luc	Ø 23,81	Alu, -ABS
	92-96				**CZ036**	Fte	Ø 22,20	
2.6 quattro Eng.ABC (110kW)	7/92-94				**PF222**	Luc	Ø 23,81	Alu, +ABS
	7/92-94				**PF215**	Luc	Ø 23,81	Alu, -ABS
	92-96				**CZ036**	Fte	Ø 22,20	
2.8 Eng.AAH (128kW)	9/91-94				**PF222**	Luc	Ø 23,81	Alu, +ABS
	92-94				**PF215**	Luc	Ø 23,81	Alu, -ABS
	91-96				**CZ036**	Fte	Ø 22,20	
2.8 quattro Eng.AAH (128kW)	91-96				**CZ036**	Fte	Ø 22,20	
90 I (81, 85, B2) 10/84-3/87								
1.6 TD Eng.CY (51kW)	85-7/86		R		**CF000**		Ø 17,46	
	85-7/86				**PF179**		Ø 20,64	
2.0 Eng.SK (83kW)	86-87		R		**CF000**		Ø 17,46	
	86-87				**PF179**		Ø 20,64	
2.0, quattro Eng.HP/ JS (85kW)	8/84-8/87		R		**CF000**		Ø 17,46	
	8/84-8/87				**PF179**		Ø 20,64	
2.2 Eng.HY/ KV (100kW)	5/84-8/87		R		**CF000**		Ø 17,46	
	5/84-8/87				**PF179**		Ø 20,64	
2.2 Eng.KX (85kW)	84-87		R		**CF000**		Ø 17,46	
	84-87				**PF179**		Ø 20,64	
90 II (89, 89Q, 8A, B3) 4/87-9/91								
1.6 TD Eng.RA/ SB (59kW)	87-91		R		**CF107**	Fte	Ø 19,05	
	87-91		R		**CF121**		Ø 19,05	Alu, -ABS

AUDI

		Spare Parts	F/R	L/R	FRITECH ref.		DIMENSIONS mm.	NOTE
1.6 TD Eng.RA/ SB (59kW)	87-91				**CZ036**	Fte	Ø 22,20	
2.0 Eng.PS (85kW)	88-91				**CZ036**	Fte	Ø 22,20	
2.0 20v Eng.NM (118kW)	88-91				**CZ036**	Fte	Ø 22,20	
2.0 20v quattro Eng.NM (118kW)	88-91				**CZ036**	Fte	Ø 22,20	
2.2 E Eng.KV (100kW)	87-91				**CZ036**	Fte	Ø 22,20	
2.2 E quattro Eng.KV (100kW)	87-91				**CZ036**	Fte	Ø 22,20	
2.3 E Eng.NG (100kW)	87-91				**CZ036**	Fte	Ø 22,20	
2.3 E Eng.NG (98kW)	87-91				**CZ036**	Fte	Ø 22,20	
2.3 E 20v Eng.7A (123-125kW)	88-91				**CZ036**	Fte	Ø 22,20	
2.3 E 20v quattro Eng.7A (123-125kW)	88-91				**CZ036**	Fte	Ø 22,20	
2.3 E quattro Eng.NG (100kW)	87-91				**CZ036**	Fte	Ø 22,20	
2.3 E quattro Eng.NG (98kW)	87-91				**CZ036**	Fte	Ø 22,20	
A1 I (8X1, 2, A), Sportback 5/10-10/14								
1.2 TFSi Eng.CBZA (63kW)	10-				**CZ086**	Fte	Ø 19,05	Pla
	10-				**CZ098**	Fte	Ø 19,05	Alu
1.4 TFSi Eng.CAXA, CNVA (90kW)	10-				**CZ086**	Fte	Ø 19,05	Pla
	10-				**CZ098**	Fte	Ø 19,05	Alu
1.6 TDi Eng.CAYB (66kW)	11-				**CZ086**	Fte	Ø 19,05	Pla
	11-				**CZ098**	Fte	Ø 19,05	Alu
1.6 TDi Eng.CAYC (77kW)	10-				**CZ086**	Fte	Ø 19,05	Pla
	10-				**CZ098**	Fte	Ø 19,05	Alu
A1 II, Sportback 11/14-								
1.6 TDi Eng.CXMA (85kW)	14-				**CZ086**	Fte	Ø 19,05	Pla
	14-				**CZ098**	Fte	Ø 19,05	Alu
A2 (8Z0) 2/00-8/05								
1.2 TDi Eng.ANY (45kW)	3/01-		R		**CF080**		Ø 15,87	
	3/01-		R		**CF725**		Ø 15,87	Alu
	3/01-				**PF533**	Ate	Ø 22,20	Ch -8Z2013000, Alu
					PF535	Ate	Ø 22,20	Ch 8Z2013001-8Z3019000, Alu
	-7/05				**PF827**	Ate	Ø 22,20	Ch 8Z3019001-, Alu
1.4 Eng.AUA/ BBY (55kW)	00-		R		**CF239**		Ø 17,46	Alu
					PF533	Ate	Ø 22,20	Ch -8Z2013000, Alu
					PF535	Ate	Ø 22,20	Ch 8Z2013001-8Z3019000, Alu
	-7/05				**PF827**	Ate	Ø 22,20	Ch 8Z3019001-, Alu
	00-				**CZ077**	Fte	Ø 19,05	Ch -8Z2011846, Pla
	00-				**CZ099**	Fte	Ø 19,05	Ch -8Z2011846
1.4 TDi Eng.AMF/ BHC (55kW)	00-		R		**CF239**		Ø 17,46	Alu
	00-				**PF533**	Ate	Ø 22,20	Ch -8Z2013000, Alu
					PF535	Ate	Ø 22,20	Ch 8Z2013001-8Z3019000, Alu
	-7/05				**PF827**	Ate	Ø 22,20	Ch 8Z3019001-, Alu
	00-				**CZ086**	Fte	Ø 19,05	Pla
	00-				**CZ098**	Fte	Ø 19,05	Alu
1.4 TDi Eng.ATL (66kW)	-7/05				**PF827**	Ate	Ø 22,20	Ch 8Z3019001-, Alu
1.6 FSI Eng.BAD (81kW)	5/02-				**PF535**	Ate	Ø 22,20	Ch -8Z3019000, Alu
	-7/05				**PF827**	Ate	Ø 22,20	Ch 8Z3019001-, Alu
A3 I (8L1) 9/96-4/03								
1.6 Eng.AEH/ AKL/ APF (74kW)	96-00				**PF241**	Ate	Ø 23,81	Alu, +ESP, LHD
	96-00				**PF818**	Bch	Ø 23,81	Alu, -ESP, RHD
	96-00				**PF234**		Ø 23,81	-ESP, LHD
	96-00				**CZ081**	Fte	Ø 23,81	Alu
	96-00				**CZ026**		Ø 23,81	Pla
	96-00				**PZ064**	Sachs	Ø 15,87	Pla
	96-00				**PZ107**	Sachs	Ø 15,87	
1.6 Eng.AVU/ BFQ (75kW)	8/00-				**PF799**	Ate	Ø 23,81	Alu, +ESP, LHD
	8/00-				**PF818**	Bch	Ø 23,81	Alu, -ESP, RHD
	8/00-				**PF234**		Ø 23,81	-ESP, LHD
	8/00-				**CZ081**	Fte	Ø 23,81	Alu
	8/00-				**CZ026**		Ø 23,81	Pla
	8/00-				**PZ064**	Sachs	Ø 15,87	Pla
	8/00-				**PZ107**	Sachs	Ø 15,87	
1.8 S3 quattro Eng.AMK/ APY/ AUL (154kW)	00-03				**PF799**	Ate	Ø 23,81	Alu, +ESP, LHD
	99-00				**PF241**	Ate	Ø 23,81	Alu, +ESP, LHD
	99-6/03				**PF818**	Bch	Ø 23,81	Alu, -ESP, RHD
	99-6/03				**PF234**		Ø 23,81	-ESP, LHD

		Spare Parts	F/R	L/R	FRITECH ref.		DIMENSIONS mm.	NOTE
1.8 S3 quattro Eng.AMK/ APY/ AUL (154kW)	3/99-				**PZ064**	Sachs	Ø 15,87	Pla
	3/99-				**PZ107**	Sachs	Ø 15,87	
1.8 S3 quattro Eng.BAM (165kW)	01-03				**PF799**	Ate	Ø 23,81	Alu, +ESP, LHD
	01-6/03				**PF818**	Bch	Ø 23,81	Alu, -ESP, RHD
	01-6/03				**PF234**		Ø 23,81	-ESP, LHD
	01-				**PZ064**	Sachs	Ø 15,87	Pla
	01-				**PZ107**	Sachs	Ø 15,87	
1.8 T, quattro Eng.AGU/ AQA/ ARZ/ ARX/ AUM (110kW)	00-03				**PF799**	Ate	Ø 23,81	Alu, +ESP, LHD
	9/96-00				**PF241**	Ate	Ø 23,81	Alu, +ESP, LHD
	9/96-6/03				**PF818**	Bch	Ø 23,81	Alu, -ESP, RHD
	9/96-6/03				**PF234**		Ø 23,81	-ESP, LHD
	12/96-4/03				**CZ076**		Ø 19,05	
	96-				**PZ064**	Sachs	Ø 15,87	Pla
	96-				**PZ107**	Sachs	Ø 15,87	
1.8 T, quattro Eng.AJL (132kW)	00-03				**PF799**	Ate	Ø 23,81	Alu, +ESP, LHD
	00-6/03				**PF818**	Bch	Ø 23,81	Alu, -ESP, RHD
	00-6/03				**PF234**		Ø 23,81	-ESP, LHD
1.8 T, quattro Eng.AJQ/ APP/ ARY/ AUQ (132kW)	00-03				**PF799**	Ate	Ø 23,81	Alu, +ESP, LHD
	98-00				**PF241**	Ate	Ø 23,81	Alu, +ESP, LHD
	98-6/03				**PF818**	Bch	Ø 23,81	Alu, -ESP, RHD
	98-6/03				**PF234**		Ø 23,81	-ESP, LHD
	12/98-4/03				**CZ076**		Ø 19,05	
	98-				**PZ064**	Sachs	Ø 15,87	Pla
	98-				**PZ107**	Sachs	Ø 15,87	
1.8, quattro Eng.AGN/ APG (92kW)	00-03				**PF799**	Ate	Ø 23,81	Alu, +ESP, LHD
	9/96-00				**PF241**	Ate	Ø 23,81	Alu, +ESP, LHD
	9/96-6/03				**PF818**	Bch	Ø 23,81	Alu, -ESP, RHD
	9/96-6/03				**PF234**		Ø 23,81	-ESP, LHD
	9/96-4/03				**CZ076**		Ø 19,05	
	96-				**PZ064**	Sachs	Ø 15,87	Pla
	96-				**PZ107**	Sachs	Ø 15,87	
1.9 TDi Eng.AGR/ ALH (66kW)	00-01				**PF799**	Ate	Ø 23,81	Alu, +ESP, LHD
	9/96-00				**PF241**	Ate	Ø 23,81	Alu, +ESP, LHD
	9/96-				**PF818**	Bch	Ø 23,81	Alu, -ESP, RHD
	9/96-				**PF234**		Ø 23,81	-ESP, LHD
	9/96-7/01				**CZ076**		Ø 19,05	
	96-				**PZ064**	Sachs	Ø 15,87	Pla
	96-				**PZ107**	Sachs	Ø 15,87	
1.9 TDi Eng.AHF/ ASV (81kW)	00-01				**PF799**	Ate	Ø 23,81	Alu, +ESP, LHD
	8/97-00				**PF241**	Ate	Ø 23,81	Alu, +ESP, LHD
	97-01				**PF818**	Bch	Ø 23,81	Alu, -ESP, RHD
	97-01				**PF234**		Ø 23,81	-ESP, LHD
	8/97-7/01				**CZ076**		Ø 19,05	
	97-01				**PZ064**	Sachs	Ø 15,87	Pla
	97-01				**PZ107**	Sachs	Ø 15,87	
1.9 TDi Eng.ATD/ AXR (74kW)	00-03				**PF799**	Ate	Ø 23,81	Alu, +ESP, LHD
	00-6/03				**PF818**	Bch	Ø 23,81	Alu, -ESP, RHD
	00-6/03				**PF234**		Ø 23,81	-ESP, LHD
	10/00-4/03				**CZ076**		Ø 19,05	
	00-				**PZ064**	Sachs	Ø 15,87	Pla
	00-				**PZ107**	Sachs	Ø 15,87	
1.9 TDi, quattro Eng.ASZ (96kW)	00-03				**PF241**	Ate	Ø 23,81	Alu, +ESP, LHD, 4 Connections
	00-03				**PF799**	Ate	Ø 23,81	Alu, +ESP, LHD, 3 Connections
	00-03				**PF818**	Bch	Ø 23,81	Alu, -ESP, RHD
	00-03				**PF234**		Ø 23,81	-ESP, LHD
	00-03				**PZ064**	Sachs	Ø 15,87	Pla
	00-03				**PZ107**	Sachs	Ø 15,87	
A3 II (8P1), Sportback 5/03-8/12								
1.2 TSi Eng.CBZB (77kW)	10-				**PF869**	Ate	Ø 22,20	Alu
	10-				**PF870**	Bch	Ø 22,20	Alu
	10-				**CZ080**	Sachs	Ø 19,05	Alu, M/T
1.4 16v TFSi Eng.CMSA/ CAXC (92kW)	08-				**PF869**	Ate	Ø 22,20	Alu
	08-				**CZ080**	Sachs	Ø 19,05	Alu, M/T

AUDI

		Spare Parts	F/R	L/R	FRITECH ref.		DIMENSIONS mm.	NOTE
1.6 Eng.BGU/ BSE/ BSF/ CCSA/ CMXA (75kW)	03-				**PF647**	Ate	Ø 22,20	Ch -8P6A094000, Alu
	03-				**PF869**	Ate	Ø 22,20	Ch 8P6A094001-, Alu
	03-				**PF646**	Bch	Ø 22,20	Ch -8P6A094000, Alu
	03-				**PF870**	Bch	Ø 22,20	Ch 8P6A094001-, Alu
	03-				**CZ077**	Fte	Ø 19,05	Pla
	03-				**CZ099**	Fte	Ø 19,05	
	03-				**CZ080**	Sachs	Ø 19,05	Alu, M/T
1.6 E-Power Eng.CMXA (75kW)	11-				**PF869**	Ate	Ø 22,20	Alu
	11-				**PF870**	Bch	Ø 22,20	Alu
	11-				**CZ080**	Sachs	Ø 19,05	Alu, M/T
1.6 FSI Eng.BAG/ BLF/ BLP (85kW)	03-				**PF647**	Ate	Ø 22,20	Ch -8P6A094000, Alu
	03-				**PF869**	Ate	Ø 22,20	Ch 8P6A094001-, Alu
	03-				**PF646**	Bch	Ø 22,20	Ch -8P6A094000, Alu
	03-				**PF870**	Bch	Ø 22,20	Ch 8P6A094001-, Alu
	03-				**CZ077**	Fte	Ø 19,05	Pla
	03-				**CZ099**	Fte	Ø 19,05	
	03-				**CZ080**	Sachs	Ø 19,05	Alu, M/T
1.6 TDi Eng.CAYB (66kW)	09-				**PF869**	Ate	Ø 22,20	Alu
	09-				**PF870**	Bch	Ø 22,20	Alu
	09-				**CZ080**	Sachs	Ø 19,05	Alu, M/T
1.6 TDi Eng.CAYC (77kW)	09-				**PF869**	Ate	Ø 22,20	Alu
	09-				**PF870**	Bch	Ø 22,20	Alu
	09-				**CZ080**	Sachs	Ø 19,05	Alu, M/T
1.8 16v TFSi, quattro Eng.BYT/ BZB/ CDAA	07-				**PF647**	Ate	Ø 22,20	Ch -8P6A094000, Alu
(118kW)	07-				**PF869**	Ate	Ø 22,20	Ch 8P6A094001-, Alu
	07-				**PF646**	Bch	Ø 22,20	Ch -8P6A094000, Alu
	07-				**PF870**	Bch	Ø 22,20	Ch 8P6A094001-, Alu
	07-				**CZ080**	Sachs	Ø 19,05	Alu, M/T
1.9 TDi Eng.BLS/ BKC/ BXE (77kW)	03-				**PF647**	Ate	Ø 22,20	Ch -8P6A094000, Alu
	03-				**PF869**	Ate	Ø 22,20	Ch 8P6A094001-, Alu
	03-				**PF646**	Bch	Ø 22,20	Ch -8P6A094000, Alu
	03-				**PF870**	Bch	Ø 22,20	Ch 8P6A094001-, Alu
	06/03-				**CZ080**	Sachs	Ø 19,05	Alu, M/T
2.0 FSI Eng.AXW/ BHD/ BLR/ BLX/ BLY/ BMB/	03-				**PF647**	Ate	Ø 22,20	Ch -8P6A094000, Alu
BVY/ BVZ (110kW)	03-				**PF869**	Ate	Ø 22,20	Ch 8P6A094001-, Alu
	03-				**PF646**	Bch	Ø 22,20	Ch -8P6A094000, Alu
	03-				**PF870**	Bch	Ø 22,20	Ch 8P6A094001-, Alu
	03-				**CZ080**	Sachs	Ø 19,05	Alu, M/T
2.0 TDi Eng.BUY (120kW)	06-				**PF869**	Ate	Ø 22,20	Ch 8P6A094001-, Alu
	06-				**PF870**	Bch	Ø 22,20	Ch 8P6A094001-, Alu
	11/06-				**CZ080**	Sachs	Ø 19,05	Alu, M/T
2.0 TDi, quattro Eng.AZV/ CBAA/ CFFA (100kW)	03-				**PF647**	Ate	Ø 22,20	Ch -8P6A094000, Alu
	03-				**PF869**	Ate	Ø 22,20	Ch 8P6A094001-, Alu
	03-				**PF646**	Bch	Ø 22,20	Ch -8P6A094000, Alu
	03-				**PF870**	Bch	Ø 22,20	Ch 8P6A094001-, Alu
	03-				**CZ080**	Sachs	Ø 19,05	Alu, M/T
2.0 TDi, quattro Eng.BKD/ CBAB/ CFFB (103kW)	03-				**PF647**	Ate	Ø 22,20	Ch -8P6A094000, Alu
	03-				**PF869**	Ate	Ø 22,20	Ch 8P6A094001-, Alu
	03-				**PF646**	Bch	Ø 22,20	Ch -8P6A094000, Alu
	03-				**PF870**	Bch	Ø 22,20	Ch 8P6A094001-, Alu
	03-				**CZ080**	Sachs	Ø 19,05	Alu, M/T
2.0 TDi, quattro Eng.BMN/ CBBB/ CFGB (125kW)	06-				**PF647**	Ate	Ø 22,20	Ch -8P6A094000, Alu
	06-				**PF869**	Ate	Ø 22,20	Ch 8P6A094001-, Alu
	06-				**PF870**	Bch	Ø 22,20	Ch 8P6A094001-, Alu
	06-				**CZ080**	Sachs	Ø 19,05	Alu, M/T
2.0 TDi, quattro, Sportback Eng.BMM (103kW)	05-				**PF647**	Ate	Ø 22,20	Ch -8P6A094000, Alu
	05-				**PF869**	Ate	Ø 22,20	Ch 8P6A094001-, Alu
	05-				**PF870**	Bch	Ø 22,20	Ch 8P6A094001-, Alu
	05-				**CZ080**	Sachs	Ø 19,05	Alu, M/T
2.0 TFSI, quattro Eng.AXX/ BWA/ CAWB/ CBFA/	04-				**PF647**	Ate	Ø 22,20	Ch -8P6A094000, Alu
CCZA (147kW)	04-				**PF869**	Ate	Ø 22,20	Ch 8P6A094001-, Alu
	04-				**PF870**	Bch	Ø 22,20	Ch 8P6A094001-, Alu
	04-				**CZ080**	Sachs	Ø 19,05	Alu, M/T

		Spare Parts	F/R	L/R	FRITECH ref.		DIMENSIONS mm.	NOTE
3.2, quattro Eng.BDB/ BMJ/ BUB (184kW)	03-				**PF647**	Ate	Ø 22,20	Ch -8P6A094000, Alu
	03-				**CZ080**	Sachs	Ø 19,05	Alu, M/T
S3 2.0 16v TFSI quattro Eng.BHZ/ CDLA (195kW)	06-				**CZ080**	Sachs	Ø 19,05	Alu, M/T
S3 quattro Eng.BZC/ CDLC (188kW)	7/08-				**CZ080**	Sachs	Ø 19,05	Alu, M/T
A3 II Cabrio 4/08-5/13								
1.2 TFSi Eng.CBZB (77kW)	10-				**PF869**	Ate	Ø 22,20	Alu
	10-7/11				**CZ080**	Sachs	Ø 19,05	Alu, Cod. ID PR 0EJ
1.4 TFSi Eng.CAXC (92kW)	11-				**PF869**	Ate	Ø 22,20	Alu
	2/11-7/11				**CZ080**	Sachs	Ø 19,05	Alu, Cod. ID PR 0EJ
1.6 Eng.BSE (75kW)	08-				**PF869**	Ate	Ø 22,20	Alu
	08-				**PF870**	Bch	Ø 22,20	Alu
	08-7/11				**CZ080**	Sachs	Ø 19,05	Alu, Cod. ID PR 0EJ
1.6 TDi Eng.CAYC (77kW)	09-				**PF869**	Ate	Ø 22,20	Alu
	09-7/11				**CZ080**	Sachs	Ø 19,05	Alu, Cod. ID PR 0EJ
1.8 16v TFSi Eng.BYT/ BZB/ CDAA (118kW)	08-				**PF869**	Ate	Ø 22,20	Alu
	08-				**PF870**	Bch	Ø 22,20	Alu
	08-7/11				**CZ080**	Sachs	Ø 19,05	Alu, Cod. ID PR 0EJ
1.9 TDi Eng.BLS/ BKC/ BXE (77kW)	08-				**PF869**	Ate	Ø 22,20	Alu
	08-				**PF870**	Bch	Ø 22,20	Alu
	08-7/11				**CZ080**	Sachs	Ø 19,05	Alu, Cod. ID PR 0EJ
2.0 16v TFSi Eng.AXX/ BWA/ CAWB/ CCTA	08-				**PF869**	Ate	Ø 22,20	Alu
(147kW)	08-				**PF870**	Bch	Ø 22,20	Alu
	08-7/11				**CZ080**	Sachs	Ø 19,05	Alu, Cod. ID PR 0EJ
2.0 TDi Eng.CBAA/ CFFA (100kW)	08-7/11				**CZ080**	Sachs	Ø 19,05	Alu, Cod. ID PR 0EJ
2.0 TDi Eng.CBAB/ CFFB (103kW)	08-				**PF869**	Ate	Ø 22,20	Alu
	08-				**PF870**	Bch	Ø 22,20	Alu
	08-7/11				**CZ080**	Sachs	Ø 19,05	Alu, Cod. ID PR 0EJ
A3 III (8V1),Sportback(8VA),Sedan(8VS),Cabrio(8V7) 4/12-								
1.4 TFSI Eng.CMBA/ CXSA (90kW)	12-				**CZ080**	Sachs	Ø 19,05	Alu
1.4 TFSI Eng.CPTA (103kW)	12-				**CZ080**	Sachs	Ø 19,05	Alu
1.6 TDI Eng.CLHA (77kW)	12-				**CZ080**	Sachs	Ø 19,05	Alu
1.8 TFSI, quattro Eng.CJSA/ CJSB (132kW)	12-				**CZ080**	Sachs	Ø 19,05	Alu
2.0 TDI Eng.CRFA (81kW)	12-				**CZ080**	Sachs	Ø 19,05	Alu
2.0 TDI Eng.CRFC (105kW)	12-				**CZ080**	Sachs	Ø 19,05	Alu
2.0 TDI, Quattro Eng.CRBC/ CRLB (110kW)	12-				**CZ080**	Sachs	Ø 19,05	Alu
2.0 TDI, Quattro Eng.CUPA (135kW)	12-				**CZ080**	Sachs	Ø 19,05	Alu
2.0 TFSi S3 quattro Eng.CJXC (221kW)	12-				**CZ080**	Sachs	Ø 19,05	Alu
A4 I (8D2, B5), Avant 1/95-9/01								
1.6 Eng.ADP (74kW)	2/99-7/00				**PF277**	Luc	Ø 25,40	Alu, +ABS, +ESP, LHD
	95-1/99				**PF223**	Luc	Ø 23,81	+ABS, -ESP, LHD
	2/99-7/00				**PF492**	Luc	Ø 25,40	+ABS, -ESP, LHD
	2/99-11/00				**PF278**	Luc	Ø 25,40	Alu, RHD
	1/95-				**CZ052**	Sachs	Ø 22,20	Ch -8DZV180000, Alu
	1/95-				**CZ097**	Sachs	Ø 22,20	Ch -8DZV180000
					CZ074	Sachs	Ø 22,20	Ch 8DZV180001-, Pla
					CZ096	Sachs	Ø 22,20	Ch 8DZV180001-
					PZ085	Sachs	Ø 19,05	Ch 8DVZ180001-, Pla
					PZ105	Sachs	Ø 19,05	Ch 8DVZ180001-, Alu
	95-				**PZ076**	Sachs	Ø 19,05	Ch -8DZV180000, Alu
	95-				**PZ106**	Sachs	Ø 19,05	Ch -8DZV180000, Alu
1.6i Eng.AHL/ ANA/ ARM (74kW)	2/99-7/00				**PF277**	Luc	Ø 25,40	Alu, +ABS, +ESP, LHD
	95-1/99				**PF223**	Luc	Ø 23,81	+ABS, -ESP, LHD
	2/99-7/00				**PF492**	Luc	Ø 25,40	+ABS, -ESP, LHD
	2/99-11/00				**PF278**	Luc	Ø 25,40	Alu, RHD
	1/95-				**CZ052**	Sachs	Ø 22,20	Ch -8DZV180000, Alu
	1/95-				**CZ097**	Sachs	Ø 22,20	Ch -8DZV180000
					CZ074	Sachs	Ø 22,20	Ch 8DZV180001-, Pla
					CZ096	Sachs	Ø 22,20	Ch 8DZV180001-
					PZ085	Sachs	Ø 19,05	Ch 8DVZ180001-, Pla
					PZ105	Sachs	Ø 19,05	Ch 8DVZ180001-, Alu
	95-				**PZ076**	Sachs	Ø 19,05	Ch -8DZV180000, Alu
	95-				**PZ106**	Sachs	Ø 19,05	Ch -8DZV180000, Alu
1.6i Eng.ALZ (75kW)	7/00-11/00				**PF277**	Luc	Ø 25,40	Alu, +ABS, +ESP, LHD
	7/00-11/00				**PF492**	Luc	Ø 25,40	+ABS, -ESP

AUDI

		Spare Parts	F/R	L/R	FRITECH ref.		DIMENSIONS mm.	NOTE
1.6i Eng.ALZ (75kW)	7/00-11/00				**CZ074**	Sachs	Ø 22,20	Ch 8DZV180001-, Pla
	7/00-11/00				**CZ096**	Sachs	Ø 22,20	Ch 8DZV180001-
	7/00-11/00				**PZ085**	Sachs	Ø 19,05	Ch 8DVZ180001-, Pla
	7/00-11/00				**PZ105**	Sachs	Ø 19,05	Ch 8DVZ180001-, Alu
1.8 Eng.AFY (85kW)	2/99-4/01				**PF277**	Luc	Ø 25,40	Alu, +ABS, +ESP
	95-1/99				**PF223**	Luc	Ø 23,81	+ABS, -ESP
	2/99-01				**PF492**	Luc	Ø 25,40	+ABS, -ESP
	1/95-				**CZ052**	Sachs	Ø 22,20	Ch -8DZV180000, Alu
	1/95-				**CZ097**	Sachs	Ø 22,20	Ch -8DZV180000
					CZ074	Sachs	Ø 22,20	Ch 8DZV180001-, Pla
					CZ096	Sachs	Ø 22,20	Ch 8DZV180001-
	95-				**PZ076**	Sachs	Ø 19,05	Ch -8DV180000, Alu
	95-				**PZ106**	Sachs	Ø 19,05	Ch -8DV180000, Alu
	0				**PZ105**	Sachs	Ø 19,05	Ch 8DVZ180001-, Alu
	-00				**PZ085**	Sachs	Ø 19,05	Ch 8DVZ180001-, Pla
1.8 Eng.APT/ ARG/ AVV (92kW)	2/99-4/01				**PF277**	Luc	Ø 25,40	Alu, +ABS, +ESP, LHD
	1/95-1/99				**PF223**	Luc	Ø 23,81	+ABS, -ESP, LHD
	2/99-4/01				**PF492**	Luc	Ø 25,40	+ABS, -ESP, LHD
	2/99-11/00				**PF278**	Luc	Ø 25,40	Alu, RHD
	1/95-				**CZ052**	Sachs	Ø 22,20	Ch -8DZV180000, Alu
	1/95-				**CZ097**	Sachs	Ø 22,20	Ch -8DZV180000
					CZ074	Sachs	Ø 22,20	Ch 8DZV180001-, Pla
					CZ096	Sachs	Ø 22,20	Ch 8DZV180001-
					PZ085	Sachs	Ø 19,05	Ch 8DVZ180001-, Pla
					PZ105	Sachs	Ø 19,05	Ch 8DVZ180001-, Alu
	95-				**PZ076**	Sachs	Ø 19,05	Ch -8DZV180000, Alu
	95-				**PZ106**	Sachs	Ø 19,05	Ch -8DZV180000, Alu
1.8 (Exc. Avant) Eng.ADR (95kW)	1/95-				**CZ052**	Sachs	Ø 22,20	Ch -8DZV180000, Alu
	1/95-				**CZ097**	Sachs	Ø 22,20	Ch -8DZV180000
					CZ074	Sachs	Ø 22,20	Ch 8DZV180001-, Pla
					CZ096	Sachs	Ø 22,20	Ch 8DZV180001-
	95-				**PZ076**	Sachs	Ø 19,05	Ch 8DV180000, Alu
	95-				**PZ106**	Sachs	Ø 19,05	Ch 8DV180000, Alu
	0				**PZ105**	Sachs	Ø 19,05	Ch 8DVZ180001-, Alu
	-00				**PZ085**	Sachs	Ø 19,05	Ch 8DVZ180001-, Pla
1.8 quattro Eng.AFY (85kW)	95-1/99				**PF383**	Luc	Ø 23,81	Alu, +ABS, +ESP
	2/99-4/01				**PF277**	Luc	Ø 25,40	Alu, +ABS, +ESP
	95-1/99				**PF223**	Luc	Ø 23,81	+ABS, -ESP
	2/99-01				**PF492**	Luc	Ø 25,40	+ABS, -ESP
	1/95-				**CZ052**	Sachs	Ø 22,20	Ch -8DZV277328, Alu
	1/95-				**CZ097**	Sachs	Ø 22,20	Ch -8DZV277328
					CZ074	Sachs	Ø 22,20	Ch 8DZV277329-, Pla
					CZ096	Sachs	Ø 22,20	Ch 8DZV277329-
	95-				**PZ076**	Sachs	Ø 19,05	Ch -8DV170678, Alu
	95-				**PZ106**	Sachs	Ø 19,05	Ch -8DV170678, Alu
	0				**PZ105**	Sachs	Ø 19,05	Ch 8DVZ170679-, Alu
	-00				**PZ085**	Sachs	Ø 19,05	Ch 8DVZ170679-, Pla
1.8 quattro Eng.APT/ ARG/ AVV (92kW)	2/99-4/01				**PF277**	Luc	Ø 25,40	Alu, +ABS, +ESP, LHD
	1/95-1/99				**PF223**	Luc	Ø 23,81	+ABS, -ESP, LHD
	2/99-4/01				**PF492**	Luc	Ø 25,40	+ABS, -ESP, LHD
	8/97-1/99				**PF383**	Luc	Ø 23,81	Alu, +ESP, LHD
	2/99-11/00				**PF278**	Luc	Ø 25,40	Alu, RHD
	1/95-				**CZ052**	Sachs	Ø 22,20	Ch -8DZV277328, Alu
	1/95-				**CZ097**	Sachs	Ø 22,20	Ch -8DZV277328
					CZ074	Sachs	Ø 22,20	Ch 8DZV277329-, Pla
					CZ096	Sachs	Ø 22,20	Ch 8DZV277329-
					PZ085	Sachs	Ø 19,05	Ch 8DVZ170679-, Pla
					PZ105	Sachs	Ø 19,05	Ch 8DVZ170679-, Alu
	95-				**PZ076**	Sachs	Ø 19,05	Ch -8DZV277328, Alu
	95-				**PZ106**	Sachs	Ø 19,05	Ch -8DZV277328, Alu
1.8 T. Eng.AEB/ ANB/ APU/ ARK (110kW)	2/99-4/01				**PF277**	Luc	Ø 25,40	Alu, +ABS, +ESP, LHD
	95-1/99				**PF223**	Luc	Ø 23,81	+ABS, -ESP, LHD
	2/99-4/01				**PF492**	Luc	Ø 25,40	+ABS, -ESP, LHD
	2/99-11/00				**PF278**	Luc	Ø 25,40	Alu, RHD

		Spare Parts	F/R	L/R	FRITECH ref.		DIMENSIONS mm.	NOTE
1.8 T. Eng.AEB/ ANB/ APU/ ARK (110kW)	1/95-				**CZ052**	Sachs	Ø 22,20	Ch -8DZV180000, Alu
	1/95-				**CZ097**	Sachs	Ø 22,20	Ch -8DZV180000
					CZ074	Sachs	Ø 22,20	Ch 8DZV180001-, Pla
					CZ096	Sachs	Ø 22,20	Ch 8DZV180001-
					PZ085	Sachs	Ø 19,05	Ch 8DVZ180001-, Pla
					PZ105	Sachs	Ø 19,05	Ch 8DVZ180001-, Alu
	95-				**PZ076**	Sachs	Ø 19,05	Ch -8DZV180000, Alu
	95-				**PZ106**	Sachs	Ø 19,05	Ch -8DZV180000, Alu
1.8 T. Eng.AWT (110kW)	2/99-4/01				**PF277**	Luc	Ø 25,40	Alu, +ABS, +ESP, LHD
	95-1/99				**PF223**	Luc	Ø 23,81	+ABS, -ESP, LHD
	2/99-4/01				**PF492**	Luc	Ø 25,40	+ABS, -ESP, LHD
	2/99-11/00				**PF278**	Luc	Ø 25,40	Alu, RHD
	1/95-				**CZ052**	Sachs	Ø 22,20	Ch -8DZV180000, Alu
	1/95-				**CZ097**	Sachs	Ø 22,20	Ch -8DZV180000
					CZ074	Sachs	Ø 22,20	Ch 8DZV180001-, Pla
					CZ096	Sachs	Ø 22,20	Ch 8DZV180001-
					PZ085	Sachs	Ø 19,05	Ch 8DVZ180001-, Pla
					PZ105	Sachs	Ø 19,05	Ch 8DVZ180001-, Alu
	95-				**PZ076**	Sachs	Ø 19,05	Ch -8DZV180000, Alu
	95-				**PZ106**	Sachs	Ø 19,05	Ch -8DZV180000, Alu
1.8 T. quattro Eng.AEB/ ANB/ APU/ ARK (110kW)	2/99-4/01				**PF277**	Luc	Ø 25,40	Alu, +ABS, +ESP, LHD
	95-1/99				**PF223**	Luc	Ø 23,81	+ABS, -ESP, LHD
	2/99-4/01				**PF492**	Luc	Ø 25,40	+ABS, -ESP, LHD
	8/97-1/99				**PF383**	Luc	Ø 23,81	Alu, +ESP, LHD
	2/99-11/00				**PF278**	Luc	Ø 25,40	Alu, RHD
	1/95-				**CZ052**	Sachs	Ø 22,20	Ch -8DZV277328, Alu
	1/95-				**CZ097**	Sachs	Ø 22,20	Ch -8DZV277328
					CZ074	Sachs	Ø 22,20	Ch 8DZV277329-, Pla
					CZ096	Sachs	Ø 22,20	Ch 8DZV277329-
					PZ085	Sachs	Ø 19,05	Ch 8DVZ170679-, Pla
					PZ105	Sachs	Ø 19,05	Ch 8DVZ170679-, Alu
	95-				**PZ076**	Sachs	Ø 19,05	Ch -8DZV277328, Alu
	95-				**PZ106**	Sachs	Ø 19,05	Ch -8DZV277328, Alu
1.8 T. quattro Eng.AWT (110kW)	2/99-4/01				**PF277**	Luc	Ø 25,40	Alu, +ABS, +ESP, LHD
	95-1/99				**PF223**	Luc	Ø 23,81	+ABS, -ESP, LHD
	2/99-4/01				**PF492**	Luc	Ø 25,40	+ABS, -ESP, LHD
	8/97-1/99				**PF383**	Luc	Ø 23,81	Alu, +ESP, LHD
	2/99-11/00				**PF278**	Luc	Ø 25,40	Alu, RHD
	1/95-				**CZ052**	Sachs	Ø 22,20	Ch -8DZV277328, Alu
	1/95-				**CZ097**	Sachs	Ø 22,20	Ch -8DZV277328
					CZ074	Sachs	Ø 22,20	Ch 8DZV277329-, Pla
					CZ096	Sachs	Ø 22,20	Ch 8DZV277329-
					PZ085	Sachs	Ø 19,05	Ch 8DVZ170679-, Pla
					PZ105	Sachs	Ø 19,05	Ch 8DVZ170679-, Alu
	95-				**PZ076**	Sachs	Ø 19,05	Ch -8DZV277328, Alu
	95-				**PZ106**	Sachs	Ø 19,05	Ch -8DZV277328, Alu
1.8 T., quattro Eng.AJL (132kW)	2/99-4/01				**PF277**	Luc	Ø 25,40	Alu, +ABS, +ESP, LHD
	97-1/99				**PF223**	Luc	Ø 23,81	+ABS, -ESP, LHD
	2/99-4/01				**PF492**	Luc	Ø 25,40	+ABS, -ESP, LHD
	8/97-1/99				**PF383**	Luc	Ø 23,81	Alu, Mod.Quattro, +ESP, LHD
	2/99-11/00				**PF278**	Luc	Ø 25,40	Alu, RHD
	97-11/00				**CZ074**	Sachs	Ø 22,20	Ch 8DZV277329-, Pla
	97-11/00				**CZ096**	Sachs	Ø 22,20	Ch 8DZV277329-
	12/97-11/00				**PZ085**	Sachs	Ø 19,05	Ch 8DVZ170679-, Pla
	12/97-11/00				**PZ105**	Sachs	Ø 19,05	Ch 8DVZ170679-, Alu
1.8, quattro Eng.ADR (92kW)	95-1/99				**PF383**	Luc	Ø 23,81	Alu, Only Quattro, +ABS, +ESP
	2/99-4/01				**PF277**	Luc	Ø 25,40	Alu, +ABS, +ESP, LHD
	1/95-1/99				**PF223**	Luc	Ø 23,81	+ABS, -ESP, LHD
	2/99-4/01				**PF492**	Luc	Ø 25,40	+ABS, -ESP, LHD
	2/99-11/00				**PF278**	Luc	Ø 25,40	Alu, RHD
	1/95-				**CZ052**	Sachs	Ø 22,20	Ch -8DZV277328, Alu
	1/95-				**CZ097**	Sachs	Ø 22,20	Ch -8DZV277328
					CZ074	Sachs	Ø 22,20	Ch 8DZV277329-, Pla
					CZ096	Sachs	Ø 22,20	Ch 8DZV277329-

AUDI

		Spare Parts	F/R	L/R	FRITECH ref.		DIMENSIONS mm.	NOTE
1.8, quattro Eng.ADR (92kW)					**PZ085**	Sachs	Ø 19,05	Ch 8DVZ170679-, Pla
					PZ105	Sachs	Ø 19,05	Ch 8DVZ170679-, Alu
	95-				**PZ076**	Sachs	Ø 19,05	Ch -8DZV277328, Alu
	95-				**PZ106**	Sachs	Ø 19,05	Ch -8DZV277328, Alu
1.9 D (47kW)	2/99-11/00				**PF278**	Luc	Ø 25,40	Alu, RHD
1.9 DUO Avant Eng.AHU (66kW)	98-12/98				**CZ052**	Sachs	Ø 22,20	Ch -8DZV180000, Alu
	98-12/98				**CZ097**	Sachs	Ø 22,20	Ch -8DZV180000
1.9 TDi Eng.1Z (66kW)	2/99-4/01				**PF277**	Luc	Ø 25,40	Alu, +ABS, +ESP, LHD
	1/95-1/99				**PF223**	Luc	Ø 23,81	+ABS, -ESP, LHD
	2/99-4/01				**PF492**	Luc	Ø 25,40	+ABS, -ESP
	2/99-11/00				**PF278**	Luc	Ø 25,40	Alu, RHD
	95-12/98				**CZ052**	Sachs	Ø 22,20	Ch -8DZV180000, Alu
	95-12/98				**CZ097**	Sachs	Ø 22,20	Ch -8DZV180000
	1/99-				**CZ074**	Sachs	Ø 22,20	Ch 8DZV180001-, Pla
	1/99-				**CZ096**	Sachs	Ø 22,20	Ch 8DZV180001-
					PZ085	Sachs	Ø 19,05	Ch 8DVZ180001-, Pla
					PZ105	Sachs	Ø 19,05	Ch 8DVZ180001-, Alu
	95-				**PZ076**	Sachs	Ø 19,05	Ch -8DZV180000, Alu
	95-				**PZ106**	Sachs	Ø 19,05	Ch -8DZV180000, Alu
1.9 TDi Eng.AFF (55kW)	2/99-4/01				**PF277**	Luc	Ø 25,40	Alu, +ABS, +ESP, LHD
	3/96-1/99				**PF223**	Luc	Ø 23,81	+ABS, -ESP, LHD
	2/99-4/01				**PF492**	Luc	Ø 25,40	+ABS, -ESP, LHD
	2/99-11/00				**PF278**	Luc	Ø 25,40	Alu, RHD
	95-12/98				**CZ052**	Sachs	Ø 22,20	Ch -8DZV180000, Alu
	95-12/98				**CZ097**	Sachs	Ø 22,20	Ch -8DZV180000
	1/99-				**CZ074**	Sachs	Ø 22,20	Ch 8DZV180001-, Pla
	1/99-				**CZ096**	Sachs	Ø 22,20	Ch 8DZV180001-
					PZ085	Sachs	Ø 19,05	Ch 8DVZ180001-, Pla
					PZ105	Sachs	Ø 19,05	Ch 8DVZ180001-, Alu
	95-				**PZ076**	Sachs	Ø 19,05	Ch -8DZV180000, Alu
	95-				**PZ106**	Sachs	Ø 19,05	Ch -8DZV180000, Alu
1.9 TDi Eng.AFN/ AVG (81kW)	2/99-4/01				**PF277**	Luc	Ø 25,40	Alu, +ABS, +ESP, LHD
	2/96-1/99				**PF223**	Luc	Ø 23,81	+ABS, -ESP, LHD
	2/99-4/01				**PF492**	Luc	Ø 25,40	+ABS, -ESP, LHD
	2/99-11/00				**PF278**	Luc	Ø 25,40	Alu, RHD
	95-12/98				**CZ052**	Sachs	Ø 22,20	Ch -8DZV180000, Alu
	95-12/98				**CZ097**	Sachs	Ø 22,20	Ch -8DZV180000
	1/99-				**CZ074**	Sachs	Ø 22,20	Ch 8DZV180001-, Pla
	1/99-				**CZ096**	Sachs	Ø 22,20	Ch 8DZV180001-
					PZ085	Sachs	Ø 19,05	Ch 8DVZ180001-, Pla
					PZ105	Sachs	Ø 19,05	Ch 8DVZ180001-, Alu
	95-				**PZ076**	Sachs	Ø 19,05	Ch -8DZV180000, Alu
	95-				**PZ106**	Sachs	Ø 19,05	Ch -8DZV180000, Alu
1.9 TDi Eng.AHH/ AHU (66kW)	2/99-4/01				**PF277**	Luc	Ø 25,40	Alu, +ABS, +ESP, LHD
	1/95-1/99				**PF223**	Luc	Ø 23,81	+ABS, -ESP, LHD
	2/99-4/01				**PF492**	Luc	Ø 25,40	+ABS, -ESP
	2/99-11/00				**PF278**	Luc	Ø 25,40	Alu, RHD
	95-12/98				**CZ052**	Sachs	Ø 22,20	Ch -8DZV180000, Alu
	95-12/98				**CZ097**	Sachs	Ø 22,20	Ch -8DZV180000
	1/99-				**CZ074**	Sachs	Ø 22,20	Ch 8DZV180001-, Pla
	1/99-				**CZ096**	Sachs	Ø 22,20	Ch 8DZV180001-
					PZ085	Sachs	Ø 19,05	Ch 8DVZ180001-, Pla
					PZ105	Sachs	Ø 19,05	Ch 8DVZ180001-, Alu
	95-				**PZ076**	Sachs	Ø 19,05	Ch -8DZV180000, Alu
	95-				**PZ106**	Sachs	Ø 19,05	Ch -8DZV180000, Alu
1.9 TDi Eng.AJM/ ATJ (85kW)	00-4/01				**PF277**	Luc	Ø 25,40	Alu, +ABS, +ESP, LHD
	00-4/01				**PF492**	Luc	Ø 25,40	+ABS, -ESP, LHD
	00-01				**PF278**	Luc	Ø 25,40	Alu, RHD
	3/00-9/01				**CZ074**	Sachs	Ø 22,20	Ch 8DZV180001-, Pla
	3/00-9/01				**CZ096**	Sachs	Ø 22,20	Ch 8DZV180001-
	3/00-9/01				**PZ085**	Sachs	Ø 19,05	Ch 8DVZ180001-, Pla
	3/00-9/01				**PZ105**	Sachs	Ø 19,05	Ch 8DVZ180001-, Alu
1.9 TDi quattro Eng.AFN/ AVG (81kW)	2/99-4/01				**PF277**	Luc	Ø 25,40	Alu, +ABS, +ESP, LHD
	2/96-1/99				**PF223**	Luc	Ø 23,81	+ABS, -ESP, LHD

		Spare Parts	F/R	L/R	FRITECH ref.		DIMENSIONS mm.	NOTE
1.9 TDi quattro Eng.AFN/ AVG (81kW)	2/99-4/01				**PF492**	Luc	Ø 25,40	+ABS, -ESP, LHD
	8/97-1/99				**PF383**	Luc	Ø 23,81	Alu, +ESP, LHD
	2/99-11/00				**PF278**	Luc	Ø 25,40	Alu, RHD
	96-				**CZ052**	Sachs	Ø 22,20	Ch -8DZV277328, Alu
	96-				**CZ097**	Sachs	Ø 22,20	Ch -8DZV277328
					CZ074	Sachs	Ø 22,20	Ch 8DZV277329-, Pla
					CZ096	Sachs	Ø 22,20	Ch 8DZV277329-
					PZ085	Sachs	Ø 19,05	Ch 8DVZ170679-, Pla
					PZ105	Sachs	Ø 19,05	Ch 8DVZ170679-, Alu
	95-				**PZ076**	Sachs	Ø 19,05	Ch -8DZV277328, Alu
	95-				**PZ106**	Sachs	Ø 19,05	Ch -8DZV277328, Alu
1.9 TDi quattro Eng.AJM/ ATJ (85kW)	00-4/01				**PF277**	Luc	Ø 25,40	Alu, +ABS, +ESP, LHD
	00-4/01				**PF492**	Luc	Ø 25,40	+ABS, -ESP, LHD
	00-01				**PF383**	Luc	Ø 23,81	Alu, +ESP, LHD
	00-01				**PF278**	Luc	Ø 25,40	Alu, RHD
	3/00-9/01				**CZ074**	Sachs	Ø 22,20	Ch 8DZV277329-, Pla
	3/00-9/01				**CZ096**	Sachs	Ø 22,20	Ch 8DZV277329-
	3/00-9/01				**PZ085**	Sachs	Ø 19,05	Ch 8DVZ170679-, Pla
	3/00-9/01				**PZ105**	Sachs	Ø 19,05	Ch 8DVZ170679-, Alu
2.4 Eng.AFM (110kW)	95-97				**PF223**	Luc	Ø 23,81	+ABS, -ESP
2.4 Eng.AGA/ ALF/ AML/ APS/ ARJ (121kW)	2/99-4/01				**PF277**	Luc	Ø 25,40	Alu, +ABS, +ESP, LHD
	8/97-1/99				**PF223**	Luc	Ø 23,81	+ABS, -ESP, LHD
	2/99-4/01				**PF492**	Luc	Ø 25,40	+ABS, -ESP, LHD
	2/99-11/00				**PF278**	Luc	Ø 25,40	Alu, RHD
	3/97-11/00				**CZ074**	Sachs	Ø 22,20	Ch 8DZV180001-, Pla
	3/97-11/00				**CZ096**	Sachs	Ø 22,20	Ch 8DZV180001-
	3/97-11/00				**PZ085**	Sachs	Ø 19,05	Ch 8DVZ180001-, Pla
	3/97-11/00				**PZ105**	Sachs	Ø 19,05	Ch 8DVZ180001-, Alu
2.4 Eng.AJG/ AMM/ APZ (120kW)	2/99-4/01				**PF277**	Luc	Ø 25,40	Alu, +ABS, +ESP, LHD
	8/97-1/99				**PF223**	Luc	Ø 23,81	+ABS, -ESP, LHD
	2/99-4/01				**PF492**	Luc	Ø 25,40	+ABS, -ESP, LHD
	2/99-11/00				**PF278**	Luc	Ø 25,40	Alu, RHD
	3/97-11/00				**CZ074**	Sachs	Ø 22,20	Ch 8DZV180001-, Pla
	3/97-11/00				**CZ096**	Sachs	Ø 22,20	Ch 8DZV180001-
	3/97-11/00				**PZ085**	Sachs	Ø 19,05	Ch 8DVZ180001-, Pla
	3/97-11/00				**PZ105**	Sachs	Ø 19,05	Ch 8DVZ180001-, Alu
2.4 quattro Eng.AGA/ ALF/ AML/ APS/ ARJ (121kW)	2/99-4/01				**PF277**	Luc	Ø 25,40	Alu, +ABS, +ESP, LHD
	8/97-1/99				**PF223**	Luc	Ø 23,81	+ABS, -ESP, LHD
	2/99-4/01				**PF492**	Luc	Ø 25,40	+ABS, -ESP, LHD
	8/97-1/99				**PF383**	Luc	Ø 23,81	Alu, +ESP, LHD
	2/99-11/00				**PF278**	Luc	Ø 25,40	Alu, RHD
	3/97-11/00				**CZ074**	Sachs	Ø 22,20	Ch 8DZV277329-, Pla
	3/97-11/00				**CZ096**	Sachs	Ø 22,20	Ch 8DZV277329-
	3/97-11/00				**PZ085**	Sachs	Ø 19,05	Ch 8DVZ170679-, Pla
	3/97-11/00				**PZ105**	Sachs	Ø 19,05	Ch 8DVZ170679-, Alu
2.4 quattro Eng.AJG/ AMM/ APZ (120kW)	2/99-4/01				**PF277**	Luc	Ø 25,40	Alu, +ABS, +ESP, LHD
	8/97-1/99				**PF223**	Luc	Ø 23,81	+ABS, -ESP, LHD
	2/99-4/01				**PF492**	Luc	Ø 25,40	+ABS, -ESP, LHD
	8/97-1/99				**PF383**	Luc	Ø 23,81	Alu, +ESP, LHD
	2/99-11/00				**PF278**	Luc	Ø 25,40	Alu, RHD
	3/97-11/00				**CZ074**	Sachs	Ø 22,20	Ch 8DZV277329-, Pla
	3/97-11/00				**CZ096**	Sachs	Ø 22,20	Ch 8DZV277329-
	3/97-11/00				**PZ085**	Sachs	Ø 19,05	Ch 8DVZ170679-, Pla
	3/97-11/00				**PZ105**	Sachs	Ø 19,05	Ch 8DVZ170679-, Alu
2.5 TDi Eng.AFB (110kW)	2/99-4/01				**PF277**	Luc	Ø 25,40	Alu, +ABS, +ESP, LHD
	8/97-1/99				**PF223**	Luc	Ø 23,81	+ABS, -ESP, LHD
	2/99-4/01				**PF492**	Luc	Ø 25,40	+ABS, -ESP, LHD
	2/99-11/00				**PF278**	Luc	Ø 25,40	Alu, RHD
	9/97-11/00				**CZ074**	Sachs	Ø 22,20	Ch 8DZV180001-, Pla
	9/97-11/00				**CZ096**	Sachs	Ø 22,20	Ch 8DZV180001-
	9/97-11/00				**PZ085**	Sachs	Ø 19,05	Ch 8DVZ180001-, Pla
	9/97-11/00				**PZ105**	Sachs	Ø 19,05	Ch 8DVZ180001-, Alu
2.5 TDi Eng.AKN (110kW)	2/99-4/01				**PF277**	Luc	Ø 25,40	Alu, +ABS, +ESP, LHD
	8/97-1/99				**PF223**	Luc	Ø 23,81	+ABS, -ESP, LHD

AUDI

		Spare Parts	F/R	L/R	FRITECH ref.		DIMENSIONS mm.	NOTE
2.5 TDi Eng.AKN (110kW)	2/99-4/01				**PF492**	Luc	Ø 25,40	+ABS, -ESP, LHD
	2/99-11/00				**PF278**	Luc	Ø 25,40	Alu, RHD
	9/97-11/00				**CZ074**	Sachs	Ø 22,20	Ch 8DZV180001-, Pla
	9/97-11/00				**CZ096**	Sachs	Ø 22,20	Ch 8DZV180001-
	9/97-11/00				**PZ085**	Sachs	Ø 19,05	Ch 8DVZ180001-, Pla
	9/97-11/00				**PZ105**	Sachs	Ø 19,05	Ch 8DVZ180001-, Alu
2.5 TDi quattro Eng.AFB (110kW)	2/99-4/01				**PF277**	Luc	Ø 25,40	Alu, +ABS, +ESP, LHD
	8/97-1/99				**PF223**	Luc	Ø 23,81	+ABS, -ESP, LHD
	2/99-4/01				**PF492**	Luc	Ø 25,40	+ABS, -ESP, LHD
	8/97-1/99				**PF383**	Luc	Ø 23,81	Alu, +ESP, LHD
	2/99-11/00				**PF278**	Luc	Ø 25,40	Alu, RHD
	9/97-11/00				**CZ074**	Sachs	Ø 22,20	Ch 8DZV277329-, Pla
	9/97-11/00				**CZ096**	Sachs	Ø 22,20	Ch 8DZV277329-
	9/97-11/00				**PZ085**	Sachs	Ø 19,05	Ch 8DVZ170679-, Pla
	9/97-11/00				**PZ105**	Sachs	Ø 19,05	Ch 8DVZ170679-, Alu
2.5 TDi quattro Eng.AKN (110kW)	2/99-4/01				**PF277**	Luc	Ø 25,40	Alu, +ABS, +ESP, LHD
	8/97-1/99				**PF223**	Luc	Ø 23,81	+ABS, -ESP, LHD
	2/99-4/01				**PF492**	Luc	Ø 25,40	+ABS, -ESP, LHD
	8/97-1/99				**PF383**	Luc	Ø 23,81	Alu, +ESP, LHD
	2/99-11/00				**PF278**	Luc	Ø 25,40	Alu, RHD
	9/97-11/00				**CZ074**	Sachs	Ø 22,20	Ch 8DZV277329-, Pla
	9/97-11/00				**CZ096**	Sachs	Ø 22,20	Ch 8DZV277329-
	9/97-11/00				**PZ085**	Sachs	Ø 19,05	Ch 8DVZ170679-, Pla
	9/97-11/00				**PZ105**	Sachs	Ø 19,05	Ch 8DVZ170679-, Alu
2.6 Eng.ABC (110kW)	2/99-4/01				**PF277**	Luc	Ø 25,40	Alu, +ABS, +ESP, LHD
	1/95-1/99				**PF223**	Luc	Ø 23,81	+ABS, -ESP, LHD
	2/99-01				**PF492**	Luc	Ø 25,40	+ABS, -ESP
	2/99-11/00				**PF278**	Luc	Ø 25,40	Alu, RHD
	1/95-				**CZ052**	Sachs	Ø 22,20	Ch -8DZV180000, Alu
	1/95-				**CZ097**	Sachs	Ø 22,20	Ch -8DZV180000
					CZ074	Sachs	Ø 22,20	Ch 8DZV180001-, Pla
					CZ096	Sachs	Ø 22,20	Ch 8DZV180001-
					PZ085	Sachs	Ø 19,05	Ch 8DVZ180001-, Pla
					PZ105	Sachs	Ø 19,05	Ch 8DVZ180001-, Alu
	95-				**PZ076**	Sachs	Ø 19,05	Ch -8DZV180000, Alu
	95-				**PZ106**	Sachs	Ø 19,05	Ch -8DZV180000, Alu
2.6 quattro Eng.ABC (110kW)	2/99-4/01				**PF277**	Luc	Ø 25,40	Alu, +ABS, +ESP, LHD
	1/95-1/99				**PF223**	Luc	Ø 23,81	+ABS, -ESP, LHD
	8/97-1/99				**PF383**	Luc	Ø 23,81	Alu, +ESP, LHD
	2/99-11/00				**PF278**	Luc	Ø 25,40	Alu, RHD
	1/95-				**CZ052**	Sachs	Ø 22,20	Ch -8DZV180000, Alu
	1/95-				**CZ097**	Sachs	Ø 22,20	Ch -8DZV180000
					CZ074	Sachs	Ø 22,20	Ch 8DZV277329-, Pla
					CZ096	Sachs	Ø 22,20	Ch 8DZV277329-
					PZ085	Sachs	Ø 19,05	Ch 8DVZ170679-, Pla
					PZ105	Sachs	Ø 19,05	Ch 8DVZ170679-, Alu
	95-				**PZ076**	Sachs	Ø 19,05	Ch -8DZV277328, Alu
	95-				**PZ106**	Sachs	Ø 19,05	Ch -8DZV277328, Alu
2.7 RS4 quattro Avant Eng.ASJ/ AZR (280kW)	00-01				**PF277**	Luc	Ø 25,40	Alu, +ABS, +ESP, LHD
	6/00-11/00				**PF278**	Luc	Ø 25,40	Alu, RHD
	00-01				**CZ074**	Sachs	Ø 22,20	Ch 8DZV277329-, Pla
	00-01				**CZ096**	Sachs	Ø 22,20	Ch 8DZV277329-
	00-01				**PZ085**	Sachs	Ø 19,05	Ch 8DVZ170679-, Pla
	00-01				**PZ105**	Sachs	Ø 19,05	Ch 8DVZ170679-, Alu
2.7 S4 quattro Eng.AGB (195kW)	2/99-4/01				**PF277**	Luc	Ø 25,40	Alu, +ABS, +ESP, LHD
	9/97-1/99				**PF223**	Luc	Ø 23,81	+ABS, -ESP, LHD
	2/99-4/01				**PF492**	Luc	Ø 25,40	+ABS, -ESP, LHD
	8/97-1/99				**PF383**	Luc	Ø 23,81	Alu, +ESP, LHD
	2/99-11/00				**PF278**	Luc	Ø 25,40	Alu, RHD
	9/97-9/01				**CZ074**	Sachs	Ø 22,20	Ch 8DZV277329-, Pla
	9/97-9/01				**CZ096**	Sachs	Ø 22,20	Ch 8DZV277329-
	9/97-9/01				**PZ085**	Sachs	Ø 19,05	Ch 8DVZ170679-, Pla
	9/97-9/01				**PZ105**	Sachs	Ø 19,05	Ch 8DVZ170679-, Alu

		Spare Parts	F/R	L/R	FRITECH ref.		DIMENSIONS mm.	NOTE
2.8 Eng.AAH (128kW)	1/95-97				**PF223**	Luc	Ø 23,81	+ABS, -ESP, LHD
	1/95-				**CZ052**	Sachs	Ø 22,20	Ch -8DZV180000, Alu
	1/95-				**CZ097**	Sachs	Ø 22,20	Ch -8DZV180000
					CZ074	Sachs	Ø 22,20	Ch 8DZV180001-, Pla
					CZ096	Sachs	Ø 22,20	Ch 8DZV180001-
	95-97				**PZ076**	Sachs	Ø 19,05	Ch -8DZV180000, Alu
	95-97				**PZ106**	Sachs	Ø 19,05	Ch -8DZV180000, Alu
2.8 Eng.ACK/ ALG/ AMX/ APR/ AQD (142kW)	2/99-4/01				**PF277**	Luc	Ø 25,40	Alu, +ABS, +ESP, LHD
	10/96-1/99				**PF223**	Luc	Ø 23,81	+ABS, -ESP, LHD
	2/99-4/01				**PF492**	Luc	Ø 25,40	+ABS, -ESP, LHD
	2/99-11/00				**PF278**	Luc	Ø 25,40	Alu, RHD
	96-				**CZ052**	Sachs	Ø 22,20	Ch -8DZV180000, Alu
	96-				**CZ097**	Sachs	Ø 22,20	Ch -8DZV180000
					PZ085	Sachs	Ø 19,05	Ch 8DVZ180001-, Pla
					PZ105	Sachs	Ø 19,05	Ch 8DVZ180001-, Alu
	96-				**PZ076**	Sachs	Ø 19,05	Ch -8DZV180000, Alu
	96-				**PZ106**	Sachs	Ø 19,05	Ch -8DZV180000, Alu
2.8 quattro Eng.AAH (128kW)	95-97				**PF383**	Luc	Ø 23,81	Alu, +ABS, +ESP, LHD
	1/95-97				**PF223**	Luc	Ø 23,81	+ABS, -ESP, LHD
	1/95-				**CZ052**	Sachs	Ø 22,20	Ch -8DZV277328, Alu
	1/95-				**CZ097**	Sachs	Ø 22,20	Ch -8DZV277328
					CZ074	Sachs	Ø 22,20	Ch 8DZV277329-, Pla
					CZ096	Sachs	Ø 22,20	Ch 8DZV277329-
	95-97				**PZ076**	Sachs	Ø 19,05	Ch -8DZV277328, Alu
	95-97				**PZ106**	Sachs	Ø 19,05	Ch -8DZV277328, Alu
2.8 quattro Eng.ACK/ ALG/ AMX/ APR/ AQD	2/99-4/01				**PF277**	Luc	Ø 25,40	Alu, +ABS, +ESP, LHD
(142kW)	10/96-1/99				**PF223**	Luc	Ø 23,81	+ABS, -ESP, LHD
	2/99-4/01				**PF492**	Luc	Ø 25,40	+ABS, -ESP, LHD
	8/97-1/99				**PF383**	Luc	Ø 23,81	Alu, +ESP, LHD
	2/99-11/00				**PF278**	Luc	Ø 25,40	Alu, RHD
	1/95-				**CZ052**	Sachs	Ø 22,20	Ch -8DZV277328, Alu
	1/95-				**CZ097**	Sachs	Ø 22,20	Ch -8DZV277328
					CZ074	Sachs	Ø 22,20	Ch 8DZV277329-, Pla
					CZ096	Sachs	Ø 22,20	Ch 8DZV277329-
					PZ085	Sachs	Ø 19,05	Ch 8DVZ170679-, Pla
					PZ105	Sachs	Ø 19,05	Ch 8DVZ170679-, Alu
	96-				**PZ076**	Sachs	Ø 19,05	Ch -8DZV277328, Alu
	96-				**PZ106**	Sachs	Ø 19,05	Ch -8DZV277328, Alu
A4 II (8E2, B6), Avant 11/00-10/04								
1.6 Eng.ALZ (75kW)	00-04				**PF826**	Ate	Ø 25,40	Alu
	11/00-				**PF534**	Trw	Ø 25,40	Alu
	00-04				**CZ074**	Sachs	Ø 22,20	Pla
	00-04				**CZ096**	Sachs	Ø 22,20	
1.8 T., quattro Eng.AMB (125kW)	00-04				**PF826**	Ate	Ø 25,40	Alu
	01-04				**CZ074**	Sachs	Ø 22,20	Pla
	01-04				**CZ096**	Sachs	Ø 22,20	
1.8 T., quattro Eng.AVJ (110kW)	00-04				**PF826**	Ate	Ø 25,40	Alu
	00-02				**PF534**	Trw	Ø 25,40	Alu
	00-02				**CZ074**	Sachs	Ø 22,20	Pla
	00-02				**CZ096**	Sachs	Ø 22,20	
1.8 T., quattro Eng.BEX (140kW)	00-04				**PF826**	Ate	Ø 25,40	Alu
	02-04				**PF534**	Trw	Ø 25,40	Alu
	02-04				**CZ074**	Sachs	Ø 22,20	Pla
	02-04				**CZ096**	Sachs	Ø 22,20	
1.8 T., quattro Eng.BFB (120kW)	00-04				**PF826**	Ate	Ø 25,40	Alu
	02-				**PF534**	Trw	Ø 25,40	Alu
	02-04				**CZ074**	Sachs	Ø 22,20	Pla
	02-04				**CZ096**	Sachs	Ø 22,20	
1.9 TDi Eng.AVB (74kW)	01-04				**PF826**	Ate	Ø 25,40	Alu
	01-04				**PF534**	Trw	Ø 25,40	Alu
	01-04				**CZ074**	Sachs	Ø 22,20	Pla
	01-04				**CZ096**	Sachs	Ø 22,20	
1.9 TDi Eng.AVF/ AWX (96kW)	00-04				**PF826**	Ate	Ø 25,40	Alu
	00-04				**PF534**	Trw	Ø 25,40	Alu

AUDI

		Spare Parts	F/R	L/R	FRITECH ref.		DIMENSIONS mm.	NOTE
1.9 TDi Eng.AVF/ AWX (96kW)	00-04				**CZ074**	Sachs	Ø 22,20	Pla
	00-04				**CZ096**	Sachs	Ø 22,20	
1.9 TDi Eng.BKE (85kW)	00-04				**PF826**	Ate	Ø 25,40	Alu
	6/04-10/04				**PF534**	Trw	Ø 25,40	Alu
	6/04-10/04				**CZ083**	Sachs	Ø 22,20	
1.9 TDi quattro Eng.AVF/ AWX (96kW)	00-04				**PF826**	Ate	Ø 25,40	Alu
	11/00-				**PF534**	Trw	Ø 25,40	Alu
	00-04				**CZ074**	Sachs	Ø 22,20	Pla
	00-04				**CZ096**	Sachs	Ø 22,20	
2.0 Eng.ALT (96kW)	00-04				**PF826**	Ate	Ø 25,40	Alu
	00-04				**PF534**	Trw	Ø 25,40	Alu
	00-04				**CZ074**	Sachs	Ø 22,20	Pla
	00-04				**CZ096**	Sachs	Ø 22,20	
2.0 FSI Eng.AWA (110kW)	02-04				**PF826**	Ate	Ø 25,40	Alu
	02-				**PF534**	Trw	Ø 25,40	Alu
	02-04				**CZ074**	Sachs	Ø 22,20	Pla
	02-04				**CZ096**	Sachs	Ø 22,20	
2.4 Eng.AMM (120kW)	01-04				**PF826**	Ate	Ø 25,40	Alu
	01-04				**CZ074**	Sachs	Ø 22,20	Pla
	01-04				**CZ096**	Sachs	Ø 22,20	
2.4 Eng.BDV (125kW)	00-04				**PF826**	Ate	Ø 25,40	Alu
	9/01-				**PF534**	Trw	Ø 25,40	Alu
	01-04				**CZ074**	Sachs	Ø 22,20	Pla
	01-04				**CZ096**	Sachs	Ø 22,20	
2.5 TDi Eng.AYM (114kW)	01-02				**PF826**	Ate	Ø 25,40	Alu
	8/01-				**PF534**	Trw	Ø 25,40	Alu
	01-02				**CZ074**	Sachs	Ø 22,20	Pla
	01-02				**CZ096**	Sachs	Ø 22,20	
2.5 TDi Eng.BCZ/ BDG/ BFC (120kW)	00-04				**PF826**	Ate	Ø 25,40	Alu
	7/02-				**PF534**	Trw	Ø 25,40	Alu
	02-04				**CZ074**	Sachs	Ø 22,20	Ch -8E4270000, Pla
	02-04				**CZ096**	Sachs	Ø 22,20	Ch -8E4270000
	7/02-10/04				**CZ083**	Sachs	Ø 22,20	
2.5, TDi quattro Eng.AKE/ BAU/ BDH (132kW)	01-04				**PF826**	Ate	Ø 25,40	Alu
	01-04				**PF534**	Trw	Ø 25,40	Alu
	01-04				**CZ074**	Sachs	Ø 22,20	Pla
	01-04				**CZ096**	Sachs	Ø 22,20	
3.0, quattro Eng.ASN/ AVK (162kW)	00-04				**PF826**	Ate	Ø 25,40	Alu
	11/00-				**PF534**	Trw	Ø 25,40	Alu
	00-04				**CZ074**	Sachs	Ø 22,20	Pla
	00-04				**CZ096**	Sachs	Ø 22,20	
3.0, quattro Eng.BBJ (160kW)	00-04				**PF826**	Ate	Ø 25,40	Alu
	4/01-				**PF534**	Trw	Ø 25,40	Alu
	01-04				**CZ074**	Sachs	Ø 22,20	Pla
	01-04				**CZ096**	Sachs	Ø 22,20	
4.1 S4 quattro Eng.BBK (253kW)	03-04				**PF879**	Trw	Ø 26,99	Alu
	03-04				**CZ074**	Sachs	Ø 22,20	Pla
	03-04				**CZ096**	Sachs	Ø 22,20	
A4 II Cabrio (8H7) 4/02-3/09								
1.8 Eng.AMB (125kW)	02-05				**PF826**	Ate	Ø 25,40	Alu
	02-05				**CZ074**	Sachs	Ø 22,20	Pla
	02-05				**CZ096**	Sachs	Ø 22,20	
1.8 T., quattro Eng.BFB (120kW)	00-04				**PF826**	Ate	Ø 25,40	Alu
	7/02-				**PF534**	Trw	Ø 25,40	Alu
	02-				**CZ074**	Sachs	Ø 22,20	Ch -8H4022000, Pla
	02-				**CZ096**	Sachs	Ø 22,20	Ch -8H4022000
	7/02-				**CZ083**	Sachs	Ø 22,20	Ch 8H4022001-
2.0 Eng.ALT (96kW)	04-				**PF826**	Ate	Ø 25,40	Alu
	02-				**CZ074**	Sachs	Ø 22,20	Ch -8H4022000, Pla
	02-				**CZ096**	Sachs	Ø 22,20	Ch -8H4022000
	9/04-				**CZ083**	Sachs	Ø 22,20	Ch 8H4022001-
2.0 TDi Eng.BPW (103kW)	00-04				**PF826**	Ate	Ø 25,40	Alu
	04-				**PF534**	Trw	Ø 25,40	Alu
	02-				**CZ074**	Sachs	Ø 22,20	Ch -8H4022000, Pla

		Spare Parts	F/R	L/R	FRITECH ref.		DIMENSIONS mm.	NOTE
2.0 TDi Eng.BPW (103kW)	02-				**CZ096**	Sachs	Ø 22,20	Ch -8H4022000
	10/05-				**CZ083**	Sachs	Ø 22,20	Ch 8H4022001-
2.0 TDi Eng.BRC (100kW)	00-04				**PF826**	Ate	Ø 25,40	Alu
2.0 TFSI, quattro Eng.BWE/BWT (147kW)	00-04				**PF826**	Ate	Ø 25,40	Alu
	06-				**PF534**	Trw	Ø 25,40	Alu
	06-				**CZ074**	Sachs	Ø 22,20	Ch -8H4022000, Pla
	06-				**CZ096**	Sachs	Ø 22,20	Ch -8H4022000
	1/06-				**CZ083**	Sachs	Ø 22,20	Ch 8H4022001-
2.4 Eng.AMM (120kW)	00-04				**PF826**	Ate	Ø 25,40	Alu
	02-				**CZ074**	Sachs	Ø 22,20	Ch -8H4022000, Pla
	02-				**CZ096**	Sachs	Ø 22,20	Ch -8H4022000
	4/02-				**CZ083**	Sachs	Ø 22,20	Ch 8H4022001-
2.4 Eng.BDV (125kW)	02-				**PF826**	Ate	Ø 25,40	Alu
	4/02-				**PF534**	Trw	Ø 25,40	Alu
	02-				**CZ074**	Sachs	Ø 22,20	Ch -8H4022000, Pla
	02-				**CZ096**	Sachs	Ø 22,20	Ch -8H4022000
	4/02-				**CZ083**	Sachs	Ø 22,20	Ch 8H4022001-
2.5 TDi Eng.BCZ/ BDG/ BFC (120kW)	02-				**PF826**	Ate	Ø 25,40	Alu
	8/02-				**PF534**	Trw	Ø 25,40	Alu
	02-				**CZ074**	Sachs	Ø 22,20	Ch -8H4022000, Pla
	02-				**CZ096**	Sachs	Ø 22,20	Ch -8H4022000
	8/02-				**CZ083**	Sachs	Ø 22,20	Ch 8H4022001-
2.7 TDi Eng.BPP (132kW)	06-				**PF826**	Ate	Ø 25,40	Alu
	06-				**PF534**	Trw	Ø 25,40	Alu
	06-				**CZ074**	Sachs	Ø 22,20	Ch -8H4022000, Pla
	06-				**CZ096**	Sachs	Ø 22,20	Ch -8H4022000
	06-				**CZ083**	Sachs	Ø 22,20	Ch 8H4022001-
3.0 Eng.BBJ (160kW)	02-05				**PF826**	Ate	Ø 25,40	Alu
	02-05				**PF534**	Trw	Ø 25,40	Alu
	02-				**CZ074**	Sachs	Ø 22,20	Ch -8H4022000, Pla
	02-				**CZ096**	Sachs	Ø 22,20	Ch -8H4022000
	-05				**CZ083**	Sachs	Ø 22,20	Ch 8H4022001-
3.0 TDi quattro Eng.ASB (171kW)	00-04				**PF826**	Ate	Ø 25,40	Alu
	05-				**PF534**	Trw	Ø 25,40	Alu
	02-				**CZ074**	Sachs	Ø 22,20	Ch -8H4022000, Pla
	02-				**CZ096**	Sachs	Ø 22,20	Ch -8H4022000
	10/05-				**CZ083**	Sachs	Ø 22,20	Ch 8H4022001-
3.0 TDi quattro Eng.BKN (150kW)	06-				**PF826**	Ate	Ø 25,40	Alu
	06-				**CZ074**	Sachs	Ø 22,20	Ch -8H4022000, Pla
	06-				**CZ096**	Sachs	Ø 22,20	Ch -8H4022000
	06-				**CZ083**	Sachs	Ø 22,20	Ch 8H4022001-
3.0, quattro Eng.ASN (162kW)	02-				**PF826**	Ate	Ø 25,40	Alu
	4/02-				**PF534**	Trw	Ø 25,40	Alu
	02-				**CZ074**	Sachs	Ø 22,20	Ch -8H4022000, Pla
	02-				**CZ096**	Sachs	Ø 22,20	Ch -8H4022000
	4/02-				**CZ083**	Sachs	Ø 22,20	Ch 8H4022001-
3.2 FSI, quattro Eng.AUK (188kW)	05-				**PF826**	Ate	Ø 25,40	Alu
	05-				**PF534**	Trw	Ø 25,40	Alu
	02-				**CZ074**	Sachs	Ø 22,20	Ch -8H4022000, Pla
	02-				**CZ096**	Sachs	Ø 22,20	Ch -8H4022000
	10/05-				**CZ083**	Sachs	Ø 22,20	Ch 8H4022001-
4.1 S4 quattro Eng.BBK (253kW)	04-05				**PF879**	Trw	Ø 26,99	Alu
	02-				**CZ074**	Sachs	Ø 22,20	Ch -8H4022000, Pla
	02-				**CZ096**	Sachs	Ø 22,20	Ch -8H4022000
	3/04-				**CZ083**	Sachs	Ø 22,20	Ch 8H4022001-
RS4 quattro Eng.BNS (309kW)	02-				**CZ074**	Sachs	Ø 22,20	Ch -8H4022000, Pla
	02-				**CZ096**	Sachs	Ø 22,20	Ch -8H4022000
	6/06-				**CZ083**	Sachs	Ø 22,20	Ch 8H4022001-
A4 III (8EC), Avant 11/04-10/07								
1.6 Eng.ALZ (75kW)	04-				**PF826**	Ate	Ø 25,40	Alu
	04-				**PF534**	Trw	Ø 25,40	Alu
	11/04-				**CZ083**	Sachs	Ø 22,20	
1.8 T, quattro Eng.BFB (120kW)	04-				**PF826**	Ate	Ø 25,40	Alu
	04-				**PF534**	Trw	Ø 25,40	Alu

AUDI

		Spare Parts	F/R	L/R	FRITECH ref.		DIMENSIONS mm.	NOTE
1.8 T, quattro Eng.BFB (120kW)	04-				**CZ083**	Sachs	Ø 22,20	
1.9 TDi Eng.BKE/ BRB (85kW)	00-04				**PF826**	Ate	Ø 25,40	Alu
	04-				**PF534**	Trw	Ø 25,40	Alu
	11/04-				**CZ083**	Sachs	Ø 22,20	
2.0 Eng.ALT (96kW)	04-				**PF826**	Ate	Ø 25,40	Alu
	04-				**PF534**	Trw	Ø 25,40	Alu
	11/04-				**CZ083**	Sachs	Ø 22,20	
2.0 FSi Eng.AWA (110kW)	00-04				**PF826**	Ate	Ø 25,40	Alu
2.0 FSi Eng.BPJ/ BYK (125kW)	06-07				**PF826**	Ate	Ø 25,40	Alu
	06-07				**CZ083**	Sachs	Ø 22,20	
2.0 TDi Eng.BNA/ BRF (100kW)	04-				**PF826**	Ate	Ø 25,40	Alu
	04-07				**PF534**	Trw	Ø 25,40	Alu
	04-07				**CZ083**	Sachs	Ø 22,20	
2.0 TDi Eng.BVF (93kW)	05-07				**PF826**	Ate	Ø 25,40	Alu
	05-07				**PF534**	Trw	Ø 25,40	Alu
2.0 TDi Eng.BVG (89kW)	05-06				**PF826**	Ate	Ø 25,40	Alu
	05-06				**PF534**	Trw	Ø 25,40	Alu
2.0 TDi, quattro Eng.BLB/ BRE/ BPW (103kW)	04-				**PF826**	Ate	Ø 25,40	Alu
	04-				**PF534**	Trw	Ø 25,40	Alu
	11/04-				**CZ083**	Sachs	Ø 22,20	
2.0 TDi, quattro Eng.BMN/ BRD (125kW)	06-07				**PF826**	Ate	Ø 25,40	Alu
	06-07				**PF534**	Trw	Ø 25,40	Alu
	06-07				**CZ083**	Sachs	Ø 22,20	
2.0 TDi, quattro Eng.BVA (120kW)	06-07				**PF534**	Trw	Ø 25,40	Alu
2.0 TFSI, quattro Eng.BGB/ BWE (147kW)	00-04				**PF826**	Ate	Ø 25,40	Alu
	04-				**PF534**	Trw	Ø 25,40	Alu
	11/04-				**CZ083**	Sachs	Ø 22,20	
2.0 TFSI, quattro Eng.BUL (162kW)	05-07				**PF826**	Ate	Ø 25,40	Alu
	05-07				**PF534**	Trw	Ø 25,40	Alu
	05-07				**CZ083**	Sachs	Ø 22,20	
2.5 TDi Eng.BCZ/ BDG (120kW)	04-				**PF826**	Ate	Ø 25,40	Alu
	04-				**PF534**	Trw	Ø 25,40	Alu
	11/04-				**CZ083**	Sachs	Ø 22,20	
2.7 TDi Eng.BPP (132kW)	06-				**PF826**	Ate	Ø 25,40	Alu
	06-				**PF534**	Trw	Ø 25,40	Alu
	1/06-				**CZ083**	Sachs	Ø 22,20	
2.7 TDi Avant Eng.BSG (120kW)	05-07				**PF826**	Ate	Ø 25,40	Alu
	05-07				**PF534**	Trw	Ø 25,40	Alu
3.0 TDi quattro Eng.ASB (171kW)	06-				**PF826**	Ate	Ø 25,40	Alu
	06-				**PF534**	Trw	Ø 25,40	Alu
	1/06-				**CZ083**	Sachs	Ø 22,20	
3.0 TDi quattro Eng.BKN (150kW)	00-04				**PF826**	Ate	Ø 25,40	Alu
	04-				**PF534**	Trw	Ø 25,40	Alu
	11/04-				**CZ083**	Sachs	Ø 22,20	
3.0, quattro (Exc. Avant) Eng.BBJ (160kW)	00-04				**PF826**	Ate	Ø 25,40	Alu
3.2 FSI, quattro Eng.AUK (188kW)	00-04				**PF826**	Ate	Ø 25,40	Alu
	05-				**PF534**	Trw	Ø 25,40	Alu
	1/05-				**CZ083**	Sachs	Ø 22,20	
RS4 quattro Eng.BNS (309kW)	05-				**PF879**	Trw	Ø 26,99	Alu
	9/05-				**CZ083**	Sachs	Ø 22,20	
S4 quattro Eng.BBK/ BHF (253kW)	11/04-				**CZ083**	Sachs	Ø 22,20	
A4 IV (8K2, K5), Avant 11/07-9/15								
1.8 16v TFSI Eng.CABA/ CDHA (88kW)	08-				**CZ123**	Sachs	Ø 19,05	Alu
1.8 16v TFSI, quattro Eng.CABB/ CDHB/ CCUA (118kW)	07-				**CZ123**	Sachs	Ø 19,05	Alu
1.8 TFSi, quattro Eng.CJEB (125kW)	12-				**CZ123**	Sachs	Ø 19,05	Alu
2.0 TDi Eng.CAGB/ CJCB (100kW)	07-				**CZ123**	Sachs	Ø 19,05	Alu
2.0 TDi Eng.CAGC/ CJCC (88kW)	08-				**CZ123**	Sachs	Ø 19,05	Alu
2.0 TDi Eng.CAHB/ CGLD (120kW)	08-				**CZ123**	Sachs	Ø 19,05	Alu
2.0 TDi, quattro Eng.CAGA/ CJCA/ CMEA/ CMFA (105kW)	07-				**CZ123**	Sachs	Ø 19,05	Alu
2.0 TDi, quattro Eng.CAHA (125kW)	08-				**CZ123**	Sachs	Ø 19,05	Alu
2.0 TDi, quattro Eng.CGLC/ CMGB (130kW)	12-				**CZ123**	Sachs	Ø 19,05	Alu

		Spare Parts	F/R	L/R	FRITECH ref.		DIMENSIONS mm.	NOTE
2.0 TFSI Eng.CAEA/ CDNB/ CDZA (132kW)	08-				**CZ123**	Sachs	Ø 19,05	Alu
2.0 TFSi flex, quattro Eng.CFKA (132kW)	09-				**CZ123**	Sachs	Ø 19,05	Alu
2.0 TFSI, quattro Eng.CDNC/ CADA/ CAEB/ CPMA (155kW)	08-				**CZ123**	Sachs	Ø 19,05	Alu
2.7 TDi Eng.CAMB/ CGKB (120kW)	07-				**CZ123**	Sachs	Ø 19,05	Alu
2.7 V6 TDi Eng.CAMA/ CGKA (140kW)	07-				**CZ123**	Sachs	Ø 19,05	Alu
3.0 TDi V6, quattro Eng.CDUC/ CKVB (180kW)	12-				**CZ123**	Sachs	Ø 19,05	Alu
3.0 TDi, quattro Eng.CCWB (155kW)	08-				**CZ123**	Sachs	Ø 19,05	Alu
3.0 TFSI quattro Eng.CMUA (200kW)	12-				**CZ123**	Sachs	Ø 19,05	Alu
3.0 V6 TDi Eng.CLAB (150kW)	12-				**CZ123**	Sachs	Ø 19,05	Alu
3.0 V6 TDi, quattro Eng.CAPA/ CCWA/ CCLA (176kW)	07-				**CZ123**	Sachs	Ø 19,05	Alu
3.0 V6 TFSI S4 Eng.CAKA/ CCBA/ CGWC/ CGXC (242-245kW)	09-				**CZ123**	Sachs	Ø 19,05	Alu
3.2 FSi Quattro Eng.CALA (192kW)	08-				**CZ123**	Sachs	Ø 19,05	Alu
3.2 V6 FSI, quattro Eng.CALA (196kW)	07-				**CZ123**	Sachs	Ø 19,05	Alu
A4 IV (8KH) Allroad 5/09-9/15								
2.0 TDi Eng.CAGA/ CJCA (105kW)	09-				**CZ123**	Sachs	Ø 19,05	Alu
2.0 TDi Eng.CAGB/ CJCB (100kW)	09-				**CZ123**	Sachs	Ø 19,05	Alu
2.0 TDi Eng.CAHA (125kW)	09-				**CZ123**	Sachs	Ø 19,05	Alu
2.0 TDi Eng.CAHB/ CGLD (120kW)	09-				**CZ123**	Sachs	Ø 19,05	Alu
2.0 TDi, quattro Eng.CGLC (130kW)	12-				**CZ123**	Sachs	Ø 19,05	Alu
2.0 TFSI Eng.CDNC/ CPMA (155kW)	09-				**CZ123**	Sachs	Ø 19,05	Alu
3.0 TDi Eng.CAPA/ CCWA (176kW)	09-				**CZ123**	Sachs	Ø 19,05	Alu
3.0 V6 TDi Eng.CKVB/ CDUC (180kW)	12-				**CZ123**	Sachs	Ø 19,05	Alu
A5 (8T3), Sportback (8TA), Cabrio (8F7) 5/07-								
1.8 16v TFSI, quattro, Coupe, Cabrio Eng.CABD/ CJEB (125kW)	08-				**CZ123**	Sachs	Ø 19,05	Alu
1.8 TFSI, Cabrio Eng.CDHB (118kW)	09-				**CZ123**	Sachs	Ø 19,05	Alu
2.0 TDi Eng.CAGB (100kW)	09-				**CZ123**	Sachs	Ø 19,05	Alu
2.0 TDi, Cabrio Eng.CAGA/ CMEA/ CJCA (105kW)	09-				**CZ123**	Sachs	Ø 19,05	Alu
2.0 TDi, Coupe Eng.CAHB/ CGLD (120kW)	09-				**CZ123**	Sachs	Ø 19,05	Alu
2.0 TDi, Coupe, Cabrio Eng.CAHA (125kW)	09-				**CZ123**	Sachs	Ø 19,05	Alu
2.0 TDi, Coupe, Cabrio, quattro Eng.CGLC (130kW)	11-				**CZ123**	Sachs	Ø 19,05	Alu
2.0 TFSi, Coupe Eng.CDNB/ CAEA (132kW)	09-				**CZ123**	Sachs	Ø 19,05	Alu
2.0 TFSI, quattro, Coupe, Cabrio Eng.CDNC/ CAEB (155kW)	08-				**CZ123**	Sachs	Ø 19,05	Alu
2.7 TDi Eng.CAMB/ CGKB (120kW)	07-				**CZ123**	Sachs	Ø 19,05	Alu
2.7 TDi Eng.CGKA (140kW)	09-				**CZ123**	Sachs	Ø 19,05	Alu
2.7 V6 TDi, Coupe, Cabrio Eng.CAMA (140kW)	07-				**CZ123**	Sachs	Ø 19,05	Alu
3.0 TDi quattro Eng.CCWA (176kW)	09-				**CZ123**	Sachs	Ø 19,05	Alu
3.0 TDi quattro Eng.CCWB (155kW)	08-				**CZ123**	Sachs	Ø 19,05	Alu
3.0 TDi quattro, Coupe Eng.CAPA (176kW)	07-				**CZ123**	Sachs	Ø 19,05	Alu
3.0 TFSI quattro, Coupe Eng.CMUA (200kW)	12-				**CZ123**	Sachs	Ø 19,05	Alu
3.0 V6 TDi Coupe, Cabrio Eng.CLAB (150kW)	11-				**CZ123**	Sachs	Ø 19,05	Alu
3.0 V6 TDi Coupe, Cabrio, Quattro Eng.CJGD/ CLZB/ CRCA/ CDUC/ CKVB (180kW)	11-				**CZ123**	Sachs	Ø 19,05	Alu
3.2 V6 FSI, quattro, Coupe, Cabrio Eng.CALA (195kW)	07-				**CZ123**	Sachs	Ø 19,05	Alu
RS5 4.2 V8 FSi quattro Eng.CFSA (331kW)	10-				**CZ123**	Sachs	Ø 19,05	Alu
S5 3.0 V6 TFSI quattro Cabrio, Coupe Eng.CAKA/ CGWC/ CGXC (245kW)	09-				**CZ123**	Sachs	Ø 19,05	Alu
S5 4.2 V8 quattro Eng.CAUA (260kW)	07-				**CZ123**	Sachs	Ø 19,05	Alu
A6 I (4A, C4), Avant 6/94-2/97								
1.8, quattro Eng.ADR (92kW)	10/95-4/97				**PF276**	Luc	Ø 23,81	Alu, +ABS, +EDS
	95-97				**CZ036**	Fte	Ø 22,20	
1.9 TDi Eng.1Z (66kW)	6/94-4/97				**PF276**	Luc	Ø 23,81	Alu, +ABS, +EDS
	6/94-6/95				**PF222**	Luc	Ø 23,81	Alu, +ABS, -EDS
	6/94-6/95				**PF215**	Luc	Ø 23,81	Alu, -ABS
	94-97				**CZ036**	Fte	Ø 22,20	
1.9 TDi Eng.AHU (66kW)	6/94-4/97				**PF276**	Luc	Ø 23,81	Alu, +ABS, +EDS
	6/94-6/95				**PF222**	Luc	Ø 23,81	Alu, +ABS, -EDS
	6/94-6/95				**PF215**	Luc	Ø 23,81	Alu, -ABS

AUDI

		Spare Parts	F/R	L/R	FRITECH ref.		DIMENSIONS mm.	NOTE
1.9 TDi Eng.AHU (66kW)	94-95				**CZ036**	Fte	Ø 22,20	
2.0 Eng.AAE (74kW)	6/94-4/97				**PF276**	Luc	Ø 23,81	Alu, +ABS, +EDS
	6/94-6/95				**PF222**	Luc	Ø 23,81	Alu, +ABS, -EDS
	6/94-6/95				**PF215**	Luc	Ø 23,81	Alu, -ABS
	94-97				**CZ036**	Fte	Ø 22,20	
2.0 Eng.ABK (85kW)	6/94-4/97				**PF276**	Luc	Ø 23,81	Alu, +ABS, +EDS
	6/94-6/95				**PF222**	Luc	Ø 23,81	Alu, +ABS, -EDS
	6/94-6/95				**PF215**	Luc	Ø 23,81	Alu, -ABS
	94-97				**CZ036**	Fte	Ø 22,20	
2.0 16v Eng.ACE (103kW)	6/94-4/97				**PF276**	Luc	Ø 23,81	Alu, +ABS, +EDS
	6/94-6/95				**PF222**	Luc	Ø 23,81	Alu, +ABS, -EDS
	6/94-6/95				**PF215**	Luc	Ø 23,81	Alu, -ABS
	94-97				**CZ036**	Fte	Ø 22,20	
2.0 16v quattro Eng.ACE (103kW)	6/94-4/97				**PF276**	Luc	Ø 23,81	Alu, +ABS, +EDS
	6/94-6/95				**PF222**	Luc	Ø 23,81	Alu, +ABS, -EDS
	6/94-6/95				**PF215**	Luc	Ø 23,81	Alu, -ABS
	94-97				**CZ036**	Fte	Ø 22,20	
2.2 S6 T. quattro Eng.AAN (169kW)	94-97				**CZ036**	Fte	Ø 22,20	
2.3, quattro Eng.AAR (98kW)	6/94-6/95				**PF222**	Luc	Ø 23,81	Alu, +ABS, -EDS
	6/94-95				**PF276**	Luc	Ø 23,81	Alu, +ABS, +EDS
	6/94-6/95				**PF215**	Luc	Ø 23,81	Alu, -ABS
	94-95				**CZ036**	Fte	Ø 22,20	
2.5 TDi Eng.AAT (84-85kW)	1/95-4/97				**PF276**	Luc	Ø 23,81	Alu, +ABS, +EDS
	1/95-6/95				**PF222**	Luc	Ø 23,81	Alu, +ABS, -EDS
	1/95-6/95				**PF215**	Luc	Ø 23,81	Alu, -ABS
	95-97				**CZ036**	Fte	Ø 22,20	
2.5 TDi, quattro Eng.AEL (103kW)	6/94-4/97				**PF276**	Luc	Ø 23,81	Alu, +ABS, +EDS
	6/94-6/95				**PF222**	Luc	Ø 23,81	Alu, +ABS, -EDS
	6/94-6/95				**PF215**	Luc	Ø 23,81	Alu, -ABS
	94-97				**CZ036**	Fte	Ø 22,20	
2.6 Eng.ABC (110kW)	6/94-4/97				**PF276**	Luc	Ø 23,81	Alu, +ABS, +EDS
	6/94-6/95				**PF222**	Luc	Ø 23,81	Alu, +ABS, -EDS
	6/94-6/95				**PF215**	Luc	Ø 23,81	Alu, -ABS
	94-95				**CZ036**	Fte	Ø 22,20	
2.6 quattro Eng.ABC (110kW)	6/94-4/97				**PF276**	Luc	Ø 23,81	Alu, +ABS, +EDS
	6/94-6/95				**PF222**	Luc	Ø 23,81	Alu, +ABS, -EDS
	6/94-6/95				**PF215**	Luc	Ø 23,81	Alu, -ABS
	94-95				**CZ036**	Fte	Ø 22,20	
2.8 Eng.AAH/ AEJ (128kW)	6/94-4/97				**PF276**	Luc	Ø 23,81	Alu, +ABS, +EDS
	6/94-6/95				**PF222**	Luc	Ø 23,81	Alu, +ABS, -EDS
	6/94-6/95				**PF215**	Luc	Ø 23,81	Alu, -ABS
	94-97				**CZ036**	Fte	Ø 22,20	
2.8 quattro Eng.AAH/ AEJ (128kW)	6/94-4/97				**PF276**	Luc	Ø 23,81	Alu, +ABS, +EDS
	6/94-6/95				**PF222**	Luc	Ø 23,81	Alu, +ABS, -EDS
	6/94-6/95				**PF215**	Luc	Ø 23,81	Alu, -ABS
	94-95				**CZ036**	Fte	Ø 22,20	
2.8, quattro Eng.ACK (142kW)	7/95-4/97				**PF276**	Luc	Ø 23,81	Alu, +ABS, +EDS
	95-97				**CZ036**	Fte	Ø 22,20	
4.2 S6 Plus quattro Eng.AHK (240kW)	96-97				**CZ036**	Fte	Ø 22,20	
4.2 S6 quattro Eng.AEC (213kW)	94-97				**CZ036**	Fte	Ø 22,20	
A6 II (4B, C5), Avant 1/97-2/05								
1.8 Eng.AFY (85kW)	97-05				**PF826**	Ate	Ø 25,40	Alu
	-01				**PF277**	Luc	Ø 25,40	Ch 4BZX130001-, Alu, +ABS, +ESP, LHD
	97-05				**CZ074**	Sachs	Ø 22,20	Pla
	97-05				**CZ096**	Sachs	Ø 22,20	
	97-05				**PZ085**	Sachs	Ø 19,05	Pla
	97-05				**PZ105**	Sachs	Ø 19,05	Alu
1.8 Eng.AJP/ AQE/ ARH/ ANQ (92kW)	97-05				**PF826**	Ate	Ø 25,40	Alu
	-01				**PF277**	Luc	Ø 25,40	Ch 4BZX130001-, Alu, +ABS, +ESP, LHD
	5/97-				**PF223**	Luc	Ø 23,81	Ch -4BX130000, +ABS, +EDS, LHD
	-3/98				**PF278**	Luc	Ø 25,40	Ch 4BX130001-, Alu, +EDS, RHD
	-01				**PF492**	Luc	Ø 25,40	Ch 4BZX130001-, +EDS
	01-				**PF534**	Trw	Ø 25,40	Alu
	97-05				**PZ085**	Sachs	Ø 19,05	Pla

		Spare Parts	F/R	L/R	FRITECH ref.		DIMENSIONS mm.	NOTE
1.8 Eng.AJP/ AQE/ ARH/ ANQ (92kW)	97-05				**PZ105**	Sachs	Ø 19,05	Alu
1.8 T. Eng.AEB/ ANB/ APU/ AWL (110kW)	97-05				**PF826**	Ate	Ø 25,40	Alu
	-01				**PF277**	Luc	Ø 25,40	Ch 4BZX130001-, Alu, +ABS, +ESP, LHD
	5/97-				**PF223**	Luc	Ø 23,81	Ch -4BX130000, +ABS, +EDS, LHD
	97-				**PF383**	Luc	Ø 23,81	Ch -4BZX130000, Alu, +ESP, LHD
	-3/98				**PF278**	Luc	Ø 25,40	Ch 4BX130001-, Alu, +EDS, RHD
	-01				**PF492**	Luc	Ø 25,40	Ch 4BZX130001-, +EDS, LHD
	01-				**PF534**	Trw	Ø 25,40	Alu
	97-				**CZ074**	Sachs	Ø 22,20	Pla
	97-				**CZ096**	Sachs	Ø 22,20	
	97-05				**PZ085**	Sachs	Ø 19,05	Pla
	97-05				**PZ105**	Sachs	Ø 19,05	Alu
1.8 T. Eng.AJL (132kW)	97-05				**PF826**	Ate	Ø 25,40	Alu
	-01				**PF277**	Luc	Ø 25,40	Ch 4BZX130001-, Alu, +ABS, +ESP, LHD
	97-				**PF383**	Luc	Ø 23,81	Ch -4BZX130000, Alu, +ESP, LHD
	-01				**PF492**	Luc	Ø 25,40	Ch 4BZX130001-, +EDS
	01-				**PF534**	Trw	Ø 25,40	Alu
	97-				**CZ074**	Sachs	Ø 22,20	Pla
	97-				**CZ096**	Sachs	Ø 22,20	
	97-05				**PZ085**	Sachs	Ø 19,05	Pla
	97-05				**PZ105**	Sachs	Ø 19,05	Alu
1.8 T. Eng.AWT (110kW)	97-05				**PF826**	Ate	Ø 25,40	Alu
	-01				**PF277**	Luc	Ø 25,40	Ch 4BZX130001-, Alu, +ABS, +ESP, LHD
	5/97-				**PF223**	Luc	Ø 23,81	Ch -4BX130000, +ABS, +EDS, LHD
	97-				**PF383**	Luc	Ø 23,81	Ch -4BZX130000, Alu, +ESP, LHD
	-3/98				**PF278**	Luc	Ø 25,40	Ch 4BX130001-, Alu, +EDS, RHD
	-01				**PF492**	Luc	Ø 25,40	Ch 4BZX130001-, +EDS, LHD
	01-				**PF534**	Trw	Ø 25,40	Alu
	97-				**CZ074**	Sachs	Ø 22,20	Pla
	97-				**CZ096**	Sachs	Ø 22,20	
	97-05				**PZ085**	Sachs	Ø 19,05	Pla
	97-05				**PZ105**	Sachs	Ø 19,05	Alu
1.8 T. quattro Eng.AEB/ ANB/ APU/ ARK (110kW)	97-05				**PF826**	Ate	Ø 25,40	Alu
	-01				**PF277**	Luc	Ø 25,40	Ch 4BZX130001-, Alu, +ABS, +ESP, LHD
	5/97-				**PF223**	Luc	Ø 23,81	Ch -4BX130000, +ABS, +EDS, LHD
	97-				**PF383**	Luc	Ø 23,81	Ch -4BZX130000, Alu, +ESP, LHD
	-3/98				**PF278**	Luc	Ø 25,40	Ch 4BX130001-, Alu, +EDS, RHD
	01-				**PF534**	Trw	Ø 25,40	Alu
	97-				**CZ074**	Sachs	Ø 22,20	Pla
	97-				**CZ096**	Sachs	Ø 22,20	
	97-05				**PZ085**	Sachs	Ø 19,05	Pla
	97-05				**PZ105**	Sachs	Ø 19,05	Alu
1.8 T. quattro Eng.AJL (132kW)	97-05				**PF826**	Ate	Ø 25,40	Alu
	-01				**PF277**	Luc	Ø 25,40	Ch 4BZX130001-, Alu, +ABS, +ESP, LHD
	97-				**PF383**	Luc	Ø 23,81	Ch -4BZX130000, Alu, +ESP, LHD
	01-				**PF534**	Trw	Ø 25,40	Alu
	97-				**CZ074**	Sachs	Ø 22,20	Pla
	97-				**CZ096**	Sachs	Ø 22,20	
	97-05				**PZ085**	Sachs	Ø 19,05	Pla
	97-05				**PZ105**	Sachs	Ø 19,05	Alu
1.8 T. quattro Eng.AWT (110kW)	97-05				**PF826**	Ate	Ø 25,40	Alu
	-01				**PF277**	Luc	Ø 25,40	Ch 4BZX130001-, Alu, +ABS, +ESP, LHD
	5/97-				**PF223**	Luc	Ø 23,81	Ch -4BX130000, +ABS, +EDS, LHD
	97-				**PF383**	Luc	Ø 23,81	Ch -4BZX130000, Alu, +ESP, LHD
	-3/98				**PF278**	Luc	Ø 25,40	Ch 4BX130001-, Alu, +EDS, RHD
	01-				**PF534**	Trw	Ø 25,40	Alu
	97-				**CZ074**	Sachs	Ø 22,20	Pla
	97-				**CZ096**	Sachs	Ø 22,20	
	97-05				**PZ085**	Sachs	Ø 19,05	Pla
	97-05				**PZ105**	Sachs	Ø 19,05	Alu
1.9 TDi Eng.AFN (81kW)	97-05				**PF826**	Ate	Ø 25,40	Alu
	-01				**PF277**	Luc	Ø 25,40	Ch 4BZX130001-, Alu, +ABS, +ESP, LHD
	5/97-				**PF223**	Luc	Ø 23,81	Ch -4BX130000, +ABS, +EDS, LHD
	97-				**PF383**	Luc	Ø 23,81	Ch -4BZX130000, Alu, +ESP, LHD

AUDI

		Spare Parts	F/R	L/R	FRITECH ref.		DIMENSIONS mm.	NOTE
1.9 TDi Eng.AFN (81kW)	-3/98				**PF278**	Luc	Ø 25,40	Ch 4BX130001-, Alu, +EDS, RHD
	-01				**PF492**	Luc	Ø 25,40	Ch 4BZX130001-, +EDS
	2/97-12/98				**CZ052**	Sachs	Ø 22,20	Ch -4BZW019484, Alu
	2/97-12/98				**CZ097**	Sachs	Ø 22,20	Ch -4BZW019484
					CZ074	Sachs	Ø 22,20	Ch 4BZW019485-, Pla
					CZ096	Sachs	Ø 22,20	Ch 4BZW019485-
	97-				**PZ076**	Sachs	Ø 19,05	Ch -4BZW019484, Alu
	97-				**PZ106**	Sachs	Ø 19,05	Ch -4BZW019484, Alu
					PZ085	Sachs	Ø 19,05	Ch 4BZW019485-, Pla
					PZ105	Sachs	Ø 19,05	Ch 4BZW019485-, Alu
1.9 TDi Eng.AJM (85kW)	00-05				**PF826**	Ate	Ø 25,40	Alu
	-01				**PF277**	Luc	Ø 25,40	Ch 4BZX130001-, Alu, +ABS, +ESP, LHD
	00-				**PF383**	Luc	Ø 23,81	Ch -4BZX130000, Alu, +ESP, LHD
	-01				**PF492**	Luc	Ø 25,40	Ch 4BZX130001-, +EDS
	01-				**PF534**	Trw	Ø 25,40	Alu
	00-05				**CZ074**	Sachs	Ø 22,20	Pla
	00-05				**CZ096**	Sachs	Ø 22,20	
	00-05				**PZ085**	Sachs	Ø 19,05	Pla
	00-05				**PZ105**	Sachs	Ø 19,05	Alu
1.9 TDi Eng.AVF/ AWX (96kW)	97-05				**PF826**	Ate	Ø 25,40	Alu
	-01				**PF277**	Luc	Ø 25,40	Ch 4BZX130001-, Alu, +ABS, +ESP, LHD
	01-				**PF383**	Luc	Ø 23,81	Ch -4BZX130000, Alu, +ESP, LHD
	-01				**PF492**	Luc	Ø 25,40	Ch 4BZX130001-, +EDS
	01-				**PF534**	Trw	Ø 25,40	Alu
	01-05				**CZ074**	Sachs	Ø 22,20	Pla
	01-05				**CZ096**	Sachs	Ø 22,20	
2.0 Eng.ALT (96kW)	97-05				**PF826**	Ate	Ø 25,40	Alu
	01-05				**PF534**	Trw	Ø 25,40	Alu
	01-05				**CZ074**	Sachs	Ø 22,20	Pla
	01-05				**CZ096**	Sachs	Ø 22,20	
	01-05				**PZ085**	Sachs	Ø 19,05	Pla
	01-05				**PZ105**	Sachs	Ø 19,05	Alu
2.4 Eng.AGA/ ALF/ AML/ APS/ ARJ (121kW)	97-05				**PF826**	Ate	Ø 25,40	Alu
	-01				**PF277**	Luc	Ø 25,40	Ch 4BZX130001-, Alu, +ABS, +ESP, LHD
	5/97-				**PF223**	Luc	Ø 23,81	Ch -4BX130000, +ABS, +EDS, LHD
	97-				**PF383**	Luc	Ø 23,81	Ch -4BZX130000, Alu, +ESP, LHD
	-3/98				**PF278**	Luc	Ø 25,40	Ch 4BX130001-, Alu, +EDS, RHD
	-01				**PF492**	Luc	Ø 25,40	Ch 4BZX130001-, +EDS
	01-				**PF534**	Trw	Ø 25,40	Alu
	97-				**CZ074**	Sachs	Ø 22,20	Pla
	97-				**CZ096**	Sachs	Ø 22,20	
	97-05				**PZ085**	Sachs	Ø 19,05	Pla
	97-05				**PZ105**	Sachs	Ø 19,05	Alu
2.4 Eng.ALW/ ARN/ ASM (100kW)	97-05				**PF826**	Ate	Ø 25,40	Alu
	-01				**PF277**	Luc	Ø 25,40	Ch 4BZX130001-, Alu, +ABS, +ESP, LHD
	98-05				**PF383**	Luc	Ø 23,81	Ch -4BZX130000, Alu, +ESP, LHD
	-01				**PF492**	Luc	Ø 25,40	Ch 4BZX130001-, +EDS
	01-				**PF534**	Trw	Ø 25,40	Alu
	98-05				**CZ074**	Sachs	Ø 22,20	Pla
	98-05				**CZ096**	Sachs	Ø 22,20	
	98-05				**PZ085**	Sachs	Ø 19,05	Pla
	98-05				**PZ105**	Sachs	Ø 19,05	Alu
2.4 quattro Eng.AGA/ ALF/ AML/ APS/ ARJ (121kW)	97-05				**PF826**	Ate	Ø 25,40	Alu
	-01				**PF277**	Luc	Ø 25,40	Alu, +ABS, +ESP, LHD
	5/97-				**PF223**	Luc	Ø 23,81	+ABS, +EDS, LHD
	97-				**PF383**	Luc	Ø 23,81	Alu, +ESP, LHD
	-01				**PF492**	Luc	Ø 25,40	+EDS
	-3/98				**PF278**	Luc	Ø 25,40	Alu, +EDS, RHD
	01-				**PF534**	Trw	Ø 25,40	Alu
	97-				**CZ074**	Sachs	Ø 22,20	Pla
	97-				**CZ096**	Sachs	Ø 22,20	
	97-05				**PZ085**	Sachs	Ø 19,05	Pla
	97-05				**PZ105**	Sachs	Ø 19,05	Alu

		Spare Parts	F/R	L/R	FRITECH ref.		DIMENSIONS mm.	NOTE
2.4, quattro Eng.AJG/ AMM/ APZ (120kW)	97-05				**PF826**	Ate	Ø 25,40	Alu
	01-				**PF534**	Trw	Ø 25,40	Alu
	97-				**CZ074**	Sachs	Ø 22,20	Pla
	97-				**CZ096**	Sachs	Ø 22,20	
	97-05				**PZ085**	Sachs	Ø 19,05	Pla
	97-05				**PZ105**	Sachs	Ø 19,05	Alu
2.4, quattro Eng.APC (115kW)	97-05				**PF826**	Ate	Ø 25,40	Alu
	-01				**PF277**	Luc	Ø 25,40	Ch 4BZX130001-, Alu, +ABS, +ESP, LHD
	97-				**PF383**	Luc	Ø 23,81	Ch -4BZX130000, Alu, +ESP, LHD
	-01				**PF492**	Luc	Ø 25,40	Ch 4BZX130001-, +EDS
	01-				**PF534**	Trw	Ø 25,40	Alu
	97-				**CZ074**	Sachs	Ø 22,20	Pla
	97-				**CZ096**	Sachs	Ø 22,20	
	97-05				**PZ085**	Sachs	Ø 19,05	Pla
	97-05				**PZ105**	Sachs	Ø 19,05	Alu
2.4, quattro Eng.BDV (125kW)	97-05				**PF826**	Ate	Ø 25,40	Alu
	01-				**PF534**	Trw	Ø 25,40	Alu
	01-				**CZ074**	Sachs	Ø 22,20	Pla
	01-				**CZ096**	Sachs	Ø 22,20	
	01-				**PZ085**	Sachs	Ø 19,05	Pla
	01-				**PZ105**	Sachs	Ø 19,05	Alu
2.5 TDi Eng.AFB/ AKN (110kW)	97-05				**PF826**	Ate	Ø 25,40	Alu
	-01				**PF277**	Luc	Ø 25,40	Ch 4BZX130001-, Alu, +ABS, +ESP, LHD
	5/97-				**PF223**	Luc	Ø 23,81	Ch -4BX130000, +ABS, +EDS, LHD
	97-				**PF383**	Luc	Ø 23,81	Ch -4BZX130000, Alu, +ESP, LHD
	-3/98				**PF278**	Luc	Ø 25,40	Ch 4BX130001-, Alu, +EDS, RHD
	-01				**PF492**	Luc	Ø 25,40	Ch 4BZX130001-, +EDS
	01-				**PF534**	Trw	Ø 25,40	Alu
	97-				**CZ074**	Sachs	Ø 22,20	Pla
	97-				**CZ096**	Sachs	Ø 22,20	
	97-05				**PZ085**	Sachs	Ø 19,05	Pla
	97-05				**PZ105**	Sachs	Ø 19,05	Alu
2.5 TDi Eng.AKE/ BAU/ BDH/ BND (132kW)	97-05				**PF826**	Ate	Ø 25,40	Alu
	-01				**PF277**	Luc	Ø 25,40	Ch 4BZX130001-, Alu, +ABS, +ESP, LHD
	00-				**PF383**	Luc	Ø 23,81	Ch -4BZX130000, Alu, +ESP, LHD
	-01				**PF492**	Luc	Ø 25,40	Ch 4BZX130001-, +EDS
	01-				**PF534**	Trw	Ø 25,40	Alu
	00-05				**CZ074**	Sachs	Ø 22,20	Pla
	00-05				**CZ096**	Sachs	Ø 22,20	
	00-05				**PZ085**	Sachs	Ø 19,05	Pla
	00-05				**PZ105**	Sachs	Ø 19,05	Alu
2.5 TDi Eng.AYM (114kW)	97-05				**PF826**	Ate	Ø 25,40	Alu
	01-				**PF534**	Trw	Ø 25,40	Alu
	01-05				**CZ074**	Sachs	Ø 22,20	Pla
	01-05				**CZ096**	Sachs	Ø 22,20	
2.5 TDi Eng.BCZ/ BDG/ BFC (120kW)	97-05				**PF826**	Ate	Ø 25,40	Alu
	02-				**PF534**	Trw	Ø 25,40	Alu
	02-				**CZ074**	Sachs	Ø 22,20	Pla
	02-				**CZ096**	Sachs	Ø 22,20	
2.5 TDi quattro Eng.AFB/ AKN (110kW)	97-05				**PF826**	Ate	Ø 25,40	Alu
	-01				**PF277**	Luc	Ø 25,40	Ch 4BZX130001-, Alu, +ABS, +ESP, LHD
	5/97-				**PF223**	Luc	Ø 23,81	Ch -4BX130000, +ABS, +EDS, LHD
	97-				**PF383**	Luc	Ø 23,81	Ch -4BZX130000, Alu, +ESP, LHD
	-3/98				**PF278**	Luc	Ø 25,40	Ch 4BX130001-, Alu, +EDS, RHD
	-01				**PF492**	Luc	Ø 25,40	Ch 4BZX130001-, +EDS
	01-				**PF534**	Trw	Ø 25,40	Alu
	97-				**CZ074**	Sachs	Ø 22,20	Pla
	97-				**CZ096**	Sachs	Ø 22,20	
	97-05				**PZ085**	Sachs	Ø 19,05	Pla
	97-05				**PZ105**	Sachs	Ø 19,05	Alu
2.5 TDi quattro Eng.AKE/ BAU/ BDH (132kW)	97-05				**PF826**	Ate	Ø 25,40	Alu
	-01				**PF277**	Luc	Ø 25,40	Ch 4BZX130001-, Alu, +ABS, +ESP, LHD
	00-				**PF383**	Luc	Ø 23,81	Ch -4BZX130000, Alu, +ESP, LHD
	-01				**PF492**	Luc	Ø 25,40	Ch 4BZX130001-, +EDS

AUDI

		Spare Parts	F/R	L/R	FRITECH ref.		DIMENSIONS mm.	NOTE
2.5 TDi quattro Eng.AKE/ BAU/ BDH (132kW)	01-				**PF534**	Trw	Ø 25,40	Alu
	00-				**CZ074**	Sachs	Ø 22,20	Pla
	00-				**CZ096**	Sachs	Ø 22,20	
	00-				**PZ085**	Sachs	Ø 19,05	Pla
	00-				**PZ105**	Sachs	Ø 19,05	Alu
2.7 T, quattro Eng.AJK/ AZA (169kW)	97-05				**PF826**	Ate	Ø 25,40	Alu
	-01				**PF277**	Luc	Ø 25,40	Ch 4BZX130001-, Alu, +ABS, +ESP, LHD
	97-				**PF383**	Luc	Ø 23,81	Ch -4BZX130000, Alu, +ESP, LHD
	-01				**PF492**	Luc	Ø 25,40	Ch 4BZX130001-, +EDS
	01-				**PF534**	Trw	Ø 25,40	Alu
	97-05				**CZ074**	Sachs	Ø 22,20	Pla
	97-05				**CZ096**	Sachs	Ø 22,20	
	97-05				**PZ085**	Sachs	Ø 19,05	Pla
	97-05				**PZ105**	Sachs	Ø 19,05	Alu
2.7 T. quattro Eng.ARE/ BES (184kW)	97-05				**PF826**	Ate	Ø 25,40	Alu
	-01				**PF277**	Luc	Ø 25,40	Ch 4BZX130001-, Alu, +ABS, +ESP, LHD
	01-				**PF383**	Luc	Ø 23,81	Ch -4BZX130000, Alu, +ESP, LHD
	-01				**PF492**	Luc	Ø 25,40	Ch 4BZX130001-, +EDS
	01-				**PF534**	Trw	Ø 25,40	Alu
	01-				**CZ074**	Sachs	Ø 22,20	Pla
	01-				**CZ096**	Sachs	Ø 22,20	
2.8 Eng.ACK/ ALG/ AMX/ APR/ AQD (142kW)	97-05				**PF826**	Ate	Ø 25,40	Alu
	-01				**PF277**	Luc	Ø 25,40	Ch 4BZX130001-, Alu, +ABS, +ESP, LHD
	5/97-				**PF223**	Luc	Ø 23,81	Ch -4BX130000, +ABS, +EDS, LHD
	97-				**PF383**	Luc	Ø 23,81	Ch -4BZX130000, Alu, +ESP, LHD
	-3/98				**PF278**	Luc	Ø 25,40	Ch 4BX130001-, Alu, +EDS, RHD
	-01				**PF492**	Luc	Ø 25,40	Ch 4BZX130001-, +EDS
	01-				**PF534**	Trw	Ø 25,40	Alu
	97-				**CZ074**	Sachs	Ø 22,20	Pla
	97-				**CZ096**	Sachs	Ø 22,20	
	97-05				**PZ085**	Sachs	Ø 19,05	Pla
	97-05				**PZ105**	Sachs	Ø 19,05	Alu
2.8 quattro Eng.ACK/ ALG/ AMX/ APR/ AQD (142kW)	97-05				**PF826**	Ate	Ø 25,40	Alu
	-01				**PF277**	Luc	Ø 25,40	Ch 4BZX130001-, Alu, +ABS, +ESP, LHD
	5/97-				**PF223**	Luc	Ø 23,81	Ch -4BX130000, +ABS, +EDS, LHD
	97-				**PF383**	Luc	Ø 23,81	Ch -4BZX130000, Alu, +ESP, LHD
	-3/98				**PF278**	Luc	Ø 25,40	Ch 4BX130001-, Alu, +EDS, RHD
	-01				**PF492**	Luc	Ø 25,40	Ch 4BZX130001-, +EDS
	01-				**PF534**	Trw	Ø 25,40	Alu
	97-				**CZ074**	Sachs	Ø 22,20	Pla
	97-				**CZ096**	Sachs	Ø 22,20	
	97-05				**PZ085**	Sachs	Ø 19,05	Pla
	97-05				**PZ105**	Sachs	Ø 19,05	Alu
2.8, quattro Eng.AGE (132kW)	97-05				**PF826**	Ate	Ø 25,40	Alu
	-01				**PF277**	Luc	Ø 25,40	Ch 4BZX130001-, Alu, +ABS, +ESP, LHD
	97-				**PF383**	Luc	Ø 23,81	Ch -4BZX130000, Alu, +ESP, LHD
	-01				**PF492**	Luc	Ø 25,40	Ch 4BZX130001-, +EDS
	97-				**CZ074**	Sachs	Ø 22,20	Pla
	97-				**CZ096**	Sachs	Ø 22,20	
	97-05				**PZ085**	Sachs	Ø 19,05	Pla
	97-05				**PZ105**	Sachs	Ø 19,05	Alu
2.8, quattro Eng.ATX (140kW)	99-05				**PF826**	Ate	Ø 25,40	Alu
	-01				**PF277**	Luc	Ø 25,40	Ch 4BZX130001-, Alu, +ABS, +ESP, LHD
	99-				**PF383**	Luc	Ø 23,81	Ch -4BZX130000, Alu, +ESP, LHD
	-01				**PF492**	Luc	Ø 25,40	Ch 4BZX130001-, +EDS
	01-				**PF534**	Trw	Ø 25,40	Alu
	99-05				**CZ074**	Sachs	Ø 22,20	Pla
	99-05				**CZ096**	Sachs	Ø 22,20	
	99-05				**PZ085**	Sachs	Ø 19,05	Pla
	99-05				**PZ105**	Sachs	Ø 19,05	Alu
3.0, quattro Eng.ASN (162kW)	97-05				**PF826**	Ate	Ø 25,40	Alu
	01-				**PF534**	Trw	Ø 25,40	Alu
	01-				**CZ074**	Sachs	Ø 22,20	Pla
	01-				**CZ096**	Sachs	Ø 22,20	

		Spare Parts	F/R	L/R	FRITECH ref.		DIMENSIONS mm.	NOTE
3.0, quattro Eng.BBJ (160kW)	01-04				**PF826**	Ate	Ø 25,40	Alu
	01-04				**PF534**	Trw	Ø 25,40	Alu
4.2 quattro Eng.ARS/ ASG/ AWN (220kW)	97-05				**PF826**	Ate	Ø 25,40	Alu
	98-05				**CZ074**	Sachs	Ø 22,20	Pla
	98-05				**CZ096**	Sachs	Ø 22,20	
	98-05				**PZ085**	Sachs	Ø 19,05	Pla
	98-05				**PZ105**	Sachs	Ø 19,05	Alu
4.2 RS6 Eng.BCY (331kW)	02-05				**PF879**	Trw	Ø 26,99	Alu
4.2 S6 quattro Eng.ANK/ AQJ (250kW)	97-05				**PF826**	Ate	Ø 25,40	Alu
	01-				**PF534**	Trw	Ø 25,40	Alu
	99-05				**CZ074**	Sachs	Ø 22,20	Pla
	99-05				**CZ096**	Sachs	Ø 22,20	
	99-05				**PZ085**	Sachs	Ø 19,05	Pla
	99-05				**PZ105**	Sachs	Ø 19,05	Alu
A6 II Allroad (4BH, C5) 5/00-7/06								
2.5 TDi quattro Eng.AKE/ BAU (132kW)	5/00-				**PF277**	Luc	Ø 25,40	Alu, +ABS
	5/00-				**CZ074**	Sachs	Ø 22,20	Pla
	5/00-				**CZ096**	Sachs	Ø 22,20	
	5/00-01				**PZ085**	Sachs	Ø 19,05	Pla
	5/00-01				**PZ105**	Sachs	Ø 19,05	Alu
2.5 TDi quattro Eng.BCZ (120kW)	5/03-				**PF277**	Luc	Ø 25,40	Alu, +ABS
	5/03-				**CZ074**	Sachs	Ø 22,20	Pla
	5/03-				**CZ096**	Sachs	Ø 22,20	
2.7 T. quattro Eng.ARE/ BES (184kW)	5/00-				**PF277**	Luc	Ø 25,40	Alu, +ABS
	00-				**CZ074**	Sachs	Ø 22,20	Pla
	00-				**CZ096**	Sachs	Ø 22,20	
	5/00-01				**PZ085**	Sachs	Ø 19,05	Pla
	5/00-01				**PZ105**	Sachs	Ø 19,05	Alu
4.2 V8 Eng.BAS (220kW)	7/02-				**PF277**	Luc	Ø 25,40	Alu, +ABS
	7/02-				**CZ074**	Sachs	Ø 22,20	Pla
	7/02-				**CZ096**	Sachs	Ø 22,20	
A6 III (4F2), Avant 5/04-3/11								
2.0 TDi Eng.BLB/ BRE (103kW)	04-				**PF879**	Trw	Ø 26,99	Alu
2.0 TDi Eng.BNA/ BRF/ CAGB (100kW)	05-				**PF879**	Trw	Ø 26,99	Alu
2.0 TDi Eng.BVG (89kW)	05-				**PF879**	Trw	Ø 26,99	Alu
2.0 TDi Eng.CAHA (125kW)	08-				**PF879**	Trw	Ø 26,99	Alu
2.0 TFSI Eng.BPJ (125kW)	05-				**PF879**	Trw	Ø 26,99	Alu
2.4, quattro Eng.BDW (130kW)	04-				**PF879**	Trw	Ø 26,99	Alu
2.7 TDi V6 Eng.CANA/ CANC (140kW)	08-				**PF879**	Trw	Ø 26,99	Alu
2.7 TDi, quattro Eng.BPP (132kW)	04-				**PF879**	Trw	Ø 26,99	Alu
2.7 TDi, quattro Eng.BSG/ CANB/ CAND (120kW)	04-				**PF879**	Trw	Ø 26,99	Alu
2.8 V6 FSi Eng.CCDA (140kW)	08-				**PF879**	Trw	Ø 26,99	Alu
2.8 V6 FSi Eng.CCEA (162kW)	08-				**PF879**	Trw	Ø 26,99	Alu
2.8 V6 FSi, quattro Eng.BDX (154kW)	07-				**PF879**	Trw	Ø 26,99	Alu
3.0 TDi quattro Eng.BMK (165kW)	04-				**PF879**	Trw	Ø 26,99	Alu
3.0 TDi quattro Eng.BNG/ CDYB (155kW)	04-				**PF879**	Trw	Ø 26,99	Alu
3.0 TDi V6 24v, quattro Eng.ASB (171kW)	06-				**PF879**	Trw	Ø 26,99	Alu
3.0 TDi V6, quattro Eng.CDYA/ CDYC (176kW)	08-				**PF879**	Trw	Ø 26,99	Alu
3.0 TFSi quattro Eng.CCAA (220kW)	08-				**PF879**	Trw	Ø 26,99	Alu
3.0 V6 TFSi quattro Eng.CAJA (213kW)	08-				**PF879**	Trw	Ø 26,99	Alu
3.0, quattro Eng.BBJ (160kW)	04-06				**PF879**	Trw	Ø 26,99	Alu
3.2 FSi Eng.CALA (195kW)	09-				**PF879**	Trw	Ø 26,99	Alu
3.2 FSI, quattro Eng.AUK/ BKH (188kW)	04-				**PF879**	Trw	Ø 26,99	Alu
4.2 quattro Eng.BAT (246kW)	04-				**PF879**	Trw	Ø 26,99	Alu
4.2 V8 FSi quattro Eng.BVJ (257kW)	06-				**PF879**	Trw	Ø 26,99	Alu
S6 5.2 V10 quattro Eng.BXA (315-320kW)	06-				**PF879**	Trw	Ø 26,99	Alu
A6 III Allroad (4FH) 8/06-1/11								
2.0 16v TFSi Eng.BPJ/ BYK (125kW)	08-				**PF879**	Trw	Ø 26,99	Alu
2.0 TDi Eng.BNA/ BRF (100kW)	08-				**PF879**	Trw	Ø 26,99	Alu
2.7 TDi quattro Eng.BSG (120kW)	06-				**PF879**	Trw	Ø 26,99	Alu
2.7 TDi V6 quattro Eng.BPP (132kW)	05-				**PF879**	Trw	Ø 26,99	Alu

AUDI

		Spare Parts	F/R	L/R	FRITECH ref.		DIMENSIONS mm.	NOTE
2.7 TDi V6 quattro Eng.CAMA/ CANA/ CANC (140kW)	08-				**PF879**	Trw	Ø 26,99	Alu
2.8 V6 FSi Eng.CCDA (140kW)	08-				**PF879**	Trw	Ø 26,99	Alu
2.8 V6 FSI Eng.CCEA (162kW)	08-				**PF879**	Trw	Ø 26,99	Alu
2.8 V6 FSi, quattro Eng.BDX (155kW)	07-				**PF879**	Trw	Ø 26,99	Alu
3.0 TDi quattro Eng.BNG/ CDYB (155kW)	06-				**PF879**	Trw	Ø 26,99	Alu
3.0 TDi V6 quattro Eng.ASB (171kW)	06-				**PF879**	Trw	Ø 26,99	Alu
3.0 TDi V6 quattro Eng.CDYA (176kW)	08-				**PF879**	Trw	Ø 26,99	Alu
3.0 V6 TFSi quattro Eng.CAJA (213kW)	08-				**PF879**	Trw	Ø 26,99	Alu
3.2 V6 FSi quattro Eng.AUK (188kW)	06-				**PF879**	Trw	Ø 26,99	Alu
4.2 V8 FSi quattro Eng.BVJ (257kW)	06-				**PF879**	Trw	Ø 26,99	Alu
5.2 V10 quattro Eng.BXA (320kW)	08-				**PF879**	Trw	Ø 26,99	Alu
A6 IV (4G2, 5), Avant 2/11-								
2.0 TDi Eng.CGLC/ CMGB (130kW)	11-				**CZ123**	Sachs	Ø 19,05	Alu
2.0 TDi Eng.CGLD (120kW)	11-				**CZ123**	Sachs	Ø 19,05	Alu
2.0 TDi Eng.CGLE (100kW)	12-				**CZ123**	Sachs	Ø 19,05	Alu
2.0 TFSi Eng.CAEB (155kW)	-5/13				**CZ123**	Sachs	Ø 19,05	Alu
2.0 TFSi Eng.CDNB (132kW)	11-				**CZ123**	Sachs	Ø 19,05	Alu
	11-				**CZ123**	Sachs	Ø 19,05	Alu
2.8 FSi, quattro Eng.CHVA (150kW)	11-				**CZ123**	Sachs	Ø 19,05	Alu
3.0 TDi quattro Eng.CDUC/ CKVB (180kW)	11-				**CZ123**	Sachs	Ø 19,05	Alu
3.0 TDI Quattro Eng.CGQB (230kW)	11-				**CZ123**	Sachs	Ø 19,05	Alu
3.0 TDi, quattro Eng.CLAA/ CLAB (150kW)	11-				**CZ123**	Sachs	Ø 19,05	Alu
3.0 TFSi Eng.CTUA/ CGWD/ CGXB (228kW)	11-				**CZ123**	Sachs	Ø 19,05	Alu
3.0 TFSi quattro Eng.CGWB (220kW)	-5/12				**CZ123**	Sachs	Ø 19,05	Alu
S6 Quattro Eng.CEUC (309kW)	12-				**CZ123**	Sachs	Ø 19,05	Alu
A6 IV Allroad 4/12-								
3.0 TDI Eng.CDUC/ CKVB (180kW)	12-				**CZ123**	Sachs	Ø 19,05	Alu
3.0 TDI Eng.CGQB (230kW)	12-				**CZ123**	Sachs	Ø 19,05	Alu
3.0 TDI Eng.CLAA (150kW)	12-				**CZ123**	Sachs	Ø 19,05	Alu
3.0 TFSi Eng.CGWD (228kW)	12-				**CZ123**	Sachs	Ø 19,05	Alu
A8 I (4D2, 4D8) 3/94-9/02								
2,8 quattro Eng.AEJ (120kW)	95-96				**PF277**	Luc	Ø 25,40	Alu, +ABS, +ESP
	95-96				**PF492**	Luc	Ø 25,40	+ABS, -ESP, LHD
	95-96				**CZ036**	Fte	Ø 22,20	Ch -4DX004999
2.5 TDi, quattro Eng.AFB (110kW)	1/97-00				**PF277**	Luc	Ø 25,40	Alu, +ABS, +ESP, LHD
	1/97-11/99				**PF492**	Luc	Ø 25,40	+ABS, -ESP, LHD
	1/97-00				**CZ074**	Sachs	Ø 22,20	Pla
	1/97-00				**CZ096**	Sachs	Ø 22,20	
2.5 TDi, quattro Eng.AKE (132kW)	00-02				**PF277**	Luc	Ø 25,40	Alu, +ABS, +ESP, LHD
	00-02				**PF492**	Luc	Ø 25,40	+ABS, -ESP, LHD
	00-02				**CZ074**	Sachs	Ø 22,20	Pla
	00-02				**CZ096**	Sachs	Ø 22,20	
2.5 TDi, quattro Eng.AKN (110kW)	1/97-00				**PF277**	Luc	Ø 25,40	Alu, +ABS, +ESP, LHD
	1/97-11/99				**PF492**	Luc	Ø 25,40	+ABS, -ESP, LHD
	1/97-00				**CZ074**	Sachs	Ø 22,20	Pla
	1/97-00				**CZ096**	Sachs	Ø 22,20	
2.8 Eng.AEJ (120kW)	95-96				**PF277**	Luc	Ø 25,40	Alu, +ABS, +ESP
	95-96				**PF492**	Luc	Ø 25,40	+ABS, -ESP, LHD
	95-96				**CZ036**	Fte	Ø 22,20	
2.8, quattro Eng.AAH (128kW)	3/94-96				**PF277**	Luc	Ø 25,40	Alu, +ABS, +ESP
	3/94-96				**PF492**	Luc	Ø 25,40	+ABS, -ESP, LHD
	95-96				**CZ036**	Fte	Ø 22,20	
2.8, quattro Eng.ACK/ ALG/ AMX/ APR/ AQD (142kW)	96-02				**PF277**	Luc	Ø 25,40	Alu, +ABS, +ESP
	96-02				**PF492**	Luc	Ø 25,40	+ABS, -ESP, LHD
	96-02				**CZ036**	Fte	Ø 22,20	Ch -4DY020000
					CZ074	Sachs	Ø 22,20	Ch 4D1000001-, Pla
					CZ096	Sachs	Ø 22,20	Ch 4D1000001-
3.3 TDi quattro Eng.AKF (165kW)	00-02				**PF277**	Luc	Ø 25,40	Alu, +ABS, +ESP
	00-02				**PF492**	Luc	Ø 25,40	+ABS, -ESP, LHD
3.7, quattro Eng.AEW/ AKJ (169kW)	95-98				**PF277**	Luc	Ø 25,40	Alu, +ABS, +ESP
	95-98				**PF492**	Luc	Ø 25,40	+ABS, -ESP, LHD
3.7, quattro Eng.AKC/ AQG (191kW)	98-02				**PF277**	Luc	Ø 25,40	Alu, +ABS, +ESP
	98-02				**PF492**	Luc	Ø 25,40	+ABS, -ESP, LHD

		Spare Parts	F/R	L/R	FRITECH ref.		DIMENSIONS mm.	NOTE
4.2 quattro Eng.ABZ/ AKG (220kW)	3/94-98				**PF277**	Luc	Ø 25,40	Alu, +ABS, +ESP
	94-98				**CZ036**	Fte	Ø 22,20	
4.2 quattro Eng.AEM (180kW)	3/94-96				**PF277**	Luc	Ø 25,40	Alu, +ABS, +ESP
	94-96				**CZ036**	Fte	Ø 22,20	
4.2 quattro Eng.AQF/ AUW/ AUX (228kW)	98-02				**PF277**	Luc	Ø 25,40	Alu, +ABS, +ESP
4.2 quattro Eng.ARU (175kW)	99-00				**PF277**	Luc	Ø 25,40	Alu, +ABS, +ESP
4.2 S8 quattro Eng.AHC/ AKH (250kW)	7/96-99				**PF277**	Luc	Ø 25,40	Alu, +ABS, +ESP
4.2 S8 quattro Eng.AQH/ AVP (265kW)	99-02				**PF277**	Luc	Ø 25,40	Alu, +ABS, +ESP
6.0 W12 quattro Eng.AZC (309kW)	01-02				**PF277**	Luc	Ø 25,40	Alu, +ABS, +ESP
Cabrio (8G7, B4) 5/91-8/00								
1.8 Eng.ADR (92kW)	97-00				**PF222**	Luc	Ø 23,81	Alu, +ABS, LHD
	97-00				**PF215**	Luc	Ø 23,81	Alu, -ABS, LHD
	97-00				**CZ036**	Fte	Ø 22,20	
1.9 TDi Eng.1Z (66kW)	7/95-8/00				**PF222**	Luc	Ø 23,81	Alu, +ABS, LHD
	7/95-8/00				**PF215**	Luc	Ø 23,81	Alu, -ABS, LHD
	95-00				**CZ036**	Fte	Ø 22,20	
1.9 TDi Eng.AHU (66kW)	7/95-8/00				**PF222**	Luc	Ø 23,81	Alu, +ABS, LHD
	7/95-8/00				**PF215**	Luc	Ø 23,81	Alu, -ABS, LHD
	95-00				**CZ036**	Fte	Ø 22,20	
2.0 16v Eng.ACE (103kW)	95-96				**PF222**	Luc	Ø 23,81	Alu, +ABS, LHD
	95-96				**PF215**	Luc	Ø 23,81	Alu, -ABS, LHD
	95-96				**CZ036**	Fte	Ø 22,20	
2.0 E Eng.ABK (85kW)	3/93-7/98				**PF222**	Luc	Ø 23,81	Alu, +ABS, LHD
	3/93-7/98				**PF215**	Luc	Ø 23,81	Alu, -ABS, LHD
	93-98				**CZ036**	Fte	Ø 22,20	
2.3 E Eng.NG (98kW)	-6/94				**PF222**	Luc	Ø 23,81	Ch 8GP000001-, Alu, +ABS, LHD
	-6/94				**PF215**	Luc	Ø 23,81	Ch 8GP000001-, Alu, -ABS, LHD
	91-94				**CZ036**	Fte	Ø 22,20	
2.6 Eng.ABC (110kW)	93-00				**PF222**	Luc	Ø 23,81	Alu, +ABS, LHD
	93-00				**PF215**	Luc	Ø 23,81	Alu, -ABS, LHD
	93-00				**CZ036**	Fte	Ø 22,20	
2.8 Eng.AAH (128kW)	11/92-8/00				**PF222**	Luc	Ø 23,81	Alu, +ABS, LHD
	11/92-8/00				**PF215**	Luc	Ø 23,81	Alu, -ABS, LHD
	92-00				**CZ036**	Fte	Ø 22,20	
Coupe I (81, 85) 7/80-10/88								
1.6 Eng.YN (55kW)	80-81		R		**CF001**		Ø 14,29	-CF, M/T
	80-81		R		**CF532**		Ø 14,29	Alu
	80-81		R		**CF080**		Ø 15,87	A/T
	80-81				**PF058**		Ø 20,64	M/T
	80-81				**PF060**		Ø 20,64	A/T
1.6 Eng.YV (63kW)	82-88		R		**CF001**		Ø 14,29	
	82-88		R		**CF532**		Ø 14,29	Alu
1.8 Eng.DD (55kW)	8/81-		R		**CF001**		Ø 14,29	Ch -85E220000, -CF, M/T
	81-83		R		**CF532**		Ø 14,29	Alu
	8/81-		R		**CF080**		Ø 15,87	Ch -85E220000, A/T
	81-83		R		**CF725**		Ø 15,87	Alu
					PF179		Ø 20,64	Ch 85F000001-
1.8 GT Eng.DS/ JV (66kW)	82-88		R		**CF001**		Ø 14,29	Ch -85ZE220000, -CF, M/T
	82-88		R		**CF532**		Ø 14,29	Alu
	82-		R		**CF080**		Ø 15,87	Ch -85ZE220000, A/T
	82-88		R		**CF725**		Ø 15,87	Alu
	-10/88				**PF179**		Ø 20,64	Ch 85F000001-
1.8 GT Eng.JN (68kW)	80-88		R		**CF001**		Ø 14,29	Ch -85ZE220000, M/T
	82-88		R		**CF532**		Ø 14,29	Alu
	80-88		R		**CF080**		Ø 15,87	Ch -85ZE220000, A/T
	80-88		R		**CF725**		Ø 15,87	Alu
1.8 GT Eng.PV (79kW)	86-87		R		**CF001**		Ø 14,29	Ch -85ZE220000, -CF, M/T
	86-87		R		**CF532**		Ø 14,29	Alu
	86-		R		**CF080**		Ø 15,87	Ch -85ZE220000, A/T
	86-87		R		**CF725**		Ø 15,87	Alu
					PF179		Ø 20,64	Ch 85F000001-
1.8 GT Eng.SF (65kW)	86-88		R		**CF001**		Ø 14,29	Ch -85ZE220000, M/T
	86-88		R		**CF532**		Ø 14,29	Alu
	86-		R		**CF080**		Ø 15,87	Ch -85ZE220000, A/T

AUDI

		Spare Parts	F/R	L/R	FRITECH ref.		DIMENSIONS mm.	NOTE
1.8 GT Eng.SF (65kW)	86-88		R		**CF725**		Ø 15,87	Alu
	-10/88				**PF179**		Ø 20,64	Ch 85F000001-
1.8 GT quattro Eng.DS/ JN/ NE (66kW)	85-88		R		**CF001**		Ø 14,29	Ch -85ZE220000, M/T
	85-88		R		**CF532**		Ø 14,29	Alu
	86-		R		**CF080**		Ø 15,87	Ch -85ZE220000, A/T
	85-88		R		**CF725**		Ø 15,87	Alu
1.8 GT, quattro Eng.DZ (82kW)	84-88		R		**CF001**		Ø 14,29	Ch -85ZE220000, M/T
	84-88		R		**CF532**		Ø 14,29	Alu
	86-		R		**CF080**		Ø 15,87	Ch -85ZE220000, A/T
	84-88		R		**CF725**		Ø 15,87	Alu
1.9 Eng.WN (85kW)	10/80-83		R		**CF080**		Ø 15,87	
	80-83		R		**CF725**		Ø 15,87	Alu
	10/80-				**PF060**		Ø 20,64	Ch -85C250000, RHD
	10/80-				**PF178**		Ø 20,64	Ch -85C250000, LHD
2.0 Eng.HP/ JS (85kW)	9/83-7/86		R		**CF000**		Ø 17,46	
2.0 Eng.SK (83kW)	86-7/87		R		**CF000**		Ø 17,46	
2.1 GT Eng.KE/ KL (96kW)	82-				**PF178**		Ø 20,64	Ch -85C250000, LHD
2.2 GT Eng.KX (85kW)	81-87		R		**CF000**	Vag	Ø 17,46	
	7/81-				**PF178**		Ø 20,64	Ch -85C250000, LHD
2.2 GT, quattro Eng.KV (100kW)	81-87		R		**CF000**	Vag	Ø 17,46	
	84-				**PF178**		Ø 20,64	Ch -85C250000, LHD
2.2 quattro Eng.JT (88kW)	81-87		R		**CF000**	Vag	Ø 17,46	
Coupe II (89, 8B) 10/88-12/96								
1.8 Eng.DZ (82kW)	89-91				**CZ036**	Fte	Ø 22,20	
2.0 Eng.3A (83kW)	89-90				**CZ036**	Fte	Ø 22,20	
2.0 Eng.AAD/ ABK (85kW)	89-96				**CZ036**	Fte	Ø 22,20	
2.0 16v Eng.6A (101kW)	1/92-7/92				**PF222**	Luc	Ø 23,81	Alu, +ABS, LHD
	1/92-7/92				**PF215**	Luc	Ø 23,81	Alu, -ABS, LHD
	1/92-7/92				**CZ036**	Fte	Ø 22,20	
2.0 16v Eng.ACE (103kW)	8/92-12/96				**PF222**	Luc	Ø 23,81	Alu, +ABS, LHD
	8/92-96				**PF215**	Luc	Ø 23,81	Alu, -ABS, LHD
	92-96				**CZ036**	Fte	Ø 22,20	
2.0 20v, quattro Eng.NM (118kW)	89-91				**CZ036**	Fte	Ø 22,20	
2.2 quattro Eng.KV (100kW)	88-91				**CZ036**	Fte	Ø 22,20	
2.2 S2 quattro Eng.3B (162kW)	90-92				**CZ036**	Fte	Ø 22,20	
2.2 S2 quattro Eng.ABY (169kW)	92-96				**CZ036**	Fte	Ø 22,20	
2.3 Eng.NG (100kW)	88-94				**PF222**	Luc	Ø 23,81	Alu, +ABS, LHD
	88-94				**PF215**	Luc	Ø 23,81	Alu, -ABS, LHD
	88-94				**CZ036**	Fte	Ø 22,20	
2.3 Eng.NG (98kW)	90-96				**PF222**	Luc	Ø 23,81	Alu, +ABS, LHD
	90-96				**PF215**	Luc	Ø 23,81	Alu, -ABS, LHD
	90-96				**CZ036**	Fte	Ø 22,20	
2.3 20v, quattro Eng.7A (123-125kW)	88-96				**CZ036**	Fte	Ø 22,20	
2.3 quattro Eng.NG (100kW)	88-94				**PF222**	Luc	Ø 23,81	Alu, +ABS, LHD
	88-94				**PF215**	Luc	Ø 23,81	Alu, -ABS, LHD
	88-94				**CZ036**	Fte	Ø 22,20	
2.3 quattro Eng.NG (98kW)	90-96				**PF222**	Luc	Ø 23,81	Alu, +ABS, LHD
	90-96				**PF215**	Luc	Ø 23,81	Alu, -ABS, LHD
	90-96				**CZ036**	Fte	Ø 22,20	
2.6 Eng.ABC (110kW)	8/92-12/96				**PF222**	Luc	Ø 23,81	Alu, +ABS, LHD
	92-96				**CZ036**	Fte	Ø 22,20	
2.6 quattro Eng.ABC (110kW)	8/92-12/96				**PF222**	Luc	Ø 23,81	Alu, +ABS, LHD
	92-96				**CZ036**	Fte	Ø 22,20	
2.8, quattro Eng.AAH (128kW)	9/91-12/96				**PF222**	Luc	Ø 23,81	Alu, +ABS, LHD
	9/91-12/96				**PF215**	Luc	Ø 23,81	Alu, -ABS, LHD
	91-96				**CZ036**	Fte	Ø 22,20	
Fox 1/75-1/79								
All models	77-79		R		**CF001**		Ø 14,29	M/T
	75-79		R		**CF000**		Ø 17,46	A/T
Q5 (8R) 11/08-								
2.0 TDi quattro Eng.CAGA/ CJCA (105kW)	09-				**CZ123**	Sachs	Ø 19,05	Alu
2.0 TDi quattro Eng.CAGB/ CJCB (100kW)	09-				**CZ123**	Sachs	Ø 19,05	Alu

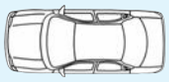		Spare Parts	F/R	L/R	FRITECH ref.		DIMENSIONS mm.	NOTE
2.0 TDi quattro Eng.CAHA/ CAHB/ CGLA/ CGLB/ CGLD/ CMGA (120-125kW)	08-				**CZ123**	Sachs	Ø 19,05	Alu
2.0 TDi quattro Eng.CGLC/ CMGB (130kW)	12-				**CZ123**	Sachs	Ø 19,05	Alu
2.0 TDi, quattro Eng.CJCD (110kW)	13-				**CZ123**	Sachs	Ø 19,05	Alu
2.0 TFSi hybrid quattro Eng.CHJA (155kW)	11-				**CZ123**	Sachs	Ø 19,05	Alu
2.0 TFSi quattro Eng.CAEB/ CDNC/ CPMA (155kW)	08-				**CZ123**	Sachs	Ø 19,05	Alu
2.0 TFSi quattro Eng.CDNB/ CNCB (132kW)	09-				**CZ123**	Sachs	Ø 19,05	Alu
2.0 TFSi quattro Eng.CNCD (165kW)	12-				**CZ123**	Sachs	Ø 19,05	Alu
2.0 TFSI quattro Eng.CPMB (162kW)	13-				**CZ123**	Sachs	Ø 19,05	Alu
2.0, quattro Eng.CDNA (130kW)	09-				**CZ123**	Sachs	Ø 19,05	Alu
3.0 TDi quattro Eng.CCWA (176kW)	08-				**CZ123**	Sachs	Ø 19,05	Alu
3.0 TDi quattro Eng.CCWB (155kW)	08-				**CZ123**	Sachs	Ø 19,05	Alu
3.0 TDi quattro Eng.CDUD (180kW)	12-				**CZ123**	Sachs	Ø 19,05	Alu
3.0 TFSi quattro Eng.CTUC/ CTVA (200kW)	12-				**CZ123**	Sachs	Ø 19,05	Alu
3.0 V6 TDi quattro Eng.CGQB (230kW)	12-				**CZ123**	Sachs	Ø 19,05	Alu
3.2 V6 TFSi quattro Eng.CALB (199kW)	09-				**CZ123**	Sachs	Ø 19,05	Alu
Quattro (85) 7/80-7/91								
2.2 20v Eng.RR (162kW)	89-91				**PF142**		Ø 23,81	Ch 85ZC901032-85ZH900550, Alu
	89-91				**CZ036**	Fte	Ø 22,20	
2.2 T. Eng.1B (147kW)	87-89				**PF142**		Ø 23,81	Ch 85ZC901032-85ZH900550, Alu
	87-89				**CZ036**	Fte	Ø 22,20	Ch 85J900109-
2.2 T. Eng.MB (147kW)	87-89				**PF142**		Ø 23,81	Ch 85ZC901032-85ZH900550, Alu
	87-89				**CZ036**	Fte	Ø 22,20	Ch 85J900109-
TT I (8N3,9), Roadster 10/98-8/06								
1.8 T, quattro Eng.AJQ/ APP/ ARY/ AUQ/ ATC/ AWP (132-134kW)	-8/02				**PF799**	Ate	Ø 23,81	Ch 8NZ2014301-, Alu, +ESP
	10/98-				**PF241**	Ate	Ø 23,81	Ch -8ZN2014300, Alu, +ESP, LHD
	9/02-06				**PF909**	Ate	Ø 23,80	Ch 8N2014301-, Alu
	10/98-				**PF818**	Bch	Ø 23,81	Ch -8ZN2014300, Alu, -ESP, RHD
	10/98-				**PF234**		Ø 23,81	Ch -8ZN2014300, -ESP, LHD
	-8/02				**CZ076**		Ø 19,05	
	98-				**PZ064**	Sachs	Ø 15,87	Pla
	98-				**PZ107**	Sachs	Ø 15,87	
1.8 T, quattro Eng.BVR (140kW)	05-				**PF241**	Ate	Ø 23,81	Alu, +ESP, LHD
	05-06				**PF909**	Ate	Ø 23,80	Ch 8N2014301-, Alu
	05-				**PZ064**	Sachs	Ø 15,87	Pla
	05-				**PZ107**	Sachs	Ø 15,87	
1.8 T. Eng.AUM (110kW)	-8/02				**PF799**	Ate	Ø 23,81	Ch 8NZ2014301-, Alu, +ESP
	01-				**PF241**	Ate	Ø 23,81	Ch -8ZN2014300, Alu, +ESP, LHD
	9/02-06				**PF909**	Ate	Ø 23,80	Ch 8N2014301-, Alu
	01-				**PF818**	Bch	Ø 23,81	Ch -8ZN2014300, Alu, -ESP, RHD
	01-				**PF234**		Ø 23,81	Ch -8ZN2014300, -ESP, LHD
	-8/02				**CZ076**		Ø 19,05	
	01-				**PZ064**	Sachs	Ø 15,87	Pla
	01-				**PZ107**	Sachs	Ø 15,87	
1.8 T. Eng.BVP (120kW)	05-06				**PF909**	Ate	Ø 23,80	Ch 8N2014301-, Alu
	05-				**PZ064**	Sachs	Ø 15,87	Pla
	05-				**PZ107**	Sachs	Ø 15,87	
1.8 T. quattro Eng.AMU/ APX/ BAM (165kW)	-8/02				**PF799**	Ate	Ø 23,81	Ch 8NZ2014301-, Alu, +ESP
	10/98-				**PF241**	Ate	Ø 23,81	Ch -8ZN2014300, Alu, +ESP, LHD
	9/02-06				**PF909**	Ate	Ø 23,80	Ch 8N2014301-, Alu
	10/98-				**PF818**	Bch	Ø 23,81	Ch -8ZN2014300, Alu, -ESP, RHD
	10/98-				**PF234**		Ø 23,81	Ch -8ZN2014300, -ESP, LHD
	98-				**PZ064**	Sachs	Ø 15,87	Pla
	98-				**PZ107**	Sachs	Ø 15,87	
1.8 T. quattro Eng.BFV (176kW)	05-06				**PF909**	Ate	Ø 23,80	Ch 8N2014301-, Alu
	05-				**PZ064**	Sachs	Ø 15,87	Pla
	05-				**PZ107**	Sachs	Ø 15,87	
3.2 VR6 quattro Eng.BHE (184kW)	-06				**PF799**	Ate	Ø 23,81	Ch 8NZ2014301-, Alu, +ESP
	03-				**PF241**	Ate	Ø 23,81	Ch -8ZN2014300, Alu, +ESP, LHD
	03-06				**PF909**	Ate	Ø 23,80	Ch 8N2014301-, Alu
	03-				**PF818**	Bch	Ø 23,81	Ch -8ZN2014300, Alu, -ESP, RHD
	03-				**PF234**		Ø 23,81	Ch -8ZN2014300, -ESP, LHD
	03-06				**PZ064**	Sachs	Ø 15,87	Pla
	03-06				**PZ107**	Sachs	Ø 15,87	

AUDI

		Spare Parts	F/R	L/R	FRITECH ref.		DIMENSIONS mm.	NOTE
TT II (8J3,9), Roadster 9/06-8/14								
1.8 TFSI Eng.CDAA (118kW)	08-				**CZ080**	Sachs	Ø 19,05	Alu, Cod. ID PR 0EJ
2.0 quattro Eng.CDLA/ CDMA (195kW)	08-				**CZ080**	Sachs	Ø 19,05	Alu, Cod. ID PR 0EJ
2.0 TDi quattro Eng.CBBB/ CFGB (125kW)	08-				**CZ080**	Sachs	Ø 19,05	Alu, Cod. ID PR 0EJ
2.0 TFSi Eng.BWA/ CCZA (147kW)	06-				**CZ080**	Sachs	Ø 19,05	Alu, Cod. ID PR 0EJ
2.0 TFSi Coupe Eng.CDLB (200kW)	08-				**CZ080**	Sachs	Ø 19,05	Alu, Cod. ID PR 0EJ
2.5 TFSi quattro Eng.CEPA (250kW)	09-				**CZ080**	Sachs	Ø 19,05	Alu, Cod. ID PR 0EJ
3.2 V6 quattro Eng.BUB (184kW)	06-				**CZ080**	Sachs	Ø 19,05	Alu, Cod. ID PR 0EJ
V8 (D1) 10/88-2/94								
3.6 quattro Eng.PT (180-184kW)	88-94				**CZ036**	Fte	Ø 22,20	
4.2 quattro Eng.ABH (206kW)	91-94				**CZ036**	Fte	Ø 22,20	

AUTOBIANCHI

A111 8/69-11/72								
1.4 Eng.FiatBLC.000 (51kW)	69-11/72				**PF044**		Ø 19,05	
A112 10/69-12/85								
0.9 Eng.A112B1.000/ 141A40R (34kW)	73-		R		**CF004**		Ø 19,05	
	73-				**PF050**		Ø 19,05	
	73-				**CT001**	Benditalia	Ø 25,40	Alu
0.9 Junior Eng.A112A5.000/ A112B2.000 (31kW)	-10/82		R		**CF002**		Ø 19,05	
	1/78-10/82				**PF050**		Ø 19,05	
	-12/77				**PF044**		Ø 19,05	
0.95 Eng.A112B1.000 (35kW)	78-		R		**CF004**		Ø 19,05	
	-78		R		**CF002**		Ø 19,05	
	1/78-				**PF050**		Ø 19,05	
	-12/77				**PF044**		Ø 19,05	
	77-				**CT001**	Benditalia	Ø 25,40	Alu
1.0 Abarth Eng.A112A2.000 (51kW)	11/82-84		R		**CF004**		Ø 19,05	
	77-10/82		R		**CF002**		Ø 19,05	
	77-84				**PF004**		Ø 19,05	
	11/82-				**CT001**	Benditalia	Ø 25,40	Alu
1.0 Abarth (58kW)	11/82-84		R		**CF004**		Ø 19,05	
	77-10/82		R		**CF002**		Ø 19,05	
	77-84				**PF004**		Ø 19,05	
	11/82-				**CT001**	Benditalia	Ø 25,40	Alu
Giardinetta								
120			F/R		**CF002**		Ø 19,05	
					PF010		Ø 19,05	
120 F			F/R		**CF002**		Ø 19,05	
					PF046		Ø 19,05	
Y10 3/85-10/95								
1.0 Eng.156A.000 (41kW)	85-92		R		**CF004**		Ø 19,05	
	85-92				**PF009**	Loc	Ø 20,64	
	85-92				**CT006**	Bdx/Ate	Ø 25,40	Alu
1.0 Eng.156A2.000 (33kW)	2/85-92		R		**CF004**		Ø 19,05	
	2/85-92				**PF009**	Loc	Ø 20,64	
	2/85-92				**CT006**	Bdx/Ate	Ø 25,40	Alu
1.0 4WD Eng.156A3.000 (37kW)	86-92		R		**CF004**		Ø 19,05	
	86-92				**PF009**	Loc	Ø 20,64	
	86-92				**CT006**	Bdx/Ate	Ø 25,40	Alu
1.0 Kat Eng.156A2.246 (33kW)	87-92		R		**CF004**		Ø 19,05	
	87-92				**PF009**	Loc	Ø 20,64	
	87-92				**CT006**	Bdx/Ate	Ø 25,40	Alu
1.0 T. Eng.156A1.000 (63kW)	85-92		R		**CF004**		Ø 19,05	
	85-92				**PF009**	Loc	Ø 20,64	
	85-92				**CT006**	Bdx/Ate	Ø 25,40	Alu
1.1 i.e. Kat Eng.156C.046 (42kW)	90-92		R		**CF004**		Ø 19,05	
	90-92				**PF009**	Loc	Ø 20,64	
	90-92				**CT006**	Bdx/Ate	Ø 25,40	Alu
1.1, 4WD Eng.156C.000 (42kW)	89-92		R		**CF004**		Ø 19,05	
	89-92				**PF009**	Loc	Ø 20,64	
	89-95				**CT006**	Bdx/Ate	Ø 25,40	Alu
1.3 i.e. GT Eng.146A5.046 (54kW)	89-92		R		**CF004**		Ø 19,05	
	89-92				**PF009**	Loc	Ø 20,64	

AUTOBIANCHI

		Spare Parts	F/R	L/R	FRITECH ref.		DIMENSIONS mm.	NOTE
1.3 i.e. GT Eng.146A5.046 (54kW)	89-92				**CT006**	Bdx/Ate	Ø 25,40	Alu
1.3 i.e. GT Eng.156B.000 (57kW)	89-92		R		**CF004**		Ø 19,05	
	89-92				**PF009**	Loc	Ø 20,64	
	89-92				**CT006**	Bdx/Ate	Ø 25,40	Alu
Y10 (RES. 1992) 6/92-10/95								
1.1, 4WD Eng.156C.000 (42kW)	92-95		R		**CF004**		Ø 19,05	
	92-95				**PF185**	Bdx	Ø 20,64	
1.3 i.e. GT Eng.146A5.046 (54kW)	92-95		R		**CF004**		Ø 19,05	
	92-95				**PF185**	Bdx	Ø 20,64	

BEDFORD

Brava								
2.2 D	88-90		R		**CF237**		Ø 25,40	
2.3	88-		R		**CF237**		Ø 25,40	
2.5 D	90-		R		**CF237**		Ø 25,40	
CF Van								
200 14 CWT	69-77		F	L	**CF334**	Loc	Ø 20,32	
	69-77		F	R	**CF336**	Loc	Ø 20,32	
	69-77		R	L	**CF427**		Ø 20,33	
	69-77		R	R	**CF425**		Ø 20,33	
220 18 CWT	70-77		F	L	**CF334**	Loc	Ø 20,32	
	70-77		F	R	**CF336**	Loc	Ø 20,32	
	77-84		F	R	**CF420**		Ø 22,20	
	70-84		R	L	**CF427**		Ø 20,33	
	70-84		R	R	**CF425**		Ø 20,33	
230	77-84		F	R	**CF420**		Ø 22,20	
	77-84		R	L	**CF427**		Ø 20,33	
	77-84		R	R	**CF425**		Ø 20,33	
250 22 CWT	70-77		F	L	**CF334**	Loc	Ø 20,32	Exc. 1.3 t
	77-84		F	L	**CF423**		Ø 23,81	13Q
	70-77		F	R	**CF336**	Loc	Ø 20,32	Exc. 1.3 t
	70-77		F	R	**CF420**		Ø 22,20	13Q
	77-84		F	R	**CF422**		Ø 23,81	13Q
	70-77		R	L	**CF427**		Ø 20,33	Exc. 1.3 t
	70-77		R	R	**CF425**		Ø 20,33	Exc. 1.3 t
	70-84		R		**CF424**		Ø 15,87	13Q
280 25 CWT	77-84		F	L	**CF423**		Ø 23,81	
	70-77		F	R	**CF420**		Ø 22,20	
	77-84		F	R	**CF422**		Ø 23,81	
	70-84		R		**CF424**		Ø 15,87	
340 35 CWT	70-84		F	R	**CF420**		Ø 22,20	
	70-84		R		**CF424**		Ø 15,87	
350	70-84		F	R	**CF420**		Ø 22,20	3,5 t
	70-84		R		**CF424**		Ø 15,87	3,5 t
CF2 Van								
All models	84-87		F	R	**CF420**		Ø 22,20	Only 350
	84-87		R	L	**CF526**		Ø 22,20	Exc. 350
	84-87		R	R	**CF527**		Ø 22,20	Exc. 350
	84-87		R		**CF424**		Ø 15,87	Only 350
Chevanne 1/76-12/82								
1.2 Eng.6/ 8/ 10 CWT (40-44kW)	76-82		R		**CF360**		Ø 19,05	
Commer/Dodge								
15 CWT	70-76		R		**CF424**		Ø 15,87	
22 CWT K 160	70-76		R		**CF424**		Ø 15,87	
Dennis								
FD4 Ambulance	70-75		R		**CF424**		Ø 15,87	
HA Van								
1050 6-CWT	-84		F	L	**CF192**		Ø 19,05	Ch 752613-
	67-		R		**CF261**		Ø 17,78	Ch -752612, Alu
	-84		R		**CF335**		Ø 19,05	Ch 752613-, Alu
1159 8-CWT	67-		R		**CF261**		Ø 17,78	Ch -752612, Alu
1256 10-CWT	-84		F	L	**CF192**		Ø 19,05	Ch 752613-
	-84		R		**CF335**		Ø 19,05	Ch 752613-, Alu

BEDFORD

		Spare Parts	F/R	L/R	FRITECH ref.		DIMENSIONS mm.	NOTE
Midi								
1.8 Eng.4ZB1 (63kW)	85-88		R	L	**CF287**		Ø 22,20	
	85-88		R	R	**CF455**		Ø 22,20	
2.0 D, TD Eng.4FC1 (42-51kW)	85-90		R	L	**CF287**		Ø 22,20	
	85-90		R	R	**CF455**		Ø 22,20	
2.0, 4WD Eng.4ZC1 (62kW)	88-94		R	L	**CF287**		Ø 22,20	
	88-94		R	R	**CF455**		Ø 22,20	
2.2 D, 4WD Eng.22DIE (45kW)	88-94		R	L	**CF287**		Ø 22,20	
	88-94		R	R	**CF455**		Ø 22,20	
2.4 TD	94-		R	L	**CF287**		Ø 22,20	
	94-		R	R	**CF455**		Ø 22,20	
Midi Van 1/87-12/92								
2.0 D Eng.4FC1 (43kW)	85-90		R	L	**CF287**		Ø 22,20	
	85-90		R	R	**CF455**		Ø 22,20	
2.2 D, 4WD Eng.4FD1 (45kW)	88-94		R	L	**CF287**		Ø 22,20	
	88-94		R	R	**CF455**		Ø 22,20	
Pick-Up								
1.6	81-88		R		**CF237**		Ø 25,40	
1.9 D	82-88		R		**CF237**		Ø 25,40	
Rascal 7/86-6/90								
1.0, Pick up Eng.FA10A (34kW)	86-90		R	L	**CF288**		Ø 15,87	Alu
	86-90		R	R	**CF289**		Ø 15,87	Alu

BMW

02 (E10) 9/67-7/77								
1502 1.6 Eng.M10B16 (55kW)	75-77		R		**CF483**		Ø 15,87	
1600 Ti Eng.M10B16 (77kW)	71-73		R		**CF483**		Ø 15,87	Ti
	67-69		R		**CF484**		Ø 17,46	GT
1600/2, Cabrio, Touring Eng.M10B16 (61-63kW)	66-75		R		**CF484**		Ø 17,46	
1802, Touring Eng.M10B18 (66kW)	71-75		R		**CF483**		Ø 15,87	
2000 Ti Eng.M10B20 (96kW)	69-73		R		**CF483**		Ø 15,87	Touring (Exc. Ti. Tii)
	69-75		R		**CF484**		Ø 17,46	Ti, Tii
	73-75		R		**CF713**		Ø 22,22	Sweden
2002 T. Eng.M10B20 (125kW)	73-75		R		**CF367**		Ø 22,22	
2002 Tii, Touring Eng.M10B20 (96kW)	71-75		R		**CF484**		Ø 17,46	
2002, Cabrio, Touring Eng.M10B20(40PDSi)	73-75		R		**CF483**		Ø 15,87	
(74kW)	73-75		R		**CF713**		Ø 22,22	Sweden
1 (E81,87) 9/04-9/12								
116d Eng.N47D20A (85kW)	09-				**PF802**	Ate	Ø 23,81/22,20	Alu
116i Eng.N43B16A / N45B16A (85kW)	04-3/07				**PF802**	Ate	Ø 23,81/22,20	Alu, 5p
	04-				**CZ118**	Fte	Ø 22,20	
	04-				**PZ080**	Fte	Ø 19,05	Pla
	04-				**PZ102**	Fte	Ø 19,05	
116i Eng.N43B16A / N45B16A (90kW)	07-				**PF802**	Ate	Ø 23,81/22,20	Alu
	07-				**CZ118**	Fte	Ø 22,20	
	07-				**PZ080**	Fte	Ø 19,05	Pla
	07-				**PZ102**	Fte	Ø 19,05	
118d Eng.M47N204D4 (90kW)	04-3/07				**PF802**	Ate	Ø 23,81/22,20	Alu, 5p
	04-				**CZ048**	Fte	Ø 22,20	
	04-				**PZ080**	Fte	Ø 19,05	Pla
	04-				**PZ102**	Fte	Ø 19,05	
118d Eng.N47D20A (100kW)	07-				**PF802**	Ate	Ø 23,81/22,20	Alu
118d Eng.N47D20A (105kW)	07-				**PF802**	Ate	Ø 23,81/22,20	Alu
	07-				**CZ118**	Fte	Ø 22,20	
118i Eng.N42B20B/ N46B20 (95kW)	04-3/07				**PF802**	Ate	Ø 23,81/22,20	Alu, 5p
	04-				**CZ048**	Fte	Ø 22,20	
	04-				**PZ080**	Fte	Ø 19,05	Pla
	04-				**PZ102**	Fte	Ø 19,05	
118i Eng.N43B20A (105kW)	07-				**PF802**	Ate	Ø 23,81/22,20	Alu
120d Eng.M47N204D4 (120kW)	04-3/07				**PF802**	Ate	Ø 23,81/22,20	Alu, 5p
	04-				**CZ048**	Fte	Ø 22,20	
	04-				**PZ080**	Fte	Ø 19,05	Pla
	04-				**PZ102**	Fte	Ø 19,05	

		Spare Parts	F/R	L/R	FRITECH ref.		DIMENSIONS mm.	NOTE
120d Eng.M47N204D4 (130kW)	07-				**CZ118**	Fte	Ø 22,20	
120i Eng.N42B20A (110kW)	04-3/07				**PF802**	Ate	Ø 23,81/22,20	Alu, 5p
	04-				**CZ048**	Fte	Ø 22,20	
	04-				**PZ080**	Fte	Ø 19,05	Pla
	04-				**PZ102**	Fte	Ø 19,05	
120i Eng.N42B20A (125kW)	07-				**PF802**	Ate	Ø 23,81/22,20	Alu
120i Eng.N46B20B (115kW)	07-				**PF802**	Ate	Ø 23,81/22,20	Alu
	07-				**CZ118**	Fte	Ø 22,20	
	07-				**PZ080**	Fte	Ø 19,05	Pla
	07-				**PZ102**	Fte	Ø 19,05	
123d Eng.N47D20B (150kW)	07-				**CZ118**	Fte	Ø 22,20	
130i Eng.N52B30/ N52B30A (195kW)	05-				**PF890**	Ate	Ø 25,40/22,20	Alu
	-10/06				**CZ048**	Fte	Ø 22,20	
	11/06-				**CZ118**	Fte	Ø 22,20	
	05-				**PZ080**	Fte	Ø 19,05	Pla
	05-				**PZ102**	Fte	Ø 19,05	
130i Eng.N52B30A (190kW)	05-				**PF890**	Ate	Ø 25,40/22,20	Alu
	3/05-7/05				**CZ048**	Fte	Ø 22,20	
1 (E82) Coupe 9/07-12/13								
118d Eng.N47D20A (105kW)	08-				**PF802**	Ate	Ø 23,81/22,20	Alu
	09-				**CZ118**	Fte	Ø 22,20	
118d Eng.N47D20C (100kW)	08-				**PF802**	Ate	Ø 23,81/22,20	Alu
120d Eng.M47N204D4 (130kW)	07-				**PF802**	Ate	Ø 23,81/22,20	Alu
	07-				**CZ118**	Fte	Ø 22,20	
	07-				**PZ080**	Fte	Ø 19,05	Pla
	07-				**PZ102**	Fte	Ø 19,05	
120d Eng.N47D20A (120kW)	07-				**PF802**	Ate	Ø 23,81/22,20	Alu
120i Eng.N43B20A (125kW)	09-				**PF802**	Ate	Ø 23,81/22,20	Alu
	09-				**CZ118**	Fte	Ø 22,20	
123d Eng.N47D20B (150kW)	07-5/08				**PF890**	Ate	Ø 25,40/22,20	Alu
	07-				**CZ118**	Fte	Ø 22,20	
	07-				**PZ080**	Fte	Ø 19,05	Pla
	07-				**PZ102**	Fte	Ø 19,05	
125i Eng.N53B30A (160kW)	08-				**CZ118**	Fte	Ø 22,20	
	08-				**PZ080**	Fte	Ø 19,05	Pla
	08-				**PZ102**	Fte	Ø 19,05	
135i Eng.N54B30A (225kW)	07-5/08				**PF890**	Ate	Ø 25,40/22,20	Alu
	07-				**CZ118**	Fte	Ø 22,20	
	07-				**PZ080**	Fte	Ø 19,05	Pla
	07-				**PZ102**	Fte	Ø 19,05	
M Eng.N54B30A (250kW)	11-				**CZ118**	Fte	Ø 22,20	
1 (E88) Cabrio 11/07-12/13								
118d Eng.N47D20A (100kW)	08-				**PF802**	Ate	Ø 23,81/22,20	Alu
118d Eng.N47D20A (105kW)	08-				**PF802**	Ate	Ø 23,81/22,20	Alu
	08-				**CZ118**	Fte	Ø 22,20	
118i Eng.N43B20A (105kW)	08-				**PF802**	Ate	Ø 23,81/22,20	Alu
120d Eng.N47D20A (120kW)	08-				**PF802**	Ate	Ø 23,81/22,20	Alu
120d Eng.N47D20A (130kW)	08-				**PF802**	Ate	Ø 23,81/22,20	Alu
	08-				**CZ118**	Fte	Ø 22,20	
120i Eng.N43B20A (125kW)	07-				**PF802**	Ate	Ø 23,81/22,20	Alu
	07-				**CZ118**	Fte	Ø 22,20	
123d Eng.N47D20B (150kW)	08-				**PF890**	Ate	Ø 25,40/22,20	Alu
	08-				**CZ118**	Fte	Ø 22,20	
125i Eng.N53B30A (160kW)	07-				**PF802**	Ate	Ø 23,81/22,20	Alu
	07-				**CZ118**	Fte	Ø 22,20	
135i Eng.N54B30A (225kW)	3/08-5/08				**PF890**	Ate	Ø 25,40/22,20	Alu
	08-				**CZ118**	Fte	Ø 22,20	
1 II (F20, F21) 8/11-								
114d Eng.B37D15A (70kW)	15-				**PZ080**	Fte	Ø 19,05	Pla
	15-				**PZ102**	Fte	Ø 19,05	
114d Eng.N47D16A (70kW)	12-				**PZ080**	Fte	Ø 19,05	Pla
	12-				**PZ102**	Fte	Ø 19,05	
114i Eng.N13B16A (75kW)	12-				**PZ080**	Fte	Ø 19,05	Pla
	12-				**PZ102**	Fte	Ø 19,05	

BMW

		Spare Parts	F/R	L/R	FRITECH ref.		DIMENSIONS mm.	NOTE
116d Eng.B37D15A (85kW)	15-				**PZ080**	Fte	Ø 19,05	Pla
	15-				**PZ102**	Fte	Ø 19,05	
116d Eng.N47D16A (85kW)	12-				**PZ080**	Fte	Ø 19,05	Pla
	12-				**PZ102**	Fte	Ø 19,05	
116d Eng.N47D20C (85kW)	11-				**PZ080**	Fte	Ø 19,05	Pla
	11-				**PZ102**	Fte	Ø 19,05	
116i Eng.B38B15A (80kW)	15-				**PZ080**	Fte	Ø 19,05	Pla
	15-				**PZ102**	Fte	Ø 19,05	
116i Eng.N13B16A (100kW)	11-				**PZ080**	Fte	Ø 19,05	Pla
	11-				**PZ102**	Fte	Ø 19,05	
118 i Eng.B38B15A (100kW)	15-				**PZ080**	Fte	Ø 19,05	Pla
	15-				**PZ102**	Fte	Ø 19,05	
118d, xD Eng.B47D20A (110kW)	11-				**PZ080**	Fte	Ø 19,05	Pla
	11-				**PZ102**	Fte	Ø 19,05	
118d, xD Eng.N47D20C (105kW)	11-				**PZ080**	Fte	Ø 19,05	Pla
	11-				**PZ102**	Fte	Ø 19,05	
118i Eng.N13B16A (125kW)	11-				**PZ080**	Fte	Ø 19,05	Pla
	11-				**PZ102**	Fte	Ø 19,05	
120d, xD Eng.B47D20A (140kW)	11-				**PZ080**	Fte	Ø 19,05	Pla
	11-				**PZ102**	Fte	Ø 19,05	
120d, xD Eng.N47D20C (135kW)	11-				**PZ080**	Fte	Ø 19,05	Pla
	11-				**PZ102**	Fte	Ø 19,05	
120i Eng.N13B16A (130kW)	15-				**PZ080**	Fte	Ø 19,05	Pla
	15-				**PZ102**	Fte	Ø 19,05	
125d Eng.N47D20D (160kW)	12-				**PZ080**	Fte	Ø 19,05	Pla
	12-				**PZ102**	Fte	Ø 19,05	
125i Eng.N20B20A (160kW)	12-				**PZ080**	Fte	Ø 19,05	Pla
	12-				**PZ102**	Fte	Ø 19,05	
M135i, xD Eng.N55B30A (235-240kW)	12-				**PZ080**	Fte	Ø 19,05	Pla
	12-				**PZ102**	Fte	Ø 19,05	
2 I (F22) Coupe 1/14-								
218d Eng.N47D20C (105kW)	14-				**PZ080**	Fte	Ø 19,05	Pla
	14-				**PZ102**	Fte	Ø 19,05	
220d Eng.N47D20C (135kW)	14-				**PZ080**	Fte	Ø 19,05	Pla
	14-				**PZ102**	Fte	Ø 19,05	
220d Eng.N47D20C (147kW)	14-				**PZ080**	Fte	Ø 19,05	Pla
	14-				**PZ102**	Fte	Ø 19,05	
220d, xD Eng.B47D20A (140kW)	14-				**PZ080**	Fte	Ø 19,05	Pla
	14-				**PZ102**	Fte	Ø 19,05	
220i Eng.N20B20B (135kW)	14-				**PZ080**	Fte	Ø 19,05	Pla
	14-				**PZ102**	Fte	Ø 19,05	
228i Eng.N20B20A (180kW)	14-				**PZ080**	Fte	Ø 19,05	Pla
	14-				**PZ102**	Fte	Ø 19,05	
M235i Eng.N55B30A (240kW)	14-				**PZ080**	Fte	Ø 19,05	Pla
	14-				**PZ102**	Fte	Ø 19,05	
2 I (F23) Cabrio 11/14-								
220d Eng.B47D20A (140kW)	14-				**PZ080**	Fte	Ø 19,05	Pla
	14-				**PZ102**	Fte	Ø 19,05	
220i Eng.N20B20B (135kW)	14-				**PZ080**	Fte	Ø 19,05	Pla
	14-				**PZ102**	Fte	Ø 19,05	
228i Eng.N20B20A (180kW)	14-				**PZ080**	Fte	Ø 19,05	Pla
	14-				**PZ102**	Fte	Ø 19,05	
M235i Eng.N55B30A (240kW)	14-				**PZ080**	Fte	Ø 19,05	Pla
	14-				**PZ102**	Fte	Ø 19,05	
2000 3.2 Coupe (E9) 10/65-3/76								
2800 CS Eng.M30B28 (125kW)	70-71		R		**CF367**		Ø 22,22	
3 I (E21) 6/75-3/84								
315 Eng.M10B16 (55kW)	4/81-7/84		R		**CF156**		Ø 19,05	
	81-12/83				**CZ013**		Ø 20,64	
	81-12/83				**PZ020**		Ø 19,05	
316 Eng.M10B16 (66kW)	75-80		R		**CF370**		Ø 19,05	Sweden
	9/75-80		R		**CF156**		Ø 19,05	Exc. Sweden
	6/75-80				**CZ013**		Ø 20,64	
	6/75-80				**PZ020**		Ø 19,05	

		Spare Parts	F/R	L/R	FRITECH ref.		DIMENSIONS mm.	NOTE
316 Eng.M10B18 (66kW)	80-82		R		**CF156**		Ø 19,05	Exc. Sweden
	80-82		R		**CF370**		Ø 19,05	Sweden
	80-82				**CZ013**		Ø 20,64	
	80-82				**PZ020**		Ø 19,05	
318 Eng.M10B18 (72kW)	75-80		R		**CF370**		Ø 19,05	Sweden
	9/75-80		R		**CF156**		Ø 19,05	Exc. Sweden
	6/75-80				**CZ013**		Ø 20,64	
	6/75-80				**PZ020**		Ø 19,05	
318 i Eng.M10B18(K-Jetronic) (77kW)	79-82		R		**CF156**		Ø 19,05	Exc. Sweden
	79-82		R		**CF370**		Ø 19,05	Sweden
	79-82				**CZ013**		Ø 20,64	
	79-82				**PZ020**		Ø 19,05	
320 Eng.M10B20 (80kW)	75-77		R		**CF370**		Ø 19,05	Sweden
	6/75-77				**CZ013**		Ø 20,64	
	6/75-77				**PZ020**		Ø 19,05	
320 i Eng.M10B20(K-Jetronic) (92kW)	9/77-8/82		R		**CF156**		Ø 19,05	
	6/75-82				**CZ013**		Ø 20,64	
	6/75-82				**PZ020**		Ø 19,05	
320/6 Eng.M20B20 (90kW)	77-82		R		**CF370**		Ø 19,05	Sweden
	77-82				**CZ013**		Ø 20,64	
	77-82				**PZ020**		Ø 19,05	
3 II (E30) 9/82-10/93								
315 Eng.M10B16(1B2) (55kW)	82-83		R		**CF156**		Ø 19,05	
316 Eng.M10B18(2B4) (66kW)	82-90		R		**CF041**		Ø 20,64	
	9/86-90		R		**CF106**		Ø 22,20	
	82-90				**PZ050**		Ø 19,05	Alu
316 i Eng.M40B16(Kat.) (73kW)	87-12/91		R		**CF106**		Ø 22,20	
	87-91				**CZ013**		Ø 20,64	
316 i, Cabrio Eng.M40B16 (75kW)	88-12/91		R		**CF106**		Ø 22,20	
	88-91				**CZ013**		Ø 20,64	
318 i Eng.M10B18(K-Jetronic) (77kW)	82-97		R		**CF041**		Ø 20,64	
	9/86-87		R		**CF106**		Ø 22,20	
	3/82-87				**CZ013**		Ø 20,64	
	82-87				**PZ050**		Ø 19,05	Alu
318 i Eng.M10B18(L-Jetronic) (75kW)	87-88		R		**CF041**		Ø 20,64	-ABS
	8/87-8/88		R		**CF106**		Ø 22,20	
	8/87-8/88				**CZ013**		Ø 20,64	
	8/87-8/88				**PZ050**		Ø 19,05	Alu
318 i Eng.M40B18 (85kW)	87-12/91		R		**CF106**		Ø 22,20	
	87-91				**CZ013**		Ø 20,64	
	87-6/91				**PZ050**		Ø 19,05	Alu
318 i, Cabrio Eng.M40B18(Kat.) (83kW)	87-93		R		**CF106**		Ø 22,20	
	87-93				**CZ013**		Ø 20,64	
	87-93				**PZ050**		Ø 19,05	Alu
318 is Eng.M42B18 (100kW)	89-12/91		R		**CF106**		Ø 22,20	
	89-91				**CZ013**		Ø 20,64	
	89-91				**PZ050**		Ø 19,05	Alu
320 i Eng.M20 (110kW)	85-90		R		**CF041**		Ø 20,64	-ABS
320 i Eng.M20B20(L-Jetronic) (92kW)	82-85		R		**CF041**		Ø 20,64	
	82-85				**CZ013**		Ø 20,64	
	82-85				**PZ050**		Ø 19,05	Alu
320 i Cabrio Eng.M20B20/ M20B20(Monotronic/ Kat) (95kW)	86-93		R		**CF041**		Ø 20,64	-ABS
320 i, Cabrio Eng.M20B20(L-Jetronic)/(Motronic/	85-93		R		**CF041**		Ø 20,64	
Kat.) (95kW)	85-93				**CZ013**		Ø 20,64	
	85-93				**PZ050**		Ø 19,05	Alu
323 i Eng.M20B23(L-Jetronic) (102kW)	82-83				**CZ013**		Ø 20,64	
	82-83				**PZ050**		Ø 19,05	Alu
323 i Eng.M20B23(L-Jetronic) (110kW)	83-86				**CZ013**		Ø 20,64	
	83-86				**PZ050**		Ø 19,05	Alu
324 D Eng.M21D24 (63kW)	9/85-12/91		R		**CF106**		Ø 22,20	
	85-6/91				**PZ050**		Ø 19,05	Alu
324 TD Eng.M21D24 (85kW)	2/87-91				**CZ013**		Ø 20,64	
	87-6/91				**PZ050**		Ø 19,05	Alu

BMW

		Spare Parts	F/R	L/R	FRITECH ref.		DIMENSIONS mm.	NOTE
325 e 2.7 Eng.M20B27 (90kW)	83-88				**CZ013**		Ø 20,64	
325 e 2.7 Eng.M20B27 (95kW)	1/85-87				**CZ013**		Ø 20,64	
325 i X Eng.M20B25(Kat.) (125kW)	86-91				**CZ013**		Ø 20,64	
	86-91				**PZ050**		Ø 19,05	Alu
325 i, Cabrio Eng.M20B25(Kat.) (125kW)	83-89				**CZ013**		Ø 20,64	
	83-89				**PZ050**		Ø 19,05	Alu
M3 2.3 Eng.S14B23 (147kW)	87-89				**CZ013**		Ø 20,64	
	87-89				**PZ050**		Ø 19,05	Alu
M3 2.3 Eng.S14B23(Kat) (158kW)	89-91				**CZ013**		Ø 20,64	
	89-91				**PZ050**		Ø 19,05	Alu
M3 2.3, Cabrio Eng.S14B23(Kat) (143kW)	86-91				**CZ013**		Ø 20,64	
	86-91				**PZ050**		Ø 19,05	Alu
3 II Touring (E30) 7/87-6/94								
316 i Eng.M40B16 (75kW)	91-94				**PF326**	Trw	Ø 25,40	Alu
316 i Eng.M40B16(Kat.) (73kW)	91-94				**PF326**	Trw	Ø 25,40	Alu
3 III (E36) 9/90-2/98								
316 i Eng.M40B16 (75kW)	90-93		R		**CF176**	Luc	Ø 23,81	
	90-93				**PF283**	Ate	Ø 23,81/20,64	Alu, +ABS, -ASC
	90-93				**PF220**	Luc	Ø 23,81	Alu, -ABS
	90-93				**PF326**	Trw	Ø 25,40	Alu
	90-93				**CZ027**	Fte	Ø 20,64	Alu
	90-93				**CZ095**	Fte	Ø 20,64	
	10/92-93				**PZ030**	Fte	Ø 19,05	Alu
	90-9/92				**PZ081**	Fte	Ø 19,05	Pla
	90-9/92				**PZ101**	Fte	Ø 19,05	Alu
316 i Eng.M40B16(Kat.) (73kW)	90-93		R		**CF176**	Luc	Ø 23,81	
	90-93				**PF283**	Ate	Ø 23,81/20,64	Alu, +ABS, -ASC
	90-93				**PF220**	Luc	Ø 23,81	Alu, -ABS
	90-93				**PF326**	Trw	Ø 25,40	Alu
	90-93				**CZ027**	Fte	Ø 20,64	Alu
	90-93				**CZ095**	Fte	Ø 20,64	
	10/92-93				**PZ030**	Fte	Ø 19,05	Alu
	90-9/92				**PZ081**	Fte	Ø 19,05	Pla
	90-9/92				**PZ101**	Fte	Ø 19,05	Alu
316 i Eng.M43B16 (75kW)	93-98		R		**CF176**	Luc	Ø 23,81	
	93-98				**PF283**	Ate	Ø 23,81/20,64	Alu, +ABS, -ASC
	93-98				**PF220**	Luc	Ø 23,81	Alu, -ABS
	93-98				**PF326**	Trw	Ø 25,40	Alu
	93-98				**CZ027**	Fte	Ø 20,64	Alu
	93-98				**CZ095**	Fte	Ø 20,64	
	10/92-98				**PZ030**	Fte	Ø 19,05	Alu
	5/97-98				**PZ087**	Fte	Ø 19,05	
	93-4/97				**PZ081**	Fte	Ø 19,05	Pla
	93-4/97				**PZ101**	Fte	Ø 19,05	Alu
318 i Eng.M40B18(Kat.) (83kW)	90-93		R		**CF176**	Luc	Ø 23,81	Exc. Japan/Australia
	90-93				**PF283**	Ate	Ø 23,81/20,64	Alu, +ABS, -ASC
	90-93				**PF220**	Luc	Ø 23,81	Alu, Exc. Japan/Australia, -ABS
	90-93				**PF326**	Trw	Ø 25,40	Alu
	90-93				**CZ027**	Fte	Ø 20,64	Alu
	90-93				**CZ095**	Fte	Ø 20,64	
	10/92-93				**PZ030**	Fte	Ø 19,05	Alu
	90-9/92				**PZ081**	Fte	Ø 19,05	Pla
	91-9/92				**PZ101**	Fte	Ø 19,05	Alu
318 i Eng.M43B18 (85kW)	93-98		R		**CF176**	Luc	Ø 23,81	
	93-98				**PF283**	Ate	Ø 23,81/20,64	Alu, +ABS, -ASC
	93-98				**PF220**	Luc	Ø 23,81	Alu, Exc. Japan/Australia, -ABS
	93-98				**PF326**	Trw	Ø 25,40	Alu
	93-98				**CZ027**	Fte	Ø 20,64	Alu
	93-98				**CZ095**	Fte	Ø 20,64	
	5/97-98				**PZ087**	Fte	Ø 19,05	
	93-4/97				**PZ081**	Fte	Ø 19,05	Pla
	93-4/97				**PZ101**	Fte	Ø 19,05	Alu
318 is Eng.M42B18 (103kW)	93-97				**PF283**	Ate	Ø 23,81/20,64	Alu, +ABS, -ASC
	93-97				**PF326**	Trw	Ø 25,40	Alu

		Spare Parts	F/R	L/R	FRITECH ref.		DIMENSIONS mm.	NOTE
318 is Eng.M42B18 (103kW)	93-97				**CZ027**	Fte	Ø 20,64	Alu
	93-97				**CZ095**	Fte	Ø 20,64	
	5/97-				**PZ087**	Fte	Ø 19,05	
	93-4/97				**PZ081**	Fte	Ø 19,05	Pla
	93-4/97				**PZ101**	Fte	Ø 19,05	Alu
318 is Eng.M44B19 (103kW)	95-98				**PF283**	Ate	Ø 23,81/20,64	Alu, +ABS, -ASC
	95-98				**PF326**	Trw	Ø 25,40	Alu
	5/97-98				**PZ087**	Fte	Ø 19,05	
318 TDS Eng.M41D18(Inter.) (66kW)	95-98		R		**CF176**	Luc	Ø 23,81	Exc. Authority cars
	95-98				**PF283**	Ate	Ø 23,81/20,64	Alu, +ABS, -ASC
	95-98				**PF326**	Trw	Ø 25,40	Alu
	95-98				**CZ027**	Fte	Ø 20,64	Alu
	95-98				**CZ095**	Fte	Ø 20,64	
	5/97-98				**PZ087**	Fte	Ø 19,05	
	95-4/97				**PZ081**	Fte	Ø 19,05	Pla
	95-4/97				**PZ101**	Fte	Ø 19,05	Alu
320 i Eng.M50B(206S1)/ M52B(206S3)Vanos	90-98				**PF283**	Ate	Ø 23,81/20,64	Alu, +ABS, -ASC
(110kW)	90-98				**PF220**	Luc	Ø 23,81	Alu, -ABS
	90-98				**PF326**	Trw	Ø 25,40	Alu
	90-98				**CZ027**	Fte	Ø 20,64	Alu
	90-98				**CZ095**	Fte	Ø 20,64	
	10/92-98				**PZ030**	Fte	Ø 19,05	Alu
	5/97-98				**PZ087**	Fte	Ø 19,05	
	90-9/92				**PZ081**	Fte	Ø 19,05	Pla
	90-9/92				**PZ101**	Fte	Ø 19,05	Alu
323 i 2.5 Eng.M52B25(Vanos) (125kW)	95-98				**PF283**	Ate	Ø 23,81/20,64	Alu, +ABS, -ASC
	95-98				**CZ027**	Fte	Ø 20,64	Alu
	95-98				**CZ095**	Fte	Ø 20,64	
	5/97-98				**PZ087**	Fte	Ø 19,05	
	95-4/97				**PZ081**	Fte	Ø 19,05	Pla
	95-4/97				**PZ101**	Fte	Ø 19,05	Alu
325 i Eng.M50B25(Vanos) (141kW)	90-95				**PF283**	Ate	Ø 23,81/20,64	Alu, +ABS, -ASC
	90-95				**PF220**	Luc	Ø 23,81	Alu, -ABS
	90-95				**PF326**	Trw	Ø 25,40	Alu
	90-95				**CZ027**	Fte	Ø 20,64	Alu
	90-95				**CZ095**	Fte	Ø 20,64	
	10/92-95				**PZ030**	Fte	Ø 19,05	Alu
	90-9/92				**PZ081**	Fte	Ø 19,05	Pla
	90-9/92				**PZ101**	Fte	Ø 19,05	Alu
325 TD Eng.M51D25 (85kW)	91-98				**PF283**	Ate	Ø 23,81/20,64	Alu, +ABS, -ASC
	91-98				**PF220**	Luc	Ø 23,81	Alu, -ABS
	91-98				**PF326**	Trw	Ø 25,40	Alu
	91-98				**CZ027**	Fte	Ø 20,64	Alu
	91-98				**CZ095**	Fte	Ø 20,64	
	10/92-98				**PZ030**	Fte	Ø 19,05	Alu
	5/97-98				**PZ087**	Fte	Ø 19,05	
	91-9/92				**PZ081**	Fte	Ø 19,05	Pla
	91-9/92				**PZ101**	Fte	Ø 19,05	Alu
325 TDS Eng.M51D25(Inter.) (105kW)	93-9/98				**PF283**	Ate	Ø 23,81/20,64	Alu, +ABS, -ASC
	93-98				**PF326**	Trw	Ø 25,40	Alu
	5/93-9/98				**CZ027**	Fte	Ø 20,64	Alu
	5/93-9/98				**CZ095**	Fte	Ø 20,64	
	5/97-98				**PZ087**	Fte	Ø 19,05	
	93-4/97				**PZ081**	Fte	Ø 19,05	Pla
	93-4/97				**PZ101**	Fte	Ø 19,05	Alu
328 i Eng.M52B28 (142kW)	95-98				**PF283**	Ate	Ø 23,81/20,64	Alu, +ABS, -ASC
	95-98				**CZ027**	Fte	Ø 20,64	Alu
	95-98				**CZ095**	Fte	Ø 20,64	
	5/97-98				**PZ087**	Fte	Ø 19,05	
	95-4/97				**PZ081**	Fte	Ø 19,05	Pla
	95-4/97				**PZ101**	Fte	Ø 19,05	Alu
M3 3.0 Eng.S50B30 (210kW)	8/94-95				**CZ048**	Fte	Ø 22,20	
	10/94-9/95				**PZ101**	Fte	Ø 19,05	Alu
	94-4/97				**PZ081**	Fte	Ø 19,05	Pla

BMW

		Spare Parts	F/R	L/R	FRITECH ref.		DIMENSIONS mm.	NOTE
M3 3.2 Eng.S50B32 (236kW)	95-98				**PF327**	Trw	Ø 25,40	Alu
	95-98				**CZ048**	Fte	Ø 22,20	
	5/97-98				**PZ087**	Fte	Ø 19,05	
3 III Cabrio, Coupe (E36) 3/92-4/99								
316 i (Exc. Cabrio) Eng.M43B16 (75kW)	93-99		R		**CF176**	Luc	Ø 23,81	
	93-99				**PF283**	Ate	Ø 23,81/20,64	Alu, +ABS, -ASC
	93-99				**PF220**	Luc	Ø 23,81	Alu, -ABS
	93-99				**PF326**	Trw	Ø 25,40	Alu
	93-99				**CZ027**	Fte	Ø 20,64	Alu
	93-99				**CZ095**	Fte	Ø 20,64	
	-10/94				**PZ030**	Fte	Ø 19,05	Alu
	11/94-				**PZ101**	Fte	Ø 19,05	Alu
	5/97-99				**PZ087**	Fte	Ø 19,05	
	93-99				**PZ081**	Fte	Ø 19,05	Pla
318 i (Exc. Coupe) Eng.M43B18 (85kW)	94-99		R		**CF176**	Luc	Ø 23,81	
	9/94-9/99				**PF283**	Ate	Ø 23,81/20,64	Alu, +ABS, -ASC
	94-99				**PF326**	Trw	Ø 25,40	Alu
	5/97-99				**PZ087**	Fte	Ø 19,05	
318 is (Exc. Cabrio) Eng.M42B18 (103kW)	92-95				**PF283**	Ate	Ø 23,81/20,64	Alu, +ABS, -ASC
	92-95				**PF326**	Trw	Ø 25,40	Alu
	92-95				**PZ030**	Fte	Ø 19,05	Alu
319 is (Exc. Cabrio) Eng.M44B19 (103kW)	95-99				**PF283**	Ate	Ø 23,81/20,64	Alu, +ABS, -ASC
	95-99				**PF326**	Trw	Ø 25,40	Alu
	5/97-99				**PZ087**	Fte	Ø 19,05	
320 i Eng.M50B(206S1)/ M52B(206S3)Vanos	92-99				**PF283**	Ate	Ø 23,81/20,64	Alu, +ABS, -ASC
(110kW)	92-99				**PF220**	Luc	Ø 23,81	Alu, -ABS
	92-99				**PF326**	Trw	Ø 25,40	Alu
	92-99				**CZ027**	Fte	Ø 20,64	Alu
	92-99				**CZ095**	Fte	Ø 20,64	
	10/92-				**PZ030**	Fte	Ø 19,05	Alu, Coupè
	5/97-99				**PZ087**	Fte	Ø 19,05	
	92-9/92				**PZ081**	Fte	Ø 19,05	Pla
	92-9/92				**PZ101**	Fte	Ø 19,05	Alu
323 i 2.5 Eng.M52B25(Vanos) (125kW)	3/95-9/99				**PF283**	Ate	Ø 23,81/20,64	Alu, +ABS, -ASC
	3/95-9/99				**CZ027**	Fte	Ø 20,64	Alu
	3/95-9/99				**CZ095**	Fte	Ø 20,64	
	3/95-4/97				**PZ081**	Fte	Ø 19,05	Pla
	3/95-4/97				**PZ101**	Fte	Ø 19,05	Alu
	5/97-99				**PZ087**	Fte	Ø 19,05	
325 i Eng.M52B25(Vanos) (141kW)	92-99				**PF283**	Ate	Ø 23,81/20,64	Alu, +ABS, -ASC
	92-99				**PF220**	Luc	Ø 23,81	Alu, -ABS
	92-99				**PF326**	Trw	Ø 25,40	Alu
	92-99				**CZ027**	Fte	Ø 20,64	Alu
	92-99				**CZ095**	Fte	Ø 20,64	
	10/92-99				**PZ030**	Fte	Ø 19,05	Alu
	5/97-99				**PZ087**	Fte	Ø 19,05	
	92-9/92				**PZ081**	Fte	Ø 19,05	Pla
	92-9/92				**PZ101**	Fte	Ø 19,05	Alu
328 i cabrio Eng.M52B28/ M52B28TU (142kW)	1/95-9/99				**PF283**	Ate	Ø 23,81/20,64	Alu, +ABS, -ASC
	1/95-9/99				**CZ027**	Fte	Ø 20,64	Alu
	1/95-9/99				**CZ095**	Fte	Ø 20,64	
	1/95-4/97				**PZ081**	Fte	Ø 19,05	Pla
	1/95-4/97				**PZ101**	Fte	Ø 19,05	Alu
	5/97-99				**PZ087**	Fte	Ø 19,05	
328 i coupe Eng.M52B28 (142kW)	1/95-9/99				**PF283**	Ate	Ø 23,81/20,64	Alu, +ABS, -ASC
	1/95-9/99				**CZ027**	Fte	Ø 20,64	Alu
	1/95-9/99				**CZ095**	Fte	Ø 20,64	
	1/95-4/97				**PZ081**	Fte	Ø 19,05	Pla
	1/95-4/97				**PZ101**	Fte	Ø 19,05	Alu
	5/97-99				**PZ087**	Fte	Ø 19,05	
M3 3.0 Eng.S50B30 (210kW)	92-95				**CZ048**	Fte	Ø 22,20	
M3 3.0 (Exc. Cabrio) Eng.S50B30 (217kW)	1/95-10/95				**CZ048**	Fte	Ø 22,20	
M3 3.2 Eng.S50B32 (236kW)	95-99				**PF327**	Trw	Ø 25,40	Alu
	10/95-4/99				**CZ048**	Fte	Ø 22,20	

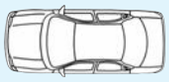		Spare Parts	F/R	L/R	FRITECH ref.		DIMENSIONS mm.	NOTE
M3 3.2 Eng.S50B32 (236kW)	5/97-99				**PZ087**	Fte	Ø 19,05	
3 III Compact (E36) 3/94-8/00								
316 g Eng.CNGB16K (75kW)	95-8/00				**PF283**	Ate	Ø 23,81/20,64	Alu, +ABS, -ASC
	5/97-00				**PZ087**	Fte	Ø 19,05	
316 i Eng.M43164E3 (77kW)	98-8/00				**PF283**	Ate	Ø 23,81/20,64	Alu, +ABS, -ASC
	98-00				**CZ048**	Fte	Ø 22,20	
	98-00				**PZ087**	Fte	Ø 19,05	
316 i Eng.M43B16 (75kW)	3/94-		R		**CF245**	Luc	Ø 22,20	Exc. Japan/Australia
	9/94-8/00				**PF283**	Ate	Ø 23,81/20,64	Alu, +ABS, -ASC
	94-98				**PF220**	Luc	Ø 23,81	Alu, -ABS
	94-8/00				**CZ027**	Fte	Ø 20,64	Alu
	94-8/00				**CZ095**	Fte	Ø 20,64	
	5/97-00				**PZ087**	Fte	Ø 19,05	
	94-8/00				**PZ081**	Fte	Ø 19,05	Pla
	94-8/00				**PZ101**	Fte	Ø 19,05	Alu
318 TDS Eng.M41D18(Inter.) (66kW)	95-00		R		**CF245**	Luc	Ø 22,20	Exc. Authority cars
	1/95-8/00				**PF283**	Ate	Ø 23,81/20,64	Alu, +ABS, -ASC
	1/95-8/00				**CZ027**	Fte	Ø 20,64	Alu
	1/95-8/00				**CZ095**	Fte	Ø 20,64	
	1/95-8/00				**PZ081**	Fte	Ø 19,05	Pla
	1/95-8/00				**PZ101**	Fte	Ø 19,05	Alu
	5/97-00				**PZ087**	Fte	Ø 19,05	
318 ti Eng.M42B18 (103kW)	94-95				**PF283**	Ate	Ø 23,81/20,64	Alu, +ABS, -ASC
318 ti Eng.M44B19 (103kW)	95-8/00				**PF283**	Ate	Ø 23,81/20,64	Alu, +ABS, -ASC
	5/97-00				**PZ087**	Fte	Ø 19,05	
323 ti Eng.M52B25(Vanos) (125kW)	97-00				**PF283**	Ate	Ø 23,81/20,64	Alu, +ABS, -ASC
	97-1/99				**CZ027**	Fte	Ø 20,64	Alu
	97-1/99				**CZ095**	Fte	Ø 20,64	
	2/99-00				**CZ048**	Fte	Ø 22,20	
	5/97-00				**PZ087**	Fte	Ø 19,05	
	97-00				**PZ081**	Fte	Ø 19,05	Pla
	97-00				**PZ101**	Fte	Ø 19,05	Alu
3 III Touring (E36) 1/95-10/99								
316 i Eng.M43B16 (75kW)	96-99		R		**CF176**	Luc	Ø 23,81	
	96-99				**PF283**	Ate	Ø 23,81/20,64	Alu, +ABS, -ASC
	96-99				**PF220**	Luc	Ø 23,81	Alu, -ABS
	96-99				**PF326**	Trw	Ø 25,40	Alu
	96-99				**CZ027**	Fte	Ø 20,64	Alu
	96-99				**CZ095**	Fte	Ø 20,64	
	5/97-99				**PZ087**	Fte	Ø 19,05	
	96-99				**PZ081**	Fte	Ø 19,05	Pla
	96-99				**PZ101**	Fte	Ø 19,05	Alu
318 i Eng.M43B18 (85kW)	95-99		R		**CF176**	Luc	Ø 23,81	Exc. Japan/Australia
	95-99				**PF283**	Ate	Ø 23,81/20,64	Alu, +ABS, -ASC
	95-99				**PF220**	Luc	Ø 23,81	Alu, Exc. Japan/Australia, -ABS
	95-99				**PF326**	Trw	Ø 25,40	Alu
	95-99				**CZ027**	Fte	Ø 20,64	Alu
	95-99				**CZ095**	Fte	Ø 20,64	
	5/97-99				**PZ087**	Fte	Ø 19,05	
	95-99				**PZ081**	Fte	Ø 19,05	Pla
	95-99				**PZ101**	Fte	Ø 19,05	Alu
318 TDS Eng.M41D18(Inter.) (66kW)	95-		R		**CF176**	Luc	Ø 23,81	Exc. Authority cars
	95-99				**PF283**	Ate	Ø 23,81/20,64	Alu, +ABS, -ASC
	95-99				**PF326**	Trw	Ø 25,40	Alu
	95-99				**CZ027**	Fte	Ø 20,64	Alu
	95-99				**CZ095**	Fte	Ø 20,64	
	5/97-99				**PZ087**	Fte	Ø 19,05	
	95-99				**PZ081**	Fte	Ø 19,05	Pla
	95-99				**PZ101**	Fte	Ø 19,05	Alu
320 i Eng.M52B(206S3)Vanos (110kW)	95-99				**PF283**	Ate	Ø 23,81/20,64	Alu, +ABS, -ASC
	95-99				**PF220**	Luc	Ø 23,81	Alu, -ABS
	95-99				**PF326**	Trw	Ø 25,40	Alu
	95-99				**CZ027**	Fte	Ø 20,64	Alu
	95-99				**CZ095**	Fte	Ø 20,64	

BMW

		Spare Parts	F/R	L/R	FRITECH ref.		DIMENSIONS mm.	NOTE
320 i Eng.M52B(206S3)Vanos (110kW)	5/97-99				**PZ087**	Fte	Ø 19,05	
	95-99				**PZ081**	Fte	Ø 19,05	Pla
	95-99				**PZ101**	Fte	Ø 19,05	Alu
323 i 2.5 Eng.M52B25(Vanos) (125kW)	3/95-9/99				**PF283**	Ate	Ø 23,81/20,64	Alu, +ABS, -ASC
	3/95-9/99				**CZ027**	Fte	Ø 20,64	Alu
	3/95-9/99				**CZ095**	Fte	Ø 20,64	
	3/95-9/99				**PZ081**	Fte	Ø 19,05	Pla
	3/95-9/99				**PZ101**	Fte	Ø 19,05	Alu
	5/97-99				**PZ087**	Fte	Ø 19,05	
325 TDS Eng.M51D25(Inter.) (105kW)	95-99				**PF283**	Ate	Ø 23,81/20,64	Alu, +ABS, -ASC
	95-99				**PF326**	Trw	Ø 25,40	Alu
	95-99				**CZ027**	Fte	Ø 20,64	Alu
	95-99				**CZ095**	Fte	Ø 20,64	
	5/97-99				**PZ087**	Fte	Ø 19,05	
	95-99				**PZ081**	Fte	Ø 19,05	Pla
	95-99				**PZ101**	Fte	Ø 19,05	Alu
328 i Eng.M52B28 (142kW)	1/95-9/99				**PF283**	Ate	Ø 23,81/20,64	Alu, +ABS, -ASC
	1/95-9/99				**CZ027**	Fte	Ø 20,64	Alu
	1/95-9/99				**CZ095**	Fte	Ø 20,64	
	1/95-9/99				**PZ081**	Fte	Ø 19,05	Pla
	1/95-9/99				**PZ101**	Fte	Ø 19,05	Alu
	5/97-99				**PZ087**	Fte	Ø 19,05	
3 IV (E46) 2/98-12/04								
316 i Eng.M43164E3 (77kW)	98-8/00				**PF804**	Ate	Ø 22,20/20,64	Alu, +DSC
	98-8/01				**PF284**	Ate	Ø 22,20/20,64	Alu, -DSC
	9/01-				**PF614**	Ate	Ø 23,81/22,00	-DSC
	9/00-				**PF628**	Ate	Ø 23,81/22,20	Alu, +DSC
	98-				**CZ073**	Fte	Ø 22,20	Alu
	98-				**PZ080**	Fte	Ø 19,05	Pla
	98-				**PZ102**	Fte	Ø 19,05	
316 i Eng.M43B16(164E3) (77kW)	00-8/00				**PF804**	Ate	Ø 22,20/20,64	Alu, +DSC
	00-8/01				**PF284**	Ate	Ø 22,20/20,64	Alu, -DSC
	9/01-				**PF614**	Ate	Ø 23,81/22,00	-DSC
	9/00-				**PF628**	Ate	Ø 23,81/22,20	Alu, +DSC
	00-				**CZ073**	Fte	Ø 22,20	Alu
	00-				**PZ080**	Fte	Ø 19,05	Pla
	00-				**PZ102**	Fte	Ø 19,05	
316 i Eng.N42B18 (85kW)	02-				**PF628**	Ate	Ø 23,81/22,20	Alu, +DSC
	02-				**CZ073**	Fte	Ø 22,20	Alu
	02-				**PZ080**	Fte	Ø 19,05	Pla
	02-				**PZ102**	Fte	Ø 19,05	
318 D Eng.M47N204D1 (85kW)	01-				**PF628**	Ate	Ø 23,81/22,20	Alu, +DSC
	01-				**CZ073**	Fte	Ø 22,20	Alu
	3/01-				**PZ080**	Fte	Ø 19,05	Pla
	3/01-				**PZ102**	Fte	Ø 19,05	
318 D Eng.M47N204D4 (85kW)	03-				**PF628**	Ate	Ø 23,81/22,20	Alu, +DSC
	03-				**CZ073**	Fte	Ø 22,20	Alu
	03-				**PZ080**	Fte	Ø 19,05	Pla
	03-				**PZ102**	Fte	Ø 19,05	
318 i Eng.M43B19 (87kW)	98-8/00				**PF804**	Ate	Ø 22,20/20,64	Alu, +DSC
	98-8/01				**PF284**	Ate	Ø 22,20/20,64	Alu, -DSC
	9/01-				**PF614**	Ate	Ø 23,81/22,00	-DSC
	9/00-				**PF628**	Ate	Ø 23,81/22,20	Alu, +DSC
	98-				**CZ073**	Fte	Ø 22,20	Alu
	98-				**PZ080**	Fte	Ø 19,05	Pla
	98-				**PZ102**	Fte	Ø 19,05	
318 i Eng.N42B20/ N46B20 (105kW)	01-				**PF628**	Ate	Ø 23,81/22,20	Alu, +DSC
	01-				**CZ073**	Fte	Ø 22,20	Alu
	3/01-				**PZ080**	Fte	Ø 19,05	Pla
	3/01-				**PZ102**	Fte	Ø 19,05	
320 D Eng.M47D204D1 (100kW)	98-8/00				**PF804**	Ate	Ø 22,20/20,64	Alu, +DSC
	98-8/01				**PF284**	Ate	Ø 22,20/20,64	Alu, -DSC
	9/01-				**PF614**	Ate	Ø 23,81/22,00	-DSC
	9/00-				**PF628**	Ate	Ø 23,81/22,20	Alu, +DSC

		Spare Parts	F/R	L/R	FRITECH ref.		DIMENSIONS mm.	NOTE
320 D Eng.M47D204D1 (100kW)	98-				**CZ073**	Fte	Ø 22,20	Alu
	98-				**PZ080**	Fte	Ø 19,05	Pla
	98-				**PZ102**	Fte	Ø 19,05	
320 D Eng.M47N204D4 (110kW)	9/01-				**PF628**	Ate	Ø 23,81/22,20	Alu, +DSC
	01-				**CZ073**	Fte	Ø 22,20	Alu
	3/01-				**PZ080**	Fte	Ø 19,05	Pla
	3/01-				**PZ102**	Fte	Ø 19,05	
320 i Eng.M52B(206S3)Vanos (110kW)	98-00				**PF284**	Ate	Ø 22,20/20,64	Alu, -DSC
	98-				**CZ073**	Fte	Ø 22,20	Alu
	98-				**PZ080**	Fte	Ø 19,05	Pla
	98-				**PZ102**	Fte	Ø 19,05	
320 i Eng.M54226S1 (125kW)	00-8/01				**PF284**	Ate	Ø 22,20/20,64	Alu, -DSC
	9/01-				**PF614**	Ate	Ø 23,81/22,00	-DSC
	00-				**CZ073**	Fte	Ø 22,20	Alu
	3/01-				**PZ080**	Fte	Ø 19,05	Pla
	3/01-				**PZ102**	Fte	Ø 19,05	
323 i Eng.M52B25(Vanos) (125kW)	98-				**PF804**	Ate	Ø 22,20/20,64	Alu, +DSC
	98-00				**PF284**	Ate	Ø 22,20/20,64	Alu, -DSC
	98-				**CZ073**	Fte	Ø 22,20	Alu
	98-				**PZ080**	Fte	Ø 19,05	Pla
	98-				**PZ102**	Fte	Ø 19,05	
325 i, xi Eng.M54256S5 (141kW)	00-8/01				**PF284**	Ate	Ø 22,20/20,64	Alu, -DSC
	9/01-				**PF614**	Ate	Ø 23,81/22,00	-DSC
	00-				**CZ073**	Fte	Ø 22,20	Alu
	00-				**PZ080**	Fte	Ø 19,05	Pla
	00-				**PZ102**	Fte	Ø 19,05	
328 i Eng.M52B28 (142kW)	98-6/00				**PF284**	Ate	Ø 22,20/20,64	Alu, -DSC
	98-8/00				**PF804**	Ate	Ø 22,20/20,64	Alu, +DSC
	98-				**CZ073**	Fte	Ø 22,20	Alu
	98-				**PZ080**	Fte	Ø 19,05	Pla
	98-				**PZ102**	Fte	Ø 19,05	
330 D, xd Eng.M57D30 (135kW)	99-8/01				**PF284**	Ate	Ø 22,20/20,64	Alu, -DSC
	9/01-				**PF614**	Ate	Ø 23,81/22,00	-DSC
	99-04				**PF615**	Ate	Ø 23,81/22,00	-DSC
	99-				**CZ073**	Fte	Ø 22,20	Alu
	99-				**PZ080**	Fte	Ø 19,05	Pla
	99-				**PZ102**	Fte	Ø 19,05	
330 D, xd Eng.M57N306D2 (150kW)	03-04				**PF615**	Ate	Ø 23,81/22,00	-DSC
	03-				**CZ073**	Fte	Ø 22,20	Alu
	03-				**PZ080**	Fte	Ø 19,05	Pla
	03-				**PZ102**	Fte	Ø 19,05	
330 i, xi Eng.M54306S3 (170kW)	00-8/01				**PF284**	Ate	Ø 22,20/20,64	Alu, -DSC
	9/00-				**PF615**	Ate	Ø 23,81/22,00	-DSC
	9/01-				**PF614**	Ate	Ø 23,81/22,00	-DSC
	00-				**CZ073**	Fte	Ø 22,20	Alu
	00-				**PZ080**	Fte	Ø 19,05	Pla
	00-				**PZ102**	Fte	Ø 19,05	
3 IV Cabrio, Coupe (E46) 4/99-2/07								
3.2 M3 Eng.S54326S4/ S54B32 (252kW)	00-				**CZ073**	Fte	Ø 22,20	Alu, M/T
	00-				**PZ080**	Fte	Ø 19,05	Pla
	00-				**PZ102**	Fte	Ø 19,05	
316 Ci (Exc. Cabrio) Eng.M43B16(164E3) (77kW)	00-8/00				**PF804**	Ate	Ø 22,20/20,64	Alu, +DSC
	00-8/01				**PF284**	Ate	Ø 22,20/20,64	Alu, -DSC
	9/01-				**PF614**	Ate	Ø 23,81/22,00	-DSC
	9/00-				**PF628**	Ate	Ø 23,81/22,20	Alu, +DSC
	00-				**CZ073**	Fte	Ø 22,20	Alu
	00-				**PZ080**	Fte	Ø 19,05	Pla
	00-				**PZ102**	Fte	Ø 19,05	
318 Ci Eng.N42B20/ N46B20 (105kW)	01-				**PF628**	Ate	Ø 23,81/22,20	Alu, +DSC
	01-				**CZ073**	Fte	Ø 22,20	Alu
	3/01-				**PZ080**	Fte	Ø 19,05	Pla
	3/01-				**PZ102**	Fte	Ø 19,05	
318 Ci (Exc. Cabrio) Eng.M43B19 (87kW)	99-8/00				**PF804**	Ate	Ø 22,20/20,64	Alu, +DSC
	99-8/01				**PF284**	Ate	Ø 22,20/20,64	Alu, -DSC

BMW

		Spare Parts	F/R	L/R	FRITECH ref.		DIMENSIONS mm.	NOTE
318 Ci (Exc. Cabrio) Eng.M43B19 (87kW)	9/01-				**PF614**	Ate	Ø 23,81/22,00	-DSC
	9/00-				**PF628**	Ate	Ø 23,81/22,20	Alu, +DSC
	99-				**CZ073**	Fte	Ø 22,20	Alu
	99-				**PZ080**	Fte	Ø 19,05	Pla
	99-				**PZ102**	Fte	Ø 19,05	
320 CD Eng.M47N204D4 (110kW)	03-				**PF628**	Ate	Ø 23,81/22,20	Alu, +DSC
	03-				**CZ073**	Fte	Ø 22,20	Alu
	03-				**PZ080**	Fte	Ø 19,05	Pla
	03-				**PZ102**	Fte	Ø 19,05	
320 Ci Eng.M54226S1/ M54B22 (125kW)	00-06				**PF615**	Ate	Ø 23,81/22,00	-DSC
	00-				**CZ073**	Fte	Ø 22,20	Alu
	3/01-				**PZ080**	Fte	Ø 19,05	Pla
	3/01-				**PZ102**	Fte	Ø 19,05	
320 Ci (Exc. Cabrio) Eng.M52B(206S4) (110kW)	99-				**CZ073**	Fte	Ø 22,20	Alu
	99-				**PZ080**	Fte	Ø 19,05	Pla
	99-				**PZ102**	Fte	Ø 19,05	
323 Ci Eng.M52B25(Vanos) (125kW)	99-8/00				**PF804**	Ate	Ø 22,20/20,64	Alu, +DSC
	99-8/01				**PF284**	Ate	Ø 22,20/20,64	Alu, -DSC
	9/01-				**PF614**	Ate	Ø 23,81/22,00	-DSC
	99-				**CZ073**	Fte	Ø 22,20	Alu
	99-				**PZ080**	Fte	Ø 19,05	Pla
	99-				**PZ102**	Fte	Ø 19,05	
325 Ci Eng.M54256S5 (141kW)	00-04				**PF615**	Ate	Ø 23,81/22,00	-DSC
	00-				**CZ073**	Fte	Ø 22,20	Alu
	00-				**PZ080**	Fte	Ø 19,05	Pla
	00-				**PZ102**	Fte	Ø 19,05	
328 Ci (Exc. Cabrio) Eng.M52B28 (142kW)	99-8/00				**PF804**	Ate	Ø 22,20/20,64	Alu, +DSC
	99-8/01				**PF284**	Ate	Ø 22,20/20,64	Alu, -DSC
	9/01-				**PF614**	Ate	Ø 23,81/22,00	-DSC
	99-				**CZ073**	Fte	Ø 22,20	Alu
	99-				**PZ080**	Fte	Ø 19,05	Pla
	99-				**PZ102**	Fte	Ø 19,05	
330 CD Eng.M57N306D2 (150kW)	03-				**CZ073**	Fte	Ø 22,20	Alu
	03-				**PZ080**	Fte	Ø 19,05	Pla
	03-				**PZ102**	Fte	Ø 19,05	
330 Ci Eng.M54306S3 (170kW)	00-				**CZ073**	Fte	Ø 22,20	Alu
	00-				**PZ080**	Fte	Ø 19,05	Pla
	00-				**PZ102**	Fte	Ø 19,05	
3 IV Compact (E46) 6/01-12/04								
316 ti Eng.N42B18 (85kW)	01-				**CZ073**	Fte	Ø 22,20	Alu
	01-05				**PZ080**	Fte	Ø 19,05	Pla
	01-05				**PZ102**	Fte	Ø 19,05	
318 tD Eng.M47N204D4 (85kW)	03-				**CZ073**	Fte	Ø 22,20	Alu
	03-05				**PZ080**	Fte	Ø 19,05	Pla
	03-mag				**PZ102**	Fte	Ø 19,05	
318 ti Eng.N42B20/ N46B20 (105kW)	01-				**CZ073**	Fte	Ø 22,20	Alu
	01-05				**PZ080**	Fte	Ø 19,05	Pla
	01-05				**PZ102**	Fte	Ø 19,05	
320 tD Eng.M47N204D4 (110kW)	01-				**CZ073**	Fte	Ø 22,20	Alu
	01-05				**PZ080**	Fte	Ø 19,05	Pla
	01-05				**PZ102**	Fte	Ø 19,05	
325 ti Eng.M54256S5 (141kW)	01-				**CZ073**	Fte	Ø 22,20	Alu
	01-05				**PZ080**	Fte	Ø 19,05	Pla
	01-05				**PZ102**	Fte	Ø 19,05	
3 IV Touring (E46) 10/99-12/04								
316 i Eng.N42B18 (85kW)	02-				**PF628**	Ate	Ø 23,81/22,20	Alu, +DSC
	02-				**CZ073**	Fte	Ø 22,20	Alu
	02-				**PZ080**	Fte	Ø 19,05	Pla
	02-				**PZ102**	Fte	Ø 19,05	
316 i Eng.N45B16A (85kW)	02-				**CZ073**	Fte	Ø 22,20	Alu
318 D Eng.M47N204D4 (85kW)	02-				**PF628**	Ate	Ø 23,81/22,20	Alu, +DSC
	02-				**CZ073**	Fte	Ø 22,20	Alu
	02-				**PZ080**	Fte	Ø 19,05	Pla
	02-				**PZ102**	Fte	Ø 19,05	

		Spare Parts	F/R	L/R	FRITECH ref.		DIMENSIONS mm.	NOTE
318 i Eng.M43B19 (85-87kW)	99-8/00				**PF804**	Ate	Ø 22,20/20,64	Alu, +DSC
	99-8/01				**PF284**	Ate	Ø 22,20/20,64	Alu, -DSC
	9/01-				**PF614**	Ate	Ø 23,81/22,00	-DSC
	9/00-				**PF628**	Ate	Ø 23,81/22,20	Alu, +DSC
	99-				**CZ073**	Fte	Ø 22,20	Alu
	99-				**PZ080**	Fte	Ø 19,05	Pla
	99-				**PZ102**	Fte	Ø 19,05	
318 i Eng.N42B20/ N46B20 (105kW)	01-				**PF628**	Ate	Ø 23,81/22,20	Alu, +DSC
	01-				**CZ073**	Fte	Ø 22,20	Alu
	3/01-				**PZ080**	Fte	Ø 19,05	Pla
	3/01-				**PZ102**	Fte	Ø 19,05	
320 D Eng.M47D20 (100kW)	00-8/00				**PF804**	Ate	Ø 22,20/20,64	Alu, +DSC
	00-8/01				**PF284**	Ate	Ø 22,20/20,64	Alu, -DSC
	9/01-				**PF614**	Ate	Ø 23,81/22,00	-DSC
	9/00-				**PF628**	Ate	Ø 23,81/22,20	Alu, +DSC
	00-				**CZ073**	Fte	Ø 22,20	Alu
	00-				**PZ080**	Fte	Ø 19,05	Pla
	00-				**PZ102**	Fte	Ø 19,05	
320 D Eng.M47N204D4 (110kW)	01-				**PF628**	Ate	Ø 23,81/22,20	Alu, +DSC
	01-				**CZ073**	Fte	Ø 22,20	Alu
	3/01-				**PZ080**	Fte	Ø 19,05	Pla
	3/01-				**PZ102**	Fte	Ø 19,05	
320 i Eng.M52B(206S3)Vanos (110kW)	99-00				**PF284**	Ate	Ø 22,20/20,64	Alu, -DSC
	99-				**CZ073**	Fte	Ø 22,20	Alu
	99-				**PZ080**	Fte	Ø 19,05	Pla
	99-				**PZ102**	Fte	Ø 19,05	
320 i Eng.M54226S1 (125kW)	00-8/01				**PF284**	Ate	Ø 22,20/20,64	Alu, -DSC
	9/01-				**PF614**	Ate	Ø 23,81/22,00	-DSC
	00-				**CZ073**	Fte	Ø 22,20	Alu
	00-				**PZ080**	Fte	Ø 19,05	Pla
	00-				**PZ102**	Fte	Ø 19,05	
325 i, xi Eng.M54256S5 (141kW)	00-04				**PF615**	Ate	Ø 23,81/22,00	-DSC
	00-				**CZ073**	Fte	Ø 22,20	Alu
	00-				**PZ080**	Fte	Ø 19,05	Pla
	00-				**PZ102**	Fte	Ø 19,05	
328 i Eng.M52B28 (142kW)	99-8/00				**PF284**	Ate	Ø 22,20/20,64	Alu, -DSC
	99-8/00				**PF804**	Ate	Ø 22,20/20,64	Alu, +DSC
	99-				**CZ073**	Fte	Ø 22,20	Alu
	99-				**PZ080**	Fte	Ø 19,05	Pla
	99-				**PZ102**	Fte	Ø 19,05	
330 D, xd Eng.M57D30 (135kW)	99-				**CZ073**	Fte	Ø 22,20	Alu
	99-				**PZ080**	Fte	Ø 19,05	Pla
	99-				**PZ102**	Fte	Ø 19,05	
330 D, xd Eng.M57N306D2 (150kW)	03-				**CZ073**	Fte	Ø 22,20	Alu
	03-				**PZ080**	Fte	Ø 19,05	Pla
	03-				**PZ102**	Fte	Ø 19,05	
330 i, xi Eng.M54306S3 (170kW)	00-				**CZ073**	Fte	Ø 22,20	Alu
	00-				**PZ080**	Fte	Ø 19,05	Pla
	00-				**PZ102**	Fte	Ø 19,05	
3 V (E90) 1/05-11/11								
316d Eng.N47D20A (85kW)	09-				**PF890**	Ate	Ø 25,40/22,20	Alu
	09-				**CZ118**	Fte	Ø 22,20	
316i Eng.N43B16A (90kW)	07-				**PF802**	Ate	Ø 23,81/22,20	Alu
316i Eng.N45B16A (85kW)	2/06-3/07				**PF802**	Ate	Ø 23,81/22,20	Alu
	-10/06				**CZ048**	Fte	Ø 22,20	
	11/06-				**CZ118**	Fte	Ø 22,20	
	06-				**PZ080**	Fte	Ø 19,05	Pla
	06-				**PZ102**	Fte	Ø 19,05	
318 D Eng.M47T2D20 (90kW)	05-3/07				**PF802**	Ate	Ø 23,81/22,20	Alu
	-10/06				**CZ048**	Fte	Ø 22,20	
	11/06-				**CZ118**	Fte	Ø 22,20	
	05-				**PZ080**	Fte	Ø 19,05	Pla
	05-				**PZ102**	Fte	Ø 19,05	

BMW

		Spare Parts	F/R	L/R	FRITECH ref.		DIMENSIONS mm.	NOTE
318 D Eng.N47D20A (105kW)	07-				**PF802**	Ate	Ø 23,81/22,20	Alu
	-10/06				**CZ048**	Fte	Ø 22,20	
	11/06-				**CZ118**	Fte	Ø 22,20	
	07-				**PZ080**	Fte	Ø 19,05	Pla
	07-				**PZ102**	Fte	Ø 19,05	
318i Eng.N42B20 (105kW)	07-				**PF802**	Ate	Ø 23,81/22,20	Alu
	07-				**PZ080**	Fte	Ø 19,05	Pla
	07-				**PZ102**	Fte	Ø 19,05	
318i Eng.N46B20 (95kW)	05-3/07				**PF802**	Ate	Ø 23,81/22,20	Alu
	-10/06				**CZ048**	Fte	Ø 22,20	
	11/06-				**CZ118**	Fte	Ø 22,20	
	05-				**PZ080**	Fte	Ø 19,05	Pla
	05-				**PZ102**	Fte	Ø 19,05	
320 D Eng.M47N204D4 (110kW)	09-				**CZ048**	Fte	Ø 22,20	
	09-				**PZ080**	Fte	Ø 19,05	Pla
	09-				**PZ102**	Fte	Ø 19,05	
320 D, xd Eng.M47N204D5/ N47D20C (120kW)	05-				**PF890**	Ate	Ø 25,40/22,20	Alu
	-10/06				**CZ048**	Fte	Ø 22,20	
	11/06-				**CZ118**	Fte	Ø 22,20	
	05-				**PZ080**	Fte	Ø 19,05	Pla
	05-				**PZ102**	Fte	Ø 19,05	
320 D, xd Eng.N47D20A (130kW)	07-5/08				**PF890**	Ate	Ø 25,40/22,20	Alu
	07-				**CZ118**	Fte	Ø 22,20	
320 D, xd Eng.N47D20C (135kW)	10-				**PF890**	Ate	Ø 25,40/22,20	Alu
	10-				**CZ118**	Fte	Ø 22,20	
320 si Eng.N45B20A (127kW)	06-5/08				**PF890**	Ate	Ø 25,40/22,20	Alu
	-10/06				**CZ048**	Fte	Ø 22,20	
	11/06-				**CZ118**	Fte	Ø 22,20	
	06-				**PZ080**	Fte	Ø 19,05	Pla
	06-				**PZ102**	Fte	Ø 19,05	
320i Eng.N43B20A (125kW)	07-				**PF802**	Ate	Ø 23,81/22,20	Alu
	07-				**CZ118**	Fte	Ø 22,20	
320i Eng.N46B20A/ C (110kW)	05-3/07				**PF802**	Ate	Ø 23,81/22,20	Alu
	-10/06				**CZ048**	Fte	Ø 22,20	
	11/06-				**CZ118**	Fte	Ø 22,20	
	05-				**PZ080**	Fte	Ø 19,05	Pla
	05-				**PZ102**	Fte	Ø 19,05	
325 Eng.N52NB25A (130kW)	06-07				**PF890**	Ate	Ø 25,40/22,20	Alu
	06-07				**CZ118**	Fte	Ø 22,20	
325 D Eng.M57306D3 (145kW)	06-5/08				**PF890**	Ate	Ø 25,40/22,20	Alu
	-10/06				**CZ048**	Fte	Ø 22,20	
	11/06-				**CZ118**	Fte	Ø 22,20	
	06-				**PZ080**	Fte	Ø 19,05	Pla
	06-				**PZ102**	Fte	Ø 19,05	
325 D Eng.N47D20C (150kW)	10-				**PF890**	Ate	Ø 25,40/22,20	Alu
	10-				**CZ118**	Fte	Ø 22,20	
325i, xi Eng.N52B25C (160kW)	05-5/08				**PF890**	Ate	Ø 25,40/22,20	Alu
	05-				**CZ048**	Fte	Ø 22,20	
	05-				**PZ080**	Fte	Ø 19,05	Pla
	05-				**PZ102**	Fte	Ø 19,05	
325i, xi, xD Eng.N53B30A (160kW)	08-				**PF890**	Ate	Ø 25,40/22,20	Alu
	08-				**CZ118**	Fte	Ø 22,20	
328i Eng.N52NB30A (187kW)	05-07				**PF890**	Ate	Ø 25,40/22,20	Alu
330 D, xd Eng.M57T2D30 (170kW)	05-5/08				**PF890**	Ate	Ø 25,40/22,20	Alu
	-10/06				**CZ048**	Fte	Ø 22,20	
	11/06-				**CZ118**	Fte	Ø 22,20	
	05-				**PZ080**	Fte	Ø 19,05	Pla
	05-				**PZ102**	Fte	Ø 19,05	
330 D, xd Eng.N57D30A (180kW)	08-				**PF890**	Ate	Ø 25,40/22,20	Alu
	08-				**CZ118**	Fte	Ø 22,20	
330i, xi Eng.N52B30A (190kW)	05-5/08				**PF890**	Ate	Ø 25,40/22,20	Alu
	-10/06				**CZ048**	Fte	Ø 22,20	
	11/06-				**CZ118**	Fte	Ø 22,20	
	05-				**PZ080**	Fte	Ø 19,05	Pla

		Spare Parts	F/R	L/R	FRITECH ref.		DIMENSIONS mm.	NOTE
330i, xi Eng.N52B30A (190kW)	05-				**PZ102**	Fte	Ø 19,05	
330i, xi, xD Eng.N53B30A/N52B30A (200kW)	07-5/08				**PF890**	Ate	Ø 25,40/22,20	Alu
	07-				**CZ118**	Fte	Ø 22,20	
335 D Eng.M57N306D5 (210kW)	06-5/08				**PF890**	Ate	Ø 25,40/22,20	Alu
	06-				**CZ048**	Fte	Ø 22,20	
	06-				**PZ080**	Fte	Ø 19,05	Pla
	06-				**PZ102**	Fte	Ø 19,05	
335i Eng.N54B30A (220kW)	06-5/08				**PF890**	Ate	Ø 25,40/22,20	Alu
	06-				**CZ118**	Fte	Ø 22,20	
335i, xi, xD Eng.N54B30A (225kW)	06-5/08				**PF890**	Ate	Ø 25,40/22,20	Alu
	-10/06				**CZ048**	Fte	Ø 22,20	
	11/06-				**CZ118**	Fte	Ø 22,20	
	06-				**PZ080**	Fte	Ø 19,05	Pla
	06-				**PZ102**	Fte	Ø 19,05	
M3 Eng.S65B40A (309kW)	08-				**CZ118**	Fte	Ø 22,20	
	08-				**PZ080**	Fte	Ø 19,05	Pla
	08-				**PZ102**	Fte	Ø 19,05	
3 V Cabrio (E93) 3/07-11/11								
320 D Eng.N47D20C (135kW)	10-				**PF890**	Ate	Ø 25,40/22,20	Alu
	10-				**CZ118**	Fte	Ø 22,20	
320 D, xd Eng.N47D20A (130kW)	3/08-5/08				**PF890**	Ate	Ø 25,40/22,20	Alu
	08-				**PZ080**	Fte	Ø 19,05	Pla
	08-				**PZ102**	Fte	Ø 19,05	
320i Eng.N43B20A (125kW)	07-5/08				**PF890**	Ate	Ø 25,40/22,20	Alu
	07-				**CZ118**	Fte	Ø 22,20	
	07-				**PZ080**	Fte	Ø 19,05	Pla
	07-				**PZ102**	Fte	Ø 19,05	
320i Eng.N46NB20B (110kW)	3/07-8/07				**PF890**	Ate	Ø 25,40/22,20	Alu
	07-				**CZ118**	Fte	Ø 22,20	
	3/07-8/07				**PZ080**	Fte	Ø 19,05	Pla
	3/07-8/07				**PZ102**	Fte	Ø 19,05	
325 D Eng.M57306D3 (145kW)	07-5/08				**PF890**	Ate	Ø 25,40/22,20	Alu
	07-				**PZ080**	Fte	Ø 19,05	Pla
	07-				**PZ102**	Fte	Ø 19,05	
325 D Eng.N57D30A (150kW)	10-				**CZ118**	Fte	Ø 22,20	
325i Eng.N52B25A/ N52B25 (160kW)	07-5/08				**PF890**	Ate	Ø 25,40/22,20	Alu
	07-				**CZ118**	Fte	Ø 22,20	
	07-				**PZ080**	Fte	Ø 19,05	Pla
	07-				**PZ102**	Fte	Ø 19,05	
330 D Eng.M57306D3 (170kW)	07-5/08				**PF890**	Ate	Ø 25,40/22,20	Alu
	07-				**CZ118**	Fte	Ø 22,20	
	07-				**PZ080**	Fte	Ø 19,05	Pla
	07-				**PZ102**	Fte	Ø 19,05	
330 D Eng.N57D30A (180kW)	09-				**PF890**	Ate	Ø 25,40/22,20	Alu
330i Eng.N52B30A (200kW)	07-5/08				**PF890**	Ate	Ø 25,40/22,20	Alu
	07-				**CZ118**	Fte	Ø 22,20	
	07-				**PZ080**	Fte	Ø 19,05	Pla
	07-				**PZ102**	Fte	Ø 19,05	
330i Eng.N52NB30B (190kW)	07-				**CZ118**	Fte	Ø 22,20	
335i Eng.N54B30A (225kW)	07-5/08				**PF890**	Ate	Ø 25,40/22,20	Alu
	07-				**CZ118**	Fte	Ø 22,20	
	07-				**PZ080**	Fte	Ø 19,05	Pla
	07-				**PZ102**	Fte	Ø 19,05	
M3 Eng.S65B40A (309kW)	08-				**CZ118**	Fte	Ø 22,20	
	08-				**PZ080**	Fte	Ø 19,05	Pla
	08-				**PZ102**	Fte	Ø 19,05	
3 V Coupe (E92) 9/06-11/11								
320 D, xd Eng.N47D20A (130kW)	07-5/08				**PF890**	Ate	Ø 25,40/22,20	Alu
	07-				**CZ118**	Fte	Ø 22,20	
	07-				**PZ080**	Fte	Ø 19,05	Pla
	07-				**PZ102**	Fte	Ø 19,05	
320 D, xd Eng.N47D20C (135kW)	10-				**PF890**	Ate	Ø 25,40/22,20	Alu
	10-				**CZ118**	Fte	Ø 22,20	

BMW

		Spare Parts	F/R	L/R	FRITECH ref.		DIMENSIONS mm.	NOTE
320i Eng.N43B20A (125kW)	07-				**PF890**	Ate	Ø 25,40/22,20	Alu
	07-				**CZ118**	Fte	Ø 22,20	
	07-				**PZ080**	Fte	Ø 19,05	Pla
	07-				**PZ102**	Fte	Ø 19,05	
320i Eng.N46B20B (110kW)	06-07				**PF890**	Ate	Ø 25,40/22,20	Alu
	06-07				**PZ080**	Fte	Ø 19,05	Pla
	06-07				**PZ102**	Fte	Ø 19,05	
325 D Eng.M57306D3 (145kW)	07-5/08				**PF890**	Ate	Ø 25,40/22,20	Alu
	07-				**CZ118**	Fte	Ø 22,20	
	07-				**PZ080**	Fte	Ø 19,05	Pla
	07-				**PZ102**	Fte	Ø 19,05	
325 D Eng.N57D30A (150kW)	10-				**PF890**	Ate	Ø 25,40/22,20	Alu
	10-				**CZ118**	Fte	Ø 22,20	
325 xi Eng.N53B30/ N53B30A (125kW)	07-				**CZ118**	Fte	Ø 22,20	
325i, xi Eng.N52B25C/ N52B25/ N52B25A (160kW)	06-5/08				**PF890**	Ate	Ø 25,40/22,20	Alu
	06-				**CZ048**	Fte	Ø 22,20	
	06-				**PZ080**	Fte	Ø 19,05	Pla
	06-				**PZ102**	Fte	Ø 19,05	
330 D, xd Eng.M57T2D30/ M57306D3 (170kW)	06-5/08				**PF890**	Ate	Ø 25,40/22,20	Alu
	-10/06				**CZ048**	Fte	Ø 22,20	
	11/06-				**CZ118**	Fte	Ø 22,20	
	06-				**PZ080**	Fte	Ø 19,05	Pla
	06-				**PZ102**	Fte	Ø 19,05	
330 D, xd Eng.N57D30A (180kW)	10-				**PF890**	Ate	Ø 25,40/22,20	Alu
	08-				**CZ118**	Fte	Ø 22,20	
330i, xi Eng.N52B30A (190kW)	06-5/08				**PF890**	Ate	Ø 25,40/22,20	Alu
	06-				**CZ118**	Fte	Ø 22,20	
330i, xi, xD Eng.N53B30A (200kW)	06-5/08				**PF890**	Ate	Ø 25,40/22,20	Alu
	-10/06				**CZ048**	Fte	Ø 22,20	
	11/06-				**CZ118**	Fte	Ø 22,20	
	06-				**PZ080**	Fte	Ø 19,05	Pla
	06-				**PZ102**	Fte	Ø 19,05	
335 D Eng.M57N306D5 (210kW)	06-5/08				**PF890**	Ate	Ø 25,40/22,20	Alu
	06-				**CZ048**	Fte	Ø 22,20	
	06-				**PZ080**	Fte	Ø 19,05	Pla
	06-				**PZ102**	Fte	Ø 19,05	
335i, xi, xD Eng.N54B30A (225kW)	06-5/08				**PF890**	Ate	Ø 25,40/22,20	Alu
	-10/06				**CZ048**	Fte	Ø 22,20	
	11/06-				**CZ118**	Fte	Ø 22,20	
	06-				**PZ080**	Fte	Ø 19,05	Pla
	06-				**PZ102**	Fte	Ø 19,05	
3 V Touring (E91) 1/05-6/12								
316 D Eng.N47D20A (85kW)	10-				**CZ118**	Fte	Ø 22,20	
316i Eng.N43B16A (90kW)	07-				**CZ118**	Fte	Ø 22,20	
318 D Eng.M47T2D20 (90kW)	05-5/08				**PF890**	Ate	Ø 25,40/22,20	Alu
	-10/06				**CZ048**	Fte	Ø 22,20	
	11/06-				**CZ118**	Fte	Ø 22,20	
	05-				**PZ080**	Fte	Ø 19,05	Pla
	05-				**PZ102**	Fte	Ø 19,05	
318 D Eng.N47D20A (105kW)	07-5/08				**PF890**	Ate	Ø 25,40/22,20	Alu
	07-				**CZ118**	Fte	Ø 22,20	
	07-				**PZ080**	Fte	Ø 19,05	Pla
	07-				**PZ102**	Fte	Ø 19,05	
318i Eng.N42B20 (105kW)	07-5/08				**PF890**	Ate	Ø 25,40/22,20	Alu
	07-				**CZ118**	Fte	Ø 22,20	
	07-				**PZ080**	Fte	Ø 19,05	Pla
	07-				**PZ102**	Fte	Ø 19,05	
318i Eng.N46B20 (95kW)	06-5/08				**PF890**	Ate	Ø 25,40/22,20	Alu
	-10/06				**CZ048**	Fte	Ø 22,20	
	11/06-				**CZ118**	Fte	Ø 22,20	
	06-				**PZ080**	Fte	Ø 19,05	Pla
	06-				**PZ102**	Fte	Ø 19,05	
320 D Eng.M47N204D4/ M47D20TU (110kW)	-10/06				**CZ048**	Fte	Ø 22,20	
	11/06-				**CZ118**	Fte	Ø 22,20	

		Spare Parts	F/R	L/R	FRITECH ref.		DIMENSIONS mm.	NOTE
320 D Eng.M47N204D4/ M47D20TU (110kW)	05-				**PZ080**	Fte	Ø 19,05	Pla
	05-				**PZ102**	Fte	Ø 19,05	
320 D, xd Eng.M47N204D4 (120kW)	05-5/08				**PF890**	Ate	Ø 25,40/22,20	Alu
	-10/06				**CZ048**	Fte	Ø 22,20	
	11/06-				**CZ118**	Fte	Ø 22,20	
	05-				**PZ080**	Fte	Ø 19,05	Pla
	05-				**PZ102**	Fte	Ø 19,05	
320 D, xd Eng.N47D20A (130kW)	07-5/08				**PF890**	Ate	Ø 25,40/22,20	Alu
	07-				**CZ118**	Fte	Ø 22,20	
	07-				**PZ080**	Fte	Ø 19,05	Pla
	07-				**PZ102**	Fte	Ø 19,05	
320 D, xd Eng.N47D20C (135kW)	10-				**CZ118**	Fte	Ø 22,20	
320i Eng.N43B20A (125kW)	07-5/08				**PF890**	Ate	Ø 25,40/22,20	Alu
	07-				**CZ118**	Fte	Ø 22,20	
	07-				**PZ080**	Fte	Ø 19,05	Pla
	07-				**PZ102**	Fte	Ø 19,05	
320i Eng.N46B20A/ C (110kW)	05-5/08				**PF890**	Ate	Ø 25,40/22,20	Alu
	-10/06				**CZ048**	Fte	Ø 22,20	
	11/06-				**CZ118**	Fte	Ø 22,20	
325 Eng.N52NB25A (130kW)	06-07				**PF890**	Ate	Ø 25,40/22,20	Alu
	06-07				**CZ118**	Fte	Ø 22,20	
325 D Eng.M57306D3 (145kW)	06-5/08				**PF890**	Ate	Ø 25,40/22,20	Alu
	-10/06				**CZ048**	Fte	Ø 22,20	
	11/06-				**CZ118**	Fte	Ø 22,20	
	06-				**PZ080**	Fte	Ø 19,05	Pla
	06-				**PZ102**	Fte	Ø 19,05	
325 D Eng.N57D30A (150kW)	10-				**CZ118**	Fte	Ø 22,20	
325 i, xi Eng.N53B30/ N53B30A (160kW)	07-				**PF890**	Ate	Ø 25,40/22,20	Alu
	07-				**CZ118**	Fte	Ø 22,20	
325 xi Eng.N52B25C (160kW)	05-5/08				**PF890**	Ate	Ø 25,40/22,20	Alu
	-10/06				**CZ048**	Fte	Ø 22,20	
	11/06-				**CZ118**	Fte	Ø 22,20	
	05-				**PZ080**	Fte	Ø 19,05	Pla
	05-				**PZ102**	Fte	Ø 19,05	
325i Eng.N52B25C (160kW)	05-5/08				**PF890**	Ate	Ø 25,40/22,20	Alu
	-10/06				**CZ048**	Fte	Ø 22,20	
	11/06-				**CZ118**	Fte	Ø 22,20	
	05-				**PZ080**	Fte	Ø 19,05	Pla
	05-				**PZ102**	Fte	Ø 19,05	
330 D, xd Eng.M57T2D30 (170kW)	05-5/08				**PF890**	Ate	Ø 25,40/22,20	Alu
	-10/06				**CZ048**	Fte	Ø 22,20	
	11/06-				**CZ118**	Fte	Ø 22,20	
	05-				**PZ080**	Fte	Ø 19,05	Pla
	05-				**PZ102**	Fte	Ø 19,05	
330 D, xd Eng.N57D30A (180kW)	09-				**PF890**	Ate	Ø 25,40/22,20	Alu
	09-				**CZ118**	Fte	Ø 22,20	
330i, xi Eng.N52B30A (190kW)	05-5/08				**PF890**	Ate	Ø 25,40/22,20	Alu
	-10/06				**CZ048**	Fte	Ø 22,20	
	11/06-				**CZ118**	Fte	Ø 22,20	
	05-				**PZ080**	Fte	Ø 19,05	Pla
	05-				**PZ102**	Fte	Ø 19,05	
330i, xi, xD Eng.N53B30A (200kW)	07-5/08				**PF890**	Ate	Ø 25,40/22,20	Alu
	07-				**CZ118**	Fte	Ø 22,20	
	07-				**PZ080**	Fte	Ø 19,05	Pla
	07-				**PZ102**	Fte	Ø 19,05	
335 D Eng.M57N306D5 (210kW)	06-5/08				**PF890**	Ate	Ø 25,40/22,20	Alu
	06-				**CZ048**	Fte	Ø 22,20	
	06-				**PZ080**	Fte	Ø 19,05	Pla
	06-				**PZ102**	Fte	Ø 19,05	
335i, xi, xD Eng.N54B30A (225kW)	06-5/08				**PF890**	Ate	Ø 25,40/22,20	Alu
	-10/06				**CZ048**	Fte	Ø 22,20	
	11/06-				**CZ118**	Fte	Ø 22,20	
	06-				**PZ080**	Fte	Ø 19,05	Pla
	06-				**PZ102**	Fte	Ø 19,05	

BMW

		Spare Parts	F/R	L/R	FRITECH ref.		DIMENSIONS mm.	NOTE
3 VI (F30, F35) 12/11-								
316d Eng.N47D20C (85kW)	12-				**PZ080**	Fte	Ø 19,05	Pla
	12-				**PZ102**	Fte	Ø 19,05	
316i Eng.N13B16A (100kW)	12-				**PZ080**	Fte	Ø 19,05	Pla
	12-				**PZ102**	Fte	Ø 19,05	
318d, xd Eng.B47D20A (110kW)	15-				**PZ080**	Fte	Ø 19,05	Pla
	15-				**PZ102**	Fte	Ø 19,05	
318d, xD Eng.N47D20C (105kW)	12-				**PZ080**	Fte	Ø 19,05	Pla
	12-				**PZ102**	Fte	Ø 19,05	
318i (100kW)	15-				**PZ080**	Fte	Ø 19,05	Pla
	15-				**PZ102**	Fte	Ø 19,05	
320d Eng.N47D20C (120kW)	11-				**PZ080**	Fte	Ø 19,05	Pla
	11-				**PZ102**	Fte	Ø 19,05	
320d, xd Eng.B47D20A (140kW)	15-				**PZ080**	Fte	Ø 19,05	Pla
	15-				**PZ102**	Fte	Ø 19,05	
320d, xD Eng.N47D20C (135kW)	11-				**PZ080**	Fte	Ø 19,05	Pla
	11-				**PZ102**	Fte	Ø 19,05	
320i Eng.N13B16A (125kW)	12-				**PZ080**	Fte	Ø 19,05	Pla
	12-				**PZ102**	Fte	Ø 19,05	
320i, xd Eng.N20B20A (135kW)	12-				**PZ080**	Fte	Ø 19,05	Pla
	12-				**PZ102**	Fte	Ø 19,05	
328i Eng.N26B20A (180kW)	11-				**PZ080**	Fte	Ø 19,05	Pla
	11-				**PZ102**	Fte	Ø 19,05	
330i, xD Eng.B48B20A (185kW)	15-				**PZ080**	Fte	Ø 19,05	Pla
	15-				**PZ102**	Fte	Ø 19,05	
335i, xD Eng.N55B30A (225kW)	11-				**PZ080**	Fte	Ø 19,05	Pla
	11-				**PZ102**	Fte	Ø 19,05	
340i, xd Eng.B58B30A (240kW)	15-				**PZ080**	Fte	Ø 19,05	Pla
	15-				**PZ102**	Fte	Ø 19,05	
3 VI Touring (F31) 7/12-								
316d Eng.N47D20C (85kW)	12-				**PZ080**	Fte	Ø 19,05	Pla
	12-				**PZ102**	Fte	Ø 19,05	
316i Eng.N13B16A (100kW)	13-				**PZ080**	Fte	Ø 19,05	Pla
	13-				**PZ102**	Fte	Ø 19,05	
318d xD Eng.N47D20C (105kW)	12-				**PZ080**	Fte	Ø 19,05	Pla
	12-				**PZ102**	Fte	Ø 19,05	
318d, xd Eng.B47D20A (110kW)	15-				**PZ080**	Fte	Ø 19,05	Pla
	15-				**PZ102**	Fte	Ø 19,05	
318i (100kW)	15-				**PZ080**	Fte	Ø 19,05	Pla
	15-				**PZ102**	Fte	Ø 19,05	
320d, xd Eng.B47D20A (140kW)	15-				**PZ080**	Fte	Ø 19,05	Pla
	15-				**PZ102**	Fte	Ø 19,05	
320d, xD Eng.N47D20C (120kW)	13-				**PZ080**	Fte	Ø 19,05	Pla
	13-				**PZ102**	Fte	Ø 19,05	
320d, xD Eng.N47D20C (135kW)	12-				**PZ080**	Fte	Ø 19,05	Pla
	12-				**PZ102**	Fte	Ø 19,05	
320i, xD Eng.N20B20A (135kW)	12-				**PZ080**	Fte	Ø 19,05	Pla
	12-				**PZ102**	Fte	Ø 19,05	
325d Eng.N47D20D (155-160kW)	13-				**PZ080**	Fte	Ø 19,05	Pla
	13-				**PZ102**	Fte	Ø 19,05	
328i, xD Eng.N26B20A (180kW)	12-				**PZ080**	Fte	Ø 19,05	Pla
	12-				**PZ102**	Fte	Ø 19,05	
330i, xd Eng.B48B20A (185kW)	15-				**PZ080**	Fte	Ø 19,05	Pla
	15-				**PZ102**	Fte	Ø 19,05	
335i, xD Eng.N55B30A (225kW)	13-				**PZ080**	Fte	Ø 19,05	Pla
	13-				**PZ102**	Fte	Ø 19,05	
340i, xd Eng.B58B30A (240kW)	15-				**PZ080**	Fte	Ø 19,05	Pla
	15-				**PZ102**	Fte	Ø 19,05	
4 I (F32, F33) Coupe, Cabrio 10/13-								
420d Eng.N47D20C (135kW)	13-				**PZ080**	Fte	Ø 19,05	Pla
	13-				**PZ102**	Fte	Ø 19,05	
420d, xD Eng.B47D20A (140kW)	15-				**PZ080**	Fte	Ø 19,05	Pla
420i, xD Eng.N20B20B (135kW)	13-				**PZ080**	Fte	Ø 19,05	Pla
	13-				**PZ102**	Fte	Ø 19,05	

		Spare Parts	F/R	L/R	FRITECH ref.		DIMENSIONS mm.	NOTE
425d Eng.N47D20D (155-160kW)	14-				**PZ080**	Fte	Ø 19,05	Pla
	14-				**PZ102**	Fte	Ø 19,05	
428i, xD Eng.N20B20A (180kW)	13-				**PZ080**	Fte	Ø 19,05	Pla
	13-				**PZ102**	Fte	Ø 19,05	
430d, xD Eng.N57D30A (190kW)	13-				**PZ080**	Fte	Ø 19,05	Pla
	13-				**PZ102**	Fte	Ø 19,05	
435 d, Xd Eng.N57D30B (230kW)	13-				**PZ080**	Fte	Ø 19,05	Pla
	13-				**PZ102**	Fte	Ø 19,05	
435i, xD Eng.N55B30A (225kW)	13-				**PZ080**	Fte	Ø 19,05	Pla
	13-				**PZ102**	Fte	Ø 19,05	
M4 Eng.S55B30A (317kW)	14-				**PZ080**	Fte	Ø 19,05	Pla
	14-				**PZ102**	Fte	Ø 19,05	
4 I GC (F36) 3/14-								
418d Eng.N47D20C (105-110kW)	14-				**PZ080**	Fte	Ø 19,05	Pla
	14-				**PZ102**	Fte	Ø 19,05	
420d, xD Eng.B47D20A (140kW)	15-				**PZ080**	Fte	Ø 19,05	Pla
	15-				**PZ102**	Fte	Ø 19,05	
420d, xD Eng.N47D20C (135kW)	14-				**PZ080**	Fte	Ø 19,05	Pla
	14-				**PZ102**	Fte	Ø 19,05	
420i, xD Eng.N20B20B (135kW)	14-				**PZ080**	Fte	Ø 19,05	Pla
	14-				**PZ102**	Fte	Ø 19,05	
428i, xD Eng.N20B20A (180kW)	14-				**PZ080**	Fte	Ø 19,05	Pla
	14-				**PZ102**	Fte	Ø 19,05	
435i, xD Eng.N55B30A (225kW)	14-				**PZ080**	Fte	Ø 19,05	Pla
	14-				**PZ102**	Fte	Ø 19,05	
435i, xD Eng.N55B30A (250kW)	14-				**PZ080**	Fte	Ø 19,05	Pla
	14-				**PZ102**	Fte	Ø 19,05	
5 I (E12) 8/72-8/81								
518 Eng.M10B18/(2B4)/(32-32DID) (66kW)	6/74-5/81		R		**CF367**		Ø 22,22	Exc. Sweden
	79-81		R		**CF713**		Ø 22,22	Sweden
	6/75-6/81				**CZ013**		Ø 20,64	
	6/75-6/81				**PZ020**		Ø 19,05	
520 Eng.M10B20(Strombergvergaser) (85kW)	72-77		R		**CF367**		Ø 22,22	
	72-77				**CZ013**		Ø 20,64	
	72-77				**PZ020**		Ø 19,05	
520 i Eng.M10B20(K-Jetronic) (92kW)	75-79		R		**CF367**		Ø 22,22	
	75-79				**CZ013**		Ø 20,64	
	75-79				**PZ020**		Ø 19,05	
520 i Eng.M10B20(Schäfer-Inj.) (96kW)	72-75		R		**CF367**		Ø 22,22	
520/6 Eng.M20B20 (90kW)	77-6/81		R		**CF367**		Ø 22,22	
	77-6/81				**CZ013**		Ø 20,64	
	77-6/81				**PZ020**		Ø 19,05	
525 Eng.M30B25(32-40INAT) (107kW)	73-76				**CZ013**		Ø 20,64	
	73-76				**PZ020**		Ø 19,05	
525 Eng.M30B25(4A1) (110kW)	76-6/81				**CZ013**		Ø 20,64	
	76-6/81				**PZ020**		Ø 19,05	
528 Eng.M30B28 (121-125kW)	6/75-77				**CZ013**		Ø 20,64	
	6/75-77				**PZ020**		Ø 19,05	
528 i Eng.M30B28(L-Jetronic) (130-135kW)	77-6/81				**CZ013**		Ø 20,64	
	77-6/81				**PZ020**		Ø 19,05	
M 535 i Eng.M30B35(Motronic/ 9.3:1) (160kW)	4/80-5/81				**CZ013**		Ø 20,64	
	4/80-5/81				**PZ020**		Ø 19,05	
5 II (E28) 6/81-6/90								
518 Eng.M10B18(2B4) (66kW)	6/81-8/84		R		**CF156**		Ø 19,05	
	6/81-8/84				**PF123**	Ate	Ø 22,20	Alu, -ABS
	81-84				**CZ013**		Ø 20,64	
	81-84				**PZ050**		Ø 19,05	Alu
518 i Eng.M10B18(K-Jetronic) (75kW)	81-9/84		R		**CF156**		Ø 19,05	
	81-9/84				**PF123**	Ate	Ø 22,20	Alu, -ABS
	81-9/84				**CZ013**		Ø 20,64	
	81-9/84				**PZ050**		Ø 19,05	Alu
518 i Eng.M10B18(L-Jetronic) (77kW)	83-9/84		R		**CF156**		Ø 19,05	
	9/84-3/86		R		**CF523**		Ø 20,64	Alu
	83-87				**PF123**	Ate	Ø 22,20	Alu, -ABS

BMW

		Spare Parts	F/R	L/R	FRITECH ref.		DIMENSIONS mm.	NOTE
518 i Eng.M10B18(L-Jetronic) (77kW)	83-12/87				**CZ013**		Ø 20,64	
	83-87				**PZ050**		Ø 19,05	Alu
520 i Eng.M20 (110kW)	86-87				**PF326**	Trw	Ø 25,40	Alu
520 i Eng.M20B20(L/ K-Jetronic) (92kW)	81-8/84		R		**CF156**		Ø 19,05	
	9/84-87		R		**CF523**		Ø 20,64	Alu
	81-87				**PF123**	Ate	Ø 22,20	Alu, -ABS
	81-87				**CZ013**		Ø 20,64	
	81-87				**PZ050**		Ø 19,05	Alu
520 i Eng.M20B20(Motronic/ Kat.) (95kW)	85-87		R		**CF523**		Ø 20,64	Alu
	85-12/87				**CZ013**		Ø 20,64	
	85-87				**PZ050**		Ø 19,05	Alu
524 D Eng.M21D24 (63kW)	3/86-12/87				**PZ050**		Ø 19,05	Alu
524 tD Eng.M21D24 (85kW)	83-8/84		R		**CF156**		Ø 19,05	
	9/84-87		R		**CF523**		Ø 20,64	Alu
	83-87				**PF123**	Ate	Ø 22,20	Alu, -ABS
	83-87				**CZ013**		Ø 20,64	
	83-87				**PZ050**		Ø 19,05	Alu
525 e 2.7 Eng.M20B27 (92-95kW)	83-12/87				**CZ013**		Ø 20,64	
	83-87				**PZ050**		Ø 19,05	Alu
528 i Eng.M30B28(L-Jetronic) (135kW)	81-12/87				**CZ013**		Ø 20,64	
	81-87				**PZ050**		Ø 19,05	Alu
535 i, M 535 i Eng.M30B35(Motronic) (141-160kW)	7/84-12/87				**CZ013**		Ø 20,64	
	81-87				**PZ050**		Ø 19,05	Alu
M5 3.5 Eng.S38B35 (211kW)	85-87				**PZ050**		Ø 19,05	Alu
5 III (E34) 1/88-9/95								
3.6 Kat M5 Eng.S38B36 (232kW)	88-92				**PF326**	Trw	Ø 25,40	Alu
3.6 M5 Eng.S38B36 (232kW)	88-92				**PF326**	Trw	Ø 25,40	Alu
3.8 M5 Eng.S38B38 (250kW)	92-95				**PF326**	Trw	Ø 25,40	Alu
518 i Eng.M40B18(Kat.) (83kW)	10/91-				**PF327**	Trw	Ø 25,40	Alu
	-9/91				**PF326**	Trw	Ø 25,40	Alu
	9/90-9/95				**CZ048**	Fte	Ø 22,20	
518 i Eng.M43B18 (85kW)	89-95				**PF327**	Trw	Ø 25,40	Alu
	9/90-9/95				**CZ048**	Fte	Ø 22,20	
520 i Eng.M20B20(Motronic/ Kat.) (95kW)	88-91				**PF326**	Trw	Ø 25,40	Alu
	9/90-91				**CZ048**	Fte	Ø 22,20	
520 i 24v Eng.M50B(206S1-206S2)Vanos (110kW)	-10/90				**PF326**	Trw	Ø 25,40	Alu
	11/90-				**PF327**	Trw	Ø 25,40	Alu
	9/90-9/95				**CZ048**	Fte	Ø 22,20	
524 TD Eng.M21D24 (85kW)	88-95				**PF326**	Trw	Ø 25,40	Alu
	9/90-9/95				**CZ048**	Fte	Ø 22,20	
525 Eng.M50B25 (141kW)	10/91-				**PF327**	Trw	Ø 25,40	Alu
	-9/91				**PF326**	Trw	Ø 25,40	Alu
	9/90-97				**CZ048**	Fte	Ø 22,20	
525 i Eng.M20B25(Kat.) (125kW)	88-91				**PF326**	Trw	Ø 25,40	Alu
	9/90-91				**CZ048**	Fte	Ø 22,20	
525 i 24v X Eng.M52B25(Vanos) (141kW)	89-95				**PF327**	Trw	Ø 25,40	Alu
	9/90-9/95				**CZ048**	Fte	Ø 22,20	
525 TD Eng.M51D25 (85kW)	93-95				**PF327**	Trw	Ø 25,40	Alu
	93-9/95				**CZ048**	Fte	Ø 22,20	
525 TDs Eng.M51D25(Inter.) (105kW)	91-95				**PF327**	Trw	Ø 25,40	Alu
	91-9/95				**CZ048**	Fte	Ø 22,20	
530 i Eng.M30B30(Kat.) (138kW)	88-91				**PF326**	Trw	Ø 25,40	Alu
	9/90-91				**CZ048**	Fte	Ø 22,20	
530 i V8 Eng.M60B30 (160kW)	92-9/95				**CZ048**	Fte	Ø 22,20	
535 i Eng.M30B35(Motronic/ 9:1/ Kat.) (155kW)	88-95				**PF326**	Trw	Ø 25,40	Alu
5 III Touring (E34) 11/91-1/97								
3.8 M5 Eng.S38B38 (250kW)	94-97				**PF326**	Trw	Ø 25,40	Alu
518 i Eng.M40B18(Kat.) (83kW)	93-94				**PF327**	Trw	Ø 25,40	Alu
	93-94				**CZ048**	Fte	Ø 22,20	
518 i, g Eng.M43B18 (85kW)	94-95				**PF327**	Trw	Ø 25,40	Alu
	94-97				**CZ048**	Fte	Ø 22,20	
520 i Eng.M50B(206S1-206S2)Vanos (110kW)	91-95				**PF327**	Trw	Ø 25,40	Alu
	91-97				**CZ048**	Fte	Ø 22,20	

		Spare Parts	F/R	L/R	FRITECH ref.		DIMENSIONS mm.	NOTE
525 i, X Eng.M50B25/ M52B25(Vanos) (141kW)	91-95				**PF327**	Trw	Ø 25,40	Alu
	91-97				**CZ048**	Fte	Ø 22,20	
525 TD Eng.M51D25 (85kW)	93-95				**PF327**	Trw	Ø 25,40	Alu
	93-97				**CZ048**	Fte	Ø 22,20	
525 TDs Eng.M51D25(Inter.) (105kW)	91-95				**PF327**	Trw	Ø 25,40	Alu
	91-97				**CZ048**	Fte	Ø 22,20	
530 i V8 Eng.M60B30 (160kW)	92-97				**CZ048**	Fte	Ø 22,20	
5 IV (E39) 11/95-7/03								
4.9 M5 Eng.S38B49 (294kW)	98-				**PF608**	Trw	Ø 25,40/20,64	Alu, +DSC
	98-				**PZ080**	Fte	Ø 19,05	Pla
	98-				**PZ102**	Fte	Ø 19,05	
520 D Eng.M47D20 (100kW)	00-02				**PF593**	Trw	Ø 25,40/20,64	Alu, -DSC
	00-02				**CZ048**	Fte	Ø 22,20	
	00-				**PZ080**	Fte	Ø 19,05	Pla
	00-				**PZ102**	Fte	Ø 19,05	
520 D Eng.M47N204D4 (110kW)	02-03				**PF593**	Trw	Ø 25,40/20,64	Alu, -DSC
	02-				**PZ080**	Fte	Ø 19,05	Pla
	02-				**PZ102**	Fte	Ø 19,05	
520 i Eng.M52B(206S3)Vanos (100kW)	99-				**PF608**	Trw	Ø 25,40/20,64	Alu, +DSC
	99-7/03				**PF593**	Trw	Ø 25,40/20,64	Alu, -DSC
	99-03				**CZ048**	Fte	Ø 22,20	
	99-03				**CZ088**	Fte	Ø 23,81	
	99-				**PZ080**	Fte	Ø 19,05	Pla
	99-				**PZ102**	Fte	Ø 19,05	
520 i Eng.M52B(206S3-206S4) (110kW)	96-8/97				**PF975**	Trw	Ø 19,05	Alu, -DSC
	9/97-00				**PF593**	Trw	Ø 25,40/20,64	Alu, -DSC
	96-00				**PF608**	Trw	Ø 25,40/20,64	Alu, +DSC
	96-00				**CZ048**	Fte	Ø 22,20	
	96-00				**CZ088**	Fte	Ø 23,81	
	96-				**PZ080**	Fte	Ø 19,05	Pla
	96-				**PZ102**	Fte	Ø 19,05	
520 i Eng.M54B22 (125kW)	00-03				**PF593**	Trw	Ø 25,40/20,64	Alu, -DSC
	9/00-				**PF608**	Trw	Ø 25,40/20,64	Alu, +DSC
	00-03				**CZ048**	Fte	Ø 22,20	
	00-03				**CZ088**	Fte	Ø 23,81	
	00-				**PZ080**	Fte	Ø 19,05	Pla
	00-				**PZ102**	Fte	Ø 19,05	
523 i Eng.M52B25(Vanos) (125kW)	95-8/97				**PF975**	Trw	Ø 19,05	Alu, -DSC
	9/00-				**PF608**	Trw	Ø 25,40/20,64	Alu, +DSC
	9/97-00				**PF593**	Trw	Ø 25,40/20,64	Alu, -DSC
	95-00				**CZ048**	Fte	Ø 22,20	
	95-00				**CZ088**	Fte	Ø 23,81	
	95-				**PZ080**	Fte	Ø 19,05	Pla
	95-				**PZ102**	Fte	Ø 19,05	
525 D Eng.M57256D1 (120kW)	00-7/03				**PF593**	Trw	Ø 25,40/20,64	Alu, -DSC
	9/00-				**PF608**	Trw	Ø 25,40/20,64	Alu, +DSC
	00-03				**CZ048**	Fte	Ø 22,20	
	00-03				**CZ088**	Fte	Ø 23,81	
	00-				**PZ080**	Fte	Ø 19,05	Pla
	00-				**PZ102**	Fte	Ø 19,05	
525 i Eng.M54256S5 (141kW)	00-7/03				**PF593**	Trw	Ø 25,40/20,64	Alu, -DSC
	9/00-				**PF608**	Trw	Ø 25,40/20,64	Alu, +DSC
	00-03				**CZ048**	Fte	Ø 22,20	
	00-03				**CZ088**	Fte	Ø 23,81	
	00-				**PZ080**	Fte	Ø 19,05	Pla
	00-				**PZ102**	Fte	Ø 19,05	
525 TD Eng.M51D25 (85kW)	9/97-03				**PF593**	Trw	Ø 25,40/20,64	Alu, -DSC
	97-03				**CZ048**	Fte	Ø 22,20	
	97-				**PZ080**	Fte	Ø 19,05	Pla
	97-				**PZ102**	Fte	Ø 19,05	
525 TDs Eng.M51D25(Inter.) (105kW)	96-8/97				**PF975**	Trw	Ø 19,05	Alu, -DSC
	9/97-03				**PF593**	Trw	Ø 25,40/20,64	Alu, -DSC
	96-03				**CZ048**	Fte	Ø 22,20	
	96-03				**CZ088**	Fte	Ø 23,81	

BMW

		Spare Parts	F/R	L/R	FRITECH ref.		DIMENSIONS mm.	NOTE
525 TDs Eng.M51D25(Inter.) (105kW)	96-				**PZ080**	Fte	Ø 19,05	Pla
	96-				**PZ102**	Fte	Ø 19,05	
528 i Eng.M52B28 (142kW)	95-8/97				**PF975**	Trw	Ø 19,05	Alu, -DSC
	9/97-00				**PF593**	Trw	Ø 25,40/20,64	Alu, -DSC
	95-00				**PF608**	Trw	Ø 25,40/20,64	Alu, +DSC
	95-00				**CZ048**	Fte	Ø 22,20	
	95-00				**CZ088**	Fte	Ø 23,81	
	95-				**PZ080**	Fte	Ø 19,05	Pla
	95-				**PZ102**	Fte	Ø 19,05	
530 D Eng.M57D30 (135kW)	98-00				**PF608**	Trw	Ø 25,40/20,64	Alu, +DSC
	98-00				**PF593**	Trw	Ø 25,40/20,64	Alu, -DSC
	98-00				**CZ048**	Fte	Ø 22,20	
	98-00				**CZ088**	Fte	Ø 23,81	
	98-				**PZ080**	Fte	Ø 19,05	Pla
	98-				**PZ102**	Fte	Ø 19,05	
530 D Eng.M57D30 (142kW)	00-7/03				**PF593**	Trw	Ø 25,40/20,64	Alu, -DSC
	9/00-				**PF608**	Trw	Ø 25,40/20,64	Alu, +DSC
	00-03				**CZ048**	Fte	Ø 22,20	
	00-03				**CZ088**	Fte	Ø 23,81	
	00-				**PZ080**	Fte	Ø 19,05	Pla
	00-				**PZ102**	Fte	Ø 19,05	
530 i Eng.M54306S3 (170kW)	00-7/03				**PF593**	Trw	Ø 25,40/20,64	Alu, -DSC
	9/00-				**PF608**	Trw	Ø 25,40/20,64	Alu, +DSC
	00-03				**CZ048**	Fte	Ø 22,20	
	00-03				**CZ088**	Fte	Ø 23,81	
	00-				**PZ080**	Fte	Ø 19,05	Pla
	00-				**PZ102**	Fte	Ø 19,05	
535 i Eng.M62B(358S1) (173kW)	96-8/97				**PF975**	Trw	Ø 19,05	Alu, -DSC
	96-99				**PF608**	Trw	Ø 25,40/20,64	Alu, +DSC
	96-99				**CZ048**	Fte	Ø 22,20	
	96-99				**CZ088**	Fte	Ø 23,81	
	96-99				**PZ080**	Fte	Ø 19,05	Pla
	96-99				**PZ102**	Fte	Ø 19,05	
535 i Eng.M62B(358S2) (180kW)	96-8/97				**PF975**	Trw	Ø 19,05	Alu, -DSC
	99-				**PF608**	Trw	Ø 25,40/20,64	Alu, +DSC
	99-03				**CZ048**	Fte	Ø 22,20	
	99-03				**CZ088**	Fte	Ø 23,81	
	99-				**PZ080**	Fte	Ø 19,05	Pla
	99-				**PZ102**	Fte	Ø 19,05	
540 i Eng.M62B44 (210kW)	96-8/97				**PF975**	Trw	Ø 19,05	Alu, -DSC
	96-				**PF608**	Trw	Ø 25,40/20,64	Alu, +DSC
	96-03				**CZ048**	Fte	Ø 22,20	
	96-03				**CZ088**	Fte	Ø 23,81	
	96-				**PZ080**	Fte	Ø 19,05	Pla
	96-				**PZ102**	Fte	Ø 19,05	
5 IV Touring (E39) 11/95-7/03								
520 D Eng.M47D20/ M47204D1 (100kW)	00-				**PF593**	Trw	Ø 25,40/20,64	Alu, -DSC
	00-02				**CZ048**	Fte	Ø 22,20	
	00-				**PZ080**	Fte	Ø 19,05	Pla
	00-				**PZ102**	Fte	Ø 19,05	
520 D Eng.M47N204D4 (110kW)	02-				**PF593**	Trw	Ø 25,40/20,64	Alu, -DSC
	02-				**PZ080**	Fte	Ø 19,05	Pla
	02-				**PZ102**	Fte	Ø 19,05	
520 i Eng.M52B(206S3)Vanos (100kW)	99-03				**PF593**	Trw	Ø 25,40/20,64	Alu, -DSC
	99-				**CZ048**	Fte	Ø 22,20	
	99-03				**CZ088**	Fte	Ø 23,81	
	99-				**PZ080**	Fte	Ø 19,05	Pla
	99-				**PZ102**	Fte	Ø 19,05	
520 i Eng.M52B(206S3-206S4) (110kW)	96-8/97				**PF975**	Trw	Ø 19,05	Alu, -DSC
	9/97-00				**PF593**	Trw	Ø 25,40/20,64	Alu, -DSC
	96-00				**PF608**	Trw	Ø 25,40/20,64	Alu, +DSC
	96-00				**CZ048**	Fte	Ø 22,20	
	99-03				**CZ088**	Fte	Ø 23,81	
	96-				**PZ080**	Fte	Ø 19,05	Pla

		Spare Parts	F/R	L/R	FRITECH ref.		DIMENSIONS mm.	NOTE
520 i Eng.M52B(206S3-206S4) (110kW)	96-				**PZ102**	Fte	Ø 19,05	
520 i Eng.M54B22 (125kW)	00-				**PF608**	Trw	Ø 25,40/20,64	Alu, +DSC
	00-03				**PF593**	Trw	Ø 25,40/20,64	Alu, -DSC
	00-				**CZ048**	Fte	Ø 22,20	
	99-03				**CZ088**	Fte	Ø 23,81	
	00-				**PZ080**	Fte	Ø 19,05	Pla
	00-				**PZ102**	Fte	Ø 19,05	
523 i Eng.M52B25(Vanos) (125kW)	95-8/97				**PF975**	Trw	Ø 19,05	Alu, -DSC
	9/97-00				**PF593**	Trw	Ø 25,40/20,64	Alu, -DSC
	95-00				**PF608**	Trw	Ø 25,40/20,64	Alu, +DSC
	95-00				**CZ048**	Fte	Ø 22,20	
	99-03				**CZ088**	Fte	Ø 23,81	
	95-				**PZ080**	Fte	Ø 19,05	Pla
	95-				**PZ102**	Fte	Ø 19,05	
525 D Eng.M57256D1/ M57D25 (120kW)	00-				**PF608**	Trw	Ø 25,40/20,64	Alu, +DSC
	00-03				**PF593**	Trw	Ø 25,40/20,64	Alu, -DSC
	00-				**CZ048**	Fte	Ø 22,20	
	99-03				**CZ088**	Fte	Ø 23,81	
	00-				**PZ080**	Fte	Ø 19,05	Pla
	00-				**PZ102**	Fte	Ø 19,05	
525 i Eng.M54256S5/ M54B25 (141kW)	00-				**PF608**	Trw	Ø 25,40/20,64	Alu, +DSC
	00-03				**PF593**	Trw	Ø 25,40/20,64	Alu, -DSC
	00-				**CZ048**	Fte	Ø 22,20	
	99-03				**CZ088**	Fte	Ø 23,81	
	00-				**PZ080**	Fte	Ø 19,05	Pla
	00-				**PZ102**	Fte	Ø 19,05	
525 tDs Eng.M51D25(Inter.) (105kW)	96-8/97				**PF975**	Trw	Ø 19,05	Alu, -DSC
	9/97-03				**PF593**	Trw	Ø 25,40/20,64	Alu, -DSC
	96-				**CZ048**	Fte	Ø 22,20	
	99-03				**CZ088**	Fte	Ø 23,81	
	96-				**PZ080**	Fte	Ø 19,05	Pla
	96-				**PZ102**	Fte	Ø 19,05	
528 i Eng.M52B28/ M52B28TU (142kW)	95-8/97				**PF975**	Trw	Ø 19,05	Alu, -DSC
	9/97-00				**PF593**	Trw	Ø 25,40/20,64	Alu, -DSC
	95-00				**PF608**	Trw	Ø 25,40/20,64	Alu, +DSC
	95-00				**CZ048**	Fte	Ø 22,20	
	99-03				**CZ088**	Fte	Ø 23,81	
	95-				**PZ080**	Fte	Ø 19,05	Pla
	95-				**PZ102**	Fte	Ø 19,05	
530 D Eng.M57D30 (135kW)	98-00				**PF608**	Trw	Ø 25,40/20,64	Alu, +DSC
	98-00				**PF593**	Trw	Ø 25,40/20,64	Alu, -DSC
	98-00				**CZ048**	Fte	Ø 22,20	
	99-03				**CZ088**	Fte	Ø 23,81	
	98-				**PZ080**	Fte	Ø 19,05	Pla
	98-				**PZ102**	Fte	Ø 19,05	
530 D Eng.M57D30 (142kW)	00-				**PF608**	Trw	Ø 25,40/20,64	Alu, +DSC
	00-				**PF593**	Trw	Ø 25,40/20,64	Alu, -DSC
	00-				**CZ048**	Fte	Ø 22,20	
	99-03				**CZ088**	Fte	Ø 23,81	
	00-				**PZ080**	Fte	Ø 19,05	Pla
	00-				**PZ102**	Fte	Ø 19,05	
530 i Eng.M54306S3/ M54B30 (170kW)	00-				**PF608**	Trw	Ø 25,40/20,64	Alu, +DSC
	00-03				**PF593**	Trw	Ø 25,40/20,64	Alu, -DSC
	00-				**CZ048**	Fte	Ø 22,20	
	99-03				**CZ088**	Fte	Ø 23,81	
	00-				**PZ080**	Fte	Ø 19,05	Pla
	00-				**PZ102**	Fte	Ø 19,05	
540 i Eng.M62B44/ M62B44TU/ M62448S2 (210kW)	96-8/97				**PF975**	Trw	Ø 19,05	Alu, -DSC
	96-				**PF608**	Trw	Ø 25,40/20,64	Alu, +DSC
	96-				**CZ048**	Fte	Ø 22,20	
	99-03				**CZ088**	Fte	Ø 23,81	
	96-				**PZ080**	Fte	Ø 19,05	Pla
	96-				**PZ102**	Fte	Ø 19,05	

BMW

		Spare Parts	F/R	L/R	FRITECH ref.		DIMENSIONS mm.	NOTE
5 V (E60) 7/03-3/10								
5.0 M5 Eng.S85B50A (373kW)	04-09				**PF992**	Trw	Ø 26,99/22,20	Alu
520 D Eng.M47N204D4 (110kW)	05-09				**PF992**	Trw	Ø 26,99/22,20	Alu
520 D Eng.M47N204D5 (120kW)	05-09				**PF992**	Trw	Ø 26,99/22,20	Alu
	05-				**CZ048**	Fte	Ø 22,20	
520 D Eng.N47D20A (130kW)	07-09				**PF992**	Trw	Ø 26,99/22,20	Alu
	6/08-				**CZ118**	Fte	Ø 22,20	
	-6/08				**CZ048**	Fte	Ø 22,20	
520i Eng.M54226S1 (125kW)	03-				**PF629**	Trw	Ø 25,40	Alu
	03-				**CZ048**	Fte	Ø 22,20	
520i Eng.N43B20A (125kW)	07-				**PF629**	Trw	Ø 25,40	Alu
	07-				**CZ048**	Fte	Ø 22,20	
523i Eng.N52B25A (130kW)	05-09				**PF992**	Trw	Ø 26,99/22,20	Alu
	05-				**CZ048**	Fte	Ø 22,20	
523i Eng.N53B25A (140kW)	07-				**PF992**	Trw	Ø 26,99/22,20	Alu
	6/08-				**CZ118**	Fte	Ø 22,20	
	-6/08				**CZ048**	Fte	Ø 22,20	
525 D Eng.M57256D1 (120kW)	04-09				**PF992**	Trw	Ø 26,99/22,20	Alu
	04-				**CZ048**	Fte	Ø 22,20	
525 D, xd Eng.M57256D2/ D4 (130kW)	04-09				**PF992**	Trw	Ø 26,99/22,20	Alu
	04-				**CZ118**	Fte	Ø 22,20	
525 D, xd Eng.M57306D3 (145kW)	07-09				**PF992**	Trw	Ø 26,99/22,20	Alu
	07-				**CZ048**	Fte	Ø 22,20	
525 i, xi Eng.N53B30/ N53B30A (160kW)	07-09				**PF992**	Trw	Ø 26,99/22,20	Alu
	6/08-				**CZ118**	Fte	Ø 22,20	
	-6/08				**CZ048**	Fte	Ø 22,20	
525i Eng.N52B25A (160kW)	05-09				**PF992**	Trw	Ø 26,99/22,20	Alu
	05-				**CZ048**	Fte	Ø 22,20	
525i 24v Eng.M54256S5 (141kW)	03-10				**PF629**	Trw	Ø 25,40	Alu
	03-10				**CZ048**	Fte	Ø 22,20	
525xi Eng.N52B25A (160kW)	05-				**PF992**	Trw	Ø 26,99/22,20	Alu
	6/08-				**CZ118**	Fte	Ø 22,20	
	-6/08				**CZ048**	Fte	Ø 22,20	
530 D, xd Eng.M57306D3 (170kW)	03-09				**PF992**	Trw	Ø 26,99/22,20	Alu
	03-				**CZ048**	Fte	Ø 22,20	
530 D, xd Eng.M57306D3 (173kW)	07-				**PF992**	Trw	Ø 26,99/22,20	Alu
	07-				**CZ048**	Fte	Ø 22,20	
530 D, xd Eng.N57306D2 (160kW)	03-09				**PF992**	Trw	Ø 26,99/22,20	Alu
	03-				**CZ048**	Fte	Ø 22,20	
530i Eng.M54306S3 (170kW)	03-				**PF629**	Trw	Ø 25,40	Alu
	03-				**CZ048**	Fte	Ø 22,20	
530i Eng.N52B30A (190kW)	05-09				**PF992**	Trw	Ø 26,99/22,20	Alu
	05-				**CZ048**	Fte	Ø 22,20	
530i Eng.N52B30A/N52B30B/N52B30BF (200kW)	07-09				**PF992**	Trw	Ø 26,99/22,20	Alu
	6/08-				**CZ118**	Fte	Ø 22,20	
	-6/08				**CZ048**	Fte	Ø 22,20	
530xi Eng.N52B30A (190kW)	05-09				**PF992**	Trw	Ø 26,99/22,20	Alu
	05-				**CZ048**	Fte	Ø 22,20	
530xi, xD Eng.N52B30A (200kW)	07-09				**PF992**	Trw	Ø 26,99/22,20	Alu
	07-6/08				**CZ048**	Fte	Ø 22,20	
	6/08-				**CZ118**	Fte	Ø 22,20	
535 D Eng.M57306D4 (200kW)	04-09				**PF992**	Trw	Ø 26,99/22,20	Alu
535 D Eng.M57N306D5 (210kW)	07-				**PF992**	Trw	Ø 26,99/22,20	Alu
	07-				**CZ048**	Fte	Ø 22,20	
540i Eng.N62B40A (225kW)	05-09				**PF992**	Trw	Ø 26,99/22,20	Alu
	05-				**CZ118**	Fte	Ø 22,20	
545i Eng.N62B44 (245kW)	03-09				**PF992**	Trw	Ø 26,99/22,20	Alu
	03-				**CZ048**	Fte	Ø 22,20	
550i Eng.N62B48B (270kW)	05-09				**PF992**	Trw	Ø 26,99/22,20	Alu
	05-				**CZ118**	Fte	Ø 22,20	
5 V Touring (E61) 7/03-7/09								
5.0 M5 Eng.S85B50A (373kW)	04-				**PF992**	Trw	Ø 26,99/22,20	Alu
	04-				**CZ048**	Fte	Ø 22,20	

		Spare Parts	F/R	L/R	FRITECH ref.		DIMENSIONS mm.	NOTE
520 D Eng.M47N204D4 (110kW)	05-09				**PF992**	Trw	Ø 26,99/22,20	Alu
	05-				**CZ048**	Fte	Ø 22,20	
520 D Eng.M47N204D5 (120kW)	05-09				**PF992**	Trw	Ø 26,99/22,20	Alu
	05-				**CZ048**	Fte	Ø 22,20	
520 D Eng.N47D20A (130kW)	07-09				**PF629**	Trw	Ø 25,40	Alu
	6/08-				**CZ118**	Fte	Ø 22,20	
	-6/08				**CZ048**	Fte	Ø 22,20	
520i Eng.M54226S1 (125kW)	03-				**PF629**	Trw	Ø 25,40	Alu
	03-				**CZ048**	Fte	Ø 22,20	
520i Eng.N43B20A (125kW)	07-				**CZ048**	Fte	Ø 22,20	
523i Eng.N52B25A (130kW)	05-09				**PF629**	Trw	Ø 25,40	Alu
	05-				**CZ048**	Fte	Ø 22,20	
523i Eng.N53B25A (140kW)	07-				**PF992**	Trw	Ø 26,99/22,20	Alu
	07-				**CZ048**	Fte	Ø 22,20	
525 D Eng.M57N256D1 (120kW)	04-09				**PF992**	Trw	Ø 26,99/22,20	Alu
	04-				**CZ048**	Fte	Ø 22,20	
525 D Eng.M57N256D4 (130kW)	04-09				**PF992**	Trw	Ø 26,99/22,20	Alu
	04-				**CZ118**	Fte	Ø 22,20	
525 D, xd Eng.N57306D3 (145kW)	07-09				**PF992**	Trw	Ø 26,99/22,20	Alu
	07-				**CZ048**	Fte	Ø 22,20	
525i Eng.M54256S5 (141kW)	03-				**PF629**	Trw	Ø 25,40	Alu
	03-				**CZ048**	Fte	Ø 22,20	
525i Eng.N52B25A (160kW)	05-09				**PF629**	Trw	Ø 25,40	Alu
	05-				**CZ048**	Fte	Ø 22,20	
525i, xi Eng.N53B30A (160kW)	07-				**PF629**	Trw	Ø 25,40	Alu
	07-				**CZ048**	Fte	Ø 22,20	
525xi Eng.N52B25A (160kW)	05-09				**PF629**	Trw	Ø 25,40	Alu
	05-09				**CZ048**	Fte	Ø 22,20	
530 D Eng.N57306D2 (160kW)	03-09				**PF992**	Trw	Ø 26,99/22,20	Alu
	03-				**CZ048**	Fte	Ø 22,20	
530 D, xd Eng.M57306D3 (170kW)	03-09				**PF992**	Trw	Ø 26,99/22,20	Alu
	03-				**CZ048**	Fte	Ø 22,20	
530 D, xd Eng.M57306D3 (173kW)	07-09				**PF992**	Trw	Ø 26,99/22,20	Alu
	07-				**CZ048**	Fte	Ø 22,20	
530i Eng.M54306S3 (170kW)	03-				**PF629**	Trw	Ø 25,40	Alu
	03-				**CZ048**	Fte	Ø 22,20	
530i Eng.N52B30A (190kW)	05-09				**PF629**	Trw	Ø 25,40	Alu
	05-				**CZ048**	Fte	Ø 22,20	
530i Eng.N52B30A (200kW)	07-09				**PF992**	Trw	Ø 26,99/22,20	Alu
	07-				**CZ048**	Fte	Ø 22,20	
530xi Eng.N52B30A (190kW)	05-09				**PF629**	Trw	Ø 25,40	Alu
	05-				**CZ048**	Fte	Ø 22,20	
530xi, xD Eng.N52B30A (200kW)	07-09				**PF992**	Trw	Ø 26,99/22,20	Alu
	6/08-				**CZ118**	Fte	Ø 22,20	
	-6/08				**CZ048**	Fte	Ø 22,20	
535 D Eng.M57306D4 (200kW)	04-09				**PF992**	Trw	Ø 26,99/22,20	Alu
535 D Eng.M57N306D5 (210kW)	07-09				**PF992**	Trw	Ø 26,99/22,20	Alu
	07-				**CZ048**	Fte	Ø 22,20	
545i Eng.N62B44 (245kW)	03-				**PF992**	Trw	Ø 26,99/22,20	Alu
	03-				**CZ048**	Fte	Ø 22,20	
550i Eng.N62B48B (270kW)	05-09				**PF992**	Trw	Ø 26,99/22,20	Alu
5 VI (F07) GT 8/09-								
520d Eng.N47D20C (135kW)	12-				**PF992**	Trw	Ø 26,99/22,20	Alu
528i Eng.N20B20A (180kW)	13-				**PF992**	Trw	Ø 26,99/22,20	Alu
530d, xd Eng.N57D30 (180kW)	09-				**PF992**	Trw	Ø 26,99/22,20	Alu
530d, xd Eng.N57D30A (190kW)	09-				**PF992**	Trw	Ø 26,99/22,20	Alu
535d, xD Eng.N57D30B (230kW)	12-				**PF992**	Trw	Ø 26,99/22,20	Alu
535d, xd Eng.N57D30B/ N57SD30B (220kW)	10-				**PF992**	Trw	Ø 26,99/22,20	Alu
535i, xd Eng.N55B30A (225kW)	09-				**PF992**	Trw	Ø 26,99/22,20	Alu
550i, xd Eng.N63B44A (300kW)	09-				**PF992**	Trw	Ø 26,99/22,20	Alu
550i, xd Eng.N63B44B (330kW)	12-				**PF992**	Trw	Ø 26,99/22,20	Alu
5 VI (F10, F18) 2/10-								
3.0 Active Hybrid Eng.N55B30A (225kW)	10-				**PF991**	Trw	Ø 26,99/22,20	Alu
	11-				**CZ118**	Fte	Ø 22,20	

BMW

		Spare Parts	F/R	L/R	FRITECH ref.		DIMENSIONS mm.	NOTE
518d Eng.B47D20A (110kW)	14-				**PF991**	Trw	Ø 26,99/22,20	Alu
518d Eng.N47D20C (105kW)	13-				**PF991**	Trw	Ø 26,99/22,20	Alu
	13-				**CZ118**	Fte	Ø 22,20	
520d, xD Eng.B47D20A (140kW)	14-				**PF991**	Trw	Ø 26,99/22,20	Alu
520d, xD Eng.N47D20C (135kW)	10-				**PF991**	Trw	Ø 26,99/22,20	Alu
	10-				**CZ118**	Fte	Ø 22,20	
520i Eng.N20B20A (135kW)	11-				**PF991**	Trw	Ø 26,99/22,20	Alu
	11-				**CZ118**	Fte	Ø 22,20	
523i Eng.N52B25A (150kW)	10-				**PF991**	Trw	Ø 26,99/22,20	Alu
	10-				**CZ118**	Fte	Ø 22,20	
523i Eng.N52B30 (150kW)	10-				**PF991**	Trw	Ø 26,99/22,20	Alu
	10-				**CZ118**	Fte	Ø 22,20	
525d Eng.N57D30A (150kW)	10-				**PF991**	Trw	Ø 26,99/22,20	Alu
	10-				**CZ118**	Fte	Ø 22,20	
525d, xD Eng.N47D20D (160kW)	11-				**PF991**	Trw	Ø 26,99/22,20	Alu
528i Eng.N52B30 (190kW)	10-				**PF991**	Trw	Ø 26,99/22,20	Alu
	10-				**CZ118**	Fte	Ø 22,20	
528i, xD Eng.N20B20A (180kW)	11-				**PF991**	Trw	Ø 26,99/22,20	Alu
	11-				**CZ118**	Fte	Ø 22,20	
530d Eng.N57D30 (180-183kW)	10-				**PF991**	Trw	Ø 26,99/22,20	Alu
	10-				**CZ118**	Fte	Ø 22,20	
530d, xd Eng.N57D30A (190kW)	11-				**PF991**	Trw	Ø 26,99/22,20	Alu
	11-				**CZ118**	Fte	Ø 22,20	
530i Eng.N53B30A (200kW)	11-				**PF991**	Trw	Ø 26,99/22,20	Alu
	11-				**CZ118**	Fte	Ø 22,20	
535d Eng.N57D30B (220kW)	10-				**PF991**	Trw	Ø 26,99/22,20	Alu
535d, xD Eng.N57D30B (230kW)	11-				**PF991**	Trw	Ø 26,99/22,20	Alu
535i, xD Eng.N55B30A (225kW)	10-				**PF991**	Trw	Ø 26,99/22,20	Alu
	10-				**CZ118**	Fte	Ø 22,20	
550i, xd Eng.N63B44A (300kW)	10-				**PF991**	Trw	Ø 26,99/22,20	Alu
550i, xD Eng.N63B44B (330kW)	13-				**PF991**	Trw	Ø 26,99/22,20	Alu
	13-				**CZ118**	Fte	Ø 22,20	
M 550d xD Eng.N57D30C (280kW)	12-				**PF991**	Trw	Ø 26,99/22,20	Alu
5 VI Touring (F11) 6/10-								
518d Eng.B47D20A (110kW)	10-				**PF991**	Trw	Ø 26,99/22,20	Alu
518d Eng.N47D20C (105kW)	13-				**PF991**	Trw	Ø 26,99/22,20	Alu
	13-				**CZ118**	Fte	Ø 22,20	
520d Eng.N47D20C (135kW)	10-				**PF991**	Trw	Ø 26,99/22,20	Alu
	10-				**CZ118**	Fte	Ø 22,20	
520d, xD Eng.B47D20A (140kW)	10-				**PF991**	Trw	Ø 26,99/22,20	Alu
520i Eng.N20B20A (135kW)	11-				**PF991**	Trw	Ø 26,99/22,20	Alu
	11-				**CZ118**	Fte	Ø 22,20	
523i Eng.N52B30A/ N53B30A (150kW)	10-				**PF991**	Trw	Ø 26,99/22,20	Alu
	10-				**CZ118**	Fte	Ø 22,20	
525d Eng.N57D30A (150kW)	10-				**PF991**	Trw	Ø 26,99/22,20	Alu
	10-				**CZ118**	Fte	Ø 22,20	
525d, xD Eng.N47D20D/ B47D20A (155-160kW)	11-				**PF991**	Trw	Ø 26,99/22,20	Alu
	11-				**CZ118**	Fte	Ø 22,20	
528i Eng.N52B30 (190kW)	10-				**PF991**	Trw	Ø 26,99/22,20	Alu
	10-				**CZ118**	Fte	Ø 22,20	
528i, xD Eng.N20N20A (180kW)	11-				**PF991**	Trw	Ø 26,99/22,20	Alu
	11-				**CZ118**	Fte	Ø 22,20	
530d Eng.N57D30A (180kW)	10-				**PF991**	Trw	Ø 26,99/22,20	Alu
	10-				**CZ118**	Fte	Ø 22,20	
530d, xd Eng.N57D30A (190kW)	11-				**PF991**	Trw	Ø 26,99/22,20	Alu
	11-				**CZ118**	Fte	Ø 22,20	
530i Eng.N53B30A (200kW)	11-				**PF991**	Trw	Ø 26,99/22,20	Alu
	11-				**CZ118**	Fte	Ø 22,20	
535d Eng.N57D30B (220kW)	10-				**PF991**	Trw	Ø 26,99/22,20	Alu
535d, xD Eng.N57D30B (230kW)	11-				**PF991**	Trw	Ø 26,99/22,20	Alu
535i, xD Eng.N55B30A (225kW)	10-				**PF991**	Trw	Ø 26,99/22,20	Alu
	10-				**CZ118**	Fte	Ø 22,20	
550i Eng.N63B44A (300kW)	11-				**PF991**	Trw	Ø 26,99/22,20	Alu

		Spare Parts	F/R	L/R	FRITECH ref.		DIMENSIONS mm.	NOTE
550i Eng.N63B44B (330kW)	13-				**PF991**	Trw	Ø 26,99/22,20	Alu
	13-				**CZ118**	Fte	Ø 22,20	
M 550d xD Eng.N57D30C (280kW)	12-				**PF991**	Trw	Ø 26,99/22,20	Alu
6 I (E24) 4/76-9/90								
628 CSi Eng.M30B28(L-Jetronic) (135kW)	9/79-87				**CZ013**		Ø 20,64	
	82-87				**PZ050**		Ø 19,05	Alu
	9/79-4/82				**PZ020**		Ø 19,05	
630 CS Eng.M30B30(4A1) (136kW)	2/76-79				**CZ013**		Ø 20,64	
	2/76-8/79				**PZ020**		Ø 19,05	
633 CSi Eng.M30B32(L-Jetronic) (147kW)	1/76-78				**CZ013**		Ø 20,64	
	1/76-78				**PZ020**		Ø 19,05	
633 CSi Eng.M30B32(L-Jetronic/ 9:1) (145kW)	78-84				**CZ013**		Ø 20,64	
	78-84				**PZ020**		Ø 19,05	
635 CSi Eng.M30B35(L-Jetronic/ 10:1) (160kW)	6/78-88				**CZ013**		Ø 20,64	
	6/78-88				**PZ020**		Ø 19,05	
	82-88				**PZ050**		Ø 19,05	Alu
635 CSi Eng.M30B35(Motronic/ Kat.) (136-155kW)	6/78-4/89				**CZ013**		Ø 20,64	
	82-87				**PZ050**		Ø 19,05	Alu
M 635 CSi Eng.S38B35 (211kW)	84-89				**PZ050**		Ø 19,05	Alu
6 II (E63, E64), Cabrio 1/04-1/11								
630i Eng.N52B30A (190kW)	04-				**PF992**	Trw	Ø 26,99/22,20	Alu
	6/08-				**CZ118**	Fte	Ø 22,20	
	-6/08				**CZ048**	Fte	Ø 22,20	
630i Eng.N53B30/N52B30A/N52B30B/N52B30BF (200kW)	07-				**PF992**	Trw	Ø 26,99/22,20	Alu
	6/08-				**CZ118**	Fte	Ø 22,20	
	-6/08				**CZ048**	Fte	Ø 22,20	
635 D Eng.M57N306D5 (210kW)	07-11				**PF992**	Trw	Ø 26,99/22,20	Alu
	07-				**CZ048**	Fte	Ø 22,20	
645Ci Eng.N62B44A/ N62B44 (245kW)	04-				**PF992**	Trw	Ø 26,99/22,20	Alu
	04-				**CZ048**	Fte	Ø 22,20	
650i Eng.N62B48B (270kW)	05-11				**PF992**	Trw	Ø 26,99/22,20	Alu
	-5/08				**CZ048**	Fte	Ø 22,20	
	6/08-				**CZ118**	Fte	Ø 22,20	
M6 Eng.S85B50A (373kW)	05-				**PF992**	Trw	Ø 26,99/22,20	Alu
6 III (F12,F13,F06) Cabrio, Coupe, GC 2/11-								
640d, xD Eng.N57D30B (230kW)	11-				**PF991**	Trw	Ø 26,99/22,20	Alu
640i, xD Eng.N55B30A (235kW)	11-				**PF991**	Trw	Ø 26,99/22,20	Alu
650i, xD Eng.N63B44A (300kW)	11-				**PF991**	Trw	Ø 26,99/22,20	Alu
650i, xD Eng.N63B44B (330kW)	12-				**PF991**	Trw	Ø 26,99/22,20	Alu
7 I (E23) 5/77-8/86								
728 Eng.M30B28 (125kW)	3/77-79				**PZ020**		Ø 19,05	
728 i Eng.M30B28(L-Jetronic) (135kW)	78-7/86				**PZ020**		Ø 19,05	
730 Eng.M30B30(4A1) (135kW)	3/77-79				**PZ020**		Ø 19,05	
732 i/733 i Eng.M30B32(Motronic/ 10:1) (145kW)	3/77-7/86				**PZ020**		Ø 19,05	
735 i Eng.M30B35(Motronic) (141-160kW)	3/77-7/86				**PZ020**		Ø 19,05	
735 i Eng.M30B35(Motronic/ 8:1/ Kat.) (136kW)	3/77-7/86				**PZ020**		Ø 19,05	
745 i Eng.M30B32(Turbo/ 8:1) (185kW)	80-83				**PZ020**		Ø 19,05	
745 i Eng.M30B35 (185kW)	83-7/86				**PZ020**		Ø 19,05	
7 II (E32) 9/86-9/94								
730 i,iL Eng.M30B30 (145kW)	86-94				**PF326**	Trw	Ø 25,40	Alu
730 i,iL Eng.M30B30(Kat.) (138kW)	86-94				**PF326**	Trw	Ø 25,40	Alu
730 i,iL V8 Eng.M60B30 (160kW)	92-94				**CZ048**	Fte	Ø 22,20	
735 i,iL Eng.M30B35(Motronic/ 9:1/ Kat.) (155kW)	86-92				**PF326**	Trw	Ø 25,40	Alu
7 III (E38) 10/94-11/01								
725 TDs Eng.M51D25(Inter.) (105kW)	96-8/97				**PF975**	Trw	Ø 19,05	Alu, -DSC
	9/97-9/98				**PF593**	Trw	Ø 25,40/20,64	Alu, -DSC
	96-01				**PF608**	Trw	Ø 25,40/20,64	Alu, +DSC
	96-01				**CZ048**	Fte	Ø 22,20	
728 i,iL, iX Eng.M52B28 (142kW)	95-8/97				**PF975**	Trw	Ø 19,05	Alu, -DSC
	9/97-9/98				**PF593**	Trw	Ø 25,40/20,64	Alu, -DSC
	96-01				**PF608**	Trw	Ø 25,40/20,64	Alu, +DSC
	95-01				**CZ048**	Fte	Ø 22,20	

BMW

		Spare Parts	F/R	L/R	FRITECH ref.		DIMENSIONS mm.	NOTE
730 D Eng.M57306D1 (142kW)	00-01				**PF608**	Trw	Ø 25,40/20,64	Alu, +DSC
	00-01				**PF593**	Trw	Ø 25,40/20,64	Alu, -DSC
730 D Eng.M57D30 (135kW)	98-00				**PF608**	Trw	Ø 25,40/20,64	Alu, +DSC
	98-00				**PF593**	Trw	Ø 25,40/20,64	Alu, -DSC
730 i,iL Eng.M60B30 (155-160kW)	94-8/97				**PF975**	Trw	Ø 19,05	Alu, -DSC
	9/97-9/98				**PF593**	Trw	Ø 25,40/20,64	Alu, -DSC
	96-01				**PF608**	Trw	Ø 25,40/20,64	Alu, +DSC
	94-01				**CZ048**	Fte	Ø 22,20	
735 i,iL Eng.M62B(358S1) (173kW)	96-8/97				**PF975**	Trw	Ø 19,05	Alu, -DSC
	9/97-9/98				**PF593**	Trw	Ø 25,40/20,64	Alu, -DSC
	96-01				**PF608**	Trw	Ø 25,40/20,64	Alu, +DSC
	96-01				**CZ048**	Fte	Ø 22,20	
740 D Eng.M67D39 (180kW)	99-01				**PF608**	Trw	Ø 25,40/20,64	Alu, +DSC
	99-01				**PF593**	Trw	Ø 25,40/20,64	Alu, -DSC
740 i,iL Eng.M60B40 (210kW)	94-8/97				**PF975**	Trw	Ø 19,05	Alu, -DSC
	9/97-9/98				**PF593**	Trw	Ø 25,40/20,64	Alu, -DSC
	94-01				**PF608**	Trw	Ø 25,40/20,64	Alu, +DSC
	94-01				**CZ048**	Fte	Ø 22,20	
740 i,iL Eng.M62B44 (210kW)	96-8/97				**PF975**	Trw	Ø 19,05	Alu, -DSC
	9/97-9/98				**PF593**	Trw	Ø 25,40/20,64	Alu, -DSC
	96-01				**PF608**	Trw	Ø 25,40/20,64	Alu, +DSC
	96-01				**CZ048**	Fte	Ø 22,20	
750 i,iL Eng.M73B54 (240kW)	94-8/97				**PF975**	Trw	Ø 19,05	Alu, -DSC
	9/97-9/98				**PF593**	Trw	Ø 25,40/20,64	Alu, -DSC
	94-01				**PF608**	Trw	Ø 25,40/20,64	Alu, +DSC
7 IV (E65, E66) 11/01-12/08								
730 i,Li Eng.M54306S3 (170kW)	03-08				**PF976**	Trw	Ø 26,99/20,64	Alu
730 LD Eng.M54B30 (170kW)	05-08				**PF976**	Trw	Ø 26,99/20,64	Alu
730d Eng.M57306D2 (160kW)	02-08				**PF976**	Trw	Ø 26,99/20,64	Alu
730i, Li Eng.N52B30A (190kW)	05-08				**PF976**	Trw	Ø 26,99/20,64	Alu
740 D Eng.N67398D1 (190kW)	02-08				**PF976**	Trw	Ø 26,99/20,64	Alu
740 i,Li Eng.N62B40A (225kW)	05-08				**PF976**	Trw	Ø 26,99/20,64	Alu
745 D Eng.N67N448D1 (220kW)	-8/05				**PF976**	Trw	Ø 26,99/20,64	Alu
745 D Eng.N67N448D2 (242kW)	05-08				**PF976**	Trw	Ø 26,99/20,64	Alu
760 Eng.N73B60A (320kW)	03-05				**PF976**	Trw	Ø 26,99/20,64	Alu
760 i,Li Eng.N73B60N73B60A (327kW)	03-08				**PF976**	Trw	Ø 26,99/20,64	Alu
7 V (F01, F02, F03, F04) 10/08-8/15								
730d Eng.N57D30 (180kW)	08-				**PF992**	Trw	Ø 26,99/22,20	Alu
740d, xd Eng.N57SD30B (225kW)	09-				**PF992**	Trw	Ø 26,99/22,20	Alu
740i Eng.N54B30T0 (240kW)	08-				**PF992**	Trw	Ø 26,99/22,20	Alu
750i Eng.N63B44 (300kW)	08-				**PF992**	Trw	Ø 26,99/22,20	Alu
760i Eng.N74B60 (400kW)	09-				**PF992**	Trw	Ø 26,99/22,20	Alu
M5 10/84-12/87								
All models	10/84-12/87				**CZ013**		Ø 20,64	
X1 I (E84) 9/09-8/15								
16d Eng.N47D20C (85kW)	12-				**PF890**	Ate	Ø 25,40/22,20	Alu
	12-				**CZ118**	Fte	Ø 22,20	
	09-				**PZ080**	Fte	Ø 19,05	Pla
	09-				**PZ102**	Fte	Ø 19,05	
18d, xD Eng.N47D20A/ C (105kW)	09-				**PF890**	Ate	Ø 25,40/22,20	Alu
	09-				**CZ118**	Fte	Ø 22,20	
	09-				**PZ080**	Fte	Ø 19,05	Pla
	09-				**PZ102**	Fte	Ø 19,05	
18d, xd Eng.N47D20C (100kW)	10-				**PF890**	Ate	Ø 25,40/22,20	Alu
18i Eng.N46B20B (110kW)	09-				**PF890**	Ate	Ø 25,40/22,20	Alu
	09-				**CZ118**	Fte	Ø 22,20	
	09-				**PZ080**	Fte	Ø 19,05	Pla
	09-				**PZ102**	Fte	Ø 19,05	
20d Eng.N47D20C (130kW)	09-				**PF890**	Ate	Ø 25,40/22,20	Alu
	09-				**CZ118**	Fte	Ø 22,20	
	09-				**PZ080**	Fte	Ø 19,05	Pla
	09-				**PZ102**	Fte	Ø 19,05	
20d, xd Eng.N47D20C (120kW)	10-				**PF890**	Ate	Ø 25,40/22,20	Alu
	10-				**CZ118**	Fte	Ø 22,20	

		Spare Parts	F/R	L/R	FRITECH ref.		DIMENSIONS mm.	NOTE
20d, xd Eng.N47D20C (120kW)	10-				**PZ080**	Fte	Ø 19,05	Pla
	10-				**PZ102**	Fte	Ø 19,05	
20d, xD Eng.N47D20C (135kW)	12-				**PF890**	Ate	Ø 25,40/22,20	Alu
	12-				**CZ118**	Fte	Ø 22,20	
	12-				**PZ080**	Fte	Ø 19,05	Pla
	12-				**PZ102**	Fte	Ø 19,05	
20i Eng.N20B20A (135kW)	11-				**PF890**	Ate	Ø 25,40/22,20	Alu
	11-				**CZ118**	Fte	Ø 22,20	
	11-				**PZ080**	Fte	Ø 19,05	Pla
	11-				**PZ102**	Fte	Ø 19,05	
23dA Eng.N47D20D (150kW)	09-				**PF890**	Ate	Ø 25,40/22,20	Alu
	09-				**CZ118**	Fte	Ø 22,20	
	09-				**PZ080**	Fte	Ø 19,05	Pla
	09-				**PZ102**	Fte	Ø 19,05	
25dA Eng.N47D20D (160kW)	12-				**PF890**	Ate	Ø 25,40/22,20	Alu
	12-				**CZ118**	Fte	Ø 22,20	
	12-				**PZ080**	Fte	Ø 19,05	Pla
	12-				**PZ102**	Fte	Ø 19,05	
25iA, xd Eng.N52B30A (160kW)	10-				**PF890**	Ate	Ø 25,40/22,20	Alu
	10-				**CZ118**	Fte	Ø 22,20	
	10-				**PZ080**	Fte	Ø 19,05	Pla
	10-				**PZ102**	Fte	Ø 19,05	
28iA Eng.N52B30A (190kW)	09-				**PF890**	Ate	Ø 25,40/22,20	Alu
	09-				**CZ118**	Fte	Ø 22,20	
	09-				**PZ080**	Fte	Ø 19,05	Pla
	09-				**PZ102**	Fte	Ø 19,05	
28iA, xDrive Eng.N20B20A (180kW)	11-				**PF890**	Ate	Ø 25,40/22,20	Alu
	11-				**CZ118**	Fte	Ø 22,20	
	11-				**PZ080**	Fte	Ø 19,05	Pla
	11-				**PZ102**	Fte	Ø 19,05	
X3 I (E83) 1/04-9/10								
1.8 D Eng.N47D20A (105kW)	09-				**PF629**	Trw	Ø 25,40	Alu
	09-				**CZ118**	Fte	Ø 22,20	
2.0 D Eng.M47N204D4 (110kW)	04-				**PF629**	Trw	Ø 25,40	Alu
	04-				**CZ073**	Fte	Ø 22,20	Alu
	04-				**PZ080**	Fte	Ø 19,05	Pla
	04-				**PZ102**	Fte	Ø 19,05	
2.0 D Eng.M47N204D4 (130kW)	07-				**PF629**	Trw	Ø 25,40	Alu
	07-				**CZ118**	Fte	Ø 22,20	
2.0 i Eng.N46B20A (110kW)	05-				**PF629**	Trw	Ø 25,40	Alu
	05-				**CZ073**	Fte	Ø 22,20	Alu
	05-				**PZ080**	Fte	Ø 19,05	Pla
	05-				**PZ102**	Fte	Ø 19,05	
2.5 Eng.M54256S5 (141kW)	04-				**PF629**	Trw	Ø 25,40	Alu
	04-				**CZ073**	Fte	Ø 22,20	Alu
	04-				**PZ080**	Fte	Ø 19,05	Pla
	04-				**PZ102**	Fte	Ø 19,05	
2.5si Eng.N52B25A (160kW)	06-				**PF629**	Trw	Ø 25,40	Alu
	06-				**CZ073**	Fte	Ø 22,20	Alu
	06-				**PZ080**	Fte	Ø 19,05	Pla
	06-				**PZ102**	Fte	Ø 19,05	
3.0 Eng.M54306S3 (170kW)	04-				**PF629**	Trw	Ø 25,40	Alu
	04-				**CZ073**	Fte	Ø 22,20	Alu
	04-				**PZ080**	Fte	Ø 19,05	Pla
	04-				**PZ102**	Fte	Ø 19,05	
3.0 D Eng.M57D306D3 (160kW)	04-				**PF629**	Trw	Ø 25,40	Alu
	04-				**CZ073**	Fte	Ø 22,20	Alu
	04-				**PZ080**	Fte	Ø 19,05	Pla
	04-				**PZ102**	Fte	Ø 19,05	
3.0 D Eng.M57N306D2 (150kW)	04-				**PF629**	Trw	Ø 25,40	Alu
	04-				**CZ073**	Fte	Ø 22,20	Alu
	04-				**PZ080**	Fte	Ø 19,05	Pla
	04-				**PZ102**	Fte	Ø 19,05	

BMW

		Spare Parts	F/R	L/R	FRITECH ref.		DIMENSIONS mm.	NOTE
3.0 sD Eng.M57D306D5 (210kW)	06-				**PF629**	Trw	Ø 25,40	Alu
	06-				**CZ073**	Fte	Ø 22,20	Alu
	06-				**PZ080**	Fte	Ø 19,05	Pla
	06-				**PZ102**	Fte	Ø 19,05	
3.0si Eng.N52B30A (200kW)	06-				**PF629**	Trw	Ø 25,40	Alu
	06-				**CZ073**	Fte	Ø 22,20	Alu
	06-				**PZ080**	Fte	Ø 19,05	Pla
	06-				**PZ102**	Fte	Ø 19,05	
X3 II (F25) 10/10-								
18d sD Eng.N47D20C (110kW)	14-				**CZ118**	Fte	Ø 22,20	
18d, sD Eng.N47D20C (100-105kW)	12-				**CZ118**	Fte	Ø 22,20	
20d Eng.N47D20C (135kW)	10-				**CZ118**	Fte	Ø 22,20	
20i sD, xD Eng.N20B20A (135kW)	11-				**CZ118**	Fte	Ø 22,20	
X5 I (E53) 5/00-12/06								
3.0 D Eng.M57306D1 (135kW)	5/01-9/01				**PF608**	Trw	Ø 25,40/20,64	Alu, +DSC
	01-03				**CZ048**	Fte	Ø 22,20	
	5/01-				**PZ080**	Fte	Ø 19,05	Pla
	5/01-				**PZ102**	Fte	Ø 19,05	
3.0 D Eng.M57N306D4 (160kW)	03-				**PF594**	Trw	Ø 25,40/22,20	Alu, +DSC
	03-06				**CZ048**	Fte	Ø 22,20	
	03-				**PZ080**	Fte	Ø 19,05	Pla
	03-				**PZ102**	Fte	Ø 19,05	
3.0 i Eng.M54306S3 (163kW)	00-9/01				**PF608**	Trw	Ø 25,40/20,64	Alu, +DSC
	9/01-				**PF594**	Trw	Ø 25,40/22,20	Alu, +DSC
	00-06				**CZ048**	Fte	Ø 22,20	
	00-				**PZ080**	Fte	Ø 19,05	Pla
	00-				**PZ102**	Fte	Ø 19,05	
3.0 i Eng.M54306S3 (170kW)	00-9/01				**PF608**	Trw	Ø 25,40/20,64	Alu, +DSC
	9/01-				**PF594**	Trw	Ø 25,40/22,20	Alu, +DSC
	00-06				**CZ048**	Fte	Ø 22,20	
	00-				**PZ080**	Fte	Ø 19,05	Pla
	00-				**PZ102**	Fte	Ø 19,05	
4.4 i Eng.M62B44 (210kW)	00-9/01				**PF608**	Trw	Ø 25,40/20,64	Alu, +DSC
	9/01-				**PF594**	Trw	Ø 25,40/22,20	Alu, +DSC
4.4 i Eng.N62B44A (235kW)	03-				**PF594**	Trw	Ø 25,40/22,20	Alu, +DSC
Z1 6/88-6/91								
2.5 Eng.M20B25(Kat.) (125kW)	7/88-6/91				**CZ013**		Ø 20,64	
Z3 (E36) 10/95-1/03								
1.8 Eng.M43B18 (85kW)	1/96-8/98				**PF283**	Ate	Ø 23,81/20,64	Alu, +ABS, -ASC
	1/96-8/98				**CZ027**	Fte	Ø 20,64	Alu
	1/96-8/98				**CZ095**	Fte	Ø 20,64	
	1/96-8/98				**PZ081**	Fte	Ø 19,05	Pla
	1/96-8/98				**PZ101**	Fte	Ø 19,05	Alu
	5/97-98				**PZ087**	Fte	Ø 19,05	
1.9 Eng.M43194E1 (85kW)	99-				**PF283**	Ate	Ø 23,81/20,64	Alu, +ABS, -ASC
	99-				**CZ027**	Fte	Ø 20,64	Alu
	99-				**CZ095**	Fte	Ø 20,64	
	99-03				**CZ048**	Fte	Ø 22,20	
	99-				**PZ081**	Fte	Ø 19,05	Pla
	99-				**PZ101**	Fte	Ø 19,05	Alu
	99-03				**PZ087**	Fte	Ø 19,05	
1.9 Eng.M43B19 (87kW)	98-				**PF283**	Ate	Ø 23,81/20,64	Alu, +ABS, -ASC
	98-				**CZ027**	Fte	Ø 20,64	Alu
	98-				**CZ095**	Fte	Ø 20,64	
	98-03				**CZ048**	Fte	Ø 22,20	
	98-				**PZ081**	Fte	Ø 19,05	Pla
	98-				**PZ101**	Fte	Ø 19,05	Alu
	98-03				**PZ087**	Fte	Ø 19,05	
1.9 Eng.M44B19 (103kW)	1/96-				**PF283**	Ate	Ø 23,81/20,64	Alu, +ABS, -ASC
	1/96-3/99				**CZ027**	Fte	Ø 20,64	Alu
	1/96-3/99				**CZ095**	Fte	Ø 20,64	
	1/96-3/99				**PZ081**	Fte	Ø 19,05	Pla
	1/96-3/99				**PZ101**	Fte	Ø 19,05	Alu
	5/97-99				**PZ087**	Fte	Ø 19,05	

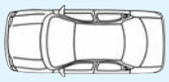		Spare Parts	F/R	L/R	FRITECH ref.		DIMENSIONS mm.	NOTE
2.0 Eng.M52B(206S3)Vanos (110kW)	4/99-				**PF283**	Ate	Ø 23,81/20,64	Alu, +ABS, -ASC
	99-03				**CZ048**	Fte	Ø 22,20	
	99-03				**PZ087**	Fte	Ø 19,05	
2.2 Eng.M54226S1/ M54B22 (125kW)	8/00-				**PF283**	Ate	Ø 23,81/20,64	Alu, +ABS, -ASC
	00-03				**CZ048**	Fte	Ø 22,20	
	00-03				**PZ087**	Fte	Ø 19,05	
2.8, Coupe Eng.M52B28 (141kW)	4/97-6/00				**PF283**	Ate	Ø 23,81/20,64	Alu, +ABS, -ASC
	4/97-6/00				**CZ027**	Fte	Ø 20,64	Alu
	4/97-6/00				**CZ095**	Fte	Ø 20,64	
	1/99-00				**CZ048**	Fte	Ø 22,20	
	4/97-6/00				**PZ081**	Fte	Ø 19,05	Pla
	4/97-6/00				**PZ101**	Fte	Ø 19,05	Alu
	5/97-00				**PZ087**	Fte	Ø 19,05	
3.0, Coupe Eng.M54306S3 (170kW)	00-				**PF283**	Ate	Ø 23,81/20,64	Alu, +ABS, -ASC
	00-03				**CZ048**	Fte	Ø 22,20	
	00-03				**PZ087**	Fte	Ø 19,05	
M3 3.2, Coupe Eng.S50B32 (236kW)	97-01				**PF327**	Trw	Ø 25,40	Alu
	97-01				**CZ048**	Fte	Ø 22,20	
	5/97-01				**PZ087**	Fte	Ø 19,05	
	97-02				**PZ081**	Fte	Ø 19,05	Pla
	97-02				**PZ101**	Fte	Ø 19,05	Alu
M3 3.2, Coupe Eng.S54B32(326S4) (239kW)	01-03				**CZ048**	Fte	Ø 22,20	
	01-03				**PZ087**	Fte	Ø 19,05	
Z4 I (E85, 86) 2/03-2/09								
2.0 i Eng.N46B20A (110kW)	3/07-				**PF906**	Ate	Ø 23,81/22,20	Alu, +DSC
	05-				**CZ073**	Fte	Ø 22,20	Alu
	05-				**PZ080**	Fte	Ø 19,05	Pla
	05-				**PZ102**	Fte	Ø 19,05	
2.2 i Eng.M54226S1 (125kW)	03-				**PF906**	Ate	Ø 23,81/22,20	Alu, +DSC
	03-				**CZ073**	Fte	Ø 22,20	Alu
	03-				**PZ080**	Fte	Ø 19,05	Pla
	03-				**PZ102**	Fte	Ø 19,05	
2.5 i Eng.M54256S5 (141kW)	03-09				**PF906**	Ate	Ø 23,81/22,20	Alu, +DSC
	03-09				**CZ073**	Fte	Ø 22,20	Alu
	03-09				**PZ080**	Fte	Ø 19,05	Pla
	03-09				**PZ102**	Fte	Ø 19,05	
2.5 i Eng.N52B25A (130kW)	06-				**PF906**	Ate	Ø 23,81/22,20	Alu, +DSC
	06-				**CZ073**	Fte	Ø 22,20	Alu
	06-				**PZ080**	Fte	Ø 19,05	Pla
	06-				**PZ102**	Fte	Ø 19,05	
2.5 si Eng.N52B25A (160kW)	06-				**PF906**	Ate	Ø 23,81/22,20	Alu, +DSC
	06-				**CZ073**	Fte	Ø 22,20	Alu
	06-				**PZ080**	Fte	Ø 19,05	Pla
	06-				**PZ102**	Fte	Ø 19,05	
3.0 i Eng.M54306S3 (170kW)	03-09				**PF906**	Ate	Ø 23,81/22,20	Alu, +DSC
	03-09				**CZ073**	Fte	Ø 22,20	Alu
	03-09				**PZ080**	Fte	Ø 19,05	Pla
	03-09				**PZ102**	Fte	Ø 19,05	
3.0 si, Coupe Eng.N52B30A (195kW)	06-				**PF906**	Ate	Ø 23,81/22,20	Alu, +DSC
	06-				**CZ073**	Fte	Ø 22,20	Alu
	06-				**PZ080**	Fte	Ø 19,05	Pla
	06-				**PZ102**	Fte	Ø 19,05	
Z4 II (E89) 3/09-								
18i Eng.N20B20A (115kW)	13-				**CZ118**	Fte	Ø 22,20	
	13-				**PZ080**	Fte	Ø 19,05	Pla
	13-				**PZ102**	Fte	Ø 19,05	
20i Eng.N20B20A (135kW)	11-				**CZ118**	Fte	Ø 22,20	
23i Eng.N52B25 (150kW)	09-				**CZ118**	Fte	Ø 22,20	
28i Eng.N20B20A (180kW)	11-				**CZ118**	Fte	Ø 22,20	
	11-				**PZ080**	Fte	Ø 19,05	Pla
	11-				**PZ102**	Fte	Ø 19,05	
30i Eng.N52B30 (190kW)	09-				**CZ118**	Fte	Ø 22,20	
35i Eng.N54B30 (225kW)	09-				**CZ118**	Fte	Ø 22,20	

BMW

		Spare Parts	F/R	L/R	FRITECH ref.		DIMENSIONS mm.	NOTE
Z8 (E36) 6/00-6/03								
5.0 Eng.S38B49 (294kW)	00-03				**CZ048**	Fte	Ø 22,20	
	00-03				**PZ080**	Fte	Ø 19,05	Pla
	00-03				**PZ102**	Fte	Ø 19,05	

BUICK

Buick								
All models	86-89		R		**CF933**		Ø 22,00	FWD
	71-85		R		**CF931**		Ø 23,81	Exc. SW
	71-96		R		**CF932**		Ø 25,40	SW, RWD
Century								
All models	1/82-12/82		R		**CF930**		Ø 15,87	
	88-92		R		**CF952**		Ø 17,46	Exc. SW
	78-81		R		**CF928**		Ø 19,05	
	82-87		R		**CF937**		Ø 19,05	
	88-92		R		**CF784**		Ø 19,05	SW, HDB
	88-92		R		**CF951**		Ø 20,64	SW, FR
	1/93-12/93		R		**CF933**		Ø 22,00	FWD
	94-00		R		**CF944**		Ø 22,20	
	73-77		R		**CF931**		Ø 23,81	
Electra								
All models	85-86		R		**CF937**		Ø 19,05	
	87-90		R		**CF944**		Ø 22,20	
	72-85		R		**CF931**		Ø 23,81	
	71-89		R		**CF932**		Ø 25,40	
Estate Wagon								
All models	1/91-12/96		R		**CF933**		Ø 22,00	FWD
	71-85		R		**CF931**		Ø 23,81	
	71-89		R		**CF932**		Ø 25,40	
Gransport								
All models	1/66-12/66		R		**CF945**		Ø 23,81	
Le Sabre								
All models	1/91-12/96		R		**CF933**		Ø 22,00	FWD
	86-99		R		**CF944**		Ø 22,20	
	71-85		R		**CF931**		Ø 23,81	
	71-89		R		**CF932**		Ø 25,40	
Park Avenue 1/91-10/96								
All models	1/91-12/96		R		**CF933**		Ø 22,00	FWD
	87-97		R		**CF944**		Ø 22,20	
	71-85		R		**CF931**		Ø 23,81	
	91-93		R		**CF957**		Ø 23,81	
	71-89		R		**CF932**		Ø 25,40	
Regal								
All models	78-87		R		**CF928**		Ø 19,05	
	74-77		R		**CF931**		Ø 23,81	SW
Riviera 1/97-12/99								
All models	79-85		R		**CF946**		Ø 19,05	
	71-78		R		**CF932**		Ø 25,40	
Saturn L								
All models			R		**CF320**		Ø 20,64	Alu
Skyhawk I								
All models	82-87		R		**CF930**		Ø 15,87	Exc. SW
	82-86		R		**CF927**		Ø 17,46	SW
	85-87		R		**CF952**		Ø 17,46	Second Design, SW
Skyhawk II								
All models	87-89		R		**CF940**		Ø 15,80	
Skyhawk III								
All models	91-98		R		**CF952**		Ø 17,46	
Skylark								
All models	80-85		R		**CF927**		Ø 17,46	SW
	65-79		R		**CF945**		Ø 23,81	
Somerset I								
All models	85-87		R		**CF930**		Ø 15,87	

BUICK

		Spare Parts	F/R	L/R	FRITECH ref.		DIMENSIONS mm.	NOTE
Somerset II								
All models	87-90		R		**CF940**		Ø 15,80	Exc. Performance package
Special								
All models	64-67		R		**CF945**		Ø 23,81	

CADILLAC

Calais								
All models	76-96		R		**CF932**		Ø 25,40	Exc. Limousine, +ABS, RWD, 11Inch Brake
	85-86		R		**CF937**		Ø 19,05	FWD
	87-91		R		**CF933**		Ø 22,00	FWD
	71-90		R		**CF931**		Ø 23,81	RWD, 12Inch Brake
	91-92		R		**CF957**		Ø 23,81	
Cimarron I								
All models	82-87		R		**CF930**		Ø 15,87	
Cimarron II								
All models	87-88		R		**CF940**		Ø 15,80	
Commercial Chassis								
All models	69-84		R		**CF931**		Ø 23,81	
	71-76		R		**CF932**		Ø 25,40	
Deville - Concours								
All models	87-90		R		**CF944**		Ø 22,20	
	90-93		R		**CF953**		Ø 22,20	+Servo
	97-99		R		**CF954**		Ø 23,81	
Eldorado								
All models	67-70		R		**CF953**		Ø 22,20	
	71-75		R		**CF931**		Ø 23,81	
Fleetwood								
75	69-70		R		**CF953**		Ø 22,20	
	91-96		R		**CF959**		Ø 25,40	11,15Inch Brake
All models	87-91		R		**CF944**		Ø 22,20	+ABS
	90-92		R		**CF953**		Ø 22,20	HDB
Seville								
All models	1/76-12/76		R		**CF931**		Ø 23,81	

CADILLAC TRUCK

Escalade								
All models	99-00		R		**CF959**		Ø 25,40	

CESAB (CARELLI ELEVATORI)

KD 20, 25								
-			R		**CF967**		Ø 25,40	

CHEVROLET

Aveo I 5/05-4/08								
1.2 Eng.F12S3 (53kW)	06-		R		**CF074**		Ø 19,05	
1.4 16v Eng.F14D3 (69kW)	06-		R		**CF074**		Ø 19,05	
Aveo II (T200, 250) 1/06-2/11								
1.2 Eng.F12D4/ B12D1 (62kW)	08-		R		**CF074**		Ø 19,05	
1.2 LPG Eng.B12D1 (62kW)	08-11		R		**CF074**		Ø 19,05	
1.4 Eng.F14D4 (74kW)	08-		R		**CF074**		Ø 19,05	
Aveo III (T300) 3/11-								
1.2 Eng.A12XEL (51kW)	11-		R		**CF1003**		Ø 19,05	Alu, 14Inch Wheels
	11-		R		**CF903**		Ø 20,64	Alu, 15Inch Wheels
1.2 Eng.A12XER (63kW)	11-		R		**CF1003**		Ø 19,05	Alu, 14Inch Wheels
	11-		R		**CF903**		Ø 20,64	Alu, 15Inch Wheels
1.2 GPL Eng.A12XER (63kW)	12-		R		**CF1003**		Ø 19,05	Alu, 14Inch Wheels
	12-		R		**CF903**		Ø 20,64	Alu, 15Inch Wheels
1.3 D Eng.LDV (55kW)	11-		R		**CF1003**		Ø 19,05	Alu, 14Inch Wheels
	11-		R		**CF903**		Ø 20,64	Alu, 15Inch Wheels
1.3 D Eng.LSF (70kW)	11-		R		**CF1003**		Ø 19,05	Alu, 14Inch Wheels
	11-		R		**CF903**		Ø 20,64	Alu, 15Inch Wheels
1.4 Eng.A14XER (74kW)	11-		R		**CF1003**		Ø 19,05	Alu, 14Inch Wheels
	11-		R		**CF903**		Ø 20,64	Alu, 15Inch Wheels

CHEVROLET

		Spare Parts	F/R	L/R	FRITECH ref.		DIMENSIONS mm.	NOTE
1.4 T Eng.LUJ (103kW)	11-		R		**CF903**		Ø 20,64	Alu, 15Inch Wheels
1.6 Eng.F16D4 (85kW)	11-		R		**CF1003**		Ø 19,05	Alu, 14Inch Wheels
	11-		R		**CF903**		Ø 20,64	Alu, 15Inch Wheels
Cruze,SW (J300/305/308) 5/09-								
1.4 SW Eng.A14NEL / LUJ (103kW)	12-				**PF941**	Ate	Ø 25,40	Alu, A/T
1.6 Eng.F16D3 /LXT (80kW)	09-				**PF941**	Ate	Ø 25,40	Alu, A/T
1.6 LS Eng.F16D4/ LXV (83kW)	09-		R		**CF903**		Ø 20,64	Alu
	09-				**PF941**	Ate	Ø 25,40	Alu, A/T
1.6 LS Eng.LXV (83kW)	09-				**PF941**	Ate	Ø 25,40	Alu, A/T
1.6, SW Eng.F16D4/ LDE (91kW)	09-		R		**CF903**		Ø 20,64	Alu
	09-				**PF941**	Ate	Ø 25,40	Alu, A/T
1.7 D, SW Eng.LUD (96kW)	12-				**PF941**	Ate	Ø 25,40	Alu, A/T
1.8 Eng.2H0 (104-106kW)	11-				**PF941**	Ate	Ø 25,40	Alu, A/T
1.8 Eng.2H0/ F18D4 (102-104kW)	09-		R		**CF903**		Ø 20,64	Alu
2.0 CDi Eng.LLW (90kW)	09-		R		**CF903**		Ø 20,64	Alu
2.0 CDi Eng.LLW (92kW)	10-		R		**CF903**		Ø 20,64	Alu
2.0 CDi, SW Eng.LNP/ Z20D1 (120kW)	10-		R		**CF903**		Ø 20,64	Alu
2.0 D LT Eng.LLW/ Z20S1 (110kW)	09-		R		**CF903**		Ø 20,64	Alu
	09-				**PF941**	Ate	Ø 25,40	Alu, A/T
Joy 3/05-								
0.8 (Pakistan)	05-		R		**CF678**		Ø 17,46	
1.0 (Pakistan)	05-		R		**CF678**		Ø 17,46	
Kalos 3/05-								
1.2 Eng.B12S1 (53kW)	05-		R		**CF074**		Ø 19,05	
1.4 16v Eng.F14D3 (69kW)	05-		R		**CF074**		Ø 19,05	
1.4 16v Eng.F14S3 (61kW)	05-		R		**CF074**		Ø 19,05	
Lacetti, SW (J200) 3/05-12/09								
1.4 16v Eng.F14D3 (69-70kW)	05-				**PF871**		Ø 22,20	Alu, -ESP
1.6 Eng.F16D3 (80kW)	05-				**PF871**		Ø 22,20	Alu, -ESP, M/T
1.8 Eng.T18SED (90kW)	05-				**PF871**		Ø 22,20	Alu, -ESP
2.0 D Eng.Z20DM (89kW)	07-				**PF871**		Ø 22,20	Alu, -ESP
Matiz 3/05-								
0.8 Eng.F8CV (38kW)	05-		R		**CF678**		Ø 17,46	
	05-				**PF443**		Ø 20,64	Ch -645871, Alu, +Fixing hole BFR, +ABS, M/T
	05-				**PF442**		Ø 20,64	Ch 645872-, Alu, -ABS, M/T
1.0 Eng.B10S1 (49kW)	05-		R		**CF678**		Ø 17,46	
	05-				**PF443**		Ø 20,64	Ch -577030/-645871, Alu, +Fixing hole BFR, +ABS
	05-				**PF442**		Ø 20,64	Ch 577031-, Alu, -ABS
1.0 Eng.F10NS (47kW)	05-		R		**CF678**		Ø 17,46	
	05-				**PF443**		Ø 20,64	Ch -645871, Alu, +Fixing hole BFR, +ABS, M/T
	05-				**PF442**		Ø 20,64	Ch 645872-, Alu, -ABS, M/T
Nubira, SW 3/05-12/09								
1.4 Eng.F14D3 (69kW)	05-				**PF871**		Ø 22,20	Alu
1.6 Eng.F16D3 (80kW)	05-				**PF871**		Ø 22,20	Alu, -ESP
1.8 Eng.T18SED (90kW)	05-				**PF871**		Ø 22,20	Alu, -ESP
Orlando 6/11-								
1.8 LT Eng.2H0/ F18D4 (104kW)	11-				**PF941**	Ate	Ø 25,40	Alu
2.0 D Eng.Z20D1 (120kW)	10-				**PF941**	Ate	Ø 25,40	Alu
2.0 D Eng.Z20D1 (96kW)	11-				**PF941**	Ate	Ø 25,40	Alu
Rezzo 3/05-								
1.6 Eng.A16DMS (79kW)	05-		R		**CF864**	Trw	Ø 20,64	
2.0 Eng.X20SED (90kW)	05-		R		**CF864**	Trw	Ø 20,64	
Spark I 3/05-2/10								
0.8 Eng.F8CV (37kW)	05-10		R		**CF678**		Ø 17,46	
1.0 Eng.F10NS (46kW)	05-10		R		**CF678**		Ø 17,46	
Spark II 3/10-								
1.0 Eng.B10D1 (50kW)	10-13		R		**CF074**		Ø 19,05	
	13-		R		**CF679**		Ø 20,64	
1.0 GPL Eng.B10D1 (50kW)	11-13		R		**CF074**		Ø 19,05	
	13-		R		**CF679**		Ø 20,64	
1.2 Eng.B12D1 (60kW)	10-13		R		**CF074**		Ø 19,05	
	13-		R		**CF679**		Ø 20,64	

CHEVROLET

		Spare Parts	F/R	L/R	FRITECH ref.		DIMENSIONS mm.	NOTE
1.2 LPG Eng.B12D1 (58-60kW)	10-		R		**CF679**		Ø 20,64	
Tacuma/ Vivant 1/05-12/09								
1.6 Eng.A16DMS (77kW)	05-		R		**CF864**		Ø 20,64	
1.6 Eng.A16DMS (79kW)	05-		R		**CF864**		Ø 20,64	
2.0 16v Eng.T20SED (90kW)	05-		R		**CF864**		Ø 20,64	
2.0 16v Eng.X20SED (89kW)	05-		R		**CF864**		Ø 20,64	

CHEVROLET USA

Astro Mini Van								
All models	85-86		R		**CF947**		Ø 20,64	
Astro Van								
All models	87-89		R		**CF934**		Ø 22,20	1/2 Ton
Bel Air - Biscayne - Caprice - Impala								
All models	77-96		R		**CF934**		Ø 22,20	Exc. SW, 9,5Inch Brake
	71-92		R		**CF931**		Ø 23,81	Exc. SW, 11Inch Brake
	69-96		R		**CF932**		Ø 25,40	SW
Beretta								
All models	92-96		R		**CF952**		Ø 17,46	Exc. Export
	87-91		R		**CF939**		Ø 19,05	
	92-96		R		**CF944**		Ø 22,20	Export
Berlinetta								
All models	93-97		R		**CF948**		Ø 20,64	
	1/81-12/81		R		**CF953**		Ø 22,20	Export
	76-81		R		**CF945**		Ø 23,81	Exc. Export
Blazer C, K, V								
All models	74-91		R		**CF931**		Ø 23,81	
	74-78		R		**CF932**		Ø 25,40	
	92-94		R		**CF961**		Ø 30,16	
Blazer S10								
All models	83-91		R		**CF928**		Ø 19,05	
	83-88		R		**CF935**		Ø 23,81	
Blazer T10								
All models	83-91		R		**CF928**		Ø 19,05	
Cadett								
All models	95-00		R		**CF944**		Ø 22,20	Export
Camaro								
All models	82-88		R		**CF928**		Ø 19,05	
	84-92		R		**CF938**		Ø 19,05	Exc. Performance package
	93-97		R		**CF948**		Ø 20,64	
	1/81-12/81		R		**CF953**		Ø 22,20	Export
	70-76		R		**CF934**		Ø 22,20	
	76-81		R		**CF945**		Ø 23,81	Exc. Export
Caprice								
All models	90-91		R		**CF953**		Ø 22,20	Exc. SW, HDB
	95-96		R		**CF953**		Ø 22,20	SW, HDB
Cavalier I								
All models	83-87		R		**CF930**		Ø 15,87	Exc. SW
	82-86		R		**CF927**		Ø 17,46	SW
	85-86		R		**CF952**		Ø 17,46	SW, Attached 2 Hole/Fori
Cavalier II								
All models	88-91		R		**CF940**		Ø 15,80	Exc. SW
Cavalier III								
All models	92-00		R		**CF952**		Ø 17,46	Exc. Export
	96-97		R		**CF933**		Ø 22,00	Export
	95-00		R		**CF944**		Ø 22,20	Export
Celebrity								
All models	82-87		R		**CF930**		Ø 15,87	SW, Exc. Diesel, HDB
	82-87		R		**CF927**		Ø 17,46	Exc. SW
	88-89		R		**CF952**		Ø 17,46	Exc. SW
	83-87		R		**CF937**		Ø 19,05	Exc. SW, HDB
	88-89		R		**CF784**		Ø 19,05	SW, HDB
	88-89		R		**CF951**		Ø 20,64	SW, FR
Chevelle								
All models	70-75		R		**CF934**		Ø 22,20	Exc. SW

CHEVROLET USA

		Spare Parts	F/R	L/R	FRITECH ref.		DIMENSIONS mm.	NOTE
All models	67-69		R		**CF945**		Ø 23,81	
	73-76		R		**CF931**		Ø 23,81	SW
Chevette								
All models	80-87		R		**CF927**		Ø 17,46	
Chevrolet								
All models	65-76		R		**CF932**		Ø 25,40	
Citation								
All models	80-85		R		**CF927**		Ø 17,46	
Corsica I								
All models	1/87-12/87		R		**CF930**		Ø 15,87	
Corsica II								
All models	87-91		R		**CF940**		Ø 15,80	
Corsica III								
All models	92-96		R		**CF952**		Ø 17,46	Exc. Export
	92-96		R		**CF944**		Ø 22,20	Export
Councours								
All models	76-77		R		**CF945**		Ø 23,81	
El Camino								
All models	78-87		R		**CF928**		Ø 19,05	
	70-75		R		**CF934**		Ø 22,20	
	64-69		R		**CF945**		Ø 23,81	
	76-77		R		**CF931**		Ø 23,81	
Iroc - Z28								
All models	93-97		R		**CF948**		Ø 20,64	
	1/81-12/81		R		**CF953**		Ø 22,20	Export
	76-81		R		**CF945**		Ø 23,81	Exc. Export
Jimmy								
All models	74-91		R		**CF931**		Ø 23,81	
	74-78		R		**CF932**		Ø 25,40	
Jimmy S15								
All models	83-88		R		**CF935**		Ø 23,81	
Jimmy T15								
All models	83-88		R		**CF928**		Ø 19,05	
K10, 15 Pick-Up								
All models	88-99		R		**CF959**		Ø 25,40	Only Diesel, +RC
	1/88-91		R		**CF960**		Ø 28,60	
	1/88-98		R		**CF961**		Ø 30,16	10Inch Brake
LLV Postal Vehicle								
All models	87-93		R		**CF946**		Ø 19,05	
	94-95		R		**CF762**		Ø 19,05	
Lumina								
All models	95-97		R		**CF933**		Ø 22,00	
	95-00		R		**CF944**		Ø 22,20	
	92-93		R		**CF957**		Ø 23,81	
Lumina Van								
All models	90-91		R		**CF784**		Ø 19,05	
Malibu 8/96-9/05								
All models	78-83		R		**CF928**		Ø 19,05	
	70-75		R		**CF934**		Ø 22,20	Exc. SW
	97-00		R		**CF955**		Ø 22,20	
	65-69		R		**CF945**		Ø 23,81	
	73-76		R		**CF931**		Ø 23,81	SW
Monte Carlo								
All models	78-88		R		**CF928**		Ø 19,05	
	95-97		R		**CF933**		Ø 22,00	
	70-75		R		**CF934**		Ø 22,20	
	95-00		R		**CF944**		Ø 22,20	
	76-77		R		**CF931**		Ø 23,81	
Nova								
All models	76-79		R		**CF945**		Ø 23,81	
Nova S								
All models	85-88		R	L	**CF215**		Ø 17,46	Exc. Eng. Twin Cam, FWD
	85-88		R	R	**CF214**		Ø 17,46	Exc. Eng. Twin Cam, FWD

CHEVROLET USA

		Spare Parts	F/R	L/R	FRITECH ref.		DIMENSIONS mm.	NOTE
Nova X								
All models	70-74		R		**CF934**		Ø 22,20	
Pick-Up								
All models	83-88		R		**CF928**		Ø 19,05	T10, 15
	92-00		R		**CF762**		Ø 19,05	S, T 10
	82-88		R		**CF935**		Ø 23,81	S10
	85-88		R		**CF941**		Ø 27,00	1/2 Ton 10 Range
	77-95		R		**CF942**		Ø 30,00	1 Ton 30 Range
Range 10								
All models	87-88		R		**CF931**		Ø 23,81	1/2 Ton
Range 20								
All models	1/87-12/87		R		**CF932**		Ø 25,40	3/4 Ton
	88-89		R		**CF941**		Ø 27,00	3/4 Ton
Range 30								
All models	87-91		R		**CF941**		Ø 27,00	1 Ton, SRW
	87-91		R		**CF942**		Ø 30,00	1 Ton, DRW
San Remo								
All models			R		**CF963**		Ø 22,20	
Sonoma								
All models	92-00		R		**CF762**		Ø 19,05	S, T 15
Sprint								
All models	85-88		R		**CF301**	Sanyco	Ø 17,46	Alu
Tahoe I 1/95-12/01								
All models	95-99		R		**CF959**		Ø 25,40	Exc. Diesel, 11Inch Brake
	95-01		R		**CF961**		Ø 30,16	10Inch Brake
Traker								
All models	96-98		R	L	**CF555**		Ø 22,20	
	96-98		R	R	**CF554**		Ø 22,20	

CHRYSLER

Grand Voyager II 1/96-4/08								
2.5 TD Eng.HR425CLI/ EE (84-87kW)	03-08				**PF927**		Ø 25,40	Alu, +ESP
Sebring III (JS) 7/07-12/10								
2.0 CRD, Cabrio Eng.BYL (103kW)	07-		R		**CF994**		Ø 20,64	
2.0 VVT Eng.ECN (115kW)	07-		R		**CF994**		Ø 20,64	
2.4 VVT Eng.ED3 (125kW)	07-		R		**CF994**		Ø 20,64	
2.7 Eng.EER (141kW)	07-		R		**CF994**		Ø 20,64	
Stratus (JA) 12/95-4/01								
2.0 16v Eng.ECB (98kW)	95-01		R		**CF402**	Luc	Ø 15,87	
2.0 LE, Cabrio Eng.C00/ 420X (96kW)	95-01		R		**CF402**	Luc	Ø 15,87	
Voyager I (AS) 8/84-9/90								
2.5 Eng.K00 (72kW)	84-90		R		**CF695**		Ø 20,64	-ABS
Voyager II (ES) 8/90-9/95								
2.5 i Eng.K (74kW)	8/90-8/93		R		**CF695**		Ø 20,64	-ABS
	9/93-9/95		R		**CF785**		Ø 17,46	
2.5 i Eng.K00 (72kW)	90-8/93		R		**CF695**		Ø 20,64	-ABS
	9/93-9/95		R		**CF785**		Ø 17,46	
2.5 TD Eng.09B/ M00 (87kW)	92-8/93		R		**CF695**		Ø 20,64	-ABS
	9/93-9/95		R		**CF785**		Ø 17,46	
3.0 i Eng.6G72/ 300 (108kW)	91-8/93		R		**CF695**		Ø 20,64	-ABS
	9/93-9/95		R		**CF785**		Ø 17,46	
3.3 i Eng.EGA (120kW)	9/93-9/95		R		**CF785**		Ø 17,46	
3.3 i, AWD Eng.EGA (110kW)	8/90-8/93		R		**CF695**		Ø 20,64	-ABS
	9/93-9/95		R		**CF785**		Ø 17,46	
3.3 i, AWD Eng.R00 (120kW)	8/90-8/93		R		**CF695**		Ø 20,64	-ABS
	9/93-9/95		R		**CF785**		Ø 17,46	
Voyager III (GS) 1/95-3/01								
2.0 i Eng.C00 (98kW)	95-8/99		R		**CF779**		Ø 19,05	
	95-01				**PF811**		Ø 23,81	Alu, -TC
2.4 i, AWD Eng.EDZ (111kW)	95-8/99		R		**CF779**		Ø 19,05	
	95-01				**PF811**		Ø 23,81	Alu, -TC
2.5 TD Eng.425CLIRS-X (85kW)	95-8/99		R		**CF779**		Ø 19,05	
	96-99		R		**CF794**		Ø 20,64	Usa, Dodge
	95-01				**PF811**		Ø 23,81	Alu, -TC

CHRYSLER

		Spare Parts	F/R	L/R	FRITECH ref.		DIMENSIONS mm.	NOTE
3.0 Eng.EFA (112kW)	95-8/99		R		**CF779**		Ø 19,05	
	95-01				**PF811**		Ø 23,81	Alu, -TC
3.3 i Eng.R00 (116kW)	95-8/99		R		**CF779**		Ø 19,05	
	95-01				**PF811**		Ø 23,81	Alu, -TC
3.3 i 4WD Eng.EGA (116kW)	95-8/99		R		**CF779**		Ø 19,05	
	95-01				**PF811**		Ø 23,81	Alu, -TC
3.8 i, AWD Eng.EGH (122-131kW)	95-8/99		R		**CF779**		Ø 19,05	
	95-01				**PF811**		Ø 23,81	Alu, -TC
Voyager IV (RG) 2/00-12/07								
2.4 Eng.EDZ (108kW)	03-				**PF927**		Ø 25,40	Alu, +ESP
	00-01				**PF928**		Ø 26,99	Alu, +ESP
	00-				**PF809**		Ø 26,99	Alu
2.5 CRD Eng.ENC/ ENJ (105kW)	02-				**PF927**		Ø 25,40	Alu, +ESP
	00-01				**PF928**		Ø 26,99	Alu, +ESP
	00-				**PF809**		Ø 26,99	Alu
2.8 CRD Eng.ENR (110kW)	04-07				**PF927**		Ø 25,40	Alu, +ESP
	04-				**PF809**		Ø 26,99	Alu
3.3, AWD Eng.EGA (128kW)	01-08				**PF927**		Ø 25,40	Alu, +ESP
	00-01				**PF928**		Ø 26,99	Alu, +ESP
	00-				**PF809**		Ø 26,99	Alu
3.8, AWD Eng.EGH (160kW)	00-				**PF809**		Ø 26,99	Alu
Ypsilon 5/11-								
0.9 Twinair Eng.312A2.000 (63kW)	11-		R		**CF827**	Loc	Ø 20,64	Alu
1.2 Eng.169A4.000 (51kW)	11-		R		**CF827**	Loc	Ø 20,64	Alu
1.3 MJT Eng.199B1.000 (70kW)	11-		R		**CF827**	Loc	Ø 20,64	Alu

CHRYSLER USA

Laser								
All models	84-86		R		**CF929**		Ø 14,28	
Le Baron								
All models	1/91-93		R		**CF402**		Ø 15,87	HDB
Le Baron GTS								
All models	1/91-12/91		R		**CF402**		Ø 15,87	
New Yorker								
All models	83-88		R		**CF929**		Ø 14,28	Turbo 1988
	88-89		R		**CF402**		Ø 15,87	Exc. Turbo
New Yorker Landau								
All models	88-89		R		**CF402**		Ø 15,87	Exc. Turbo
Sebring								
Convertible	95-96		R		**CF402**		Ø 15,87	
Town & Country I 1/90-12/95								
3.0 Eng.6G72 (106kW)	90-95		R		**CF319**		Ø 19,05	
3.3 Eng.EGA (112kW)	90-95		R		**CF319**		Ø 19,05	
3.8 Eng.EGH (121kW)	90-95		R		**CF319**		Ø 19,05	
Voyager								
All models	84-95		R		**CF319**		Ø 19,05	

CITROËN

2 CV 3/63-								
0.4 Eng.A53 (12kW)	7/64-		R		**CF382**		Ø 19,05	
0.4 Eng.A79-1(AYA2) (17kW)	6/70-		F		**CF203**		Ø 28,57	
	2/70-6/70		F		**CF381**		Ø 28,60	
	2/70-6/70		R		**CF349**		Ø 17,46	
	6/70-		R		**CF350**		Ø 17,46	
	6/70-7/75				**PF056**		Ø 19,05	
	7/75-				**PF057**		Ø 20,64	
0.6 Eng.A06-635 (21kW)	6/70-		F		**CF203**		Ø 28,57	
	6/70-		R		**CF350**		Ø 17,46	
	6/70-7/76				**PF056**		Ø 19,05	
	7/76-				**PF057**		Ø 20,64	
Ami 1/63-12/77								
0.6 Eng.M4(AM) (18kW)	12/63-68		R		**CF349**		Ø 17,46	
	4/65-68		R		**CF382**		Ø 19,05	

		Spare Parts	F/R	L/R	FRITECH ref.		DIMENSIONS mm.	NOTE
Ax (ZA) 7/84-12/98								
0.95 Eng.CDY(TU9M) (33kW)	86-98		R	L	**CF077**	Bdx	Ø 19,05	CRCI, -ABS, 3p
	86-98		R	R	**CF078**	Bdx	Ø 19,05	CRCI, -ABS, 3p
	86-98		R		**CF122**		Ø 20,64	+ABS
	86-98		R		**CF045**		Ø 19,05	-ABS, 5p
	86-98				**PF008**	Ate	Ø 19,00	-ABS
	86-98				**PF180**	Bdx	Ø 22,20	+ABS
0.95 Eng.CDZ(TU9M) (37kW)	86-98		R	L	**CF077**	Bdx	Ø 19,05	CRCI, -ABS, 3p
	86-98		R	R	**CF078**	Bdx	Ø 19,05	CRCI, -ABS, 3p
	86-98		R		**CF122**		Ø 20,64	+ABS
	86-98		R		**CF045**		Ø 19,05	-ABS, 5p
	86-98				**PF008**	Ate	Ø 19,00	-ABS
	86-98				**PF180**	Bdx	Ø 22,20	+ABS
0.95 E Eng.C3A (30kW)	86-88		R	L	**CF077**	Bdx	Ø 19,05	CRCI, -ABS, -Servo, 3p
	86-88		R	R	**CF078**	Bdx	Ø 19,05	CRCI, -ABS, -Servo, 3p
	86-88		R		**CF122**		Ø 20,64	+ABS
	86-88		R		**CF045**		Ø 19,05	-ABS, +Servo, 5p
	86-88				**PF008**	Ate	Ø 19,00	-ABS, +Servo
	86-88				**PF007**	Ate	Ø 20,64	-ABS, +Servo
	86-88				**PF180**	Bdx	Ø 22,20	+ABS
	86-88				**PF143**		Ø 19,05	-ABS, -Servo
1.1 Eng.H1B (40kW)	9/86-90		R		**CF045**		Ø 19,05	-ABS
	9/87-90				**PF008**	Ate	Ø 19,00	-ABS, +Servo
	9/86-8/87				**PF007**	Ate	Ø 20,64	-ABS, +Servo
1.1 Eng.HDZ(TU1M) (40kW)	89-97		R	L	**CF077**	Bdx	Ø 19,05	CRCI, -ABS, 3p
	89-97		R	R	**CF078**	Bdx	Ø 19,05	CRCI, -ABS, 3p
	89-97		R		**CF122**		Ø 20,64	+ABS
	89-97		R		**CF045**		Ø 19,05	-ABS, 5p
	89-97				**PF008**	Ate	Ø 19,00	-ABS, 5p
	89-97				**PF008**	Ate	Ø 19,00	-ABS, +Servo, 3p
	89-97				**PF180**	Bdx	Ø 22,20	+ABS
1.1 Kat Eng.HAZ(TU1CP) (40kW)	88-89		R		**CF045**		Ø 19,05	-ABS
	88-89				**PF008**	Ate	Ø 19,00	-ABS, +Servo
1.3 Sport Eng.M4A (70kW)	4/87-88		R		**CF045**		Ø 19,05	-ABS
	1/88-				**PF008**	Ate	Ø 19,00	-ABS, +Servo
	4/87-1/88				**PF007**	Ate	Ø 20,64	-ABS, +Servo
1.4 Eng.K1F (49kW)	88-89		R		**CF045**		Ø 19,05	-ABS
	88-89				**PF008**	Ate	Ø 19,00	-ABS, +Servo
1.4 Eng.K2A/ D (55kW)	91-97		R	L	**CF077**	Bdx	Ø 19,05	CRCI, -ABS, 3p
	91-97		R	R	**CF078**	Bdx	Ø 19,05	CRCI, -ABS, 3p
	91-97		R		**CF122**		Ø 20,64	+ABS
	91-97		R		**CF045**		Ø 19,05	-ABS
	91-97				**PF008**	Ate	Ø 19,00	-ABS, +Servo
	91-97				**PF180**	Bdx	Ø 22,20	+ABS
1.4 Eng.KAY(TU3CP) (44kW)	86-88		R		**CF045**		Ø 19,05	-ABS
	1/88-12/88				**PF008**	Ate	Ø 19,00	-ABS, +Servo
	86-1/88				**PF007**	Ate	Ø 20,64	-ABS, +Servo
1.4 Eng.KDX(TU3M-Z) (55kW)	5/91-97		R	L	**CF077**	Bdx	Ø 19,05	CRCI, -ABS, 3p
	5/91-97		R	R	**CF078**	Bdx	Ø 19,05	CRCI, -ABS, 3p
	5/91-97		R		**CF122**		Ø 20,64	+ABS
	10/87-97		R		**CF045**		Ø 19,05	-ABS
	1/88-97				**PF008**	Ate	Ø 19,00	-ABS, +Servo
	10/87-1/88				**PF007**	Ate	Ø 20,64	-ABS, +Servo
	5/91-97				**PF180**	Bdx	Ø 22,20	+ABS
1.4 4WD Eng.KDY(TU3M) (55kW)	5/91-		R	L	**CF092**	Bdx	Ø 19,05	
	5/91-		R	R	**CF093**	Bdx	Ø 19,05	
	91-96				**PF008**	Ate	Ø 19,00	-ABS, +Servo
	5/91-96				**PF180**	Bdx	Ø 22,20	+ABS
1.4 D Eng.K9Y(TUD3Y) (37kW)	5/91-96		R	L	**CF077**	Bdx	Ø 19,05	CRCI, -ABS, 3p
	5/91-96		R	R	**CF078**	Bdx	Ø 19,05	CRCI, -ABS, 3p
	5/91-96		R		**CF122**		Ø 20,64	+ABS, 5p
	-4/91		R		**CF045**		Ø 19,05	-ABS
	91-97				**PF008**	Ate	Ø 19,00	-ABS, +Servo
	91-97				**PF180**	Bdx	Ø 22,20	+ABS

CITROËN

		Spare Parts	F/R	L/R	FRITECH ref.		DIMENSIONS mm.	NOTE
1.4 D, 4WD Eng.K9A(TUD3) (38kW)	5/91-92		R	L	**CF077**	Bdx	Ø 19,05	CRCI, -ABS, 3p
	5/91-92		R	R	**CF078**	Bdx	Ø 19,05	CRCI, -ABS, 3p
	5/91-92		R		**CF122**		Ø 20,64	+ABS, 5p
	9/88-91		R		**CF045**		Ø 19,05	-ABS
	88-92				**PF008**	Ate	Ø 19,00	-ABS, +Servo
	88-92				**PF180**	Bdx	Ø 22,20	+ABS
1.4 GTi Eng.KFY(TU3FJ2) (66kW)	5/91-96		R	L	**CF083**	Bdx	Ø 19,05	CRCI
	5/91-96		R	R	**CF084**	Bdx	Ø 19,05	CRCI
	5/91-96		R		**CF122**		Ø 20,64	+ABS
	5/91-96				**PF007**	Ate	Ø 20,64	-ABS, +Servo
	5/91-96				**PF180**	Bdx	Ø 22,20	+ABS
1.4 GTi Eng.KFZ(TU3FJ2) (69-74kW)	5/91-96		R	L	**CF083**	Bdx	Ø 19,05	CRCI
	5/91-96		R	R	**CF084**	Bdx	Ø 19,05	CRCI
	5/91-96		R		**CF122**		Ø 20,64	+ABS
	5/91-96				**PF007**	Ate	Ø 20,64	-ABS, +Servo
	5/91-96				**PF180**	Bdx	Ø 22,20	+ABS
1.4, 4WD Eng.K2A/ B (62kW)	5/91-92		R	L	**CF077**	Bdx	Ø 19,05	CRCI, -ABS, 3p
	5/91-92		R	R	**CF078**	Bdx	Ø 19,05	CRCI, -ABS, 3p
	5/91-92		R		**CF122**		Ø 20,64	+ABS
	88-92		R		**CF045**		Ø 19,05	-ABS
	1/88-92				**PF008**	Ate	Ø 19,00	-ABS, +Servo
	5/91-92				**PF180**	Bdx	Ø 22,20	+ABS
1.5 D Eng.VJY/ VJZ(TUD5) (40-43kW)	94-97		R	L	**CF077**	Bdx	Ø 19,05	CRCI, -ABS, 3p
	94-97		R	R	**CF078**	Bdx	Ø 19,05	CRCI, -ABS, 3p
	94-97		R		**CF122**		Ø 20,64	+ABS, 5p
	94-97				**PF008**	Ate	Ø 19,00	-ABS, +Servo
	94-97				**PF180**	Bdx	Ø 22,20	+ABS
Berlingo I (MF) 7/96-5/08								
1.1, i Eng.HDZ/HFX(TU1M/ K/ MZ/ JP) (41-44kW)	7/96-		R		**CF158**	Luc	Ø 22,00	
	7/96-		R		**CF868**	Trw	Ø 22,00	Alu
	6/00-				**PF268**	Bdx	Ø 23,81	Ch -09001, Alu, +ABS
	7/96-6/00				**PF265**	Bdx	Ø 23,81	Alu, +ABS
	00-				**PF272**	Bdx	Ø 23,81	Ch -09001, Alu, -ABS
	7/96-6/00				**PF271**	Bdx	Ø 23,81	Alu, -ABS
1.4 Eng.KFV(TU3JP) (54kW)	02-		R		**CF868**	Trw	Ø 22,00	Alu
1.4 Eng.KFW(TU3JP) (53kW)	02-		R		**CF868**	Trw	Ø 22,00	Alu
1.4 Bivalent Eng.KFW(TU3JP) (48kW)	02-		R		**CF158**	Luc	Ø 22,00	+ABS, -ESP
	02-		R		**CF868**	Trw	Ø 22,00	Alu, +ABS, -ESP
	02-				**PF268**	Bdx	Ø 23,81	Alu, +ABS, -ESP
	02-				**PF272**	Bdx	Ø 23,81	Ch -09001, Alu, -ABS
1.4 i, Bivalent Eng.KFX(TU3JP) (55kW)	7/96-		R		**CF158**	Luc	Ø 22,00	
	7/96-		R		**CF868**	Trw	Ø 22,00	Alu
	6/00-				**PF268**	Bdx	Ø 23,81	Ch -09001, Alu, +ABS
	7/96-6/00				**PF265**	Bdx	Ø 23,81	Alu, +ABS
	00-				**PF272**	Bdx	Ø 23,81	Ch -09001, Alu, -ABS
	7/96-6/00				**PF271**	Bdx	Ø 23,81	Alu, -ABS
1.6 16v Eng.NFU(TU5JP4) (80kW)	00-		R		**CF158**	Luc	Ø 22,00	
	00-		R		**CF868**	Trw	Ø 22,00	Alu
	02-				**PF884**	Bch	Ø 23,81	Alu, +ABS, +ESP
	00-02				**PF265**	Bdx	Ø 23,81	Alu, +ABS
	02-				**PF268**	Bdx	Ø 23,81	Alu, +ABS
	02-				**PF272**	Bdx	Ø 23,81	Ch -09001, Alu, -ABS
	00-02				**PF271**	Bdx	Ø 23,81	Alu, -ABS
1.6 HDi Eng.9HW(DV6ETED/ DV6B) (55kW)	05-		R		**CF158**	Luc	Ø 22,00	+ABS, -ESP
	05-		R		**CF868**	Trw	Ø 22,00	Alu, +ABS, -ESP
	05-				**PF268**	Bdx	Ø 23,81	Alu, +ABS, -ESP
	05-				**PF272**	Bdx	Ø 23,81	Ch -09001, Alu, -ABS
1.6 HDi Eng.9HX(DV6ATED4) (66kW)	05-		R		**CF158**	Luc	Ø 22,00	+ABS, -ESP
	05-		R		**CF868**	Trw	Ø 22,00	Alu, +ABS, -ESP
	05-				**PF884**	Bch	Ø 23,81	Alu, +ABS, +ESP
	05-				**PF268**	Bdx	Ø 23,81	Alu, +ABS, -ESP
	05-				**PF272**	Bdx	Ø 23,81	Ch -09001, Alu, -ABS
1.6 HDi Eng.9HZ(DV6TED4) (80kW)	05-		R		**CF158**	Luc	Ø 22,00	+ABS, -ESP
	05-		R		**CF868**	Trw	Ø 22,00	Alu, +ABS, -ESP

		Spare Parts	F/R	L/R	FRITECH ref.		DIMENSIONS mm.	NOTE
1.8 D Eng.A9A(XUD7) (43kW)	7/98-		R		**CF158**	Luc	Ø 22,00	
	7/98-		R		**CF868**	Trw	Ø 22,00	Alu
	6/00-				**PF268**	Bdx	Ø 23,81	Ch -09001, Alu, +ABS
	7/98-6/00				**PF265**	Bdx	Ø 23,81	Alu, +ABS
	00-				**PF272**	Bdx	Ø 23,81	Ch -09001, Alu, -ABS
	7/98-6/00				**PF271**	Bdx	Ø 23,81	Alu, -ABS
1.8i Eng.LFX(XU7JB) (66kW)	97-		R		**CF158**	Luc	Ø 22,00	
	97-		R		**CF868**	Trw	Ø 22,00	Alu
	97-9/98				**PF265**	Bdx	Ø 23,81	Alu, +ABS
	00-				**PF272**	Bdx	Ø 23,81	Ch -09001, Alu, -ABS
	97-6/00				**PF271**	Bdx	Ø 23,81	Alu, -ABS
1.9 D Eng.D9B/DJY(XUD9A/L) (50kW)	7/96-		R		**CF158**	Luc	Ø 22,00	
	7/96-		R		**CF868**	Trw	Ø 22,00	Alu
	6/00-				**PF268**	Bdx	Ø 23,81	Ch -09001, Alu, +ABS
	7/96-6/00				**PF265**	Bdx	Ø 23,81	Alu, +ABS
	00-				**PF272**	Bdx	Ø 23,81	Ch -09001, Alu, -ABS
	7/96-6/00				**PF271**	Bdx	Ø 23,81	Alu, -ABS
1.9 D, 4WD Eng.WJY(DW8B)/ WJZ(DW8) (51kW)	98-		R		**CF158**	Luc	Ø 22,00	
	98-		R		**CF868**	Trw	Ø 22,00	Alu
	98-02				**PF573**	Ate	Ø 23,81	Alu, -ABS
	6/00-				**PF268**	Bdx	Ø 23,81	Ch -09001, Alu, +ABS
	98-6/00				**PF265**	Bdx	Ø 23,81	Alu, +ABS
	00-				**PF272**	Bdx	Ø 23,81	Ch -09001, Alu, -ABS
	98-6/00				**PF271**	Bdx	Ø 23,81	Alu, -ABS
2.0 HDi, 4WD Eng.RHY(DW10TD) (66kW)	12/99-		R		**CF158**	Luc	Ø 22,00	
	12/99-		R		**CF868**	Trw	Ø 22,00	Alu
	02-				**PF884**	Bch	Ø 23,81	Alu, +ABS, +ESP
	6/00-				**PF268**	Bdx	Ø 23,81	Ch -09001, Alu, +ABS
	12/99-6/00				**PF265**	Bdx	Ø 23,81	Alu, +ABS
	00-				**PF272**	Bdx	Ø 23,81	Ch -09001, Alu, -ABS
	12/99-6/00				**PF271**	Bdx	Ø 23,81	Alu, -ABS
electrique (16kW)	00-		R		**CF158**	Luc	Ø 22,00	
	00-		R		**CF868**	Trw	Ø 22,00	Alu
	6/00-				**PF268**	Bdx	Ø 23,81	Ch -09001, Alu, +ABS
	00-				**PF272**	Bdx	Ø 23,81	Ch -09001, Alu, -ABS
Berlingo II (B9) 6/08-								
1.4 Eng.KFW(TU3JP) (55kW)	09-		R		**CF158**	Luc	Ø 22,00	
	09-				**PF268**	Bdx	Ø 23,81	Alu, +ABS
	09-				**PF272**	Bdx	Ø 23,81	Alu, -ABS
C1 I (PM, PN) 6/05-5/14								
1.0 Eng.1KR-FE (50kW)	05-14		R		**CF802**	Bch	Ø 17,46	Alu
	05-14				**PF853**	Bch	Ø 20,64	Alu, -ESP
	05-14				**PF794**		Ø 20,64	Alu, +ESP
1.4 HDi Eng.DV4D (40kW)	05-14		R		**CF802**	Bch	Ø 17,46	Alu
	05-14				**PF853**	Bch	Ø 20,64	Alu, -ESP
	05-14				**PF794**		Ø 20,64	Alu, +ESP
C1 II, Airscape 6/14-								
1.0 VTi Eng.1KRFE (51kW)	14-		R		**CF1018**	Bch	Ø 17,46	Alu
1.2 VTi Eng.EB2D (60kW)	14-		R		**CF1018**	Bch	Ø 17,46	Alu
C2 (JM) 9/03-12/10								
1.1 Eng.HFX(TU1JP) (44kW)	03-		R	L	**CF683**	Luc	Ø 19,05	CRCI, -ABS
	03-		R	R	**CF684**	Luc	Ø 19,05	CRCI, -ABS
	03-		R		**CF801**	Bch	Ø 20,64	Alu, +ABS
	03-		R		**CF162**	Luc	Ø 20,64	Alu, +ABS
	06-09				**PF915**	Bch	Ø 22,20	Ch 10801-, Alu, +ABS, -ESP
	03-05				**PF625**	Bch	Ø 22,20	Ch -10800, Alu, -ABS
	03-05				**PF506**	Luc	Ø 22,20	Ch -10800, Alu, +ABS, +ESP
	03-05				**PF507**	Luc	Ø 22,20	Ch -10800, Alu, +ABS, -ESP
	03-05				**PF508**	Luc	Ø 20,64	Ch -10800, Alu, -ABS
	06-				**PF792**	Trw	Ø 22,20	Ch 10801-, Alu, +ABS, +ESP
	06-				**PF791**	Trw	Ø 22,20	Ch 10801-, Alu, +ABS, -ESP
	03-				**CZ104**	Fte	Ø 19,05	Pla
1.4 Eng.KFV(TU3JP) (54kW)	03-		R	L	**CF683**	Luc	Ø 19,05	CRCI, -ABS
	03-		R	R	**CF684**	Luc	Ø 19,05	CRCI, -ABS

CITROËN

		Spare Parts	F/R	L/R	FRITECH ref.		DIMENSIONS mm.	NOTE
1.4 Eng.KFV(TU3JP) (54kW)	03-		R		**CF801**	Bch	Ø 20,64	Alu, +ABS
	03-		R		**CF162**	Luc	Ø 20,64	Alu, +ABS
	06-09				**PF915**	Bch	Ø 22,20	Ch 10801-, Alu, +ABS, -ESP
	03-05				**PF625**	Bch	Ø 22,20	Ch -10800, Alu, -ABS
	03-05				**PF506**	Luc	Ø 22,20	Ch -10800, Alu, +ABS, +ESP
	03-05				**PF507**	Luc	Ø 22,20	Ch -10800, Alu, +ABS, -ESP
	03-05				**PF508**	Luc	Ø 20,64	Ch -10800, Alu, -ABS
	06-				**PF792**	Trw	Ø 22,20	Ch 10801-, Alu, +ABS, +ESP
	06-				**PF791**	Trw	Ø 22,20	Ch 10801-, Alu, +ABS, -ESP
	03-				**CZ104**	Fte	Ø 19,05	Pla
1.4 16v Eng.KFU(ET3J4) (65kW)	06-		R		**CF801**	Bch	Ø 20,64	Alu, +ABS
	06-		R		**CF162**	Luc	Ø 20,64	Alu
	06-				**PF792**	Trw	Ø 22,20	Ch 10801-, Alu, +ABS, +ESP
	06-				**PF791**	Trw	Ø 22,20	Ch 10801-, Alu, +ABS, -ESP
	06-				**CZ104**	Fte	Ø 19,05	Pla
1.4 HDi Eng.8HX(DV4TD) (50kW)	9/03-		R	L	**CF683**	Luc	Ø 19,05	CRCI, -ABS
	9/03-		R	R	**CF684**	Luc	Ø 19,05	CRCI, -ABS
	9/03-		R		**CF801**	Bch	Ø 20,64	Alu
	9/03-		R		**CF162**	Luc	Ø 20,64	Alu, +ABS
	06-09				**PF915**	Bch	Ø 22,20	Ch 10801-, Alu, +ABS, -ESP
	03-05				**PF625**	Bch	Ø 22,20	Ch -10800, Alu, -ABS
	03-05				**PF506**	Luc	Ø 22,20	Ch -10800, Alu, +ABS, +ESP
	03-05				**PF507**	Luc	Ø 22,20	Ch -10800, Alu, +ABS, -ESP
	03-05				**PF508**	Luc	Ø 20,64	Ch -10800, Alu, -ABS
	06-				**PF792**	Trw	Ø 22,20	Ch 10801-, Alu, +ABS, +ESP
	06-				**PF791**	Trw	Ø 22,20	Ch 10801-, Alu, +ABS, -ESP
	03-				**CZ104**	Fte	Ø 19,05	Pla
1.6 16v Eng.NFU(TU5JP4) (80kW)	9/03-		R	L	**CF683**	Luc	Ø 19,05	CRCI, -ABS
	9/03-		R	R	**CF684**	Luc	Ø 19,05	CRCI, -ABS
	9/03-		R		**CF162**	Luc	Ø 20,64	Alu, +ABS
	03-05				**PF625**	Bch	Ø 22,20	Ch -10800, Alu, -ABS
	03-05				**PF506**	Luc	Ø 22,20	Ch -10800, Alu, +ABS, +ESP
	03-05				**PF507**	Luc	Ø 22,20	Ch -10800, Alu, +ABS, -ESP
	03-05				**PF508**	Luc	Ø 20,64	Ch -10800, Alu, -ABS
	06-				**PF792**	Trw	Ø 22,20	Ch 10801-, Alu, +ABS, +ESP
	06-				**PF791**	Trw	Ø 22,20	Ch 10801-, Alu, +ABS, -ESP
	03-				**CZ104**	Fte	Ø 19,05	Pla
1.6 HDi Eng.9HZ(DV6TED4) (80kW)	9/05-12/05				**PF625**	Bch	Ø 22,20	Ch -10800, Alu, -ABS
	9/05-12/05				**PF506**	Luc	Ø 22,20	Ch -10800, Alu, +ABS, +ESP
	9/05-12/05				**PF507**	Luc	Ø 22,20	Ch -10800, Alu, +ABS, -ESP
	9/05-12/05				**PF508**	Luc	Ø 20,64	Ch -10800, Alu, -ABS
	06-				**PF792**	Trw	Ø 22,20	Ch 10801-, Alu, +ABS, +ESP
	06-				**PF791**	Trw	Ø 22,20	Ch 10801-, Alu, +ABS, -ESP
	05-				**CZ103**	Fte	Ø 19,05	Pla
1.6 VTS Eng.NFS(TU5JP4S) (90kW)	06-		R		**CF162**	Luc	Ø 20,64	Alu, +ABS
	1/05-12/05				**PF625**	Bch	Ø 22,20	Ch -10800, Alu, -ABS
	1/05-12/05				**PF506**	Luc	Ø 22,20	Ch -10800, Alu, +ABS, +ESP
	1/05-12/05				**PF507**	Luc	Ø 22,20	Ch -10800, Alu, +ABS, -ESP
	1/05-12/05				**PF508**	Luc	Ø 20,64	Ch -10800, Alu, -ABS
	06-				**PF792**	Trw	Ø 22,20	Ch 10801-, Alu, +ABS, +ESP
	06-				**PF791**	Trw	Ø 22,20	Ch 10801-, Alu, +ABS, -ESP
	05-				**CZ104**	Fte	Ø 19,05	Pla
C3 I (FC) 2/02-10/09								
1.1 Eng.HFX(TU1JP) (44kW)	2/02-		R	L	**CF683**	Luc	Ø 19,05	CRCI, -ABS
	2/02-		R	R	**CF684**	Luc	Ø 19,05	CRCI, -ABS
	02-		R		**CF801**	Bch	Ø 20,64	Alu, +ABS
	2/02-		R		**CF520**	Luc	Ø 20,64	Alu, +ABS
	06-09				**PF915**	Bch	Ø 22,20	Ch 10801-, Alu, +ABS, -ESP
	02-				**PF625**	Bch	Ø 22,20	Alu, +ABS
	2/02-				**PF506**	Luc	Ø 22,20	Alu, +ABS, +ESP
	2/02-				**PF507**	Luc	Ø 22,20	Alu, +ABS, -ESP
	2/02-				**PF508**	Luc	Ø 20,64	Alu, -ABS
	02-				**CZ104**	Fte	Ø 19,05	Pla

		Spare Parts	F/R	L/R	FRITECH ref.		DIMENSIONS mm.	NOTE
1.4 Eng.KFV(TU3JP) (54kW)	2/02-		R	L	**CF683**	Luc	Ø 19,05	CRCI, -ABS
	2/02-		R	R	**CF684**	Luc	Ø 19,05	CRCI, -ABS
	02-		R		**CF801**	Bch	Ø 20,64	Alu, +ABS
	2/02-		R		**CF520**	Luc	Ø 20,64	Alu, +ABS
	02-				**PF625**	Bch	Ø 22,20	Alu, +ABS
	2/02-				**PF506**	Luc	Ø 22,20	Alu, +ABS, +ESP
	2/02-				**PF507**	Luc	Ø 22,20	Alu, +ABS, -ESP
	2/02-				**PF508**	Luc	Ø 20,64	Alu, -ABS
	02-				**CZ104**	Fte	Ø 19,05	Pla
1.4 16v Eng.KFU(ET3J4) (65kW)	03-		R	L	**CF683**	Luc	Ø 19,05	CRCI, -ABS
	03-		R	R	**CF684**	Luc	Ø 19,05	CRCI, -ABS
	03-		R		**CF801**	Bch	Ø 20,64	Alu, +ABS
	03-		R		**CF520**	Luc	Ø 20,64	Alu, +ABS
	03-				**PF625**	Bch	Ø 22,20	Alu, +ABS
	03-				**PF507**	Luc	Ø 22,20	Alu, +ABS, -ESP
	03-				**CZ104**	Fte	Ø 19,05	Pla
1.4 HDi Eng.8HX(DV4TD) (50kW)	2/02-		R	L	**CF683**	Luc	Ø 19,05	CRCI, -ABS
	2/02-		R	R	**CF684**	Luc	Ø 19,05	CRCI, -ABS
	02-		R		**CF801**	Bch	Ø 20,64	Alu, +ABS
	2/02-		R		**CF520**	Luc	Ø 20,64	Alu, +ABS
	06-09				**PF915**	Bch	Ø 22,20	Ch 10801-, Alu, +ABS, -ESP
	02-				**PF625**	Bch	Ø 22,20	Alu, +ABS
	2/02-				**PF506**	Luc	Ø 22,20	Alu, +ABS, +ESP
	2/02-				**PF507**	Luc	Ø 22,20	Alu, +ABS, -ESP
	2/02-				**PF508**	Luc	Ø 20,64	Alu, -ABS
	02-				**CZ104**	Fte	Ø 19,05	Pla
1.4 HDi Eng.8HY(DV4TED4) (66kW)	02-				**PF625**	Bch	Ø 22,20	Alu, +ABS
	2/02-				**PF506**	Luc	Ø 22,20	Alu, +ABS, +ESP
	2/02-				**PF507**	Luc	Ø 22,20	Alu, +ABS, -ESP
	2/02-				**PF508**	Luc	Ø 20,64	Alu, -ABS
	02-				**CZ103**	Fte	Ø 19,05	Pla
	02-				**PZ114**	Fte	Ø 15,87	Pla, LHD
1.6 16v Eng.NFU(TU5JP4) (80kW)	02-				**PF625**	Bch	Ø 22,20	Alu, +ABS
	02-				**PF506**	Luc	Ø 22,20	Alu, +ABS, +ESP
	02-				**PF507**	Luc	Ø 22,20	Alu, +ABS, -ESP
	02-				**PF508**	Luc	Ø 20,64	Alu, -ABS
	02-				**CZ104**	Fte	Ø 19,05	Pla
1.6 HDi Eng.9HX(DV6ATED4) (66kW)	05-				**PF625**	Bch	Ø 22,20	Alu, +ABS
	05-				**PF506**	Luc	Ø 22,20	Alu, +ABS, +ESP
	05-				**PF507**	Luc	Ø 22,20	Alu, +ABS, -ESP
	05-				**PF508**	Luc	Ø 20,64	Alu, -ABS
	05-09				**PF792**	Trw	Ø 22,20	Alu, +ABS, +ESP
	05-09				**PF791**	Trw	Ø 22,20	Alu, +ABS, -ESP
	05-				**CZ103**	Fte	Ø 19,05	Pla
	05-				**PZ114**	Fte	Ø 15,87	Pla, LHD
1.6 HDi 16v Eng.9HZ(DV6TED4) (80kW)	05-				**PF625**	Bch	Ø 22,20	Alu, +ABS
	05-				**PF506**	Luc	Ø 22,20	Alu, +ABS, +ESP
	05-				**PF507**	Luc	Ø 22,20	Alu, +ABS, -ESP
	05-				**PF508**	Luc	Ø 20,64	Alu, -ABS
	05-				**CZ103**	Fte	Ø 19,05	Pla
C3 I Pluriel (HB) 5/03-10/09								
1.4 Eng.KFV(TU3JP) (54kW)	03-		R		**CF801**	Bch	Ø 20,64	Alu, +ABS
	3/03-		R		**CF520**	Luc	Ø 20,64	Alu, +ABS
	03-				**PF625**	Bch	Ø 22,20	Alu, +ABS
	3/03-				**PF507**	Luc	Ø 22,20	Alu, +ABS, -ESP
	03-				**CZ104**	Fte	Ø 19,05	Pla
1.4 HDi Eng.8HX(DV4TD) (50kW)	4/04-		R		**CF801**	Bch	Ø 20,64	Alu, +ABS
	04-				**PF625**	Bch	Ø 22,20	Alu, +ABS
	04-				**PF506**	Luc	Ø 22,20	Alu, +ABS, +ESP
	04-				**PF507**	Luc	Ø 22,20	Alu, +ABS, -ESP
	04-				**CZ104**	Fte	Ø 19,05	Pla
1.4 Hybrid Eng.KFV(TU3JP) (54kW)	03-		R		**CF801**	Bch	Ø 20,64	Alu, +ABS
	3/03-		R		**CF520**	Luc	Ø 20,64	Alu, +ABS
	03-				**PF625**	Bch	Ø 22,20	Alu, +ABS

CITROËN

		Spare Parts	F/R	L/R	FRITECH ref.		DIMENSIONS mm.	NOTE
1.4 Hybrid Eng.KFV(TU3JP) (54kW)	3/03-				**PF507**	Luc	Ø 22,20	Alu, +ABS, -ESP
	03-				**CZ104**	Fte	Ø 19,05	Pla
1.6 16v Eng.NFU(TU5JP4) (80kW)	03-				**PF625**	Bch	Ø 22,20	Alu, +ABS
	03-				**PF506**	Luc	Ø 22,20	Alu, +ABS, +ESP
	03-				**PF507**	Luc	Ø 22,20	Alu, +ABS
	03-				**CZ104**	Fte	Ø 19,05	Pla
C3 II (SC) 11/09-								
1.0 VTi Eng.EB0 (50kW)	13-		R		**CF867**	Bch	Ø 20,64	Alu
	13-				**PF918**	Bch	Ø 22,20	Alu, +ESP
	13-				**PF916**	Bch	Ø 22,20	Alu, -ESP
1.1 Eng.HFX(TU1JP) (44kW)	09-		R		**CF867**	Bch	Ø 20,64	Alu
	09-				**PF918**	Bch	Ø 22,20	Alu, +ESP
	09-				**PF916**	Bch	Ø 22,20	Alu, -ESP
1.2 VTi Eng.EB2M (60kW)	12-		R		**CF867**	Bch	Ø 20,64	Alu
	12-				**PF918**	Bch	Ø 22,20	Alu, +ESP
	12-				**PF916**	Bch	Ø 22,20	Alu, -ESP
1.4 Eng.KFT(TU3A) (54kW)	09-		R		**CF867**	Bch	Ø 20,64	Ch 12271-, Alu, Brake Drum 8Inch
	10-		R		**CF850**	Bch	Ø 20,64	Ch 12271-, Alu, Brake drum 9Inch
	13-		R		**CF867**	Bch	Ø 20,64	Alu
	09-				**PF918**	Bch	Ø 22,20	Alu, +ESP
	09-				**PF916**	Bch	Ø 22,20	Alu, -ESP
1.4 GPL (54kW)	11-				**PF916**	Bch	Ø 22,20	Alu, -ESP
1.4 HDi Eng.8HR/8HZ(DV4C/TD) (50kW)	09-		R		**CF850**	Bch	Ø 20,64	Ch 12271-, Alu, Brake drum 9Inch
	13-		R		**CF867**	Bch	Ø 20,64	Alu
	5/13-				**PF918**	Bch	Ø 22,20	Alu, +ESP
	5/13-				**PF916**	Bch	Ø 22,20	Alu, -ESP
	09-4/13				**PF792**	Trw	Ø 22,20	Alu, +ESP
	09-4/13				**PF791**	Trw	Ø 22,20	Alu, -ESP
1.4 VTi Eng.8FP(EP3/C) (70kW)	09-		R		**CF850**	Bch	Ø 20,64	Ch 12271-, Alu, Brake drum 9Inch
	09-		R		**CF867**	Bch	Ø 20,64	Ch 12271-, Alu, Brake Drum 8Inch
	13-		R		**CF867**	Bch	Ø 20,64	Alu
	09-				**PF919**	Bch	Ø 23,81	Alu, +ESP
	09-13				**PF917**	Bch	Ø 23,81	Alu, -ESP
1.4 VTi GPL Eng.EP3C (70kW)	13-		R		**CF867**	Bch	Ø 20,64	Alu
	11-				**PF918**	Bch	Ø 22,20	Alu, +ESP
	11-				**PF916**	Bch	Ø 22,20	Alu, -ESP
1.6 e-HDi Eng.DV6C (84kW)	12-		R		**CF850**	Bch	Ø 20,64	Alu, Brake drum 9Inch
	12-				**PF919**	Bch	Ø 23,81	Alu
1.6 HDi Eng.BHW (DV6FE) (55kW)	15-		R		**CF867**	Bch	Ø 20,64	Alu
1.6 HDi Eng.BHY (DV6FD) (73kW)	15-		R		**CF867**	Bch	Ø 20,64	Alu
1.6 HDi 16v Eng.9HR(DV6C) (82kW)	10-		R		**CF867**	Bch	Ø 20,64	Alu
	5/13-				**PF918**	Bch	Ø 22,20	Alu, Rear Drum Brake, +ESP
	10-				**PF919**	Bch	Ø 23,81	Alu, +ESP
	13-				**PF916**	Bch	Ø 22,20	Alu, -ESP
	10-13				**PF917**	Bch	Ø 23,81	Alu, -ESP
	10-5/13				**PF792**	Trw	Ø 22,20	Alu, Rear Drum Brake, +ESP
	10-4/13				**PF855**	Trw	Ø 23,81	Alu, Rear Disc Brake, +ESP
	10-5/13				**PF854**	Trw	Ø 23,81	Alu, Rear Disc Brake, -ESP
1.6 HDi 16v Eng.9HX/9HP(DV6ATED4/DV6DTED)	09-		R		**CF867**	Bch	Ø 20,64	Alu
(66-68kW)	09-5/13				**PF918**	Bch	Ø 22,20	Alu, Rear Drum Brake, +ESP
	09-				**PF919**	Bch	Ø 23,81	Alu, +ESP
	13-				**PF916**	Bch	Ø 22,20	Alu, -ESP
	09-13				**PF917**	Bch	Ø 23,81	Alu, -ESP
1.6 VTi Eng.5FS(EP6C) (88kW)	09-		R		**CF867**	Bch	Ø 20,64	Alu
	13-		R		**CF867**	Bch	Ø 20,64	Alu
	09-				**PF919**	Bch	Ø 23,81	Alu, +ESP
	09-13				**PF917**	Bch	Ø 23,81	Alu, -ESP
C3 Picasso 2/09-								
1.4 Eng.8FP/8FS(EP3) (70kW)	09-				**PF855**	Trw	Ø 23,81	Alu, +ABS, +ESP
	09-				**PF854**	Trw	Ø 23,81	Alu, +ABS, -ESP
1.4 Vti 95 LPG Eng.8FP(EP3) (70kW)	12-				**PF855**	Trw	Ø 23,81	Alu, +ABS, +ESP
	12-				**PF854**	Trw	Ø 23,81	Alu, +ABS, -ESP
1.6 Eng.5FS/5FW(EP6/C) (88kW)	09-				**PF855**	Trw	Ø 23,81	Alu, +ABS, +ESP
	09-				**PF854**	Trw	Ø 23,81	Alu, +ABS, -ESP

		Spare Parts	F/R	L/R	FRITECH ref.		DIMENSIONS mm.	NOTE
1.6 HDi Eng.9HL(DV6C) (84kW)	12-				**PF855**	Trw	Ø 23,81	Alu, +ABS, +ESP
	12-				**PF854**	Trw	Ø 23,81	Alu, +ABS, -ESP
1.6 HDi Eng.9HP(DV6DTED) (68kW)	10-				**PF855**	Trw	Ø 23,81	Alu, +ABS, +ESP
	10-				**PF854**	Trw	Ø 23,81	Alu, +ABS, -ESP
1.6 HDi Eng.9HX(DV6ATED4) (66kW)	09-				**PF855**	Trw	Ø 23,81	Alu, +ABS, +ESP
	09-				**PF854**	Trw	Ø 23,81	Alu, +ABS, -ESP
1.6 HDi Eng.9HZ(DV6TED4)/9HR(DV6C)	09-				**PF855**	Trw	Ø 23,81	Alu, +ABS, +ESP
(80-82kW)	09-				**PF854**	Trw	Ø 23,81	Alu, +ABS, -ESP
C4 Cactus 7/14-								
1.2 THP Eng.EB2DT (81kW)	14-		R		**CF867**	Bch	Ø 20,64	Alu, Rear Drum Brake
	14-				**PF792**	Trw	Ø 22,20	Alu, Rear Drum Brake
	14-				**PF855**	Trw	Ø 23,81	Alu, Rear Disc Brake
1.2 VTi Eng.EB2/EB2F (60kW)	14-		R		**CF867**	Bch	Ø 20,64	Alu, Rear Drum Brake
	14-				**PF792**	Trw	Ø 22,20	Alu, Rear Drum Brake
	14-				**PF855**	Trw	Ø 23,81	Alu, Rear Disc Brake
1.2 VTi Eng.EB2D (55kW)	14-		R		**CF867**	Bch	Ø 20,64	Alu, Rear Drum Brake
	14-				**PF792**	Trw	Ø 22,20	Alu, Rear Drum Brake
	14-				**PF855**	Trw	Ø 23,81	Alu, Rear Disc Brake
1.6 HDi Eng.DV6DTED (68kW)	14-		R		**CF867**	Bch	Ø 20,64	Alu, Rear Drum Brake
	14-				**PF792**	Trw	Ø 22,20	Alu, Rear Drum Brake
	14-				**PF855**	Trw	Ø 23,81	Alu, Rear Disc Brake
1.6 HDi Eng.DV6FD (73kW)	14-		R		**CF867**	Bch	Ø 20,64	Alu, Rear Drum Brake
	14-				**PF792**	Trw	Ø 22,20	Alu, Rear Drum Brake
	14-				**PF855**	Trw	Ø 23,81	Alu, Rear Disc Brake
C4 I, Coupe (LC, LA) 11/04-10/10								
1.4 16v Eng.KFU(ET3J4) (65kW)	04-				**PF798**	Bch	Ø 23,81	Alu, +ABS, +ESP
	04-				**PF873**	Bch	Ø 23,81	Ch 11193-, Alu, +ABS, -ESP
	04-				**CZ104**	Fte	Ø 19,05	Pla
	04-				**PZ116**	Fte	Ø 15,87	Pla
1.6 16v Eng.NFU(TU5JP4) (80kW)	04-				**PF798**	Bch	Ø 23,81	Ch -11192, Alu, +ABS, +ESP
	04-				**CZ103**	Fte	Ø 19,05	Pla
	04-				**PZ116**	Fte	Ø 15,87	Pla
1.6 16v (Exc. Coupe) Eng.NFU(TU5JP4) (80kW)	07-				**CZ104**	Fte	Ø 19,05	Pla
	07-				**PZ116**	Fte	Ø 15,87	Pla
1.6 16v HDi Eng.9HY/9HZ(DV6TED4) (80kW)	04-				**PF798**	Bch	Ø 23,81	Ch -11192, Alu, +ABS, +ESP
	04-				**PF873**	Bch	Ø 23,81	Ch 11193-, Alu, +ABS, -ESP
1.6 HDi Eng.9HX(DV6ATED4) (66kW)	04-				**PF798**	Bch	Ø 23,81	Alu, +ABS, +ESP
	04-				**PF873**	Bch	Ø 23,81	Ch 11193-, Alu, +ABS, -ESP
	04-				**CZ103**	Fte	Ø 19,05	Pla
2.0 16v Eng.RFJ(EW10A) (103kW)	04-				**PF798**	Bch	Ø 23,81	Ch -11192, Alu, +ABS, +ESP
	04-				**CZ103**	Fte	Ø 19,05	Pla
	04-				**PZ115**	Fte	Ø 15,87	Pla
2.0 16v Eng.RFK(EW10J4S) (130kW)	04-				**CZ103**	Fte	Ø 19,05	Pla
	04-				**PZ115**	Fte	Ø 15,87	Pla, LHD
2.0 16v Eng.RFN(EW10J4) (100kW)	04-				**PF798**	Bch	Ø 23,81	Ch -11192, Alu, +ABS, +ESP
	04-				**CZ103**	Fte	Ø 19,05	Pla
	04-				**PZ115**	Fte	Ø 15,87	Pla
2.0 HDi Eng.RHF(DW10BTED4) (103kW)	08-				**PZ115**	Fte	Ø 15,87	Ch -11791, Pla
2.0 HDi 16v Eng.RHR(DW10BTED4) (100kW)	04-				**PF798**	Bch	Ø 23,81	Ch -11192, Alu, +ABS, +ESP
	04-				**CZ103**	Fte	Ø 19,05	Pla
	04-				**PZ115**	Fte	Ø 15,87	Pla
C4 II (B71) 11/10-								
1.4 VTi Eng.8FP(EP3) (70kW)	10-				**PF798**	Bch	Ø 23,81	Alu, +ABS, +ESP
	10-				**PF873**	Bch	Ø 23,81	Alu, +ABS, -ESP
1.6 e-HDi Eng.9HR(DV6C) (84kW)	12-				**PF798**	Bch	Ø 23,81	Alu, +ABS, +ESP
	12-				**PF873**	Bch	Ø 23,81	Alu, +ABS, -ESP
1.6 HDi Eng.9HJ/9HP(DV6DTED/M) (68kW)	10-				**PF798**	Bch	Ø 23,81	Alu, +ABS, +ESP
	10-				**PF873**	Bch	Ø 23,81	Alu, +ABS, -ESP
1.6 HDi Eng.9HR(DV6C) (82kW)	10-				**PF798**	Bch	Ø 23,81	Alu, +ABS, +ESP
	10-				**PF873**	Bch	Ø 23,81	Alu, +ABS, -ESP
1.6 THP Eng.5FV(EP6CDT) (115kW)	10-				**PF798**	Bch	Ø 23,81	Alu, +ABS, +ESP
	10-				**PF873**	Bch	Ø 23,81	Alu, +ABS, -ESP
1.6 Vti Eng.5FS(EP6C) (88kW)	10-				**PF798**	Bch	Ø 23,81	Alu, +ABS, +ESP
	10-				**PF873**	Bch	Ø 23,81	Alu, +ABS, -ESP

CITROËN

		Spare Parts	F/R	L/R	FRITECH ref.		DIMENSIONS mm.	NOTE
1.6 VTi LPG Eng.5FS(EP6C) (88kW)	11-				**PF798**	Bch	Ø 23,81	Alu, +ABS, +ESP
	11-				**PF873**	Bch	Ø 23,81	Alu, +ABS, -ESP
2.0 HDi Eng.DW10CTED4 (110kW)	10-				**PF798**	Bch	Ø 23,81	Alu, +ABS, +ESP
	10-				**PF873**	Bch	Ø 23,81	Alu, +ABS, -ESP
C5 I, Break (DC, DE) 3/01-9/04								
1.8 16v Eng.6FZ(EW7J4) (85kW)	01-				**CZ103**	Fte	Ø 19,05	Pla
2.0 16v Eng.RFN(EW10J4) (100kW)	01-				**CZ103**	Fte	Ø 19,05	Pla
2.0 16v HPi Eng.RLZ(EW10D) (103kW)	01-				**CZ103**	Fte	Ø 19,05	Pla
2.0 HDi Eng.RHY(DW10TD) (66kW)	01-04				**CZ103**	Fte	Ø 19,05	Pla
C5 II, Break (RC, RE) 9/04-3/08								
1.6 16v HDi Eng.9HY(DV6TED4) (80kW)	04-				**CZ103**	Fte	Ø 19,05	Pla
1.8 16v Eng.6FY-EW7A (92kW)	04-				**CZ103**	Fte	Ø 19,05	Pla
1.8 16v Eng.6FZ(EW7J4) (85kW)	04-				**CZ103**	Fte	Ø 19,05	Pla
2.0 16v Eng.RFJ(EW10A) (103kW)	04-				**CZ103**	Fte	Ø 19,05	Pla
2.0 HDi 16v Eng.RHR(DW10BTED4) (100kW)	04-				**CZ103**	Fte	Ø 19,05	Pla
2.2 HDi Eng.4HX(DW12ATED4/FAP) (98kW)	04-				**CZ103**	Fte	Ø 19,05	Pla
C8 (EA, EB) 7/02-12/14								
2.0 16v Eng.RFJ(EW10A) (103kW)	05-				**CZ103**	Fte	Ø 19,05	Pla
	05-				**PZ130**	Fte	Ø 19,05	Alu
2.0 16v Eng.RFN(EW10J4) (100kW)	02-				**CZ103**	Fte	Ø 19,05	Pla
	02-				**PZ130**	Fte	Ø 19,05	Alu
2.0 HDi Eng.RHM/RHT/RHW(DW10ATED4) (79kW)	7/02-				**PZ130**	Fte	Ø 19,05	Alu
2.2 Eng.3FZ(EW12J4) (116kW)	02-				**CZ103**	Fte	Ø 19,05	Pla
	7/02-				**PZ130**	Fte	Ø 19,05	Alu
2.2 HDi Eng.4HW(DW12TED4) (94kW)	7/02-				**PZ130**	Fte	Ø 19,05	Alu
C-Elysee 11/12-								
1.2 VTi (53kW)	12-		R	L	**CF061**	Bdx	Ø 20,64	CRCI, -ABS
	12-		R	R	**CF062**	Bch	Ø 20,64	CRCI, -ABS
	12-		R		**CF921**	Bch	Ø 20,64	Alu, +ABS
1.2 VTi (60kW)	14-		R	L	**CF061**	Bdx	Ø 20,64	CRCI, -ABS
	14-		R	R	**CF062**	Bch	Ø 20,64	CRCI, -ABS
	14-		R		**CF921**	Bch	Ø 20,64	Alu, +ABS
1.6 BlueHDi Eng.BHY (DV6FD) (73kW)	14-		R	L	**CF061**	Bdx	Ø 20,64	CRCI, -ABS
	14-		R	R	**CF062**	Bch	Ø 20,64	CRCI, -ABS
	14-		R		**CF921**	Bch	Ø 20,64	Alu, +ABS
1.6 HDi Eng.9HJ(DV6DTEDM) (68kW)	12-		R	L	**CF061**	Bdx	Ø 20,64	CRCI, -ABS
	12-		R	R	**CF062**	Bch	Ø 20,64	CRCI, -ABS
	12-		R		**CF921**	Bch	Ø 20,64	Alu, +ABS
1.6 VTi Eng.NFP(EC5) (85kW)	12-		R	L	**CF061**	Bdx	Ø 20,64	CRCI, -ABS
	12-		R	R	**CF062**	Bch	Ø 20,64	CRCI, -ABS
	12-		R		**CF921**	Bch	Ø 20,64	Alu, +ABS
C-Zero 10/10-								
Electric Eng.Y4F1 (35-47kW)	10-		R		**CF826**		Ø 19,05	
DS3 11/09-								
1.2 VTI, Cabrio Eng.EB2 (60kW)	12-		R		**CF850**	Bch	Ø 20,64	Alu, Brake drum 9Inch
	12-				**PF918**	Bch	Ø 22,20	Alu
1.4 16v Eng.8FP(EP3) (70-72kW)	10-		R		**CF850**	Bch	Ø 20,64	Ch 12271-, Alu, Brake drum 9Inch
	10-		R		**CF867**	Bch	Ø 20,64	Ch 12271-, Alu, Brake Drum 8Inch
	10-10/11				**PF919**	Bch	Ø 23,81	Alu, +ESP
	5/13-				**PF918**	Bch	Ø 22,20	Alu
	6/12-5/13				**PF792**	Trw	Ø 22,20	Alu
1.4 HDi Eng.8HR(DV4C) (50kW)	10-		R		**CF850**	Bch	Ø 20,64	Ch 12271-, Alu, Brake drum 9Inch
	10-		R		**CF867**	Bch	Ø 20,64	Ch 12271-, Alu, Brake Drum 8Inch
	10-				**PF919**	Bch	Ø 23,81	Alu, +ESP
	5/13-				**PF918**	Bch	Ø 22,20	Alu
	10-5/13				**PF792**	Trw	Ø 22,20	Alu
1.4 VTi Eng.8FR(EP3C) (70kW)	11-		R		**CF850**	Bch	Ø 20,64	Alu, Brake drum 9Inch
	11-		R		**CF867**	Bch	Ø 20,64	Alu
	11-				**PF918**	Bch	Ø 22,20	Alu
	11-				**PF919**	Bch	Ø 23,81	Ch -12774, Alu
	11-				**PF792**	Trw	Ø 22,20	Ch 12999-13341, Alu, +ABS, +ESP
1.6 16v, Cabrio Eng.5FR(EP6DT) (115kW)	10-		R		**CF850**	Bch	Ø 20,64	Ch 12271-, Alu, Brake drum 9Inch
	10-		R		**CF867**	Bch	Ø 20,64	Ch 12271-, Alu, Brake Drum 8Inch
	10-				**PF919**	Bch	Ø 23,81	Alu

		Spare Parts	F/R	L/R	FRITECH ref.		DIMENSIONS mm.	NOTE
1.6 16v, Cabrio Eng.5FS(EP6C) (88kW)	10-		R		**CF850**	Bch	Ø 20,64	Alu, Brake drum 9Inch
	4/10-				**PF919**	Bch	Ø 23,81	Alu
1.6 e-HDi Eng.9HL(DV6C) (84kW)	12-		R		**CF850**	Bch	Ø 20,64	Alu, Brake drum 9Inch
	12-		R		**CF867**	Bch	Ø 20,64	Alu
	12-				**PF919**	Bch	Ø 23,81	Alu
	12-				**PF792**	Trw	Ø 22,20	Ch 12999-13341, Alu, +ABS, +ESP
1.6 HDi Eng.9HR(DV6C) (82kW)	09-		R		**CF850**	Bch	Ø 20,64	Ch 12271-, Alu, Brake drum 9Inch
	09-		R		**CF867**	Bch	Ø 20,64	Ch 12271-, Alu, Brake Drum 8Inch
	09-				**PF919**	Bch	Ø 23,81	Alu, +ESP
1.6 HDi, Cabrio Eng.9HP(DV6DTED) (68kW)	09-		R		**CF850**	Bch	Ø 20,64	Ch 12271-, Alu, Brake drum 9Inch
	09-		R		**CF867**	Bch	Ø 20,64	Ch 12271-, Alu, Brake Drum 8Inch
	09-				**PF919**	Bch	Ø 23,81	Alu, +ESP
1.6 T THP Racing, Cabrio Eng.5FU(EP6CDTX)	10-		R		**CF850**	Bch	Ø 20,64	Ch 12271-, Alu, Brake drum 9Inch
(149kW)	10-		R		**CF867**	Bch	Ø 20,64	Ch 12271-, Alu, Brake Drum 8Inch
	10-				**PF919**	Bch	Ø 23,81	Alu, +ESP
1.6 THP Racing, Cabrio Eng.5FD(EP6DTS)	11-		R		**CF850**	Bch	Ø 20,64	Alu, Brake drum 9Inch
(152kW)	11-		R		**CF867**	Bch	Ø 20,64	Alu
DS4 4/11-								
1.6 e-HDi Eng.9HR(DV6C) (81-82kW)	11-				**PF798**	Bch	Ø 23,81	Alu, +ABS, +ESP
	11-				**PF873**	Bch	Ø 23,81	Alu, +ABS, -ESP
1.6 T THP Eng.5FV(EP6CDT) (115kW)	11-				**PF798**	Bch	Ø 23,81	Alu, +ABS, +ESP
	11-				**PF873**	Bch	Ø 23,81	Alu, +ABS, -ESP
1.6 VTi Eng.5FS(EP6C) (88kW)	11-				**PF798**	Bch	Ø 23,81	Alu, +ABS, +ESP
	11-				**PF873**	Bch	Ø 23,81	Alu, +ABS, -ESP
2.0 HDi Eng.RHH(DW10CTED4) (120kW)	11-				**PF798**	Bch	Ø 23,81	Alu, +ABS, +ESP
	11-				**PF873**	Bch	Ø 23,81	Alu, +ABS, -ESP
Dyane 8/67-10/84								
0.4 Eng.A79-1(AYA2) (17kW)	6/70-		F		**CF203**		Ø 28,57	
	68-6/70		F		**CF381**		Ø 28,60	
	1/70-6/70		R		**CF349**		Ø 17,46	
	6/70-		R		**CF350**		Ø 17,46	
	68-1/70		R		**CF382**		Ø 19,05	
	6/70-75				**PF056**		Ø 19,05	
	75-				**PF057**		Ø 20,64	
0.6 Eng.M28(AM2) (22kW)	6/70-7/77		F		**CF203**		Ø 28,57	
	1/68-6/70		F		**CF381**		Ø 28,60	
	3/70-6/70		R		**CF349**		Ø 17,46	
	6/70-7/77		R		**CF350**		Ø 17,46	
	1/68-3/70		R		**CF382**		Ø 19,05	
	6/70-7/76				**PF056**		Ø 19,05	
	7/76-7/77				**PF057**		Ø 20,64	
0.6 Eng.M28-1(AK2) (24kW)	72-7/77		F		**CF203**		Ø 28,57	
	72-7/77		R		**CF350**		Ø 17,46	
	72-7/76				**PF056**		Ø 19,05	
	7/76-7/77				**PF057**		Ø 20,64	
Evasion (22,U6) 6/94-7/02								
1.8i Eng.LFZ(XU7JP) (74kW)	97-		R		**CF094**		Ø 19,05	-ABS
	97-				**PF196**	Bdx	Ø 22,20	+ABS
	97-				**PF197**	Bdx	Ø 22,20	-ABS
1.9 TD Eng.D8B(XUD9TF) (68kW)	97-		R		**CF094**		Ø 19,05	-ABS
	97-				**PF217**		Ø 23,81	+ABS
	97-				**PF218**		Ø 23,81	-ABS
1.9 TD Eng.DHX/D8B(XUD9TF/BTF) (66kW)	6/94-		R		**CF094**		Ø 19,05	-ABS
	6/94-				**PF217**		Ø 23,81	+ABS
	6/94-				**PF218**		Ø 23,81	-ABS
2.0 Eng.RFU(XU10J2C) (89kW)	6/94-		R		**CF094**		Ø 19,05	-ABS
	6/94-				**PF217**		Ø 23,81	+ABS
	6/94-				**PF218**		Ø 23,81	-ABS
2.0 16v Eng.RFN(EW10J4) (100kW)	00-02				**PF464**	Bch	Ø 23,81	+ABS
	00-02				**PF429**	Bch	Ø 23,81	-ABS
2.0 HDi Eng.RHW/RHZ(DW10ATED) (80kW)	99-02		R		**CF094**		Ø 19,05	-ABS
	10/99-02				**PF385**	Bch	Ø 22,20	+ABS
	10/99-02				**PF464**	Bch	Ø 23,81	+ABS
	10/99-02				**PF429**	Bch	Ø 23,81	-ABS

CITROËN

		Spare Parts	F/R	L/R	FRITECH ref.		DIMENSIONS mm.	NOTE
2.0 HDi Eng.RHW/RHZ(DW10ATED) (80kW)	8/99-7/02				**PZ130**	Fte	Ø 19,05	Alu
2.0 i 16v Eng.RFV(XU10J4R) (97kW)	98-00				**PF217**		Ø 23,81	+ABS
	98-00				**PF218**		Ø 23,81	-ABS
2.0 T. Eng.RGX(XU10J2TE) (108kW)	6/94-				**PF217**		Ø 23,81	+ABS
	6/94-				**PF218**		Ø 23,81	-ABS
2.1 TD 12v Eng.P8C(XUD11BTE) (80kW)	3/96-		R		**CF094**		Ø 19,05	-ABS
	3/96-				**PF217**		Ø 23,81	+ABS
	3/96-				**PF218**		Ø 23,81	-ABS
LN 9/76-7/79								
3 CV Eng.M28(AM2) (25kW)	9/76-10/77		R	L	**CF114**	Bdx	Ø 23,80	
	9/76-10/77		R	L	**CF012**	Luc	Ø 22,22	
	9/76-10/77		R	R	**CF115**	Bdx	Ø 23,80	
	9/76-10/77		R	R	**CF013**	Luc	Ø 22,22	
	10/77-7/79		R		**CF031**	Bdx	Ø 22,00	
	10/77-7/79		R		**CF056**	Luc	Ø 22,00	
	9/76-7/79				**PF080**		Ø 19,05	
LNA 11/76-10/86								
0.6 Eng.V06-630 (26kW)	10/81-		R		**CF018**	Bdx	Ø 20,64	Sys.Front Citroen
	10/78-82		R		**CF031**	Bdx	Ø 22,00	Sys.Front Bdx
	10/78-82		R		**CF056**	Luc	Ø 22,00	Sys.Front Bdx
	78-				**PF085**	Bdx	Ø 17,46	LHD/RHD
0.6 Eng.V06-644 (25kW)	7/82-		R		**CF018**	Bdx	Ø 20,64	Sys.Front Citroen
	-6/82		R		**CF031**	Bdx	Ø 22,00	Sys.Front Bdx
	-6/82		R		**CF056**	Luc	Ø 22,00	Sys.Front Bdx
	82-				**PF085**	Bdx	Ø 17,46	LHD/RHD
0.95 Eng.108C (33kW)	1/84-86		R		**CF018**	Bdx	Ø 20,64	Sys.Front Citroen
	1/84-86		R		**CF426**	Luc	Ø 20,64	Sys.Front Citroen
	1/84-86				**PF085**	Bdx	Ø 17,46	
1.1 Eng.109-5E (37kW)	7/82-85		R		**CF018**	Bdx	Ø 20,64	Sys.Front Citroen
	7/82-85		R		**CF426**	Luc	Ø 20,64	Sys.Front Citroen
	7/82-85				**PF085**	Bdx	Ø 17,46	
Mehari 5/68-10/87								
0.6 Eng.M28-1(AK2) (19kW)	1/72-7/77		F		**CF203**		Ø 28,57	
	6/68-1/72		F		**CF381**		Ø 28,60	
	1/72-7/77		R		**CF350**		Ø 17,46	
	6/68-1/72		R		**CF349**		Ø 17,46	
	1/72-7/76				**PF056**		Ø 19,05	
	7/76-7/77				**PF057**		Ø 20,64	
Saxo (S0,S1) 5/96-4/04								
0.95 Eng.CDY/ CDZ(TU9M) (33-37kW)	3/96-		R	L	**CF083**	Bdx	Ø 19,05	CRCI, Sys.Front Bdx, -ABS, 4 Hole
	96-		R	L	**CF077**	Bdx	Ø 19,05	CRCI, Sys.Front ATE, -ABS, 3 Hole
	3/96-		R	R	**CF084**	Bdx	Ø 19,05	CRCI, Sys.Front Bdx, -ABS, 4 Hole
	96-		R	R	**CF078**	Bdx	Ø 19,05	CRCI, Sys.Front ATE, -ABS, 3 Hole
	96-		R		**CF159**	Luc	Ø 20,64	Ch -8095, +ABS
			R		**CF162**	Luc	Ø 20,64	Ch 8096-, Alu, +ABS
	96-				**PF270**	Ate	Ø 20,64	Alu, Sys.Front ATE, -ABS
	3/96-				**PF227**	Bdx	Ø 19,05	Sys.Front Bdx, -ABS, 4 Hole
	96-				**PF213**	Bdx	Ø 20,64	Alu, Sys.Front ATE, -ABS, 3 Hole
	96-				**PF266**	Luc	Ø 20,64	Alu, +ABS
1.1 Eng.HDZ(TU1M) (40kW)	3/96-		R	L	**CF083**	Bdx	Ø 19,05	CRCI, Sys.Front Bdx, -ABS, 4 Hole
	96-		R	L	**CF077**	Bdx	Ø 19,05	CRCI, Sys.Front ATE, -ABS, 3 Hole
	3/96-		R	R	**CF084**	Bdx	Ø 19,05	CRCI, Sys.Front Bdx, -ABS, 4 Hole
	96-		R	R	**CF078**	Bdx	Ø 19,05	CRCI, Sys.Front ATE, -ABS, 3 Hole
	96-		R		**CF159**	Luc	Ø 20,64	Ch -8095, +ABS
			R		**CF162**	Luc	Ø 20,64	Ch 8096-, Alu, +ABS
	96-				**PF270**	Ate	Ø 20,64	Alu, Sys.Front ATE, -ABS
	3/96-				**PF227**	Bdx	Ø 19,05	Sys.Front Bdx, -ABS, 4 Hole
	96-				**PF213**	Bdx	Ø 20,64	Alu, Sys.Front ATE, -ABS, 3 Hole
	96-				**PF266**	Luc	Ø 20,64	Alu, +ABS
1.1 Eng.HDZ(TU1M)/HFX(TU1JP) (44kW)	3/96-		R	L	**CF083**	Bdx	Ø 19,05	CRCI, Sys.Front Bdx, -ABS, 4 Hole
	96-		R	L	**CF077**	Bdx	Ø 19,05	CRCI, Sys.Front ATE, -ABS, 3 Hole
	3/96-		R	R	**CF084**	Bdx	Ø 19,05	CRCI, Sys.Front Bdx, -ABS, 4 Hole
	96-		R	R	**CF078**	Bdx	Ø 19,05	CRCI, Sys.Front ATE, -ABS, 3 Hole
	96-		R		**CF159**	Luc	Ø 20,64	Ch -8095, +ABS

		Spare Parts	F/R	L/R	FRITECH ref.		DIMENSIONS mm.	NOTE
1.1 Eng.HDZ(TU1M)/HFX(TU1JP) (44kW)			R		**CF162**	Luc	Ø 20,64	Ch 8096-, Alu, +ABS
	96-				**PF270**	Ate	Ø 20,64	Alu, Sys.Front ATE, -ABS
	3/96-				**PF227**	Bdx	Ø 19,05	Sys.Front Bdx, -ABS, 4 Hole
	96-				**PF213**	Bdx	Ø 20,64	Alu, Sys.Front ATE, -ABS, 3 Hole
	96-				**PF266**	Luc	Ø 20,64	Alu, +ABS
1.4 VTS Eng.KFX/ KFW(TU3JP) (55kW)	96-		R	L	**CF083**	Bdx	Ø 19,05	CRCI, Sys.Front Bdx, -ABS, 4 Hole
	96-		R	R	**CF084**	Bdx	Ø 19,05	CRCI, Sys.Front Bdx, -ABS, 4 Hole
	96-		R		**CF159**	Luc	Ø 20,64	Ch -8095, +ABS
			R		**CF162**	Luc	Ø 20,64	Ch 8096-, Alu, +ABS
	96-				**PF270**	Ate	Ø 20,64	Alu, -ABS
	96-				**PF227**	Bdx	Ø 19,05	-ABS, 4 Hole
	96-				**PF266**	Luc	Ø 20,64	Alu, +ABS
1.5 D Eng.VJY/ VJZ(TUD5) (40-42-43kW)	96-		R	L	**CF083**	Bdx	Ø 19,05	CRCI, Sys.Front Bdx, -ABS, 4 Hole
	96-		R	R	**CF084**	Bdx	Ø 19,05	CRCI, Sys.Front Bdx, -ABS, 4 Hole
	96-		R		**CF159**	Luc	Ø 20,64	Ch -8095, +ABS
			R		**CF162**	Luc	Ø 20,64	Ch 8096-, Alu, +ABS
	96-				**PF270**	Ate	Ø 20,64	Alu, -ABS
	96-				**PF227**	Bdx	Ø 19,05	-ABS, 4 Hole
	96-				**PF266**	Luc	Ø 20,64	Alu, +ABS
1.6 VTL,VTR Eng.NFZ(TU5JP) (65kW)	96-		R	L	**CF083**	Bdx	Ø 19,05	CRCI, Sys.Front Bdx, -ABS, 4 Hole
	96-		R	R	**CF084**	Bdx	Ø 19,05	CRCI, Sys.Front Bdx, -ABS, 4 Hole
	96-		R		**CF159**	Luc	Ø 20,64	Ch -8095, +ABS
			R		**CF162**	Luc	Ø 20,64	Ch 8096-, Alu, +ABS
	96-04				**PF571**	Ate	Ø 22,20	Alu, +ABS
	96-				**PF270**	Ate	Ø 20,64	Alu, -ABS
	96-				**PF213**	Bdx	Ø 20,64	Alu, -ABS
	96-				**PF266**	Luc	Ø 20,64	Alu, +ABS
1.6 VTS Eng.NFT(TU5JP) (74kW)	00-04				**PF571**	Ate	Ø 22,20	Alu, +ABS
	00-03				**PF270**	Ate	Ø 20,64	Alu, -ABS
	00-03				**PF213**	Bdx	Ø 20,64	Alu, -ABS
	00-03				**PF266**	Luc	Ø 20,64	Alu, Exc. Mod. VT3, +ABS
1.6 VTS Eng.NFX(TU5JP4) (87kW)	96-04				**PF571**	Ate	Ø 22,20	Alu, +ABS
	96-				**PF270**	Ate	Ø 20,64	Alu, -ABS
	96-				**PF213**	Bdx	Ø 20,64	Alu, -ABS
Visa 9/78-3/91								
0.6 Eng.V06-644 (25kW)	10/78-86		R		**CF018**	Bdx	Ø 20,64	Sys.Front Citroen
	10/78-86		R		**CF031**	Bdx	Ø 22,00	Sys.Front Bdx
	10/78-86		R		**CF426**	Luc	Ø 20,64	Sys.Front Citroen
	10/78-86		R		**CF056**	Luc	Ø 22,00	Sys.Front Bdx
	10/78-86				**PF085**	Bdx	Ø 17,46	Sys.Front Citroen
	10/78-86				**PF080**		Ø 19,05	Sys.Front Bdx, LHD
0.95 Eng.XV8-TU9 (33kW)	84-88		R		**CF031**	Bdx	Ø 22,00	
	84-88		R		**CF056**	Luc	Ø 22,00	
	84-88				**PF085**	Bdx	Ø 17,46	
1.1 E Eng.109K (35kW)	6/81-7/82		R		**CF031**	Bdx	Ø 22,00	
	6/81-7/82		R		**CF056**	Luc	Ø 22,00	
	6/81-7/82				**PF083**		Ø 19,05	
1.1 E, Cabriolet Eng.109-5F (36-37kW)	7/83-86		R		**CF031**	Bdx	Ø 22,00	
	7/83-86		R		**CF056**	Luc	Ø 22,00	
	7/83-86				**PF085**	Bdx	Ø 17,46	Sys.Front Citroen
	7/83-86				**PF083**		Ø 19,05	
1.2 II Super X Eng.129-5 (47kW)	5/81-7/82		R		**CF031**	Bdx	Ø 22,00	
	5/81-7/82		R		**CF056**	Luc	Ø 22,00	
	5/81-7/82				**PF083**		Ø 19,05	
1.4 Eng.150D(XY7) (44kW)	7/84-86		R		**CF031**	Bdx	Ø 22,00	
	7/84-86		R		**CF056**	Luc	Ø 22,00	
	10/84-86				**PF002**	Bdx	Ø 20,64	
	7/84-9/84				**PF083**		Ø 19,05	
1.4 GT Eng.150B(XY8) (58kW)	7/82-86		R		**CF031**	Bdx	Ø 22,00	
	7/82-86		R		**CF056**	Luc	Ø 22,00	
	10/84-86				**PF002**	Bdx	Ø 20,64	
	7/82-9/84				**PF083**		Ø 19,05	
1.6 GTI Eng.180A(XU5J) (76kW)	1/85-86		R		**CF103**		Ø 22,00	
	1/85-86				**PF002**	Bdx	Ø 20,64	

		Spare Parts	F/R	L/R	FRITECH ref.		DIMENSIONS mm.	NOTE
1.8 D Eng.161A(XUD7) (44kW)	4/84-86		R		**CF103**		Ø 22,00	
	4/84-86				**PF002**	Bdx	Ø 20,64	
Xsara (N1/0), Coupe 4/97-5/05								
1.4 HDi Eng.8HX(DV4TD) (50kW)	03-		R		**CF162**	Luc	Ø 20,64	Alu
	03-				**PF606**	Ate	Ø 23,81	Alu, +ABS, +ESP
					PF601	Ate	Ø 23,81	Ch 09002-, Alu, +ABS, -ESP
					PF573	Ate	Ø 23,81	Ch 09002-, Alu, -ABS
	03-				**PF268**	Bdx	Ø 23,81	Ch -09001, Alu, +ABS
	03-				**PF272**	Bdx	Ø 23,81	Ch -09001, Alu, -ABS
1.4 i Eng.KFX/ KFW(TU3JP) (55kW)	97-		R	L	**CF061**	Bdx	Ø 20,64	CRCI, -ABS
	97-		R	L	**CF043**	Luc	Ø 20,64	CRCI, -ABS
	97-		R	R	**CF062**	Bdx	Ø 20,64	CRCI, -ABS
	97-		R	R	**CF042**	Luc	Ø 20,64	CRCI, -ABS
	97-		R		**CF159**	Luc	Ø 20,64	Ch -08210, +ABS
			R		**CF162**	Luc	Ø 20,64	Ch 08211-, Alu, +ABS
	00-				**PF606**	Ate	Ø 23,81	Alu, +ABS, +ESP
	97-8/00				**PF243**	Ate	Ø 22,20	Alu, +ABS, -ESP
					PF601	Ate	Ø 23,81	Ch 09002-, Alu, +ABS, -ESP
	97-8/00				**PF269**	Ate	Ø 22,20	Alu, -ABS
					PF573	Ate	Ø 23,81	Ch 09002-, Alu, -ABS
	97-8/00				**PF274**	Bch	Ø 22,20	Alu, +ABS
	6/00-				**PF268**	Bdx	Ø 23,81	Ch -09001, Alu, +ABS
	00-				**PF272**	Bdx	Ø 23,81	Ch -09001, Alu, -ABS
1.5 D Eng.VJZ(TUD5) (42kW)	97-		R	L	**CF061**	Bdx	Ø 20,64	CRCI, -ABS
	97-		R	L	**CF043**	Luc	Ø 20,64	CRCI, -ABS
	97-		R	R	**CF062**	Bdx	Ø 20,64	CRCI, -ABS
	97-		R	R	**CF042**	Luc	Ø 20,64	CRCI, -ABS
	97-		R		**CF159**	Luc	Ø 20,64	Ch -08210, +ABS
			R		**CF162**	Luc	Ø 20,64	Ch 08211-, Alu, +ABS
	97-8/00				**PF243**	Ate	Ø 22,20	Alu, +ABS, -ESP
	97-8/00				**PF269**	Ate	Ø 22,20	Alu, -ABS
	97-8/00				**PF274**	Bch	Ø 22,20	Alu, +ABS
1.6 16v Eng.NFU(TU5JP4) (80kW)	00-				**PF606**	Ate	Ø 23,81	Alu, +ABS, +ESP
					PF601	Ate	Ø 23,81	Ch 09002-, Alu, +ABS, -ESP
					PF573	Ate	Ø 23,81	Ch 09002-, Alu, -ABS
	6/00-				**PF268**	Bdx	Ø 23,81	Ch -09001, Alu, +ABS
	00-				**PF272**	Bdx	Ø 23,81	Ch -09001, Alu, -ABS
1.6 i Eng.NFZ(TU5JP) (65kW)	97-00		R	L	**CF061**	Bdx	Ø 20,64	CRCI, -ABS
	97-00		R	L	**CF043**	Luc	Ø 20,64	CRCI, -ABS
	97-00		R	R	**CF062**	Bdx	Ø 20,64	CRCI, -ABS
	97-00		R	R	**CF042**	Luc	Ø 20,64	CRCI, -ABS
	97-		R		**CF159**	Luc	Ø 20,64	Ch -08210, +ABS
	-00		R		**CF162**	Luc	Ø 20,64	Ch 08211-, Alu, +ABS
	97-8/00				**PF243**	Ate	Ø 22,20	Alu, +ABS, -ESP
	97-8/00				**PF269**	Ate	Ø 22,20	Alu, -ABS
	97-8/00				**PF274**	Bch	Ø 22,20	Alu, +ABS
	6/00-				**PF268**	Bdx	Ø 23,81	Ch -09001, Alu, +ABS
1.8 D Eng.A9A(XUD7) (43kW)	97-00		R	L	**CF061**	Bdx	Ø 20,64	CRCI, -ABS
	97-00		R	L	**CF043**	Luc	Ø 20,64	CRCI, -ABS
	97-00		R	R	**CF062**	Bdx	Ø 20,64	CRCI, -ABS
	97-00		R	R	**CF042**	Luc	Ø 20,64	CRCI, -ABS
	97-		R		**CF159**	Luc	Ø 20,64	Ch -08210, +ABS
	-00		R		**CF162**	Luc	Ø 20,64	Ch 08211-, Alu, +ABS
	97-00				**PF243**	Ate	Ø 22,20	Alu, +ABS, -ESP
	97-00				**PF269**	Ate	Ø 22,20	Alu, -ABS
	97-00				**PF274**	Bch	Ø 22,20	Alu, +ABS
1.8 i Aut. Eng.LFZ(XU7JP) (74kW)	97-00		R	L	**CF061**	Bdx	Ø 20,64	CRCI, -ABS
	97-00		R	L	**CF043**	Luc	Ø 20,64	CRCI, -ABS
	97-00		R	R	**CF062**	Bdx	Ø 20,64	CRCI, -ABS
	97-00		R	R	**CF042**	Luc	Ø 20,64	CRCI, -ABS
	97-		R		**CF159**	Luc	Ø 20,64	Ch -08210, +ABS
	-00		R		**CF162**	Luc	Ø 20,64	Ch 08211-, Alu, +ABS
	97-00				**PF243**	Ate	Ø 22,20	Alu, +ABS, -ESP
	97-00				**PF269**	Ate	Ø 22,20	Alu, -ABS

		Spare Parts	F/R	L/R	FRITECH ref.		DIMENSIONS mm.	NOTE
1.8 i Aut. Eng.LFZ(XU7JP) (74kW)	9/97-8/00				**PF274**	Bch	Ø 22,20	Alu, +ABS
	6/00-				**PF268**	Bdx	Ø 23,81	Ch -09001, Alu, +ABS
1.8i Eng.LFX(XU7JB) (66kW)	97-		R	L	**CF061**	Bdx	Ø 20,64	CRCI, -ABS
	9/97-		R	L	**CF043**	Luc	Ø 20,64	CRCI, -ABS
	97-		R	R	**CF062**	Bdx	Ø 20,64	CRCI, -ABS
	9/97-		R	R	**CF042**	Luc	Ø 20,64	CRCI, -ABS
	97-		R		**CF159**	Luc	Ø 20,64	Ch -08210, +ABS
			R		**CF162**	Luc	Ø 20,64	Ch 08211-, Alu, +ABS
	9/97-8/00				**PF243**	Ate	Ø 22,20	Alu, +ABS, -ESP
	97-8/00				**PF269**	Ate	Ø 22,20	Alu, -ABS
	9/97-8/00				**PF274**	Bch	Ø 22,20	Alu, +ABS
	6/00-				**PF268**	Bdx	Ø 23,81	Ch -09001, Alu, +ABS
1.8i 16v Eng.LFY(XU7JP4) (81kW)	97-00				**PF268**	Bdx	Ø 23,81	Alu, +ABS
	97-00				**PF272**	Bdx	Ø 23,81	Ch -09001, Alu, -ABS
1.9 D Eng.DJY(XUD9A) (50kW)	97-		R	L	**CF061**	Bdx	Ø 20,64	CRCI, -ABS
	9/97-		R	L	**CF043**	Luc	Ø 20,64	CRCI, -ABS
	97-		R	R	**CF062**	Bdx	Ø 20,64	CRCI, -ABS
	9/97-		R	R	**CF042**	Luc	Ø 20,64	CRCI, -ABS
	97-		R		**CF159**	Luc	Ø 20,64	Ch -08210, +ABS
			R		**CF162**	Luc	Ø 20,64	Ch 08211-, Alu, +ABS
	9/97-8/00				**PF243**	Ate	Ø 22,20	Alu, +ABS, -ESP
	97-8/00				**PF269**	Ate	Ø 22,20	Alu, -ABS
	9/97-8/00				**PF274**	Bch	Ø 22,20	Alu, +ABS
	6/00-				**PF268**	Bdx	Ø 23,81	Ch -09001, Alu, +ABS
1.9 D Eng.WJY(DW8B)/ WJZ(DW8) (51kW)	98-		R	L	**CF061**	Bdx	Ø 20,64	CRCI, -ABS
	98-		R	L	**CF043**	Luc	Ø 20,64	CRCI, -ABS
	98-		R	R	**CF062**	Bdx	Ø 20,64	CRCI, -ABS
	98-		R	R	**CF042**	Luc	Ø 20,64	CRCI, -ABS
	97-		R		**CF159**	Luc	Ø 20,64	Ch -08210, +ABS
			R		**CF162**	Luc	Ø 20,64	Ch 08211-, Alu, +ABS
	00-				**PF606**	Ate	Ø 23,81	Alu, +ABS, +ESP
	98-8/00				**PF243**	Ate	Ø 22,20	Alu, +ABS, -ESP
					PF601	Ate	Ø 23,81	Ch 09002-, Alu, +ABS, -ESP
	98-8/00				**PF269**	Ate	Ø 22,20	Alu, -ABS
					PF573	Ate	Ø 23,81	Ch 09002-, Alu, -ABS
	98-8/00				**PF274**	Bch	Ø 22,20	Alu, +ABS
	6/00-				**PF268**	Bdx	Ø 23,81	Ch -09001, Alu, +ABS
	00-				**PF272**	Bdx	Ø 23,81	Ch -09001, Alu, -ABS
1.9 SD Eng.DHV(XUD9BSD) (55kW)	98-		R	L	**CF061**	Bdx	Ø 20,64	CRCI, -ABS
	98-		R	L	**CF043**	Luc	Ø 20,64	CRCI, -ABS
	98-		R	R	**CF062**	Bdx	Ø 20,64	CRCI, -ABS
	98-		R	R	**CF042**	Luc	Ø 20,64	CRCI, -ABS
	98-		R		**CF159**	Luc	Ø 20,64	Ch -08210, +ABS
			R		**CF162**	Luc	Ø 20,64	Ch 08211-, Alu, +ABS
	98-8/00				**PF243**	Ate	Ø 22,20	Alu, +ABS, -ESP
	98-8/00				**PF269**	Ate	Ø 22,20	Alu, -ABS
	98-8/00				**PF274**	Bch	Ø 22,20	Alu, +ABS
1.9 TD Eng.DHY(XUD9TE-Y) (66kW)	97-		R	L	**CF061**	Bdx	Ø 20,64	CRCI, -ABS
	9/97-		R	L	**CF043**	Luc	Ø 20,64	CRCI, -ABS
	97-		R	R	**CF062**	Bdx	Ø 20,64	CRCI, -ABS
	9/97-		R	R	**CF042**	Luc	Ø 20,64	CRCI, -ABS
	97-		R		**CF159**	Luc	Ø 20,64	Ch -08210, +ABS
			R		**CF162**	Luc	Ø 20,64	Ch 08211-, Alu, +ABS
	9/97-8/00				**PF243**	Ate	Ø 22,20	Alu, +ABS, -ESP
	97-8/00				**PF269**	Ate	Ø 22,20	Alu, -ABS
	9/97-8/00				**PF274**	Bch	Ø 22,20	Alu, +ABS
2.0 16v Eng.RFN(EW10J4) (100kW)	00-				**PF606**	Ate	Ø 23,81	Alu, +ABS, +ESP
					PF601	Ate	Ø 23,81	Ch 09002-, Alu, +ABS, -ESP
					PF573	Ate	Ø 23,81	Ch 09002-, Alu, -ABS
	6/00-				**PF268**	Bdx	Ø 23,81	Ch -09001, Alu, +ABS
	00-				**PF272**	Bdx	Ø 23,81	Ch -09001, Alu, -ABS
2.0 HDi Eng.RHS/RHZ(DW10ATED) (80kW)	01-				**PF606**	Ate	Ø 23,81	Alu, +ABS, +ESP
					PF601	Ate	Ø 23,81	Ch 09002-, Alu, +ABS, -ESP
					PF573	Ate	Ø 23,81	Ch 09002-, Alu, -ABS

CITROËN

		Spare Parts	F/R	L/R	FRITECH ref.		DIMENSIONS mm.	NOTE
2.0 HDi Eng.RHS/RHZ(DW10ATED) (80kW)	01-				**PF268**	Bdx	Ø 23,81	Ch -09001, Alu, +ABS
	01-				**PF272**	Bdx	Ø 23,81	Ch -09001, Alu, -ABS
2.0 HDi Eng.RHY(DW10TD) (66kW)	00-				**PF606**	Ate	Ø 23,81	Alu, +ABS, +ESP
	99-8/00				**PF243**	Ate	Ø 22,20	Alu, +ABS, -ESP
					PF601	Ate	Ø 23,81	Ch 09002-, Alu, +ABS, -ESP
	99-8/00				**PF269**	Ate	Ø 22,20	Alu, -ABS
					PF573	Ate	Ø 23,81	Ch 09002-, Alu, -ABS
	99-8/00				**PF274**	Bch	Ø 22,20	Alu, +ABS
	6/00-				**PF268**	Bdx	Ø 23,81	Ch -09001, Alu, +ABS
	00-				**PF272**	Bdx	Ø 23,81	Ch -09001, Alu, -ABS
2.0 i 16v Eng.RFS(XU10J4RS) (120kW)	-00				**PF601**	Ate	Ø 23,81	Ch 09002-, Alu, +ABS, -ESP
	-00				**PF573**	Ate	Ø 23,81	Ch 09002-, Alu, -ABS
	97-				**PF268**	Bdx	Ø 23,81	Ch -09001, Alu, +ABS
	97-				**PF272**	Bdx	Ø 23,81	Ch -09001, Alu, -ABS
2.0 i 16v Eng.RFV(XU10J4R) (97kW)	98-00				**PF268**	Bdx	Ø 23,81	Alu, +ABS
	98-00				**PF272**	Bdx	Ø 23,81	Ch -09001, Alu, -ABS
Xsara (N2) Break 4/97-8/05								
1.4 HDi Eng.8HX(DV4TD) (50kW)	03-		R		**CF134**	Bdx	Ø 22,00	
	03-				**PF606**	Ate	Ø 23,81	Alu, +ABS, +ESP
					PF601	Ate	Ø 23,81	Ch 09002-, Alu, +ABS, -ESP
					PF573	Ate	Ø 23,81	Ch 09002-, Alu, -ABS
	03-				**PF268**	Bdx	Ø 23,81	Ch -09001, Alu, +ABS
	03-				**PF272**	Bdx	Ø 23,81	Ch -09001, Alu, -ABS
1.4 i Eng.KFX/ KFW(TU3JP) (55kW)	97-		R		**CF134**	Bdx	Ø 22,00	+ABS
	97-8/00		R		**CF133**	Bdx	Ø 20,64	-ABS
	00-				**PF606**	Ate	Ø 23,81	Alu, +ABS, +ESP
	97-8/00				**PF243**	Ate	Ø 22,20	Alu, +ABS, -ESP
					PF601	Ate	Ø 23,81	Ch 09002-, Alu, +ABS, -ESP
	97-8/00				**PF269**	Ate	Ø 22,20	Alu, -ABS
					PF573	Ate	Ø 23,81	Ch 09002-, Alu, -ABS
	6/00-				**PF268**	Bdx	Ø 23,81	Ch -09001, Alu, +ABS
1.5 D Eng.VJZ(TUD5) (42kW)	97-		R		**CF134**	Bdx	Ø 22,00	+ABS
	97-8/00		R		**CF133**	Bdx	Ø 20,64	-ABS
	97-00				**PF269**	Ate	Ø 22,20	Alu, -ABS
	97-00				**PF268**	Bdx	Ø 23,81	Alu, +ABS
1.6 16v Eng.NFU(TU5JP4) (80kW)	00-				**PF606**	Ate	Ø 23,81	Alu, +ABS, +ESP
					PF601	Ate	Ø 23,81	Ch 09002-, Alu, +ABS, -ESP
					PF573	Ate	Ø 23,81	Ch 09002-, Alu, -ABS
	6/00-				**PF268**	Bdx	Ø 23,81	Ch -09001, Alu, +ABS
	00-				**PF272**	Bdx	Ø 23,81	Ch -09001, Alu, -ABS
1.6 i Eng.NFZ(TU5JP) (65kW)	97-00		R		**CF134**	Bdx	Ø 22,00	+ABS
	97-00		R		**CF133**	Bdx	Ø 20,64	-ABS
	97-00				**PF243**	Ate	Ø 22,20	Alu, +ABS, -ESP
	97-00				**PF269**	Ate	Ø 22,20	Alu, -ABS
	6/00-				**PF268**	Bdx	Ø 23,81	Ch -09001, Alu, +ABS
1.8 D Eng.A9A(XUD7) (43kW)	97-00		R		**CF134**	Bdx	Ø 22,00	+ABS
	97-00		R		**CF133**	Bdx	Ø 20,64	-ABS
	97-00				**PF269**	Ate	Ø 22,20	Alu, -ABS
	97-00				**PF268**	Bdx	Ø 23,81	Alu, +ABS
1.8 i Aut. Eng.LFZ(XU7JP) (74kW)	97-00		R		**CF134**	Bdx	Ø 22,00	+ABS
	97-00				**PF268**	Bdx	Ø 23,81	Alu, +ABS
	97-00				**PF272**	Bdx	Ø 23,81	Ch -09001, Alu, -ABS
1.8i Eng.LFX(XU7JB) (66kW)	97-		R		**CF134**	Bdx	Ø 22,00	+ABS
	97-8/00				**PF243**	Ate	Ø 22,20	Alu, +ABS, -ESP
	6/00-				**PF268**	Bdx	Ø 23,81	Ch -09001, Alu, +ABS
	97-00				**PF272**	Bdx	Ø 23,81	Ch -09001, Alu, -ABS
1.8i 16v Eng.LFY(XU7JP4) (81kW)	6/00-				**PF268**	Bdx	Ø 23,81	Ch -09001, Alu, +ABS
	00-				**PF272**	Bdx	Ø 23,81	Ch -09001, Alu, -ABS
1.9 D Eng.DJY(XUD9A) (50kW)	10/97-		R		**CF134**	Bdx	Ø 22,00	+ABS
	10/97-8/00		R		**CF133**	Bdx	Ø 20,64	-ABS
	10/97-8/00				**PF269**	Ate	Ø 22,20	Alu, -ABS
	97-				**PF268**	Bdx	Ø 23,81	Ch -09001, Alu, +ABS
1.9 D Eng.WJY(DW8B)/ WJZ(DW8) (51kW)	98-		R		**CF134**	Bdx	Ø 22,00	+ABS
	98-8/00		R		**CF133**	Bdx	Ø 20,64	-ABS

		Spare Parts	F/R	L/R	FRITECH ref.		DIMENSIONS mm.	NOTE
1.9 D Eng.WJY(DW8B)/ WJZ(DW8) (51kW)	00-				**PF606**	Ate	Ø 23,81	Alu, +ABS, +ESP
					PF601	Ate	Ø 23,81	Ch 09002-, Alu, +ABS, -ESP
	98-00				**PF269**	Ate	Ø 22,20	Alu, -ABS
					PF573	Ate	Ø 23,81	Ch 09002-, Alu, -ABS
	98-				**PF268**	Bdx	Ø 23,81	Ch -09001, Alu, +ABS
	00-				**PF272**	Bdx	Ø 23,81	Ch -09001, Alu, -ABS
1.9 SD Eng.DHV(XUD9BSD) (55kW)	98-		R		**CF134**	Bdx	Ø 22,00	+ABS
	98-8/00		R		**CF133**	Bdx	Ø 20,64	-ABS
	98-00				**PF268**	Bdx	Ø 23,81	Alu, +ABS
	98-00				**PF272**	Bdx	Ø 23,81	Ch -09001, Alu, -ABS
1.9 TD Eng.DHY(XUD9TE-Y) (66kW)	10/97-		R		**CF134**	Bdx	Ø 22,00	+ABS
	10/97-8/00		R		**CF133**	Bdx	Ø 20,64	-ABS
	97-00				**PF268**	Bdx	Ø 23,81	Alu, +ABS
	97-00				**PF272**	Bdx	Ø 23,81	Ch -09001, Alu, -ABS
2.0 16v Eng.RFN(EW10J4) (100kW)	00-				**PF606**	Ate	Ø 23,81	Alu, +ABS, +ESP
					PF601	Ate	Ø 23,81	Ch 09002-, Alu, +ABS, -ESP
					PF573	Ate	Ø 23,81	Ch 09002-, Alu, -ABS
	6/00-				**PF268**	Bdx	Ø 23,81	Ch -09001, Alu, +ABS
	00-				**PF272**	Bdx	Ø 23,81	Ch -09001, Alu, -ABS
2.0 HDi Eng.RHS/ RHZ(DW10ATED) (80kW)	01-				**PF606**	Ate	Ø 23,81	Alu, +ABS, +ESP
					PF601	Ate	Ø 23,81	Ch 09002-, Alu, +ABS, -ESP
					PF573	Ate	Ø 23,81	Ch 09002-, Alu, -ABS
	01-				**PF268**	Bdx	Ø 23,81	Ch -09001, Alu, +ABS
	01-				**PF272**	Bdx	Ø 23,81	Ch -09001, Alu, -ABS
2.0 HDi Eng.RHY(DW10TD) (66kW)	00-				**PF606**	Ate	Ø 23,81	Alu, +ABS, +ESP
					PF601	Ate	Ø 23,81	Ch 09002-, Alu, +ABS, -ESP
					PF573	Ate	Ø 23,81	Ch 09002-, Alu, -ABS
	99-				**PF268**	Bdx	Ø 23,81	Ch -09001, Alu, +ABS
	99-				**PF272**	Bdx	Ø 23,81	Ch -09001, Alu, -ABS
2.0 i 16v Eng.RFV(XU10J4R) (97kW)	98-				**PF268**	Bdx	Ø 23,81	Ch -09001, Alu, +ABS
	98-				**PF272**	Bdx	Ø 23,81	Ch -09001, Alu, -ABS
Xsara Picasso (N68) 2/00-12/12								
1.6 Eng.NFZ/ NFV(TU5JP) (65-70kW)	1/00-		R		**CF158**	Luc	Ø 22,00	
	1/00-		R		**CF868**	Trw	Ø 22,00	Alu
	00-				**PF650**	Bch	Ø 23,81	Alu, +ABS, +ESP
	00-				**PF458**	Bch	Ø 23,81	Alu, +ABS, -ESP
	00-				**PF272**	Bdx	Ø 23,81	Ch -09001, Alu, -ABS
	00-				**CZ103**	Fte	Ø 19,05	Pla
1.6 16v Eng.NFU(TU5JP4) (80kW)	05-				**PF650**	Bch	Ø 23,81	Alu, +ABS, +ESP
	05-				**PF458**	Bch	Ø 23,81	Alu, +ABS
	05-				**CZ103**	Fte	Ø 19,05	Pla
1.6 Chrono (74kW)	01-		R		**CF158**	Luc	Ø 22,00	
	01-		R		**CF868**	Trw	Ø 22,00	Alu
1.6 HDi Eng.DV6ATED4 (66kW)	05-				**PF650**	Bch	Ø 23,81	Alu, +ABS, +ESP
	05-				**CZ103**	Fte	Ø 19,05	Pla
1.6 HDi 16v Eng.9HY(DV6TED4) (80kW)	04-				**PF650**	Bch	Ø 23,81	Alu, +ABS, +ESP
	04-				**PF458**	Bch	Ø 23,81	Alu, +ABS, -ESP
	04-				**PF272**	Bdx	Ø 23,81	Ch -09001, Alu, -ABS
	04-				**CZ103**	Fte	Ø 19,05	Pla
1.8i 16v Eng.LFY(XU7JP4)/ 6FZ(EW7J4)	1/00-		R		**CF158**	Luc	Ø 22,00	
(81-85kW)	1/00-		R		**CF868**	Trw	Ø 22,00	Alu
	00-				**PF650**	Bch	Ø 23,81	Alu, +ABS, +ESP
	00-				**PF458**	Bch	Ø 23,81	Alu, +ABS, -ESP
	00-				**PF272**	Bdx	Ø 23,81	Ch -09001, Alu, -ABS
	00-				**CZ103**	Fte	Ø 19,05	Pla
2.0 16v Eng.RFN(EW10J4) (100kW)	03-		R		**CF868**	Trw	Ø 22,00	Alu
	03-				**PF650**	Bch	Ø 23,81	Alu, +ABS, +ESP
	03-				**PF458**	Bch	Ø 23,81	Alu, +ABS, -ESP
	03-				**PF272**	Bdx	Ø 23,81	Ch -09001, Alu, -ABS
	03-				**CZ103**	Fte	Ø 19,05	Pla
2.0 HDi Eng.RHY(DW10TD) (66kW)	1/00-		R		**CF158**	Luc	Ø 22,00	
	1/00-		R		**CF868**	Trw	Ø 22,00	Alu
	00-				**PF650**	Bch	Ø 23,81	Alu, +ABS, +ESP
	1/00-				**PF458**	Bch	Ø 23,81	Alu, +ABS, -ESP

CITROËN

		Spare Parts	F/R	L/R	FRITECH ref.		DIMENSIONS mm.	NOTE
2.0 HDi Eng.RHY(DW10TD) (66kW)	00-				**PF272**	Bdx	Ø 23,81	Ch -09001, Alu, -ABS
	00-				**CZ103**	Fte	Ø 19,05	Pla
2.0 HDi Eng.RHZ(DW10ATED) (80kW)	1/00-		R		**CF158**	Luc	Ø 22,00	
	1/00-		R		**CF868**	Trw	Ø 22,00	Alu
ZX (N2) 3/91-6/97								
1.1 Eng.HDZ(TU1M) (44kW)	3/91-7/92		R	L	**CF025**	Bdx	Ø 20,64	CRCI
	8/92-		R	L	**CF061**	Bdx	Ø 20,64	CRCI
	3/91-7/92		R	L	**CF063**	Luc	Ø 20,64	CRCI
	8/92-		R	L	**CF043**	Lucas/Ate	Ø 20,64	CRCI
	3/91-7/92		R	R	**CF026**	Bdx	Ø 20,64	CRCI
	8/92-		R	R	**CF062**	Bdx	Ø 20,64	CRCI
	3/91-7/92		R	R	**CF064**	Luc	Ø 20,64	CRCI
	8/92-		R	R	**CF042**	Lucas/Ate	Ø 20,64	CRCI
	91-				**PF007**	Ate	Ø 20,64	Ch -7125, -ABS
					PF213	Bdx	Ø 20,64	Ch 7126-, Alu, -ABS
1.4 i Eng.KDX/ KDZ(TU3M-Z) (55kW)	3/91-7/92		R	L	**CF025**	Bdx	Ø 20,64	CRCI, -ABS
	8/92-		R	L	**CF061**	Bdx	Ø 20,64	CRCI, -ABS
	3/91-7/92		R	L	**CF063**	Luc	Ø 20,64	CRCI, -ABS
	8/92-		R	L	**CF043**	Lucas/Ate	Ø 20,64	CRCI, -ABS
	3/91-7/92		R	R	**CF026**	Bdx	Ø 20,64	CRCI, -ABS
	8/92-		R	R	**CF062**	Bdx	Ø 20,64	CRCI, -ABS
	3/91-7/92		R	R	**CF064**	Luc	Ø 20,64	CRCI, -ABS
	8/92-		R	R	**CF042**	Lucas/Ate	Ø 20,64	CRCI, -ABS
	5/95-		R		**CF159**	Luc	Ø 20,64	+ABS
	91-				**PF007**	Ate	Ø 20,64	Ch -7125, -ABS
					PF213	Bdx	Ø 20,64	Ch 7126-, Alu, -ABS
	91-				**PF173**	Luc	Ø 22,20	Ch -7069, +ABS
1.4ie Eng.KFX(TU3JP) (55kW)	3/91-7/92		R	L	**CF025**	Bdx	Ø 20,64	CRCI, -ABS
	8/92-		R	L	**CF061**	Bdx	Ø 20,64	CRCI, -ABS
	3/91-7/92		R	L	**CF063**	Luc	Ø 20,64	CRCI, -ABS
	8/92-		R	L	**CF043**	Lucas/Ate	Ø 20,64	CRCI, -ABS
	3/91-7/92		R	R	**CF026**	Bdx	Ø 20,64	CRCI, -ABS
	8/92-		R	R	**CF062**	Bdx	Ø 20,64	CRCI, -ABS
	3/91-7/92		R	R	**CF064**	Luc	Ø 20,64	CRCI, -ABS
	8/92-		R	R	**CF042**	Lucas/Ate	Ø 20,64	CRCI, -ABS
	5/95-		R		**CF159**	Luc	Ø 20,64	+ABS
	91-				**PF007**	Ate	Ø 20,64	Ch -7125, -ABS
					PF213	Bdx	Ø 20,64	Ch 7126-, Alu, -ABS
	91-				**PF173**	Luc	Ø 22,20	Ch -7069, +ABS
1.6 i Eng.BDY(XU5M)/ BFZ(XU5JP) (65-66kW)	3/91-7/92		R	L	**CF025**	Bdx	Ø 20,64	CRCI, -ABS
	8/92-		R	L	**CF061**	Bdx	Ø 20,64	CRCI, -ABS
	3/91-7/92		R	L	**CF063**	Luc	Ø 20,64	CRCI, -ABS
	8/92-		R	L	**CF043**	Lucas/Ate	Ø 20,64	CRCI, -ABS
	3/91-7/92		R	R	**CF026**	Bdx	Ø 20,64	CRCI, -ABS
	8/92-		R	R	**CF062**	Bdx	Ø 20,64	CRCI, -ABS
	3/91-7/92		R	R	**CF064**	Luc	Ø 20,64	CRCI, -ABS
	8/92-		R	R	**CF042**	Lucas/Ate	Ø 20,64	CRCI, -ABS
	5/95-		R		**CF159**	Luc	Ø 20,64	+ABS
	91-				**PF007**	Ate	Ø 20,64	Ch -7125, -ABS
					PF213	Bdx	Ø 20,64	Ch 7126-, Alu, -ABS
	91-				**PF173**	Luc	Ø 22,20	Ch -7069, +ABS
1.8 Eng.LFY(XU7JP4) (82kW)	6/96-97				**PF571**	Ate	Ø 22,20	Alu, +ABS
1.8 Eng.XU7JP (76kW)	6/96-97				**PF571**	Ate	Ø 22,20	Alu, +ABS
1.8 D Eng.161A(XUD7) (44kW)	93-97		R	L	**CF061**	Bdx	Ø 20,64	CRCI, -ABS
	93-97		R	L	**CF043**	Lucas/Ate	Ø 20,64	CRCI, -ABS
	93-97		R	R	**CF062**	Bdx	Ø 20,64	CRCI, -ABS
	93-97		R	R	**CF042**	Lucas/Ate	Ø 20,64	CRCI, -ABS
	93-97		R		**CF159**	Luc	Ø 20,64	+ABS
	93-				**PF007**	Ate	Ø 20,64	Ch -7125, -ABS
					PF213	Bdx	Ø 20,64	Ch 7126-, Alu, -ABS
	93-				**PF173**	Luc	Ø 22,20	Ch -7069, +ABS
1.8i Eng.LFZ(XU7JP) (74kW)	8/92-		R	L	**CF061**	Bdx	Ø 20,64	CRCI, -ABS
	8/92-		R	L	**CF043**	Lucas/Ate	Ø 20,64	CRCI, -ABS
	8/92-		R	R	**CF062**	Bdx	Ø 20,64	CRCI, -ABS

		Spare Parts	F/R	L/R	FRITECH ref.		DIMENSIONS mm.	NOTE
1.8i Eng.LFZ(XU7JP) (74kW)	8/92-		R	R	**CF042**	Lucas/Ate	Ø 20,64	CRCI, -ABS
	5/95-		R		**CF159**	Luc	Ø 20,64	+ABS
	8/92-				**PF007**	Ate	Ø 20,64	Ch -7125, -ABS
					PF213	Bdx	Ø 20,64	Ch 7126-, Alu, -ABS
	92-				**PF173**	Luc	Ø 22,20	Ch -7069, +ABS
1.8i 16v Eng.LFY(XU7JP4) (81kW)	96-				**PF007**	Ate	Ø 20,64	Ch -7125, -ABS
	-97				**PF213**	Bdx	Ø 20,64	Ch 7126-, Alu, -ABS
	96-97				**PF173**	Luc	Ø 22,20	Ch -7069, +ABS
1.9 D Eng.D9B(XUD9A-U) (51kW)	94-		R	L	**CF061**	Bdx	Ø 20,64	CRCI, -ABS
	94-		R	L	**CF043**	Lucas/Ate	Ø 20,64	CRCI, -ABS
	94-		R	R	**CF062**	Bdx	Ø 20,64	CRCI, -ABS
	94-		R	R	**CF042**	Lucas/Ate	Ø 20,64	CRCI, -ABS
	94-		R		**CF159**	Luc	Ø 20,64	+ABS
	6/96-97				**PF571**	Ate	Ø 22,20	Alu, +ABS
	94-				**PF007**	Ate	Ø 20,64	Ch -7125, -ABS
					PF213	Bdx	Ø 20,64	Ch 7126-, Alu, -ABS
	94-				**PF173**	Luc	Ø 22,20	Ch -7069, +ABS
1.9 D Eng.DJZ(XUD9Y) (47kW)	10/91-7/92		R	L	**CF025**	Bdx	Ø 20,64	CRCI, -ABS
	8/92-		R	L	**CF061**	Bdx	Ø 20,64	CRCI, -ABS
	10/91-7/92		R	L	**CF063**	Luc	Ø 20,64	CRCI, -ABS
	8/92-		R	L	**CF043**	Lucas/Ate	Ø 20,64	CRCI, -ABS
	10/91-7/92		R	R	**CF026**	Bdx	Ø 20,64	CRCI, -ABS
	8/92-		R	R	**CF062**	Bdx	Ø 20,64	CRCI, -ABS
	10/91-7/92		R	R	**CF064**	Luc	Ø 20,64	CRCI, -ABS
	8/92-		R	R	**CF042**	Lucas/Ate	Ø 20,64	CRCI, -ABS
	5/95-		R		**CF159**	Luc	Ø 20,64	+ABS
	91-				**PF007**	Ate	Ø 20,64	Ch -7125, -ABS
					PF213	Bdx	Ø 20,64	Ch 7126-, Alu, -ABS
	5/95-				**PF173**	Luc	Ø 22,20	Ch -7069, +ABS
1.9 DT Eng.DHY(XUD9TE-Y) (65kW)	6/96-97				**PF571**	Ate	Ø 22,20	Alu, +ABS
1.9 DT Eng.XUD9TE (68kW)	92-94		R	L	**CF043**	Lucas/Ate	Ø 20,64	CRCI, -ABS
	92-94		R	R	**CF042**	Lucas/Ate	Ø 20,64	CRCI, -ABS
	92-				**PF007**	Ate	Ø 20,64	Ch -7125, -ABS
	-94				**PF213**	Bdx	Ø 20,64	Ch 7126-, Alu, -ABS
1.9 i Eng.DKZ(XU9JA) (88kW)	91-				**PF007**	Ate	Ø 20,64	Ch -7125, -ABS
	-97				**PF213**	Bdx	Ø 20,64	Ch 7126-, Alu, -ABS
	91-				**PF173**	Luc	Ø 22,20	Ch -7069, +ABS
1.9 TD Eng.DHY(XUD9TE-Y) (66kW)	8/92-		R	L	**CF061**	Bdx	Ø 20,64	CRCI, -ABS
	8/92-		R	L	**CF043**	Lucas/Ate	Ø 20,64	CRCI, -ABS
	8/92-		R	R	**CF062**	Bdx	Ø 20,64	CRCI, -ABS
	92-		R	R	**CF042**	Lucas/Ate	Ø 20,64	CRCI, -ABS
	5/95-		R		**CF159**	Luc	Ø 20,64	+ABS
	92-				**PF007**	Ate	Ø 20,64	Ch -7125, -ABS
	-97				**PF213**	Bdx	Ø 20,64	Ch 7126-, Alu, -ABS
	92-				**PF173**	Luc	Ø 22,20	Ch -7069, +ABS
2.0 Eng.RFZ(XU10J2) (90kW)	6/96-97				**PF571**	Ate	Ø 22,20	Alu, +ABS
2.0 i 16v Eng.RFT(XU10J4Z) (110kW)	94-97				**PF191**	Bdx	Ø 23,81	
2.0 i 16v Eng.RFY/Y(XU10J4Z) (112-114kW)	92-94				**PF191**	Bdx	Ø 23,81	
2.0i Eng.RFX(XU10J2C) (89kW)	92-				**PF007**	Ate	Ø 20,64	Ch -7125, -ABS
	92-				**PF213**	Bdx	Ø 20,64	Ch -7125, Alu, -ABS
	92-				**PF173**	Luc	Ø 22,20	Ch -7069, +ABS
ZX (N2) Break 3/91-6/97								
1.4 i Eng.KDX/ KDZ(TU3M-Z) (55kW)	91-		R		**CF133**	Bdx	Ø 20,64	
	91-				**PF173**	Luc	Ø 22,20	Ch -7069, +ABS
	91-				**PF188**		Ø 22,20	Ch -7069, -ABS
1.4ie Eng.KFX(TU3JP) (55kW)	91-		R		**CF133**	Bdx	Ø 20,64	
	91-				**PF173**	Luc	Ø 22,20	Ch -7069, +ABS
	91-				**PF188**		Ø 22,20	Ch -7069, -ABS
1.6 i Eng.BDY(XU5M)/ BFZ(XU5JP) (65-66kW)	91-		R		**CF133**	Bdx	Ø 20,64	
	91-				**PF173**	Luc	Ø 22,20	Ch -7069, +ABS
	91-				**PF188**		Ø 22,20	Ch -7069, -ABS
1.8 D Eng.161A(XUD7) (44kW)	93-97		R		**CF133**	Bdx	Ø 20,64	
	93-				**PF173**	Luc	Ø 22,20	Ch -7069, +ABS
	93-				**PF188**		Ø 22,20	Ch -7069, -ABS

CITROËN

		Spare Parts	F/R	L/R	FRITECH ref.		DIMENSIONS mm.	NOTE
1.8i Eng.LFZ(XU7JP) (74kW)	92-97		R		**CF133**	Bdx	Ø 20,64	
	92-				**PF173**	Luc	Ø 22,20	Ch -7069, +ABS
	92-				**PF188**		Ø 22,20	Ch -7069, -ABS
1.8i 16v Eng.LFY(XU7JP4) (81kW)	96-97		R		**CF133**	Bdx	Ø 20,64	
	96-				**PF173**	Luc	Ø 22,20	Ch -7069, +ABS
	96-				**PF188**		Ø 22,20	Ch -7069, -ABS
1.9 D Eng.D9B(XUD9A-U) (51kW)	2/94-		R		**CF133**	Bdx	Ø 20,64	
	2/94-				**PF173**	Luc	Ø 22,20	Ch -7069, +ABS
	2/94-				**PF188**		Ø 22,20	Ch -7069, -ABS
1.9 D Eng.DJZ(XUD9Y) (47kW)	91-		R		**CF133**	Bdx	Ø 20,64	
	91-				**PF173**	Luc	Ø 22,20	Ch -7069, +ABS
	91-				**PF188**		Ø 22,20	Ch -7069, -ABS
1.9 TD Eng.DHY(XUD9TE-Y) (66kW)	92-		R		**CF133**	Bdx	Ø 20,64	
	96-97				**PF571**	Ate	Ø 22,20	Alu, +ABS
	92-				**PF173**	Luc	Ø 22,20	Ch -7069, +ABS
	92-				**PF188**		Ø 22,20	Ch -7069, -ABS

CITROËN LCV

2 CV Fourgonette 7/64-								
AKB	6/70-7/76		F		**CF203**		Ø 28,57	
	10/67-7/69		F		**CF381**		Ø 28,60	
	10/67-7/69		R		**CF382**		Ø 19,05	
	7/69-7/76		R		**CF383**		Ø 19,05	
	6/70-7/76				**PF056**		Ø 19,05	
AKS 400	6/70-8/78		F		**CF203**		Ø 28,57	
	6/70-8/78		R		**CF383**		Ø 19,05	
	6/70-7/76				**PF056**		Ø 19,05	
	7/76-8/78				**PF057**		Ø 20,64	
AZU-GA 250	1/72-		F		**CF203**		Ø 28,57	
	3/68-1/72		F		**CF381**		Ø 28,60	
	1/72-		R		**CF350**		Ø 17,46	
	7/64-1/72		R		**CF382**		Ø 19,05	
	1/72-7/76				**PF056**		Ø 19,05	
	7/76-				**PF057**		Ø 20,64	
Berlingo I Van (M) 7/96-5/08								
1.1 Eng.HDZ(TU1M)/HFX(TU1JP) (40kW)	7/96-		R		**CF158**	Luc	Ø 22,00	
	7/96-		R		**CF868**	Trw	Ø 22,00	Alu
	6/00-				**PF268**	Bdx	Ø 23,81	Ch -09001, Alu, +ABS
	7/96-6/00				**PF265**	Bdx	Ø 23,81	Alu, +ABS
	00-				**PF272**	Bdx	Ø 23,81	Ch -09001, Alu, -ABS
	7/96-6/00				**PF271**	Bdx	Ø 23,81	Alu, -ABS
1.4 i, Bivalent Eng.KFX/ KFW(TU3JP) (55kW)	7/96-		R		**CF158**	Luc	Ø 22,00	
	7/96-		R		**CF868**	Trw	Ø 22,00	Alu
	6/00-				**PF268**	Bdx	Ø 23,81	Ch -09001, Alu, +ABS
	7/96-6/00				**PF265**	Bdx	Ø 23,81	Alu, +ABS
	00-				**PF272**	Bdx	Ø 23,81	Ch -09001, Alu, -ABS
	7/96-6/00				**PF271**	Bdx	Ø 23,81	Alu, -ABS
1.6 16v Eng.NFU(TU5JP4) (80-81kW)	02-				**PF884**	Bch	Ø 23,81	Alu, +ABS, +ESP
1.6 HDi Eng.9HX(DV6ATED4) (66kW)	05-		R		**CF158**	Luc	Ø 22,00	+ABS, -ESP
	05-		R		**CF868**	Trw	Ø 22,00	Alu, +ABS, -ESP
	05-				**PF884**	Bch	Ø 23,81	Alu, +ABS, +ESP
	05-				**PF268**	Bdx	Ø 23,81	Alu, +ABS, -ESP
	05-				**PF272**	Bdx	Ø 23,81	Ch -09001, Alu, -ABS
1.6 HDi Eng.DV6B/9HW(DV6ETED) (55kW)	05-		R		**CF158**	Luc	Ø 22,00	+ABS, -ESP
	05-		R		**CF868**	Trw	Ø 22,00	Alu, +ABS, -ESP
	05-				**PF268**	Bdx	Ø 23,81	Alu, +ABS, -ESP
	05-				**PF272**	Bdx	Ø 23,81	Ch -09001, Alu, -ABS
1.8 D Eng.A9A(XUD7) (43kW)	7/96-		R		**CF158**	Luc	Ø 22,00	
	7/96-		R		**CF868**	Trw	Ø 22,00	Alu
	6/00-				**PF268**	Bdx	Ø 23,81	Ch -09001, Alu, +ABS
	7/96-6/00				**PF265**	Bdx	Ø 23,81	Alu, +ABS
	00-				**PF272**	Bdx	Ø 23,81	Ch -09001, Alu, -ABS
	7/96-6/00				**PF271**	Bdx	Ø 23,81	Alu, -ABS

		Spare Parts	F/R	L/R	FRITECH ref.		DIMENSIONS mm.	NOTE
1.9 D Eng.DJY(XUD9A) (50kW)	7/96-		R		**CF158**	Luc	Ø 22,00	
	7/96-		R		**CF868**	Trw	Ø 22,00	Alu
	6/00-				**PF268**	Bdx	Ø 23,81	Ch -09001, Alu, +ABS
	7/96-6/00				**PF265**	Bdx	Ø 23,81	Alu, +ABS
	00-				**PF272**	Bdx	Ø 23,81	Ch -09001, Alu, -ABS
	7/96-6/00				**PF271**	Bdx	Ø 23,81	Alu, -ABS
1.9 D, 4WD Eng.WJY/WJZ(DW8/B) (51kW)	98-		R		**CF158**	Luc	Ø 22,00	
	98-		R		**CF868**	Trw	Ø 22,00	Alu
	98-02				**PF573**	Ate	Ø 23,81	Alu, -ABS
	6/00-				**PF268**	Bdx	Ø 23,81	Ch -09001, Alu, +ABS
	98-6/00				**PF265**	Bdx	Ø 23,81	Alu, +ABS
	00-				**PF272**	Bdx	Ø 23,81	Ch -09001, Alu, -ABS
	98-6/00				**PF271**	Bdx	Ø 23,81	Alu, -ABS
2.0 HDi Eng.RHY(DW10TD) (66kW)	12/99-		R		**CF158**	Luc	Ø 22,00	
	12/99-		R		**CF868**	Trw	Ø 22,00	Alu
	02-				**PF884**	Bch	Ø 23,81	Alu, +ABS, +ESP
	6/00-				**PF268**	Bdx	Ø 23,81	Ch -09001, Alu, +ABS
	99-6/00				**PF265**	Bdx	Ø 23,81	Alu, +ABS
	00-				**PF272**	Bdx	Ø 23,81	Ch -09001, Alu, -ABS
	99-6/00				**PF271**	Bdx	Ø 23,81	Alu, -ABS
C15 (VD), Van 10/84-12/05								
0.95 Eng.XV8-TU9 (33kW)	10/84-		R		**CF020**		Ø 22,00	
					PF085	Bdx	Ø 17,46	Ch 3387-4237
					PF002	Bdx	Ø 20,64	Ch 4196-
	10/84-87				**PF083**		Ø 19,05	RHD
1.1 Eng.109-5F/ K (35-37kW)	4/85-		R		**CF020**		Ø 22,00	
					PF002	Bdx	Ø 20,64	Ch 4196-
	4/85-4/88				**PF083**		Ø 19,05	RHD
1.1 Eng.E1A (35kW)	4/85-		R		**CF020**		Ø 22,00	
					PF002	Bdx	Ø 20,64	Ch 4196-
	4/85-4/88				**PF083**		Ø 19,05	RHD
1.1 Eng.HDZ(TU1M) (44kW)	88-		R		**CF020**		Ø 22,00	
					PF002	Bdx	Ø 20,64	Ch 4196-
	88-				**PF083**		Ø 19,05	RHD
1.3 Eng.G1A (47kW)	7/87-6/88		R		**CF020**		Ø 22,00	
					PF002	Bdx	Ø 20,64	Ch 4196-
1.4 Eng.K1H(TU3A) (49kW)	2/87-		R		**CF020**		Ø 22,00	
					PF002	Bdx	Ø 20,64	Ch 4196-
	2/87-4/88				**PF083**		Ø 19,05	RHD
1.4 E Eng.150B/ C/ D/ Y(XY7) (44-59kW)	2/87-		R		**CF020**		Ø 22,00	
					PF002	Bdx	Ø 20,64	Ch 4196-
	2/87-4/88				**PF083**		Ø 19,05	RHD
1.4 E Eng.K3A (40kW)	2/87-		R		**CF020**		Ø 22,00	
					PF002	Bdx	Ø 20,64	Ch 4196-
	2/87-4/88				**PF083**		Ø 19,05	RHD
1.4 i Eng.KDY(TU3M/ FM) (55kW)	91-96		R		**CF020**		Ø 22,00	
					PF002	Bdx	Ø 20,64	Ch 4196-
1.8 D Eng.161A(XUD7) (44kW)	86-		R		**CF020**		Ø 22,00	
	86-				**PF002**	Bdx	Ø 20,64	
1.9 D Eng.WJX(DW8B) (44kW)	00-		R		**CF020**		Ø 22,00	
	00-				**PF002**	Bdx	Ø 20,64	
C2 Van (JM) 9/03-12/10								
1.4 HDi Eng.8HX(DV4TD) (50kW)	9/03-		R	L	**CF683**	Luc	Ø 19,05	CRCI, -ABS
	9/03-		R	R	**CF684**	Luc	Ø 19,05	CRCI, -ABS
	9/03-		R		**CF801**	Bch	Ø 20,64	Alu
	9/03-		R		**CF162**	Luc	Ø 20,64	Alu, +ABS
	9/03-				**PF625**	Bch	Ø 22,20	Alu, +ABS
	9/03-				**PF506**	Luc	Ø 22,20	Alu, +ABS, +ESP
	9/03-				**PF507**	Luc	Ø 22,20	Alu, +ABS, -ESP
	9/03-				**PF508**	Luc	Ø 20,64	Alu, -ABS
	03-				**CZ104**	Fte	Ø 19,05	Pla
C25 (280, 290) 9/81-2/94								
1.8 E Eng.169(XM7T) (51kW)	87-		R		**CF270**	Luc	Ø 22,22	Ch -73500, 16Q
	7/90-		R		**CF306**	Luc	Ø 22,22	8Q

CITROËN LCV

		Spare Parts	F/R	L/R	FRITECH ref.		DIMENSIONS mm.	NOTE
1.8 E Eng.169(XM7T) (51kW)			R		**CF157**	Luc	Ø 25,40	Ch 73501-, 16Q
	87-		R		**CF210**	Luc	Ø 26,99	18Q
	87-				**PF031**		Ø 22,20	
	87-				**CT012**		Ø 25,40	Ch -073500, Alu
	-94				**CT011**		Ø 25,40	Ch 073501-, Alu
1.9 D Eng.D9B(XUD9A-U) (51kW)	87-		R		**CF270**	Luc	Ø 22,22	Ch -73500, 16Q
	7/90-		R		**CF306**	Luc	Ø 22,22	8Q
			R		**CF157**	Luc	Ø 25,40	Ch 73501-, 16Q
	87-		R		**CF210**	Luc	Ø 26,99	18Q
	87-				**PF031**		Ø 22,20	
	87-				**CT012**		Ø 25,40	Ch -073500, Alu
	-94				**CT011**		Ø 25,40	Ch 073501-, Alu
1.9 TD Eng.M705(280A1 FIAT) (60kW)	92-		R		**CF270**	Luc	Ø 22,22	Ch -73500, 16Q
	92-		R		**CF306**	Luc	Ø 22,22	8Q
			R		**CF157**	Luc	Ø 25,40	Ch 73501-, 16Q
	92-		R		**CF210**	Luc	Ø 26,99	18Q
	92-				**PF031**		Ø 22,20	
	92-				**CT012**		Ø 25,40	Ch -073500, Alu
	-94				**CT011**		Ø 25,40	Ch 073501-, Alu
2.0 E, Van Eng.170A/ B(XN1T) (58kW)	10/81-		R		**CF270**	Luc	Ø 22,22	Ch -73500, 16Q
	7/90-		R		**CF306**	Luc	Ø 22,22	8Q
			R		**CF157**	Luc	Ø 25,40	Ch 73501-, 16Q
	87-		R		**CF210**	Luc	Ø 26,99	18Q
	10/81-				**PF031**		Ø 22,20	
	87-				**CT012**		Ø 25,40	Ch -073500, Alu
	-94				**CT011**		Ø 25,40	Ch 073501-, Alu
2.0, Van, Flatbed Eng.170C (62kW)	91-		R		**CF270**	Luc	Ø 22,22	Ch -73500, 16Q
	91-		R		**CF306**	Luc	Ø 22,22	8Q
			R		**CF157**	Luc	Ø 25,40	Ch 73501-, 16Q
	91-		R		**CF210**	Luc	Ø 26,99	18Q
	91-				**PF031**		Ø 22,20	
	91-				**CT012**		Ø 25,40	Ch -073500, Alu
	-94				**CT011**		Ø 25,40	Ch 073501-, Alu
2.5 D, 4WD Eng.CRD93L(U25-661) (54-55kW)	87-		R		**CF270**	Luc	Ø 22,22	Ch -73500, 16Q
	7/90-		R		**CF306**	Luc	Ø 22,22	8Q
			R		**CF157**	Luc	Ø 25,40	Ch 73501-, 16Q
	87-		R		**CF210**	Luc	Ø 26,99	18Q
	87-				**PF031**		Ø 22,20	
	87-				**CT012**		Ø 25,40	Ch -073500, Alu
	-94				**CT011**		Ø 25,40	Ch 073501-, Alu
2.5 TD, 4WD Eng.CRD93LS(U25-673/ M25-648)	87-		R		**CF270**	Luc	Ø 22,22	Ch -73500, 16Q
(70kW)	7/90-		R		**CF306**	Luc	Ø 22,22	8Q
			R		**CF157**	Luc	Ø 25,40	Ch 73501-, 16Q
	87-		R		**CF210**	Luc	Ø 26,99	18Q
	87-				**PF031**		Ø 22,20	
	87-				**CT012**		Ø 25,40	Ch -073500, Alu
	-94				**CT011**		Ø 25,40	Ch 073501-, Alu
C3 I Van 2/03-10/09								
1.4 Eng.KFV(TU3JP) (54kW)	2/02-		R	L	**CF683**	Luc	Ø 19,05	CRCI, -ABS
	2/02-		R	R	**CF684**	Luc	Ø 19,05	CRCI, -ABS
	2/02-		R		**CF520**	Luc	Ø 20,64	Alu, +ABS
	02-				**PF625**	Bch	Ø 22,20	Alu, +ABS
	2/02-				**PF506**	Luc	Ø 22,20	Alu, +ABS, +ESP
	2/02-				**PF507**	Luc	Ø 22,20	Alu, +ABS, -ESP
	2/02-				**PF508**	Luc	Ø 20,64	Alu, -ABS
	02-				**CZ104**	Fte	Ø 19,05	Pla
1.4 HDi Eng.8HX(DV4TD) (50kW)	2/02-		R	L	**CF683**	Luc	Ø 19,05	CRCI, -ABS
	2/02-		R	R	**CF684**	Luc	Ø 19,05	CRCI, -ABS
	2/02-		R		**CF520**	Luc	Ø 20,64	Alu, +ABS
	02-				**PF625**	Bch	Ø 22,20	Alu, +ABS
	2/02-				**PF506**	Luc	Ø 22,20	Alu, +ABS, +ESP
	2/02-				**PF507**	Luc	Ø 22,20	Alu, +ABS, -ESP
	2/02-				**PF508**	Luc	Ø 20,64	Alu, -ABS
	02-				**CZ104**	Fte	Ø 19,05	Pla

		Spare Parts	F/R	L/R	FRITECH ref.		DIMENSIONS mm.	NOTE
C4 Van 1/04-10/10								
1.6 16v HDi Eng.9HX(DV6ATED4) (66kW)	04-				**PF798**	Bch	Ø 23,81	Alu, +ABS, +ESP
	04-				**CZ103**	Fte	Ø 19,05	Pla
	04-				**PZ115**	Fte	Ø 15,87	Pla
Dispatch 1/94-12/00								
1.6 Eng.XU5JP (66kW)			R		**CF094**		Ø 19,05	
1.9 D, TD Eng.DHX(XUD9TF-BTF) (66kW)			R		**CF094**		Ø 19,05	
	6/94-				**PF217**		Ø 23,81	+ABS
	6/94-				**PF218**		Ø 23,81	-ABS
Jumper I (230)/ Relay 3/94-4/02								
1.9 D Eng.D9B(XUD9A-U) (51kW)	94-02		R		**CF182**	Loc	Ø 27,00	Rear Drum Brake
	99-		R		**CF181**		Ø 25,40	10-14Q
	99-02				**PF206**		Ø 23,81	10-14Q, +ABS
	99-02				**PF209**		Ø 23,81	10-14Q, -ABS
	94-				**CT016**		Ø 25,40	Ch -S16206244, Alu, Rear Disc Brake, 10Q, -ABS
	94-				**PZ155**	Valeo	Ø 15,87	
1.9 D Eng.DJY(XUD9A) (50kW)	99-02				**CT016**		Ø 25,40	Ch -S16206244, Alu, Rear Disc Brake, 10Q, -ABS
	99-				**PZ155**	Valeo	Ø 15,87	
1.9 TD Eng.D8C(XUD9UTF) (66kW)	94-02		R		**CF182**	Loc	Ø 27,00	Rear Drum Brake
	2/94-		R		**CF181**		Ø 25,40	10-14Q
	2/94-12/94				**PF207**		Ø 22,20	10-14Q, +ABS
	1/95-02				**PF206**		Ø 23,81	10-14Q, +ABS
	2/94-12/94				**PF210**		Ø 22,20	10-14Q, -ABS
	1/95-02				**PF209**		Ø 23,81	10-14Q, -ABS
	94-				**CT016**		Ø 25,40	Ch -S16206244, Alu, Rear Disc Brake, 10-14Q, -ABS
	94-				**PZ155**	Valeo	Ø 15,87	
1.9 TD Eng.D8C(XUD9UTF) (68kW)	96-02		R		**CF182**	Loc	Ø 27,00	Rear Drum Brake
	96-		R		**CF181**		Ø 25,40	10-14Q
	96-02				**PF206**		Ø 23,81	10-14Q, +ABS
	96-02				**PF209**		Ø 23,81	10-14Q, -ABS
	96-				**CT016**		Ø 25,40	Ch -S16206244, Alu, Rear Disc Brake, 10-14Q, -ABS
	96-				**PZ155**	Valeo	Ø 15,87	
1.9 TD Eng.DHX(XUD9TF-BTF) (66kW)	94-02		R		**CF182**	Loc	Ø 27,00	Rear Drum Brake
	2/94-		R		**CF181**		Ø 25,40	10-14Q
	2/94-12/94				**PF207**		Ø 22,20	10-14Q, +ABS
	1/95-02				**PF206**		Ø 23,81	10-14Q, +ABS
	2/94-12/94				**PF210**		Ø 22,20	10-14Q, -ABS
	1/95-02				**PF209**		Ø 23,81	10-14Q, -ABS
	94-				**CT016**		Ø 25,40	Ch -S16206244, Alu, Rear Disc Brake, 10-14Q, -ABS
	94-				**PZ155**	Valeo	Ø 15,87	
2.0 HDi Eng.RHV(DW10UTD) (62kW)	01-02		R		**CF181**		Ø 25,40	10-14Q
	01-02		R		**CF183**		Ø 28,60	18Q
	01-02				**PF205**		Ø 25,40	18Q, +ABS
	01-02				**PF208**		Ø 25,40	18Q, -ABS
	01-				**PZ155**	Valeo	Ø 15,87	
2.0i, 4WD Eng.RFW(XU10J2U) (80kW)	94-02		R		**CF182**	Loc	Ø 27,00	Rear Drum Brake
	96-		R		**CF181**		Ø 25,40	10-14Q
	96-		R		**CF183**		Ø 28,60	18Q
	2/94-12/94				**PF207**		Ø 22,20	10-14Q, +ABS
	1/95-02				**PF206**		Ø 23,81	10-14Q, +ABS
	2/94-02				**PF205**		Ø 25,40	18Q, +ABS
	2/94-12/94				**PF210**		Ø 22,20	10-14Q, -ABS
	1/95-02				**PF209**		Ø 23,81	10-14Q, -ABS
	2/94-02				**PF208**		Ø 25,40	18Q, -ABS
	94-				**CT016**		Ø 25,40	Ch -S16206244, Alu, Rear Disc Brake, 10-14-18Q, -ABS
	94-				**PZ155**	Valeo	Ø 15,87	
2.5 D, 4WD Eng.T9A(DJ5) (63kW)	94-02		R		**CF182**	Loc	Ø 27,00	Rear Drum Brake
	96-02		R		**CF181**		Ø 25,40	10-14Q
	96-02		R		**CF183**		Ø 28,60	18Q
	96-02				**PF206**		Ø 23,81	10-14Q, +ABS

CITROËN LCV

		Spare Parts	F/R	L/R	FRITECH ref.		DIMENSIONS mm.	NOTE
2.5 D, 4WD Eng.T9A(DJ5) (63kW)	96-02				**PF205**		Ø 25,40	18Q, +ABS
	96-02				**PF209**		Ø 23,81	10-14Q, -ABS
	96-02				**PF208**		Ø 25,40	18Q, -ABS
	94-				**CT016**		Ø 25,40	Ch -S16206244, Alu, Rear Disc Brake, 14-18Q, -ABS
	94-				**PZ155**	Valeo	Ø 15,87	
2.5 TD Eng.DK5-ATE (96kW)	95-02		R		**CF182**	Loc	Ø 27,00	Rear Drum Brake
2.5 TD, 4WD Eng.T8A(DJ5T) (76kW)	96-02		R		**CF182**	Loc	Ø 27,00	14Q, +ABS
	94-02		R		**CF182**	Loc	Ø 27,00	Rear Drum Brake
	96-02		R		**CF183**		Ø 28,60	18Q
	96-02				**PF206**		Ø 23,81	14Q, +ABS
	96-02				**PF205**		Ø 25,40	18Q, +ABS
	96-02				**PF209**		Ø 23,81	14Q, -ABS
	96-02				**PF208**		Ø 25,40	18Q, -ABS
	94-				**CT016**		Ø 25,40	Ch -S16206244, Alu, Rear Disc Brake, 14-18Q, -ABS
	94-				**PZ155**	Valeo	Ø 15,87	
2.5 TDi, 4WD Eng.THX(DJ5TED) (79kW)	96-00		R		**CF182**	Loc	Ø 27,00	14Q, +ABS
	96-00		R		**CF182**	Loc	Ø 27,00	Rear Drum Brake
	96-00		R		**CF183**		Ø 28,60	18Q
	96-00				**PF205**		Ø 25,40	18Q, +ABS
	96-00				**PF208**		Ø 25,40	18Q, -ABS
	96-				**CT016**		Ø 25,40	Ch -S16206244, Alu, Rear Disc Brake, 14-18Q, -ABS
	96-				**PZ155**	Valeo	Ø 15,87	
2.8 D Eng.8140.63(F28D) (64kW)	99-02		R		**CF182**	Loc	Ø 27,00	14Q
	99-02		R		**CF182**	Loc	Ø 27,00	Rear Drum Brake
	99-02		R		**CF183**		Ø 28,60	18Q
	-02				**PF526**	Bch	Ø 25,40	Ch 6194401-, -ABS, M/T
	99-				**PF206**		Ø 23,81	Ch -6194400, +ABS
	-02				**PF547**		Ø 25,40	Ch 6194401-, +ABS
	99-				**PF208**		Ø 25,40	Ch -6194400, -ABS
	99-10/01				**CT016**		Ø 25,40	Alu, Rear Disc Brake, 14-18Q, -ABS
	99-				**PZ155**	Valeo	Ø 15,87	
2.8 HDi, 4WD Eng.8140.43S (94kW)	00-02		R		**CF182**	Loc	Ø 27,00	Rear Drum Brake
	00-02		R		**CF183**		Ø 28,60	18Q
	00-02				**PF205**		Ø 25,40	18Q, +ABS
	00-02				**PF208**		Ø 25,40	18Q, -ABS
	00-				**CT016**		Ø 25,40	Ch -S16206244, Alu, Rear Disc Brake, 14-18Q, -ABS
	00-				**PZ155**	Valeo	Ø 15,87	
Jumper II (244)/ Relay 4/02-3/06								
2.0 Eng.XU10J2 (81kW)	4/02-		R		**CF182**	Loc	Ø 27,00	Rear Drum Brake
	4/02-				**PF526**	Bch	Ø 25,40	-ABS, M/T
	4/02-				**PF547**		Ø 25,40	+ABS
	02-				**PZ155**	Valeo	Ø 15,87	
2.0 bivalent Eng.XU10J2 (81kW)	2/03-		R		**CF182**	Loc	Ø 27,00	Rear Drum Brake
	03-				**PZ155**	Valeo	Ø 15,87	
2.0 HDi Eng.RHV(DW10UTD/DW10UTD) (62kW)	4/02-		R		**CF182**	Loc	Ø 27,00	Rear Drum Brake
	4/02-				**PF526**	Bch	Ø 25,40	-ABS, M/T
	4/02-				**PF547**		Ø 25,40	+ABS
	02-				**PZ155**	Valeo	Ø 15,87	
2.2 HDi Eng.4HY(DW12UTED4) (74kW)	4/02-		R		**CF182**	Loc	Ø 27,00	Rear Drum Brake
	4/02-				**PF526**	Bch	Ø 25,40	-ABS, M/T
	4/02-				**PF547**		Ø 25,40	+ABS
	02-				**PZ155**	Valeo	Ø 15,87	
2.8 HDi Eng.8140.43N (107kW)	5/04-				**PF526**	Bch	Ø 25,40	-ABS, M/T
	04-				**PZ155**	Valeo	Ø 15,87	
2.8 HDi, 4WD Eng.8140.43S (94kW)	02-06		R		**CF182**	Loc	Ø 27,00	Rear Drum Brake
	4/02-				**PF526**	Bch	Ø 25,40	-ABS, M/T
	4/02-				**PF547**		Ø 25,40	+ABS
	02-				**PZ155**	Valeo	Ø 15,87	

		Spare Parts	F/R	L/R	FRITECH ref.		DIMENSIONS mm.	NOTE
Jumper III 4/06-11/14								
2.2 HDi Eng.4HV(P22DTE) (74kW)	06-				**PF724**	Bch	Ø 26,99	Alu, 17-20Q, +ESP, +VDC
	06-				**PF876**	Bch	Ø 26,99	Alu, 17-20Q, -ESP, -VDC
	06-				**PF874**	Bch	Ø 25,40	Alu, 11-15Q, -VDC
	06-				**PF875**	Bch	Ø 25,40	Alu, 11-15Q, +VDC
2.2 Hdi 110 Eng.4H03 (81kW)	11-				**PF724**	Bch	Ø 26,99	Alu, 17-20Q, +ESP, +VDC
	11-				**PF876**	Bch	Ø 26,99	Alu, 17-20Q, -ESP, -VDC, M/T+A/T
	11-				**PF874**	Bch	Ø 25,40	Alu, 11-15Q, -VDC
	11-				**PF875**	Bch	Ø 25,40	Alu, 11-15Q, +VDC
2.2 Hdi 120 Eng.4HU(P22DTE) (88kW)	06-				**PF724**	Bch	Ø 26,99	Alu, 17-20Q, +ESP, +VDC
	06-				**PF876**	Bch	Ø 26,99	Alu, 17-20Q, -ESP, -VDC
	06-				**PF874**	Bch	Ø 25,40	Alu, 11-15Q, -VDC
	06-				**PF875**	Bch	Ø 25,40	Alu, 11-15Q, +VDC
2.2 Hdi 130 Eng.4H03 (96kW)	11-				**PF724**	Bch	Ø 26,99	Alu, 17-20Q, +ESP, +VDC
	11-				**PF876**	Bch	Ø 26,99	Alu, 17-20Q, -ESP, -VDC, M/T+A/T
	11-				**PF874**	Bch	Ø 25,40	Alu, 11-15Q, -VDC
	11-				**PF875**	Bch	Ø 25,40	Alu, 11-15Q, +VDC
3.0 HDi Eng.F1CE0481D(F30DT) (115kW)	06-				**PF724**	Bch	Ø 26,99	Alu, 17-20Q, +ESP, +VDC
	06-				**PF876**	Bch	Ø 26,99	Alu, 17-20Q, -ESP, -VDC
	06-				**PF874**	Bch	Ø 25,40	Alu, 11-15Q, -VDC
	06-				**PF875**	Bch	Ø 25,40	Alu, 11-15Q, +VDC
3.0 HDi Eng.F1CE3481N (107kW)	10-				**PF724**	Bch	Ø 26,99	Alu, 17-20Q, +ESP, +VDC
	10-				**PF876**	Bch	Ø 26,99	Alu, 17-20Q, -ESP, -VDC, M/T+A/T
	10-				**PF874**	Bch	Ø 25,40	Alu, 11-15Q, -VDC
	10-				**PF875**	Bch	Ø 25,40	Alu, 11-15Q, +VDC
3.0 Hdi 180 Eng.F1CE3481E (130kW)	11-				**PF724**	Bch	Ø 26,99	Alu, 17-20Q, +ESP, +VDC
	11-				**PF876**	Bch	Ø 26,99	Alu, 17-20Q, -ESP, -VDC, M/T+A/T
	11-				**PF874**	Bch	Ø 25,40	Alu, 11-15Q, -VDC
	11-				**PF875**	Bch	Ø 25,40	Alu, 11-15Q, +VDC
Jumpy I (U6U) 10/95-12/06								
1.6, Van Eng.1580 SPI/220 A2.000 (58kW)	96-		R		**CF094**		Ø 19,05	Ch -8206, 8-9Q
					PF462	Bch	Ø 22,20	Ch 8207-, 8Q, -ABS
	96-				**PF196**	Bdx	Ø 22,20	Ch -8206, 8Q, +ABS
	96-				**PF197**	Bdx	Ø 22,20	8Q, -ABS
	96-				**PF217**		Ø 23,81	Ch -8206, 9Q, +ABS
	96-				**PF218**		Ø 23,81	9Q, -ABS
1.9 D Eng.D9B(XUD9A-U) (51kW)	96-		R		**CF094**		Ø 19,05	Ch -8206, 8-9Q
					PF462	Bch	Ø 22,20	Ch 8207-, 8Q, -ABS
	96-				**PF196**	Bdx	Ø 22,20	Ch -8206, 8Q, +ABS
	96-				**PF197**	Bdx	Ø 22,20	8Q, -ABS
	96-				**PF217**		Ø 23,81	Ch -8206, 9Q, +ABS
	96-				**PF218**		Ø 23,81	9Q, -ABS
1.9 D, Van Eng.WJZ(DW8) (51kW)	96-		R		**CF094**		Ø 19,05	Ch -8206, 8-9Q
					PF462	Bch	Ø 22,20	Ch 8207-, 8Q, -ABS
	96-				**PF196**	Bdx	Ø 22,20	Ch -8206, 8Q, +ABS
	96-				**PF197**	Bdx	Ø 22,20	8Q, -ABS
	96-				**PF217**		Ø 23,81	Ch -8206, 9Q, +ABS
	96-				**PF218**		Ø 23,81	9Q, -ABS
1.9 TD Eng.DHX(XUD9TF-BTF) (66kW)	95-		R		**CF094**		Ø 19,05	Ch -8206, 8-9Q
					PF462	Bch	Ø 22,20	Ch 8207-, 8Q, -ABS
	95-				**PF196**	Bdx	Ø 22,20	Ch -8206, 8Q, +ABS
	95-				**PF197**	Bdx	Ø 22,20	8Q, -ABS
	95-				**PF217**		Ø 23,81	Ch -8206, 9Q, +ABS
	95-				**PF218**		Ø 23,81	9Q, -ABS
1.9 TD, Flatbed Eng.D8B(XUD9TF) (68kW)	96-		R		**CF094**		Ø 19,05	Ch -8206, 8-9Q
					PF462	Bch	Ø 22,20	Ch 8207-, 8Q, -ABS
	96-				**PF196**	Bdx	Ø 22,20	Ch -8206, 8Q, +ABS
	96-				**PF197**	Bdx	Ø 22,20	8Q, -ABS
	96-				**PF217**		Ø 23,81	Ch -8206, 9Q, +ABS
	96-				**PF218**		Ø 23,81	9Q, -ABS
2.0 16v Eng.RFN(EW10J4) (100kW)	00-		R		**CF094**		Ø 19,05	
	3/00-				**PF385**	Bch	Ø 22,20	9Q, +ABS
	3/00-				**PF464**	Bch	Ø 23,81	9Q, +ABS
	3/00-				**PF429**	Bch	Ø 23,81	9Q, -ABS

CITROËN LCV

		Spare Parts	F/R	L/R	FRITECH ref.		DIMENSIONS mm.	NOTE
2.0 16v (102kW)	3/00-				**PF464**	Bch	Ø 23,81	9Q, +ABS
	3/00-				**PF429**	Bch	Ø 23,81	9Q, -ABS
2.0 HDi, Van Eng.RHW/RHZ(DW10ATED) (80kW)	00-		R		**CF094**		Ø 19,05	
	00-				**PF385**	Bch	Ø 22,20	9Q, +ABS
	00-				**PF464**	Bch	Ø 23,81	9Q, +ABS
	00-				**PF429**	Bch	Ø 23,81	9Q, -ABS
	3/00-				**PZ130**	Fte	Ø 19,05	Alu
2.0 HDi, Van, Flatbed Eng.RHX(DW10BTED)	10/99-		R		**CF094**		Ø 19,05	
(69kW)	10/99-				**PF385**	Bch	Ø 22,20	9Q, +ABS
	10/99-				**PF464**	Bch	Ø 23,81	9Q, +ABS
	10/99-				**PF429**	Bch	Ø 23,81	9Q, -ABS
	10/99-				**PZ130**	Fte	Ø 19,05	Alu
Jumpy II/Dispatch 1/07-								
1.6 HDi, Van Eng.9HU(DV6UTED4)/9HH/HM	07-		R		**CF830**	Trw	Ø 22,20	Alu
(66kW)	07-				**PF877**	Ate	Ø 25,40	Alu, +ABS, -ESP, LHD
	07-				**PF878**	Ate	Ø 25,40	Alu, +ESP
2.0 16v Eng.RFH(EW10A) (103kW)	07-				**PF877**	Ate	Ø 25,40	Alu, +ABS, -ESP, LHD
	07-				**CZ103**	Fte	Ø 19,05	Pla
2.0 Hdi 125 Eng.DW10CD (94kW)	11-				**PF878**	Ate	Ø 25,40	Alu, +ESP
	11-				**PF877**	Ate	Ø 25,40	Alu, -ESP
2.0 HDi 16v Eng.RHH(DW10CTED4) (120kW)	10-				**PF877**	Ate	Ø 25,40	Alu, +ABS, -ESP, LHD
2.0 HDi 16v Eng.RHR(DW10BTED4) (100kW)	07-		R		**CF830**	Trw	Ø 22,20	Alu
	07-				**PF877**	Ate	Ø 25,40	Alu, +ABS, -ESP, LHD
	07-				**PF878**	Ate	Ø 25,40	Alu, +ESP
2.0 Hdi 95 Eng.DW10CE (72kW)	11-				**PF878**	Ate	Ø 25,40	Alu, +ESP
	11-				**PF877**	Ate	Ø 25,40	Alu, -ESP
2.0 HDi, 4x4 Eng.RHK(DW10UTED4) (88kW)	07-		R		**CF830**	Trw	Ø 22,20	Alu
	07-				**PF877**	Ate	Ø 25,40	Alu, +ABS, -ESP, LHD
	07-				**PF878**	Ate	Ø 25,40	Alu, +ESP
Nemo (AA) 2/08-								
1.3 HDi Eng.FHZ(F13DTE5) (55kW)	10-		R		**CF827**	Loc	Ø 20,64	Alu
	10-				**PF793**	Bch	Ø 22,20	Alu, LHD
	10-				**PZ146**	Fte	Ø 15,87	Alu
1.4 Eng.KFV/KFT (54kW)	08-		R		**CF827**	Loc	Ø 20,64	Alu
	08-				**PF793**	Bch	Ø 22,20	Alu
	09-				**PZ146**	Fte	Ø 15,87	Alu
1.4 HDi Eng.8HS(DV4TD) (50kW)	08-		R		**CF827**	Loc	Ø 20,64	Alu
	08-				**PF793**	Bch	Ø 22,20	Alu
	09-				**PZ146**	Fte	Ø 15,87	Alu
Saxo Van 1/96-								
1.5 D Eng.TUD5/ B (40-44kW)	96-		R	L	**CF083**	Bdx	Ø 19,05	CRCI, -ABS
	96-		R	R	**CF084**	Bdx	Ø 19,05	CRCI, -ABS
	96-		R		**CF159**	Luc	Ø 20,64	Ch -8095, +ABS
			R		**CF162**	Luc	Ø 20,64	Ch 8096-, Alu, +ABS
	96-				**PF270**	Ate	Ø 20,64	Alu, -ABS
	96-				**PF227**	Bdx	Ø 19,05	-ABS, 4 Hole
	96-				**PF266**	Luc	Ø 20,64	Alu, +ABS
Synergie 1/94-7/02								
1.8i Eng.LFZ(XU7JP) (73kW)	97-		R		**CF094**		Ø 19,05	-ABS
	97-				**PF196**	Bdx	Ø 22,20	+ABS
	97-				**PF197**	Bdx	Ø 22,20	-ABS
1.9 TD Eng.DHY(XUD9TE) (68kW)	94-		R		**CF094**		Ø 19,05	
	94-				**PF217**		Ø 23,81	+ABS
	94-				**PF218**		Ø 23,81	-ABS
2.0 Eng.RFU(XU10J2C) (88kW)	94-		R		**CF094**		Ø 19,05	
	94-				**PF217**		Ø 23,81	+ABS
	94-				**PF218**		Ø 23,81	-ABS
2.0 T. Eng.RGX(XU10J2TE) (108kW)	94-				**PF217**		Ø 23,81	+ABS
	94-				**PF218**		Ø 23,81	-ABS

DACIA

Dokker 1/13-								
1.2 Tce Eng.H5F402 (84kW)	13-		R		**CF854**	Bch	Ø 22,00	Alu

		Spare Parts	F/R	L/R	FRITECH ref.		DIMENSIONS mm.	NOTE
1.5 DCi Eng.K9K612 (55kW)	13-		R		**CF854**	Bch	Ø 22,00	Alu
1.5 DCi Eng.K9K612 (66kW)	13-		R		**CF854**	Bch	Ø 22,00	Alu
1.6 LPG Eng.K7M828 (61kW)	13-		R		**CF854**	Bch	Ø 22,00	Alu
1.6 MPI Eng.K7M812 (61kW)	13-		R		**CF854**	Bch	Ø 22,00	Alu
Duster II 6/10-								
1.2 Tce, 4WD Eng.H5F404 (92kW)	13-		R		**CF869**		Ø 19,05	Alu
1.5 dCi Eng.K9K796 (63kW)	10-		R		**CF869**	Bch	Ø 19,05	Alu
	10-				**PF972**	Ate	Ø 22,20	Alu, +ABS, -ESP
1.5 dCi 4WD Eng.K9K898 (81kW)	10-		R	L	**CF873**	Bch	Ø 19,05	Alu
	10-		R	R	**CF904**	Bch	Ø 19,05	Alu
	10-				**PF972**	Ate	Ø 22,20	Alu, +ABS, -ESP, -ASR
1.5 dCi, 4WD Eng.K9K856/K9K858 (80kW)	13-		R	L	**CF873**	Bch	Ø 19,05	Alu
	13-		R	R	**CF904**	Bch	Ø 19,05	Alu
	13-				**PF972**	Ate	Ø 22,20	Alu, +ABS, -ESP, -ASR
1.5 dCi, 4WD Eng.K9K892/K9K894 (66kW)	10-		R		**CF869**	Bch	Ø 19,05	Alu
	10-				**PF972**	Ate	Ø 22,20	Alu, +ABS, -ESP, -ASR
1.5 dCi, 4WD Eng.K9K896/K9K898 (79kW)	10-		R		**CF869**	Bch	Ø 19,05	Alu
	10-				**PF972**	Ate	Ø 22,20	Alu, +ABS, -ESP, -ASR
1.6 16v LPG Eng.K4M696 (74-77kW)	11-		R		**CF869**	Bch	Ø 19,05	Alu
	11-				**PF972**	Ate	Ø 22,20	Alu, +ABS, -ESP
1.6, 4WD Eng.K4M606/ 690 (77kW)	10-		R	L	**CF873**	Bch	Ø 19,05	Alu
	10-		R	R	**CF904**	Bch	Ø 19,05	Alu
	10-		R		**CF869**	Bch	Ø 19,05	Alu
	10-				**PF972**	Ate	Ø 22,20	Alu, +ABS, -ESP, -ASR
Lodgy, Stepway 3/12-								
1.2 TCe Eng.H5F402 (85kW)	12-		R		**CF854**	Bch	Ø 22,00	Alu
1.5 DCi Eng.K9K612 (66kW)	12-		R		**CF854**	Bch	Ø 22,00	Alu
1.5 DCi Eng.K9K846 (79-80kW)	12-		R		**CF854**	Bch	Ø 22,00	Alu
1.6 Eng.K7MA8 (61kW)	12-		R		**CF854**	Bch	Ø 22,00	Alu
1.6 LPG Eng.K7M812 (61kW)	13-		R		**CF854**	Bch	Ø 22,00	Alu
Logan I, MCV 9/04-12/12								
1.2 Eng.D4F732 (56kW)	09-		R		**CF256**	Bch	Ø 17,46	Alu, +ABS
	09-		R		**CF144**	Bch	Ø 19,05	-ABS
	09-				**PF971**	Ate	Ø 20,64	Alu, +ABS
	09-				**PF710**		Ø 20,64	Alu, -ABS
1.4 Eng.K7J710 (55kW)	04-		R		**CF854**	Bch	Ø 22,00	Alu, SW, +ABS
	04-		R		**CF870**	Bch	Ø 17,46	Alu, -ABS
	9/04-		R		**CF144**	Bch	Ø 19,05	-ABS
	04-		R		**CF161**	Luc	Ø 17,78	+ABS
	04-				**PF617**		Ø 20,64	Alu, Exc. MCV/SW, +ABS
	04-				**PF710**		Ø 20,64	Alu, Exc. MCV/SW, -ABS
	08-				**PF899**		Ø 22,20	Alu, SW/MCV
1.5 dCi Eng.K9K790 (48kW)	05-		R		**CF870**	Bch	Ø 17,46	Alu, -ABS
	05-		R		**CF161**	Luc	Ø 17,78	+ABS
	05-				**PF617**		Ø 20,64	Alu, Exc. MCV/SW, +ABS
	05-				**PF710**		Ø 20,64	Alu, Exc. MCV/SW, -ABS
	08-				**PF899**		Ø 22,20	Alu, SW/MCV
1.5 dCi Eng.K9K792 (50kW)	06-		R		**CF144**	Bch	Ø 19,05	-ABS
	06-		R		**CF854**	Bch	Ø 22,00	Alu, SW
	06-		R		**CF161**	Luc	Ø 17,78	+ABS
	06-				**PF617**		Ø 20,64	Alu, Exc. MCV/SW, +ABS
	06-				**PF710**		Ø 20,64	Alu, Exc. MCV/SW, -ABS
	08-				**PF899**		Ø 22,20	Alu, SW/MCV
1.5 dCi Eng.K9K796 (63kW)	07-		R		**CF144**	Bch	Ø 19,05	-ABS
	07-		R		**CF870**	Bch	Ø 17,46	Alu
	07-		R		**CF854**	Bch	Ø 22,00	Alu, SW
	07-		R		**CF161**	Luc	Ø 17,78	+ABS
	07-				**PF617**		Ø 20,64	Alu, Exc. MCV/SW, +ABS
	07-				**PF710**		Ø 20,64	Alu, Exc. MCV/SW, -ABS
	08-				**PF899**		Ø 22,20	Alu, SW/MCV
1.5 dCi Eng.K9K892 (55kW)	10-		R		**CF256**	Bch	Ø 17,46	Alu
	10-				**PF971**	Ate	Ø 20,64	Alu, +ABS
	10-				**PF710**		Ø 20,64	Alu, -ABS

DACIA

		Spare Parts	F/R	L/R	FRITECH ref.		DIMENSIONS mm.	NOTE
1.5 dCi Eng.K9K892 (65kW)	10-		R		**CF256**	Bch	Ø 17,46	Alu, +ABS
	10-		R		**CF144**	Bch	Ø 19,05	-ABS
	10-				**PF971**	Ate	Ø 20,64	Alu, +ABS
	10-				**PF710**		Ø 20,64	Alu, -ABS
1.6 Eng.K7M710 (64kW)	04-		R		**CF854**	Bch	Ø 22,00	Alu, SW, +ABS
	04-		R		**CF869**	Bch	Ø 19,05	Alu, SW, -ABS
	9/04-		R		**CF144**	Bch	Ø 19,05	-ABS
	04-		R		**CF161**	Luc	Ø 17,78	+ABS
	04-				**PF617**		Ø 20,64	Alu, Exc. MCV/SW, +ABS
	04-				**PF710**		Ø 20,64	Alu, Exc. MCV/SW, -ABS
	08-				**PF899**		Ø 22,20	Alu, SW/MCV
1.6 Eng.K7M800 (62kW)	08-		R		**CF854**	Bch	Ø 22,00	Alu
	08-				**PF899**		Ø 22,20	Alu
1.6 16v Eng.K4M690/694 (77kW)	2/06-		R		**CF144**	Bch	Ø 19,05	-ABS
	06-		R		**CF854**	Bch	Ø 22,00	Alu, SW
	06-		R		**CF161**	Luc	Ø 17,78	+ABS
	06-				**PF617**		Ø 20,64	Alu, Exc. MCV/SW, +ABS
	06-				**PF710**		Ø 20,64	Alu, Exc. MCV/SW, -ABS
	08-				**PF899**		Ø 22,20	Alu, SW/MCV
Logan II, MCV 10/12-								
0.9 TCe Eng.H4B400 (66kW)	12-		R		**CF869**	Bch	Ø 19,05	Alu
1.2 Eng.D4F732 (55kW)	12-		R		**CF869**	Bch	Ø 19,05	Alu
1.2 GPL Eng.D4F734 (55kW)	13-		R		**CF869**	Bch	Ø 19,05	Alu
1.5 DCi Eng.K9K612 (55kW)	12-		R		**CF869**	Bch	Ø 19,05	Alu
1.5 DCi Eng.K9K612 (66kW)	12-		R		**CF869**	Bch	Ø 19,05	Alu
Sandero I, Stepway 6/08-12/12								
1.2 Eng.D4F732 (56kW)	09-		R		**CF870**	Bch	Ø 17,46	Alu, -ABS
	09-				**PF971**	Ate	Ø 20,64	Alu, +ABS
	09-				**PF710**		Ø 20,64	Alu, -ABS
1.2 LPG Eng.D4F732 (55kW)	08-		R		**CF256**	Bch	Ø 17,46	Alu
	08-				**PF971**	Ate	Ø 20,64	Alu, +ABS
	08-				**PF710**		Ø 20,64	Alu, -ABS
1.4 Eng.K7J710 (55kW)	08-		R		**CF870**	Bch	Ø 17,46	Alu, -ABS
	08-		R		**CF144**	Bch	Ø 19,05	
	08-		R		**CF161**	Luc	Ø 17,78	+ABS
	08-				**PF971**	Ate	Ø 20,64	Alu, +ABS
	08-				**PF710**		Ø 20,64	Alu, -ABS
1.4 Eng.K7J714 (55kW)	09-		R		**CF256**	Bch	Ø 17,46	Alu
	09-				**PF971**	Ate	Ø 20,64	Alu, +ABS
1.5 dCi Eng.K9K792 (50kW)	08-		R		**CF870**	Bch	Ø 17,46	Alu
	08-				**PF971**	Ate	Ø 20,64	Alu, +ABS
	08-				**PF710**		Ø 20,64	Alu, -ABS
1.5 dCi Eng.K9K796 (63kW)	08-		R		**CF870**	Bch	Ø 17,46	Alu
	08-				**PF971**	Ate	Ø 20,64	Alu, +ABS
	08-				**PF710**		Ø 20,64	Alu, -ABS
1.5 dCi Eng.K9K892 (55kW)	10-		R		**CF256**	Bch	Ø 17,46	Alu, +ABS
	10-				**PF971**	Ate	Ø 20,64	Alu, +ABS
	10-				**PF710**		Ø 20,64	Alu, -ABS
1.5 dCi, Stepway Eng.K9K892 (65kW)	10-		R		**CF256**	Bch	Ø 17,46	Alu, +ABS
	10-				**PF971**	Ate	Ø 20,64	Alu, +ABS
1.6 Eng.K7M710 (64kW)	08-		R		**CF870**	Bch	Ø 17,46	Alu, -ABS
	08-		R		**CF161**	Luc	Ø 17,78	+ABS
	08-				**PF971**	Ate	Ø 20,64	Alu, +ABS
	08-				**PF710**		Ø 20,64	Alu, -ABS
1.6, Stepway Eng.K7M800 (62kW)	10-		R		**CF256**	Bch	Ø 17,46	Alu, +ABS
	10-				**PF971**	Ate	Ø 20,64	Alu, +ABS
1.6, Stepway (62kW)	11-		R		**CF256**	Bch	Ø 17,46	Alu
	11-				**PF971**	Ate	Ø 20,64	Alu, +ABS
	11-				**PF710**		Ø 20,64	Alu, -ABS
Sandero II 1/13-								
0.9 TCe Eng.H4B400 (66kW)	13-		R		**CF256**	Bch	Ø 17,46	Alu
1.2 Eng.D4F732 (55kW)	13-		R		**CF256**	Bch	Ø 17,46	Alu
1.2 LPG Eng.D4F734 (55kW)	13-		R		**CF256**	Bch	Ø 17,46	Alu

DACIA

		Spare Parts	F/R	L/R	FRITECH ref.		DIMENSIONS mm.	NOTE
1.5 DCi Eng.K9K612 (55kW)	13-		R		**CF256**	Bch	Ø 17,46	Alu
1.5 DCi Eng.K9K612 (66kW)	13-		R		**CF256**	Bch	Ø 17,46	Alu

DACIA LCV

Logan Van, Pick-up 10/09-12/12								
1.5 DCi Eng.K9K792 (50kW)	09-		R		**CF854**	Bch	Ø 22,00	Alu
	09-				**PF972**	Ate	Ø 22,20	Alu, +ABS, -ESP
1.5 DCi Eng.K9K796 (63kW)	09-		R		**CF854**	Bch	Ø 22,00	Alu
	09-				**PF972**	Ate	Ø 22,20	Alu, +ABS, -ESP
1.5 DCi Eng.K9K892 (55kW)	10-		R		**CF854**	Bch	Ø 22,00	Alu
	10-				**PF972**	Ate	Ø 22,20	Alu, +ABS, -ESP
1.5 DCi Eng.K9K892 (65kW)	10-		R		**CF854**	Bch	Ø 22,00	Alu
	10-				**PF972**	Ate	Ø 22,20	Alu, +ABS, -ESP
1.6 Eng.K7M710 (64kW)	09-		R		**CF854**	Bch	Ø 22,00	Alu
	09-				**PF972**	Ate	Ø 22,20	Alu, +ABS, -ESP
1.6 Eng.K7M800 (62kW)	10-		R		**CF854**	Bch	Ø 22,00	Alu
	10-				**PF972**	Ate	Ø 22,20	Alu, +ABS, -ESP

DAEWOO

Cielo 2/95-								
1.5 Eng.A15MF (66kW)	95-		R		**CF074**		Ø 19,05	
	95-				**PF168**	Del(CT,CJ)	Ø 22,22	Alu
1.5 Eng.G15MF (55kW)	2/95-		R		**CF009**		Ø 17,46	
	2/95-				**PF168**	Del(CT,CJ)	Ø 22,22	Alu
Espero (KLEJ) 10/91-9/99								
1.5 Eng.G15MF/A15F (55kW)	97-		R		**CF074**		Ø 19,05	
	97-				**PF168**	Del(CT,CJ)	Ø 22,22	Alu
1.5 16v Eng.A15MF (66kW)	93-94		R		**CF074**		Ø 19,05	
	95-99		R		**CF074**		Ø 19,05	
	93-94				**PF168**	Del(CT,CJ)	Ø 22,22	Alu
	95-99				**PF168**	Del(CT,CJ)	Ø 22,22	Alu
1.8 Eng.C18LE (66-70kW)	95-97		R		**CF074**		Ø 19,05	
	95-97				**PF168**	Del(CT,CJ)	Ø 22,22	Alu
2.0 Eng.C20LE (77kW)	95-97		R		**CF074**		Ø 19,05	
	95-97				**PF168**	Del(CT,CJ)	Ø 22,22	Alu
2.0 Eng.C20NEF (74kW)	91-93		R		**CF074**		Ø 19,05	
	91-93				**PF168**	Del(CT,CJ)	Ø 22,22	Alu
2.0 Eng.C20SED (81kW)	93-94		R		**CF074**		Ø 19,05	
	93-94				**PF168**	Del(CT,CJ)	Ø 22,22	Alu
Kalos (KLAS) 9/02-								
1.2 Eng.B12S1 (53kW)	03-		R		**CF074**		Ø 19,05	
1.4 16v Eng.F14D3 (69kW)	03-		R		**CF074**		Ø 19,05	
1.4 16v Eng.F14S3 (61kW)	02-		R		**CF074**		Ø 19,05	
Korando, Cabrio (KJ) 1/99-								
2.3 Eng.M161.973 (105kW)	99-		R	L	**CF781**		Ø 22,20	
	99-		R	R	**CF095**		Ø 22,20	
2.9 D Eng.OM662 (72kW)	99-		R	L	**CF781**		Ø 22,20	
	99-		R	R	**CF095**		Ø 22,20	
2.9 TD Eng.OM662.910 (88kW)	99-		R	L	**CF781**		Ø 22,20	
	99-		R	R	**CF095**		Ø 22,20	
3.2 (Exc. Cabrio) Eng.M104.995 (156kW)	99-		R	L	**CF781**		Ø 22,20	
	99-		R	R	**CF095**		Ø 22,20	
Lacetti (KLAN) 2/04-12/06								
1.4 16v Eng.F14D3 (69kW)	04-				**PF871**		Ø 22,20	Alu, -ESP
1.6 Eng.F16D (80kW)	04-				**PF871**		Ø 22,20	Alu, -ESP
1.8 Eng.T18SED (90kW)	04-				**PF871**		Ø 22,20	Alu, -ESP
Lanos (KLAT) 5/97-1/03								
1.4 Eng.A13SMS (55kW)	97-		R		**CF009**		Ø 17,46	
	97-				**PF449**		Ø 20,64	Alu, +ABS
	97-				**PF452**		Ø 20,64	Alu, -ABS
1.5 Eng.A15SMS (63kW)	97-		R		**CF009**		Ø 17,46	
	97-				**PF449**		Ø 20,64	Alu, +ABS
	97-				**PF452**		Ø 20,64	Alu, -ABS

DAEWOO

		Spare Parts	F/R	L/R	FRITECH ref.		DIMENSIONS mm.	NOTE
1.6 16v Eng.A16DMS (78kW)	97-		R		**CF320**	Fte	Ø 20,64	Ch 447434-, Alu
	97-		R		**CF074**		Ø 19,05	
	97-				**PF444**		Ø 22,20	Alu, +ABS
	97-				**PF448**		Ø 22,20	Alu, -ABS
Matiz (KLYA) 9/98-1/05								
0.8 Eng.F8CV (38kW)			R		**CF678**		Ø 17,46	Ch 320904-
	98-				**PF443**		Ø 20,64	Ch -577030, Alu, +Fixing hole BFR, +ABS
	98-				**PF442**		Ø 20,64	Ch 577031-, Alu, -ABS
1.0 Eng.B10S1 (47kW)	1/03-1/05		R		**CF678**		Ø 17,46	
	1/03-				**PF442**		Ø 20,64	Alu, -ABS
Musso (FJ) 1/99-								
2.2 TD Eng.SY661LA (74kW)	99-		R	L	**CF781**		Ø 22,20	
	99-		R	R	**CF095**		Ø 22,20	
2.3 Eng.M111.970 (103kW)	99-		R	L	**CF781**		Ø 22,20	
	99-		R	R	**CF095**		Ø 22,20	
2.9 D Eng.OM662 (73kW)	99-99		R	L	**CF781**		Ø 22,20	
	99-99		R	R	**CF095**		Ø 22,20	
2.9 TD Eng.OM662.920 (88kW)	99-		R	L	**CF781**		Ø 22,20	
	99-		R	R	**CF095**		Ø 22,20	
3.2 V6 Eng.M104.992 (162kW)	99-		R	L	**CF781**		Ø 22,20	
	99-		R	R	**CF095**		Ø 22,20	
Nexia (KLETN) 2/95-8/97								
1.5 Eng.G15MF (55kW)	96-		R		**CF009**		Ø 17,46	
	96-				**PF168**	Del(CT,CJ)	Ø 22,22	Alu
1.5 16v Eng.A15MF (66kW)	2/95-		R		**CF074**		Ø 19,05	
	2/95-				**PF168**	Del(CT,CJ)	Ø 22,22	Alu
1.8 Eng.C18LE (74kW)	10/95-		R		**CF074**		Ø 19,05	
	10/95-				**PF168**	Del(CT,CJ)	Ø 22,22	Alu
Nubira (KLAJ), SW 5/97-7/03								
1.6 16v Eng.616L (78kW)	97-		R		**CF679**		Ø 20,64	
	09/97-				**PF444**		Ø 22,20	Alu, +ABS
	97-				**PF448**		Ø 22,20	Alu, -ABS
1.6 16v Eng.A16DMS (76kW)	00-		R		**CF679**		Ø 20,64	
1.6 16v SW Eng.A16DMS (66kW)	97-		R		**CF679**		Ø 20,64	
2.0 16v Eng.X20SED (98kW)	09/97-				**PF444**		Ø 22,20	Alu, +ABS
Nubira (KLAN) 7/03-12/04								
1.6 16v Eng.F16D3 (80kW)	7/03-		R		**CF679**		Ø 20,64	
1.8 Eng.C18SED (90kW)	03-		R		**CF679**		Ø 20,64	
Rexton 4/02-								
2.9 TD Eng.OM662.925 (88kW)	02-		R	L	**CF781**		Ø 22,20	
	02-		R	R	**CF095**		Ø 22,20	
Rezzo 1/00-12/04								
1.6 16v Eng.A16DMS (78kW)	00-		R		**CF864**	Luc	Ø 20,64	
1.8 Eng.A18DMS (72kW)	00-		R		**CF864**	Luc	Ø 20,64	
1.8 Eng.F18D2 (67kW)	00-		R		**CF864**	Luc	Ø 20,64	
1.8 Eng.F18N2 (74kW)	00-		R		**CF864**	Luc	Ø 20,64	
2.0 16v Eng.T20SED (89kW)	00-		R		**CF864**	Luc	Ø 20,64	
2.0 16v Eng.T20SED4 (94kW)	00-		R		**CF864**	Luc	Ø 20,64	
Tacuma (KLAU) 9/00-12/04								
1.6 16v Eng.A16DMS (78kW)	00-05		R		**CF864**		Ø 20,64	
Tico II (KLY3) 2/95-12/00								
0.8 Eng.F6CV (38kW)	96-00		R	L	**CF321**		Ø 17,46	
	96-00		R	R	**CF322**		Ø 17,46	
0.8 Eng.F8C (35kW)	2/95-		R	L	**CF321**		Ø 17,46	
	2/95-		R	R	**CF322**		Ø 17,46	

DAEWOO LCV

Matiz Van 1/98-12/05								
0.8 i Eng.F8CV (38kW)			R		**CF678**		Ø 17,46	Ch 320904-
	98-				**PF443**		Ø 20,64	Ch 577031-, Alu, -Fixing hole BFR, +ABS
	98-				**PF442**		Ø 20,64	Ch 577031-, Alu, -ABS

DAF TRUCK

		Spare Parts	F/R	L/R	FRITECH ref.		DIMENSIONS mm.	NOTE
33 7/67-9/74								
0.7 Eng.B74 (21kW)	67-		R		**CF262**	Loc	Ø 15,87	
	67-		R		**CF191**	Loc	Ø 19,05	
66 10/72-9/75								
1.1,SW Eng.110E (35kW)	73-		R		**CF076**		Ø 20,64	
Pilot								
1.9 D	96-		R		**CF202**		Ø 20,32	
Serie 200 (20 Q - 25,5 Q)								
1.7	89-96		R		**CF202**		Ø 20,32	
2.0	89-96		R		**CF202**		Ø 20,32	
Serie 400 Van 4/89-8/93								
2.0	89-96		R		**CF209**		Ø 15,87	Exc. Bus, V8 Police
2.5D 428-435 Eng.EN55 (53kW)	89-93		R		**CF209**		Ø 15,87	Exc. Bus, V8 Police
2.5TD 428-435 Eng.ET70 (71kW)	89-93		R		**CF209**		Ø 15,87	Exc. Bus, V8 Police
3.5 V8	89-96		R		**CF209**		Ø 15,87	Exc. Bus, V8 Police
Bus,V8 Police	89-96		R		**CF163**		Ø 17,46	

DAIHATSU

Charade III (G100, G101, G102) 3/87-1/93								
1.0 (G100) Eng.CB23 (38kW)	2/87-92		R	L	**CF307**		Ø 17,46	Alu
	2/87-92		R	R	**CF241**		Ø 17,46	Alu
1.0 (G100) Eng.CB90 (40-41kW)	89-92		R	L	**CF307**		Ø 17,46	Alu
	89-92		R	R	**CF241**		Ø 17,46	Alu
1.0 D (G101) Eng.CL11 (27kW)	2/87-92		R	L	**CF307**		Ø 17,46	Alu
	2/87-92		R	R	**CF241**		Ø 17,46	Alu
1.0 GTi (G100) Eng.CB80 (74kW)	2/87-92		R	L	**CF307**		Ø 17,46	Alu
	2/87-92		R	R	**CF241**		Ø 17,46	Alu
1.0 T. (G100) Eng.CB61 (50kW)	2/87-90		R	L	**CF307**		Ø 17,46	Alu
	2/87-90		R	R	**CF241**		Ø 17,46	Alu
1.0 TD (G101) Eng.CL61 (35kW)	2/87-92		R	L	**CF307**		Ø 17,46	Alu
	2/87-92		R	R	**CF241**		Ø 17,46	Alu
1.3 4WD (G102) Eng.HCE (66kW)	10/88-11/93		R	L	**CF307**		Ø 17,46	Alu
	10/88-11/93		R	R	**CF241**		Ø 17,46	Alu
1.3 i (G102) Eng.HCE (66kW)	10/88-11/93		R	L	**CF307**		Ø 17,46	Alu
	10/88-11/93		R	R	**CF241**		Ø 17,46	Alu
Charade IV (G200, G202) 1/93-4/01								
1.3, 16v Eng.HC (44-55-62kW)	7/97-		R	L	**CF307**		Ø 17,46	Alu
	7/97-		R	R	**CF241**		Ø 17,46	Alu
Charade VI 7/11-12/13								
1.33 MMT Eng.1NRFE (74kW)	11-		R		**CF827**	Loc	Ø 20,64	Alu
Charmant (A) 11/81-7/87								
1.3 (A35) Eng.4K (48kW)	3/82-12/82		R		**CF412**		Ø 20,64	
1.6 (A45) Eng.2T (55kW)	81-84		R		**CF346**		Ø 20,64	
1.6 (A60) Eng.4A (57-60-61kW)	83-87		R		**CF346**		Ø 20,64	
Copen 9/03-12/11								
0.7 Eng.JB (47-50kW)	03-		R		**CF971**	Hosei	Ø 17,46	Alu
1.3 Eng.K3VE (63kW)	06-		R		**CF971**	Hosei	Ø 17,46	Alu
Cuore IV (L501) 1/95-12/99								
0.8 Eng.ED20 (32kW)	95-96		R		**CF968**	Hosei	Ø 17,46	Alu
Cuore V (L5) 11/96-10/98								
0.8 Eng.EFEL (31kW)	96-98		R		**CF968**	Hosei	Ø 17,46	Alu
Cuore VI (L7) 10/98-5/03								
1.0 i (L701) Eng.EJDE (41kW)	98-03		R		**CF968**	Hosei	Ø 17,46	Alu
	98-				**PF963**	Nissin	Ø 20,64	Alu
Cuore VII 5/03-9/07								
1.0 Eng.EJVE (43kW)	03-07		R		**CF985**		Ø 17,46	Alu
Cuore VIII 10/07-								
1.0 Eng.1KRFE (51kW)	07-		R		**CF985**		Ø 17,46	Alu
Gran Move (G3) 10/96-7/02								
1.5 16v (G303) Eng.HEEG (66kW)	2/97-7/98		R	L	**CF987**		Ø 17,46	Alu, -ABS
	2/97-7/98		R	R	**CF988**		Ø 17,46	Alu, -ABS

DAIHATSU

		Spare Parts	F/R	L/R	FRITECH ref.		DIMENSIONS mm.	NOTE
1.6 Eng.HDEP (70kW)	98-02		R	L	**CF987**		Ø 17,46	Alu, -ABS
	98-02		R	R	**CF988**		Ø 17,46	Alu, -ABS
1.6 16v (G301) Eng.HDEP (67kW)	98-02		R	L	**CF987**		Ø 17,46	Alu, -ABS
	98-02		R	R	**CF988**		Ø 17,46	Alu, -ABS
Materia 1/07-								
1.3 Eng.K3VE (67kW)	07-		R	L	**CF788**		Ø 17,46	Alu
	07-		R	R	**CF580**		Ø 17,46	Alu
1.5, 4WD Eng.3SZVE (76kW)	07-		R	L	**CF788**		Ø 17,46	Alu, Exc. 4WD
	07-		R	R	**CF580**		Ø 17,46	Alu, Exc. 4WD
	07-		R		**CF976**		Ø 17,46	Alu, 4WD
Move (L6, L9) 10/96-								
0.8 Eng.ED20 (32kW)	96-		R		**CF968**	Hosei	Ø 17,46	Alu
1.0 i Eng.EJDE (41kW)	98-		R		**CF968**	Hosei	Ø 17,46	Alu
Sirion (M1) 4/98-1/05								
1.0 i, 4WD Eng.EJDE (40-41kW)	98-00		R	L	**CF980**	Nissin	Ø 17,46	Alu
	98-00		R	R	**CF1024**	Nissin	Ø 17,46	Alu
	98-00		R		**CF971**	Hosei	Ø 17,46	Alu
	98-				**PF963**	Nissin	Ø 20,64	Alu
1.0, 4WD Eng.EJVE (43kW)	00-		R		**CF971**	Hosei	Ø 17,46	Alu
	98-				**PF963**	Nissin	Ø 20,64	Alu
1.3 DVVT 16v, 4WD Eng.K3VE (75kW)	01-05		R		**CF971**	Hosei	Ø 17,46	Alu
1.3 Sport, 4WD Eng.K3VE2 (75kW)	00-05		R	L	**CF980**	Nissin	Ø 17,46	Alu
	00-05		R	R	**CF1024**	Nissin	Ø 17,46	Alu
	00-05		R		**CF971**	Hosei	Ø 17,46	Alu
	98-				**PF963**	Nissin	Ø 20,64	Alu
Sirion (M3) 1/05-								
1.0, 4WD Eng.1KRFE (51kW)	05-		R	L	**CF788**		Ø 17,46	Alu
	05-		R	R	**CF580**		Ø 17,46	Alu
1.3 4WD Eng.K3VE (64kW)	05-		R	L	**CF788**		Ø 17,46	Alu
	05-		R	R	**CF580**		Ø 17,46	Alu
1.3, 4WD Eng.K3VE (67kW)	08		R	L	**CF788**		Ø 17,46	Alu, Exc. 4WD
	08-		R	R	**CF580**		Ø 17,46	Alu, Exc. 4WD
	08-		R		**CF980**	Nissin	Ø 17,46	Alu, Only 4WD
1.5 Eng.3SZVE (76kW)	07-		R	L	**CF788**		Ø 17,46	Alu
	07-		R	R	**CF580**		Ø 17,46	Alu
Terios I (J1) 10/97-11/05								
1.3 Eng.K3VE (63kW)	01-		R	L	**CF824**	Aisin	Ø 20,64	
	01-		R	R	**CF823**	Aisin	Ø 20,64	
	01-05				**PF938**		Ø 22,20	Alu, -ABS
1.3 4WD Eng.HEEJ (61kW)	97-00		R	L	**CF824**	Aisin	Ø 20,64	
	97-00		R	R	**CF823**	Aisin	Ø 20,64	
	97-00				**PF938**		Ø 22,20	Alu, -ABS
1.3 4WD Eng.K3VE (63kW)	00-		R	L	**CF824**	Aisin	Ø 20,64	
	00-		R	R	**CF823**	Aisin	Ø 20,64	
	00-05				**PF938**		Ø 22,20	Alu, -ABS
Terios II (J2) / Bego 11/05-								
1.3, 4WD Eng.K3VE (63kW)	05-		R	L	**CF824**	Aisin	Ø 20,64	
	05-		R	R	**CF823**	Aisin	Ø 20,64	
	05-		R		**CF798**		Ø 19,05	Alu
1.5 Eng.3SZVE (77kW)	06-		R		**CF798**		Ø 19,05	Alu
1.5 4WD Eng.3SZVE (77kW)	5/09-		R		**CF798**		Ø 19,05	Alu
Trevis 6/06-								
1.0 Eng.EJVE (43kW)	06-		R		**CF968**	Hosei	Ø 17,46	Alu
YRV (M2) 2/01-1/05								
1.0 Eng.EJVE (43kW)	01-		R		**CF971**	Hosei	Ø 17,46	Alu
	98-				**PF963**	Nissin	Ø 20,64	Alu
1.3 Eng.K3VE (64kW)	01-		R	L	**CF980**	Nissin	Ø 17,46	Alu
	01-		R	R	**CF1024**	Nissin	Ø 17,46	Alu
	01-		R		**CF971**	Hosei	Ø 17,46	Alu
	98-				**PF963**	Nissin	Ø 20,64	Alu
1.3, 4WD Eng.K3VE (63kW)	01-		R	L	**CF980**	Nissin	Ø 17,46	Alu
	01-		R	R	**CF1024**	Nissin	Ø 17,46	Alu
	01-		R		**CF971**	Hosei	Ø 17,46	Alu
	98-				**PF963**	Nissin	Ø 20,64	Alu

		Spare Parts	F/R	L/R	FRITECH ref.		DIMENSIONS mm.	NOTE
Hijet II (U60) 1/92-								
1.0 i Eng.CB42 (35kW)	92-		R		**CF324**		Ø 17,46	
1.2 D Eng.LDW12 (26kW)	92-		R		**CF324**		Ø 17,46	
1.3 i 16v Eng.HCES/ HCE (48kW)	92-		R		**CF324**		Ø 17,46	
1.4 D Eng.LDW14 (28kW)	92-		R		**CF324**		Ø 17,46	

DODGE

400								
All models	82-83		R		**CF402**		Ø 15,87	
600								
All models	83-88		R		**CF929**		Ø 14,28	2/4p
Aries								
All models	83-87		R		**CF929**		Ø 14,28	HDB
	81-89		R		**CF402**		Ø 15,87	
Caliber 6/06-12/12								
1.8 i 16v Eng.EBA (110kW)	06-		R		**CF994**		Ø 20,64	
	06-				**PF940**	Ate	Ø 20,64	Alu
2.0 CRD Eng.ECD/ ECE (103kW)	06-		R		**CF994**		Ø 20,64	
	06-				**PF940**	Ate	Ø 20,64	Alu
2.0 i 16v Eng.ECN (115kW)	06-		R		**CF994**		Ø 20,64	
	06-				**PF940**	Ate	Ø 20,64	Alu
Caravan								
All models	84-95		R		**CF319**		Ø 19,05	
Challenger								
All models	81-83		R	L	**CF398**		Ø 20,64	
	81-83		R	R	**CF399**		Ø 20,64	
Colt								
1.5	75-79		R	L	**CF378**	Mit.	Ø 19,05	2/4p
	75-79		R	R	**CF379**	Mit.	Ø 19,05	2/4p
	79-90		R		**CF269**		Ø 19,05	Exc. SW, 2/4p
1.6	75-91		R	L	**CF378**	Mit.	Ø 19,05	2/4p
	75-91		R	R	**CF379**	Mit.	Ø 19,05	2/4p
	79-90		R		**CF269**		Ø 19,05	Exc. SW, 2/4p
2.0	85-91		R	L	**CF378**	Mit.	Ø 19,05	
	85-91		R	R	**CF379**	Mit.	Ø 19,05	
Daytona								
All models	84-88		R		**CF929**		Ø 14,28	
	90-93		R		**CF402**		Ø 15,87	
Dynasty								
All models	88-89		R		**CF402**		Ø 15,87	
Lancer								
All models	85-88		R		**CF402**		Ø 15,87	
Mini Ram Van								
All models	84-88		R		**CF319**		Ø 19,05	
Neon								
All models	95-96		R		**CF402**		Ø 15,87	
Nitro 6/07-12/12								
2.8 CRD, 4WD Eng.ENR/ ENS (130kW)	07-				**PF939**	Bch	Ø 26,99	Alu
4.0 4WD Eng.EGS (191kW)	07-				**PF939**	Bch	Ø 26,99	Alu
Omni								
All models	84-87		R		**CF929**		Ø 14,28	Only Shelby Charger, GLH
	78-90		R		**CF402**		Ø 15,87	Exc. Shelby Charger, GLH 84-87
Shadow								
All models	87-94		R		**CF402**		Ø 15,87	
Spirit 1/91-12/99								
All models	1/89-12/89		R		**CF402**		Ø 15,87	
Stratus								
All models	-		R		**CF402**	Luc	Ø 15,87	
Vista								
1.6	85-91		R	L	**CF378**	Mit.	Ø 19,05	
	85-91		R	R	**CF379**	Mit.	Ø 19,05	

DODGE

		Spare Parts	F/R	L/R	FRITECH ref.		DIMENSIONS mm.	NOTE
2.0	85-91		R	L	**CF378**	Mit.	Ø 19,05	
	85-91		R	R	**CF379**	Mit.	Ø 19,05	

DODGE TRUCK

AD100 - AD150								
All models	84-89		R	L	**CF949**		Ø 25,40	12Inch Brake
	84-89		R	R	**CF950**		Ø 25,40	12Inch Brake
B100 - 150 - 200 - 250 - 300 - 350 - 400								
All models	78-00		R	L	**CF949**		Ø 25,40	12Inch Brake
	78-00		R	R	**CF950**		Ø 25,40	12Inch Brake
D100 - 150 - 200 - 250 - 300 - 350 - 400 - 450								
All models	69-93		R	L	**CF949**		Ø 25,40	12Inch Brake
	69-93		R	R	**CF950**		Ø 25,40	12Inch Brake
D50 - Ram 50								
All models	79-86		R	L	**CF299**		Ø 20,64	
	79-86		R	R	**CF298**		Ø 20,64	
Dakota								
All models	00-		R	L	**CF949**		Ø 25,40	11Inch Brake
	00-		R	R	**CF950**		Ø 25,40	11Inch Brake
	86-99		R		**CF319**		Ø 19,05	
Durango								
All models	00-		R	L	**CF949**		Ø 25,40	
	00-		R	R	**CF950**		Ø 25,40	
M300 - 400								
All models	74-79		R	L	**CF949**		Ø 25,40	12Inch Brake
	74-79		R	R	**CF950**		Ø 25,40	12Inch Brake
Plymouth Truck								
PB 300 1 Ton	78-83		R	L	**CF436**		Ø 22,20	
	78-83		R	R	**CF437**		Ø 22,20	
Plymouth Truck Voyager								
All models	84-89		R		**CF783**		Ø 19,05	
Raider								
All models	78-83		R	L	**CF299**		Ø 20,64	
	78-83		R	R	**CF298**		Ø 20,64	
Ram 1500 - 2500								
All models	94-99		R		**CF954**		Ø 23,81	
Rampage								
All models	82-84		R		**CF402**		Ø 15,87	
W100 - 150 - 200 - 250 - 300 - 350 - 400								
All models	69-93		R	L	**CF949**		Ø 25,40	12Inch Brake
	69-93		R	R	**CF950**		Ø 25,40	12Inch Brake

FIAT

1000er-Serie 7/53-3/69								
1.1 (29kW)			F		**CF594**		Ø 28,57	
	53-61		R		**CF002**		Ø 19,05	
			R		**CF281**		Ø 22,22	
1.3 (45kW)	61-67		R		**CF487**		Ø 22,20	
					CZ005		Ø 19,05	Alu
					CZ101		Ø 19,05	
					PZ010		Ø 19,05	Alu
					PZ111		Ø 19,05	
1.5 Eng.115 (55kW)	64-68		R		**CF487**		Ø 22,20	
					CZ005		Ø 19,05	Alu
					CZ101		Ø 19,05	
					PZ010		Ø 19,05	Alu
					PZ111		Ø 19,05	
1.5 (49kW)	61-69		R		**CF487**		Ø 22,20	
					CZ005		Ø 19,05	Alu
					CZ101		Ø 19,05	
					PZ010		Ø 19,05	Alu
					PZ111		Ø 19,05	

		Spare Parts	F/R	L/R	FRITECH ref.		DIMENSIONS mm.	NOTE
124 7/66-7/75								
1.2, SW Eng.124A.000 (48kW)	73-75				**PF015**		Ø 19,05	(<->)
	73-75				**CT001**	Benditalia	Ø 25,40	Alu
1.5 Special Eng.124B2.000 (55kW)	73-75				**PF015**		Ø 19,05	(<->)
	73-75				**CT001**	Benditalia	Ø 25,40	Alu
1.6 Special T Eng.132A9/ AC9 (70kW)	73-75				**PF015**		Ø 19,05	(<->)
	73-75				**CT001**	Benditalia	Ø 25,40	Alu
124 Coupe 6/67-2/76								
1.6 Sport Eng.132AC.000 (74-76-80kW)	72-75				**PF015**		Ø 19,05	(<->)
	72-75				**CT001**	Benditalia	Ø 25,40	Alu
124 Spider 1/66-9/85								
1.6 Sport Eng.125BC (81kW)	69-73				**PF015**		Ø 19,05	(<->)
	69-73				**CT001**	Benditalia	Ø 25,40	Alu
1.6 Sport Eng.132AC.000 (74-76-80kW)	69-74				**PF015**		Ø 19,05	(<->)
	69-74				**CT001**	Benditalia	Ø 25,40	Alu
1.8 Sport (82kW)	73-75				**PF015**		Ø 19,05	(<->)
	73-75				**CT001**	Benditalia	Ø 25,40	Alu
1.8 Sport CS1 Eng.132AC1 (84-87kW)	72-77				**PF015**		Ø 19,05	(<->)
	72-77				**CT001**	Benditalia	Ø 25,40	Alu
2.0 Europa Volumex Eng.232R14 (99kW)	83-85				**PF116**		Ø 22,20	
125 7/67-3/74								
1.6 Eng.125A.000 (66kW)	67-74				**PF045**		Ø 19,05	LHD
	67-74				**PF073**		Ø 19,05	RHD
	67-74				**CT001**	Benditalia	Ø 25,40	Alu
1.6 Special Eng.125B.000 (74kW)	69-73				**PF045**		Ø 19,05	LHD
	69-73				**PF073**		Ø 19,05	RHD
	69-73				**CT001**	Benditalia	Ø 25,40	Alu
126 9/72-9/00								
0.6 Eng.126A.000 (17kW)	73-		F		**CF595**		Ø 23,81	Ch 5049226-
	9/72-9/76		F		**CF592**		Ø 23,81	
	9/72-9/76		R		**CF593**		Ø 15,72	
	9/72-9/76				**PF013**		Ø 19,05	
0.6 Eng.126AB.000 (13-17-18kW)	73-		F		**CF595**		Ø 23,81	Ch 5049226-
0.65 Eng.126A1.000/ 126A1.048 (17kW)	-87		F		**CF595**		Ø 23,81	Ch 5049226-
	-87		R		**CF002**		Ø 19,05	
					PF013		Ø 19,05	Vett -6195908
	-87				**PF004**		Ø 19,05	Vett 6195909-
0.7 Eng.126A2.000/ 126A2.048 (19kW)	9/87-		F		**CF595**		Ø 23,81	
	9/87-		R		**CF002**		Ø 19,05	
	9/87-				**PF004**		Ø 19,05	
127 6/71-12/86								
0.9 Eng.100GL.000 (33kW)	10/82-83		R		**CF004**		Ø 19,05	
	71-82		R		**CF002**		Ø 19,05	
	71-77				**PF047**		Ø 19,05	LHD
	71-77				**PF049**		Ø 19,05	
	78-83				**PF050**		Ø 19,05	
	71-83				**CT001**	Benditalia	Ø 25,40	Alu
0.9 Eng.100GL.048 (29kW)	71-77		R		**CF002**		Ø 19,05	
	71-77				**PF014**		Ø 19,05	
	71-77				**CT001**	Benditalia	Ø 25,40	Alu
1.0 , Panorama Eng.127A.000 (37kW)	10/82-86		R		**CF004**		Ø 19,05	
	77-82		R		**CF002**		Ø 19,05	
	-77				**PF047**		Ø 19,05	LHD
	-77				**PF049**		Ø 19,05	
	78-86				**PF050**		Ø 19,05	
	77-86				**CT001**	Benditalia	Ø 25,40	Alu
1.0 Sport Eng.127A1.000 (51kW)	6/78-		R		**CF002**		Ø 19,05	Vett -2545660
	6/78-9/82				**PF074**		Ø 19,05	
	6/78-9/82				**CT001**	Benditalia	Ø 25,40	Alu
1.3 Eng.127A3.000 (55kW)	10/82-83		R		**CF004**		Ø 19,05	
	2/82-9/82		R		**CF002**		Ø 19,05	
	2/82-83				**PF074**		Ø 19,05	
	10/82-83				**CT001**	Benditalia	Ø 25,40	Alu

FIAT

		Spare Parts	F/R	L/R	FRITECH ref.		DIMENSIONS mm.	NOTE
1.3 D, Panorama Eng.127A5.000 (33kW)	10/82-		R		**CF004**		Ø 19,05	
	-9/82		R		**CF002**		Ø 19,05	
	-9/82				**PF075**		Ø 19,05	
	-9/82				**CT001**	Benditalia	Ø 25,40	Alu
128 3/69-12/84								
1.1, Familiare Eng.128A.000 (40kW)	69-84		R		**CF002**		Ø 19,05	
	73-				**PF044**		Ø 19,05	Vett -2318532, +Servo
	73-				**PF013**		Ø 19,05	Vett -2318532
					PF003		Ø 19,05	Vett 2318533-
	72-				**CT001**	Benditalia	Ø 25,40	Alu
1.3 Coupe, Berlinetta Eng.128AC.000 (54-55kW)	72-79		R		**CF002**		Ø 19,05	
	72-				**PF044**		Ø 19,05	Vett -2318532, +Servo
	72-				**PF013**		Ø 19,05	Vett -2318532
					PF003		Ø 19,05	Vett 2318533-
	72-				**CT001**	Benditalia	Ø 25,40	Alu
1.3 Rally Eng.128AC.000 (49kW)	71-76		R		**CF002**		Ø 19,05	
	71-				**PF044**		Ø 19,05	Vett -2318532, +Servo
	71-				**PF013**		Ø 19,05	Vett -2318532
					PF003		Ø 19,05	Vett 2318533-
	71-				**CT001**	Benditalia	Ø 25,40	Alu
1.3 Sport, Familiare Eng.128A1.000 (44kW)	74-84		R		**CF002**		Ø 19,05	
	74-				**PF044**		Ø 19,05	Vett -2318532, +Servo
	74-				**PF013**		Ø 19,05	Vett -2318532
					PF003		Ø 19,05	Vett 2318533-
	74-				**CT001**	Benditalia	Ø 25,40	Alu
131 10/74-12/84								
1.3 Mirafiori Eng.131A6.000 (40kW)	-81		R		**CF357**		Ø 22,22	Ch 1110250-
	74-81		R		**CF259**		Ø 22,22	
	74-81				**PF072**		Ø 19,05	
	74-81				**CT002**		Ø 25,40	Alu, M10x1,25
	74-81				**CT007**		Ø 25,40	Alu, M10x1
1.3 Mirafiori Eng.131A7.000 (48kW)	74-81		R		**CF259**		Ø 22,22	
1.3 Mirafiori Eng.131AB.000 (41kW)	74-81		R		**CF259**		Ø 22,22	
1.3 Super Mirafiori Eng.131B.000/ A7/ B7 (57kW)	-80		R		**CF357**		Ø 22,22	Ch 1110250-
	74-81		R		**CF259**		Ø 22,22	
	78-80				**PF072**		Ø 19,05	
	78-80				**CT002**		Ø 25,40	Alu, M10x1,25
1.4 Eng.131C1.000 (51kW)	-84		R		**CF357**		Ø 22,22	Ch 1110250-
	74-81		R		**CF259**		Ø 22,22	
	80-84				**PF072**		Ø 19,05	
	80-82				**CT002**		Ø 25,40	Alu, M10x1,25
	82-84				**CT007**		Ø 25,40	Alu, M10x1
1.4 Eng.131C1.000 (55kW)	74-81		R		**CF259**		Ø 22,22	
1.6 Mirafiori Eng.131A1.000/ AF1/ B1 (55kW)	-81		R		**CF357**		Ø 22,22	Ch 1110250-
	74-81		R		**CF259**		Ø 22,22	
	74-81				**PF072**		Ø 19,05	
	74-81				**CT002**		Ø 25,40	Alu, M10x1,25
1.6 Mirafiori Eng.131C2.000 (63kW)	74-81		R		**CF259**		Ø 22,22	
1.6 Super Mirafiori Eng.131B1.000 (72kW)	74-81		R		**CF259**		Ø 22,22	
1.6 Super Mirafiori Eng.131C3.000 (71kW)	-84		R		**CF357**		Ø 22,22	Ch 1110250-
	74-81		R		**CF259**		Ø 22,22	
	78-84				**PF072**		Ø 19,05	
	78-82				**CT002**		Ø 25,40	Alu, M10x1,25
	82-84				**CT007**		Ø 25,40	Alu, M10x1
2.0 Abarth Rally Eng.131B2.000 (103kW)	74-81		R		**CF259**		Ø 22,22	
	76-80				**PF072**		Ø 19,05	
	76-80				**CT002**		Ø 25,40	Alu, M10x1,25
2.0 D Eng.8144.65 (44kW)	-84		R		**CF357**		Ø 22,22	Ch 1110250-
	74-81		R		**CF259**		Ø 22,22	
	78-84				**PF072**		Ø 19,05	
	78-82				**CT002**		Ø 25,40	Alu, M10x1,25
	82-84				**CT007**		Ø 25,40	Alu, M10x1
2.0 Racing Eng.131B2.000 (85kW)	74-81		R		**CF259**		Ø 22,22	
	78-81				**PF072**		Ø 19,05	

		Spare Parts	F/R	L/R	FRITECH ref.		DIMENSIONS mm.	NOTE
2.0 Racing Eng.131B2.000 (85kW)	78-81				**CT002**		Ø 25,40	Alu, M10x1,25
2.0 Super Mirafiori Eng.131C4.000 (83kW)	74-81		R		**CF259**		Ø 22,22	
2.5 D Eng.8144.61 (53kW)	-84		R		**CF357**		Ø 22,22	Ch 1110250-
	74-81		R		**CF259**		Ø 22,22	
	78-84				**PF072**		Ø 19,05	
	78-82				**CT002**		Ø 25,40	Alu, M10x1,25
	82-84				**CT007**		Ø 25,40	Alu, M10x1
132 4/72-12/82								
1.6 Eng.132AB.000 (72kW)	74-82		R		**CF259**		Ø 22,22	
1.6 Eng.132BBOAO (72kW)	72-76		R		**CF259**		Ø 22,22	
1.6 Eng.132C.000 (65kW)	77-82		R		**CF259**		Ø 22,22	
1.6 Eng.132C.000 (72kW)	72-82		R		**CF259**		Ø 22,22	
	76-				**PF474**		Ø 19,05	LHD
	76-82				**PF045**		Ø 19,05	LHD
	76-82				**PF068**		Ø 19,05	RHD
	-82				**CT001**	Benditalia	Ø 25,40	Alu
1.6 Eng.132C6.000 (66kW)	77-81		R		**CF259**		Ø 22,22	
2.0 Eng.132C2.000 (82kW)	77-81		R		**CF259**		Ø 22,22	
	77-				**PF474**		Ø 19,05	LHD
	-77				**PF045**		Ø 19,05	LHD
	77-81				**PF068**		Ø 19,05	RHD
	-81				**CT001**	Benditalia	Ø 25,40	Alu
2.0 Eng.132DB.2A (82kW)	77-85		R		**CF259**		Ø 22,22	
2.0 D Eng.8144.65 (44kW)	78-82		R		**CF259**		Ø 22,22	
	78-				**PF474**		Ø 19,05	LHD
	78-82				**PF068**		Ø 19,05	RHD
	-82				**CT001**	Benditalia	Ø 25,40	Alu
2.0 GLS Eng.132C2.000 (84kW)	01/76-12/76		R		**CF259**		Ø 22,22	
2.0 i.e. Eng.132C3.000 (90kW)	80-82		R		**CF259**		Ø 22,22	
2.5 D Eng.8144.61 (53kW)	78-82		R		**CF259**		Ø 22,22	
	78-				**PF474**		Ø 19,05	LHD
	78-82				**PF068**		Ø 19,05	RHD
	-82				**CT001**	Benditalia	Ø 25,40	Alu
147 / Spazio 10/76-12/95								
1.0, Panorama Eng.127AB/ AJ (37kW)	76-12/82		R		**CF002**		Ø 19,05	
	82-		R		**CF004**		Ø 19,05	
1.1 Eng.138B.000 (40kW)	-12/82		R		**CF002**		Ø 19,05	
	-12/82				**PF075**		Ø 19,05	
	-12/82				**CT001**	Benditalia	Ø 25,40	Alu
1.3 D (36kW)	84-93		R		**CF002**		Ø 19,05	
1.3 D, Panorama Eng.127A5.000 (33kW)	-12/82		R		**CF002**		Ø 19,05	
	-12/82				**PF075**		Ø 19,05	
	-12/82				**CT001**	Benditalia	Ø 25,40	Alu
1.3 Rallye (53kW)	-12/82		R		**CF002**		Ø 19,05	
	83-7/83		R		**CF004**		Ø 19,05	
	-12/82				**PF075**		Ø 19,05	
	-12/82				**CT001**	Benditalia	Ø 25,40	Alu
1.3, Panorama Eng.127A2.011 (41-45kW)	7/80-82		R		**CF002**		Ø 19,05	
	83-7/83		R		**CF004**		Ø 19,05	
	-12/82				**PF075**		Ø 19,05	
	-12/82				**CT001**	Benditalia	Ø 25,40	Alu
500 1/57-1/76								
0.5 Eng.110.000 (11kW)	65-72		F		**CF589**		Ø 22,22	F-L
	72-74		F		**CF592**		Ø 23,81	R
	72-74		R		**CF593**		Ø 15,72	R
	65-72		R		**CF590**		Ø 19,05	F-L
	65-72				**PF010**		Ø 19,05	F-L
	72-74				**PF046**		Ø 19,05	R
0.5 Eng.110D.000 (13kW)	65-72		F		**CF589**		Ø 22,22	F-L
	72-74		F		**CF592**		Ø 23,81	R
	72-74		R		**CF593**		Ø 15,72	R
	65-72		R		**CF590**		Ø 19,05	F-L
	65-72				**PF010**		Ø 19,05	F-L
	72-74				**PF046**		Ø 19,05	R

FIAT

		Spare Parts	F/R	L/R	FRITECH ref.		DIMENSIONS mm.	NOTE
0.5 SW Eng.120.000 (11kW)	65-72		F		**CF589**		Ø 22,22	F-L
	72-74		F		**CF592**		Ø 23,81	R
	72-74		R		**CF593**		Ø 15,72	R
	65-72		R		**CF590**		Ø 19,05	F-L
	65-72				**PF010**		Ø 19,05	F-L
	72-74				**PF046**		Ø 19,05	R
0.6 Eng.126AB.000 (13kW)	65-72		F		**CF589**		Ø 22,22	F-L
	72-74		F		**CF592**		Ø 23,81	R
	72-74		R		**CF593**		Ø 15,72	R
	65-72		R		**CF590**		Ø 19,05	F-L
	65-72				**PF010**		Ø 19,05	F-L
	72-74				**PF046**		Ø 19,05	R
500 II L (199L) 9/12-								
0.9 Twinair Eng.199B6.000 (77kW)	12-		R		**CF1019**	Loc	Ø 20,64	Alu
	12-				**PZ146**	Fte	Ø 15,87	Alu
0.9 Twinair Nat. Power Eng.312A2.000 (62kW)	13-		R		**CF1019**	Loc	Ø 20,64	Alu
	13-				**PZ146**	Fte	Ø 15,87	Alu
1.3 MJT Eng.199B4.000 (62kW)	12-		R		**CF1019**	Loc	Ø 20,64	Alu
	12-				**PZ146**	Fte	Ø 15,87	Alu
1.3 MJT Eng.330A1.000 (70kW)	14-		R		**CF1019**	Loc	Ø 20,64	Alu
1.4 Eng.843A1.000 (70kW)	12-		R		**CF1019**	Loc	Ø 20,64	Alu
	12-				**PZ146**	Fte	Ø 15,87	Alu
1.4 T-Jet Eng.940B7.000 (88kW)	14-		R		**CF1019**	Loc	Ø 20,64	Alu
	14-				**PZ146**	Fte	Ø 15,87	Alu
1.4 T-Jet GPL Eng.940B7.000 (88kW)	14-		R		**CF1019**	Loc	Ø 20,64	Alu
	14-				**PZ146**	Fte	Ø 15,87	Alu
1.6 MJT Eng.199B5.000 (77kW)	13-		R		**CF1019**	Loc	Ø 20,64	Alu
	13-				**PZ146**	Fte	Ø 15,87	Alu
1.6 MJT Eng.955A3.000 (88kW)	13-		R		**CF1019**	Loc	Ø 20,64	Alu
	13-				**PZ146**	Fte	Ø 15,87	Alu
500 II, C (150, 312) 7/07-								
0.9 Twinair, Cabrio Eng.312A2.000 (63kW)	10-		R		**CF866**	Loc	Ø 20,64	Alu, +ABS, +ESP
	10-				**PF704**	Trw	Ø 22,20	Alu, +ABS
1.2 LPG Eng.169A4.000 (51kW)	11-		R		**CF866**	Loc	Ø 20,64	Alu, +ABS
	11-				**PF846**	Trw	Ø 20,64	Alu
1.2, Cabrio Eng.169A4.000 (51kW)	07-4/10		R		**CF067**	Bdx	Ø 20,64	+ABS
	5/10-		R		**CF866**	Loc	Ø 20,64	Alu, +ABS, +ESP
	07-				**PF846**	Trw	Ø 20,64	Alu, +ABS
1.3 MJT, Cabrio Eng.169A1.000 (55kW)	07/07-4/10		R		**CF067**	Bdx	Ø 20,64	+ABS
	5/10-		R		**CF866**	Loc	Ø 20,64	Alu, +ABS, +ESP
	07-				**PF846**	Trw	Ø 20,64	Alu, +ABS
1.3 MJT, Cabrio Eng.199B1.000 (70kW)	10-4/10		R		**CF067**	Bdx	Ø 20,64	
	5/10-		R		**CF866**	Loc	Ø 20,64	Alu, +ABS, +ESP
	07-				**PF704**	Trw	Ø 22,20	Alu, +ABS
1.4 16v, Cabrio Eng.169A3.000 (74kW)	07-				**PF846**	Trw	Ø 20,64	Alu, +ABS
	07-				**PF704**	Trw	Ø 22,20	Alu, +ABS
500L Living (199L) 9/13-								
0.9 Twinair Eng.199B6.000 (77kW)	13-		R		**CF1019**	Loc	Ø 20,64	Alu
	13-				**PZ146**	Fte	Ø 15,87	Alu
0.9 Twinair Nat. Pow. Eng.312A2.000 (62kW)	13-		R		**CF1019**	Loc	Ø 20,64	Alu
	13-				**PZ146**	Fte	Ø 15,87	Alu
1.3 MJT Eng.199B4.000 (62kW)	13-		R		**CF1019**	Loc	Ø 20,64	Alu
	13-				**PZ146**	Fte	Ø 15,87	Alu
1.4 i 16v Eng.843A1.000 (70kW)	12-		R		**CF1019**	Loc	Ø 20,64	Alu
	12-				**PZ146**	Fte	Ø 15,87	Alu
1.4 T-Jet Eng.940B7.000 (88kW)	14-		R		**CF1019**	Loc	Ø 20,64	Alu
	14-				**PZ146**	Fte	Ø 15,87	Alu
1.6 MJT Eng.199B5.000 (77kW)	13-		R		**CF1019**	Loc	Ø 20,64	Alu
	13-				**PZ146**	Fte	Ø 15,87	Alu
1.6 MJT Eng.955A3.000 (88kW)	13-		R		**CF1019**	Loc	Ø 20,64	Alu
	13-				**PZ146**	Fte	Ø 15,87	Alu
600 3/55-2/72								
0.6 (15kW)	68-72		F		**CF591**		Ø 22,22	D-E
	-70		F		**CF328**		Ø 28,57	DM-T

		Spare Parts	F/R	L/R	FRITECH ref.		DIMENSIONS mm.	NOTE
0.6 (15kW)	68-72		R		**CF002**		Ø 19,05	D-E
	-70		R		**CF329**		Ø 19,05	DM-T
					PF011		Ø 19,05	Ch 1873147-, D-E
	-70				**PF012**		Ø 25,40	DM-T
0.8 (D) Eng.100D (17kW)	68-72		F		**CF591**		Ø 22,22	D-E
	-70		F		**CF328**		Ø 28,57	DM-T
	68-72		R		**CF002**		Ø 19,05	D-E
	-70		R		**CF329**		Ø 19,05	DM-T
					PF011		Ø 19,05	Ch 1873147-, D-E
	-70				**PF012**		Ø 25,40	DM-T
850 7/64-12/72								
0.8 Eng.100GB (35kW)	68-72		R		**CF002**		Ø 19,05	
	68-72				**PF016**		Ø 19,05	
0.8 Berlina, super Eng.100G (27kW)	64-72		F		**CF591**		Ø 22,22	
	64-72		R		**CF002**		Ø 19,05	
	64-72				**PF016**		Ø 19,05	
0.8 Spider Eng.100GS (36kW)	65-68		R		**CF002**		Ø 19,05	
	65-68				**PF016**		Ø 19,05	
0.8 T-Familiare Eng.100GF (30kW)			F		**CF328**		Ø 28,57	
			R		**CF329**		Ø 19,05	
					PF012		Ø 25,40	
0.9 Eng.100GBC (38kW)	68-72		R		**CF002**		Ø 19,05	
	68-72				**PF016**		Ø 19,05	
0.9 Sport Spider Eng.100GBS (38kW)	68-72		R		**CF002**		Ø 19,05	
	68-72				**PF016**		Ø 19,05	
900 T/E 1/78-1/86								
0.9 Panorama, Pulmino Eng.100GF000 (26kW)	78-		F		**CF354**		Ø 31,75	Ch -357983, T-Fourgon
	-8/82		R		**CF351**		Ø 15,72	T-Fourgon, E Fourgon, Panorama
	9/82-86		R		**CF070**		Ø 15,72	E Fourgon, Panorama
	78-		R		**CF329**		Ø 19,05	Ch -357983, T-Fourgon
	78-				**PF012**		Ø 25,40	Ch -357983, T-Fourgon
Albea 1/03-12/05								
1.2 i Eng.188A4.000 (44kW)	03-		R		**CF583**	Ate	Ø 19,05	Alu
	03-05		R		**CF315**	Ate	Ø 19,05	
	03-05		R		**CF135**	Bdx	Ø 20,64	
	8/03-				**PF233**	Ate	Ø 22,20	+ABS
	-7/03				**PF232**	Ate	Ø 22,20	
	03-05				**PF186**	Bch	Ø 22,20	
1.2 i 16v Eng.188A5.000 (59kW)	03-		R		**CF583**	Ate	Ø 19,05	Alu
	03-05		R		**CF135**	Bdx	Ø 20,64	
	8/03-				**PF233**	Ate	Ø 22,20	+ABS
	-7/03				**PF232**	Ate	Ø 22,20	
	03-05				**PF186**	Bch	Ø 22,20	
1.3 JTD Eng.188A9.000 (51kW)	03-		R		**CF135**	Bdx	Ø 20,64	Ch -6499757
	03-		R		**CF827**	Loc	Ø 20,64	Ch 9499757-, Alu
	8/03-				**PF233**	Ate	Ø 22,20	+ABS
	-7/03				**PF232**	Ate	Ø 22,20	
	03-05				**PF186**	Bch	Ø 22,20	
1.4 Fire Eng.305A1.000 (57kW)	03-		R		**CF583**	Ate	Ø 19,05	Alu
1.6 i 16v Eng.182B6.000 (76kW)	03-05		R		**CF315**	Ate	Ø 19,05	
	03-05		R		**CF135**	Bdx	Ø 20,64	
	8/03-				**PF233**	Ate	Ø 22,20	+ABS
	-7/03				**PF232**	Ate	Ø 22,20	
	03-05				**PF186**	Bch	Ø 22,20	
Argenta (132A) 6/78-7/86								
1.6 Eng.132D.000 (72kW)	-4/83		R		**CF357**		Ø 22,22	
	4/83-85				**PF294**		Ø 20,64	
1.6 i.e Eng.131B1.000 (66kW)	-4/83		R		**CF357**		Ø 22,22	
	4/83-85				**PF294**		Ø 20,64	
2.0 Eng.132C2.000/ 132D1.000 (83kW)	-4/83		R		**CF357**		Ø 22,22	
	4/83-85				**PF294**		Ø 20,64	
2.0 i.e. Eng.132C3.000 (90kW)	-4/83		R		**CF357**		Ø 22,22	
	4/83-86				**PF294**		Ø 20,64	

		Spare Parts	F/R	L/R	FRITECH ref.		DIMENSIONS mm.	NOTE
2.0 Volumex Eng.132E (99kW)	-4/83		R		**CF357**		Ø 22,22	
	4/83-86				**PF294**		Ø 20,64	
2.5 D Eng.8144.61 (53kW)	-4/83		R		**CF357**		Ø 22,22	
	4/83-85				**PF294**		Ø 20,64	
2.5 TD Eng.8144.61.500.81 (66kW)	-4/83		R		**CF357**		Ø 22,22	
	4/83-85				**PF294**		Ø 20,64	
Barchetta (183) 4/95-5/05								
1.8 16v Eng.183A1.000/ 188A6.000 (96kW)	95-				**PF042**	Bdx	Ø 22,20	Supplied -Servo
Brava, Bravo (182) 10/95-10/01								
1.2 16v Eng.182B2.000 (60kW)	98-		R		**CF132**	Bdx	Ø 22,00	+ABS
	4/00-10/00		R		**CF778**	Loc	Ø 22,00	Alu, -ABS
	98-3/00		R		**CF116**	Loc	Ø 22,00	-ABS
	98-				**PF042**	Bdx	Ø 22,20	Supplied -Servo
	98-				**CZ023**		Ø 25,40	RHD
	98-00				**CZ070**		Ø 25,40	RHD
	98-				**PZ034**		Ø 19,05	
1.2 16v Eng.188A5.000 (59kW)	00-		R		**CF132**	Bdx	Ø 22,00	+ABS
	4/00-10/01		R		**CF778**	Loc	Ø 22,00	Alu, -ABS
	00-				**PF042**	Bdx	Ø 22,20	Supplied -Servo
	00-				**CZ023**		Ø 25,40	RHD
	00-				**CZ070**		Ø 25,40	LHD/RHD
	00-				**PZ034**		Ø 19,05	
1.4 Eng.182A5.000 (55kW)	95-		R		**CF132**	Bdx	Ø 22,00	+ABS
	95-		R		**CF116**	Loc	Ø 22,00	-ABS
	95-				**PF042**	Bdx	Ø 22,20	Supplied -Servo
	95-				**CZ023**		Ø 25,40	RHD
	95-01				**CZ070**		Ø 25,40	RHD
	95-				**PZ034**		Ø 19,05	
1.4 12v Eng.182A3.000 (59kW)	95-		R		**CF132**	Bdx	Ø 22,00	+ABS
	95-		R		**CF116**	Loc	Ø 22,00	-ABS
	95-				**PF042**	Bdx	Ø 22,20	Supplied -Servo
	95-				**CZ023**		Ø 25,40	RHD
	95-01				**CZ070**		Ø 25,40	RHD
	95-				**PZ034**		Ø 19,05	
1.6 16v Eng.182A4.000 (76kW)	96-01		R		**CF132**	Bdx	Ø 22,00	+ABS
	4/00-10/01		R		**CF778**	Loc	Ø 22,00	Alu, -ABS
	98-3/00		R		**CF116**	Loc	Ø 22,00	-ABS
	96-01				**PF042**	Bdx	Ø 22,20	Supplied -Servo
	96-01				**CZ023**		Ø 25,40	
	96-01				**PZ034**		Ø 19,05	
1.6 16v Eng.182A6.000 (66kW)	12/96-		R		**CF132**	Bdx	Ø 22,00	+ABS
	4/00-10/01		R		**CF778**	Loc	Ø 22,00	Alu, -ABS
	98-3/00		R		**CF116**	Loc	Ø 22,00	-ABS
	12/96-				**PF042**	Bdx	Ø 22,20	Supplied -Servo
	95-				**CZ023**		Ø 25,40	
	95-				**PZ034**		Ø 19,05	
1.6 16v Eng.182B6.000 (76kW)	00-02		R		**CF132**	Bdx	Ø 22,00	+ABS
	00-02		R		**CF778**	Loc	Ø 22,00	Alu, -ABS
	00-02				**PF042**	Bdx	Ø 22,20	Supplied -Servo
1.8 16v Eng.182A2.000 (83kW)	10/95-		R		**CF132**	Bdx	Ø 22,00	+ABS
	4/00-10/01		R		**CF778**	Loc	Ø 22,00	Alu, -ABS
	98-3/00		R		**CF116**	Loc	Ø 22,00	-ABS
	10/95-				**PF042**	Bdx	Ø 22,20	Supplied -Servo
	95-				**CZ023**		Ø 25,40	RHD
	95-01				**CZ070**		Ø 25,40	RHD
	95-				**PZ034**		Ø 19,05	
1.9 D Eng.160A7.000 (48kW)	3/96-		R		**CF132**	Bdx	Ø 22,00	+ABS
	4/00-01		R		**CF778**	Loc	Ø 22,00	Alu, -ABS
	98-3/00		R		**CF116**	Loc	Ø 22,00	-ABS
	3/96-				**PF042**	Bdx	Ø 22,20	Supplied -Servo
	95-				**CZ023**		Ø 25,40	
	95-				**PZ034**		Ø 19,05	
1.9 JTD Eng.182B9.000 (74kW)	00-01		R		**CF132**	Bdx	Ø 22,00	+ABS
	00-01		R		**CF778**	Loc	Ø 22,00	Alu, -ABS

		Spare Parts	F/R	L/R	FRITECH ref.		DIMENSIONS mm.	NOTE
1.9 JTD Eng.182B9.000 (74kW)	00-01				**PF042**	Bdx	Ø 22,20	Supplied -Servo
	00-01				**CZ023**		Ø 25,40	
	00-01				**PZ034**		Ø 19,05	
1.9 JTD 105 Eng.182B4.000 (77kW)	98-		R		**CF132**	Bdx	Ø 22,00	+ABS
	4/00-10/01		R		**CF778**	Loc	Ø 22,00	Alu, -ABS
	98-3/00		R		**CF116**	Loc	Ø 22,00	-ABS
	98-				**PF042**	Bdx	Ø 22,20	Supplied -Servo
	98-				**CZ023**		Ø 25,40	
	98-				**PZ034**		Ø 19,05	
1.9 TD 100 Eng.182A7.000 (74kW)	3/96-		R		**CF132**	Bdx	Ø 22,00	+ABS
	4/00-10/01		R		**CF778**	Loc	Ø 22,00	Alu, -ABS
	98-3/00		R		**CF116**	Loc	Ø 22,00	-ABS
	3/96-				**PF042**	Bdx	Ø 22,20	Supplied -Servo
	96-				**CZ023**		Ø 25,40	
	96-				**PZ034**		Ø 19,05	
1.9 TD 75 Eng.182A8.000 (55kW)	3/96-3/00		R		**CF132**	Bdx	Ø 22,00	+ABS
	4/00-10/01		R		**CF778**	Loc	Ø 22,00	Alu, -ABS
	98-3/00		R		**CF116**	Loc	Ø 22,00	-ABS
	3/96-				**PF042**	Bdx	Ø 22,20	Supplied -Servo
	96-				**CZ023**		Ø 25,40	
	96-				**PZ034**		Ø 19,05	
2.0 20v (Exc. Brava) Eng.182A1.000 (108kW)	95-				**PF042**	Bdx	Ø 22,20	Supplied -Servo, +ABS
2.0 HGT 20v (Exc. Brava) Eng.182B7.000 (113kW)	98-				**PF042**	Bdx	Ø 22,20	Supplied -Servo, +ABS
Bravo (198) 3/07-12/14								
1.4 16v Eng.192B2.000 (66kW)	07-				**PF543**	Bch	Ø 22,20	Alu, -ESP
1.4 16v Eng.198A7.000 (103kW)	08-				**PF847**	Bch	Ø 23,81	Alu
1.4 T. Eng.198A4.000 (88kW)	07-				**PF847**	Bch	Ø 23,81	Alu, M/T
1.4 T-Jet Eng.198A1.000 (110kW)	07-				**PF847**	Bch	Ø 23,81	Alu
1.6 MJT Eng.198A1.000 (77kW)	07-				**PF847**	Bch	Ø 23,81	Alu
1.6 MJT Eng.198A2.000 (88kW)	08-				**PF847**	Bch	Ø 23,81	Alu
1.6 MJT Eng.198A3.000/ A6.000 (66kW)	09-				**PF847**	Bch	Ø 23,81	Alu
1.6 MJT Eng.955A4.000 (85kW)	08-				**PF847**	Bch	Ø 23,81	Alu
1.9 MJT Eng.192A8.000 (88kW)	07-				**PF543**	Bch	Ø 22,20	Alu, -ESP
1.9 MJT Eng.192B4.000/ 192A1.000 (85kW)	07-6/08				**PF543**	Bch	Ø 22,20	Alu, -ESP
	8/08-				**PF847**	Bch	Ø 23,81	Alu, M/T
1.9 MJT Eng.192B5.000 (66kW)	6/08-				**PF847**	Bch	Ø 23,81	Alu, M/T
1.9 MJT 16v Eng.937A5.000 (110kW)	07-				**PF500**	Bch	Ø 23,81	Alu, +ABS, -VDC
2.0 MJT 16v Eng.198A5.000/ 844A2.000 (121kW)	09-				**PF847**	Bch	Ø 23,81	Alu, M/T
Cinquecento (170) 7/91-1/98								
0.7 Eng.170A.000 (23kW)	91-96		R		**CF004**		Ø 19,05	
	91-96				**PF034**		Ø 19,05	
0.7 i Eng.170A.046 (22kW)	94-		R		**CF004**		Ø 19,05	
	94-				**PF034**		Ø 19,05	
0.9 Eng.170A1.000 (30kW)	91-93		R		**CF004**		Ø 19,05	
	91-93				**PF034**		Ø 19,05	
0.9 i.e. Eng.170A1.046 (30kW)	91-93		R		**CF004**		Ø 19,05	
	91-93				**PF034**		Ø 19,05	
0.9 i.e. S Eng.1170A1.046 (29kW)	3/92-		R		**CF004**		Ø 19,05	
	3/92-				**PF034**		Ø 19,05	
1.1 Sporting Eng.176B2.000 (40kW)	94-		R		**CF004**		Ø 19,05	
	94-				**PF034**		Ø 19,05	
Coupe (FA/175) 11/93-8/00								
1.8 16v Eng.183A1.000 (96kW)	3/96-				**PF042**	Bdx	Ø 22,20	Supplied -Servo
	96-				**CZ023**		Ø 25,40	
	96-				**PZ034**		Ø 19,05	
2.0 16v Eng.836A3.000 (102kW)	3/94-97				**PF042**	Bdx	Ø 22,20	Supplied -Servo
	5/95-				**CZ023**		Ø 25,40	
	5/95-				**PZ034**		Ø 19,05	
2.0 16v T. Eng.175A1.000 (140kW)	3/94-97				**PF042**	Bdx	Ø 22,20	Supplied -Servo
					CZ024		Ø 25,40	
					PZ034		Ø 19,05	
2.0 20v Eng.182A1.000 (108kW)	96-				**PF042**	Bdx	Ø 22,20	Supplied -Servo

FIAT

		Spare Parts	F/R	L/R	FRITECH ref.		DIMENSIONS mm.	NOTE
2.0 20v Eng.182B3.000 (113kW)	98-				**CZ023**		Ø 25,40	
	98-				**PZ034**		Ø 19,05	
2.0 20v T. Eng.175A3.000 (162kW)					**CZ024**		Ø 25,40	
					PZ034		Ø 19,05	
Croma (154) 12/85-12/96								
1.6 Eng.154A.048 (61kW)	85-90				**PF091**		Ø 22,20	Alu
	88-90				**CZ011**		Ø 25,40	
	90-				**CZ023**		Ø 25,40	
	88-90				**PZ015**		Ø 19,05	
1.9 TD i.d. Eng.154C6.000 (66kW)	89-92				**PF091**		Ø 22,20	Alu
	89-91				**CZ011**		Ø 25,40	
	91-92				**CZ023**		Ø 25,40	
	89-92				**PZ015**		Ø 19,05	
1.9 TD i.d. Eng.154D1.000 (69kW)	92-96				**PF091**		Ø 22,20	Alu
	92-96				**CZ023**		Ø 25,40	
	92-96				**PZ015**		Ø 19,05	
2.0 16v Eng.154E1.000 (101kW)	92-96				**PF091**		Ø 22,20	Alu
	-92				**CZ011**		Ø 25,40	
	92-96				**CZ023**		Ø 25,40	
	92-96				**PZ015**		Ø 19,05	
2.0 CHT Eng.154A1.000 (66kW)	85-91				**PF091**		Ø 22,20	Alu
	88-91				**CZ011**		Ø 25,40	
	88-91				**PZ015**		Ø 19,05	
2.0 CHT Eng.154C5.000 (74kW)	91-92				**PF091**		Ø 22,20	Alu
	-91				**CZ011**		Ø 25,40	
	91-92				**CZ023**		Ø 25,40	
	-91				**PZ015**		Ø 19,05	
2.0 i.e. Eng.154C3.046/ 834B.146 (85kW)	87-96				**PF091**		Ø 22,20	Alu
	87-91				**CZ011**		Ø 25,40	
	91-96				**CZ023**		Ø 25,40	
	87-96				**PZ015**		Ø 19,05	
2.0 i.e. Eng.834B.000 (88kW)	87-92				**PF091**		Ø 22,20	Alu
	87-91				**CZ011**		Ø 25,40	
	91-92				**CZ023**		Ø 25,40	
	87-92				**PZ015**		Ø 19,05	
2.0 i.e. Eng.834B.048 (83kW)	86-90				**PF091**		Ø 22,20	Alu
	86-90				**CZ011**		Ø 25,40	
	86-90				**PZ015**		Ø 19,05	
2.0 i.e. T. Eng.154A2.000 (114kW)	85-91				**PF091**		Ø 22,20	Alu
	88-91				**CZ011**		Ø 25,40	
	91-				**CZ023**		Ø 25,40	
	88-91				**PZ015**		Ø 19,05	
2.0 i.e. T. Eng.834C.146 (111kW)	86-88				**PF091**		Ø 22,20	Alu
	88-91				**CZ011**		Ø 25,40	
	88-91				**PZ015**		Ø 19,05	
2.0 i.e. T. Eng.834C.146/ 154C4.046 (110kW)	87-96				**PF091**		Ø 22,20	Alu
	87-91				**CZ011**		Ø 25,40	
	91-96				**CZ023**		Ø 25,40	
	87-91				**PZ015**		Ø 19,05	
2.5 D Eng.8144.67 (55kW)	85-89				**PF091**		Ø 22,20	Alu
	85-89				**CZ011**		Ø 25,40	
	85-89				**PZ015**		Ø 19,05	
2.5 TD Eng.8144.91.2000 (74kW)	85-89				**PF091**		Ø 22,20	Alu
	85-89				**CZ011**		Ø 25,40	
	85-89				**PZ015**		Ø 19,05	
2.5 TD Eng.8144.97Y (85kW)	89-96				**PF091**		Ø 22,20	Alu
	89-91				**CZ011**		Ø 25,40	
	91-96				**CZ023**		Ø 25,40	
	89-91				**PZ015**		Ø 19,05	
2.5 TDE Eng.8144.97S (77kW)	91-96				**PF091**		Ø 22,20	Alu
	91-96				**CZ023**		Ø 25,40	
2.5 V6 Eng.834G.000 (119kW)	93-96				**PF091**		Ø 22,20	Alu
	93-96				**CZ023**		Ø 25,40	

		Spare Parts	F/R	L/R	FRITECH ref.		DIMENSIONS mm.	NOTE
Croma (194) 5/05-12/10								
1.8 Mpi Eng.939A4.000 (103kW)	05-10/06				**PF521**	Trw	Ø 25,40	Alu, +ABS, +ESP
	05-				**PF520**	Trw	Ø 25,40	Alu, +ABS, -ESP, LHD
1.9 MJT Eng.939A1.000 (88kW)	05-10/06				**PF521**	Trw	Ø 25,40	Alu, +ABS, +ESP
	05-				**PF520**	Trw	Ø 25,40	Alu, +ABS, -ESP, LHD
1.9 MJT Eng.939A7.000 (85kW)	05-10/06				**PF521**	Trw	Ø 25,40	Alu, +ABS, +ESP
	05-				**PF520**	Trw	Ø 25,40	Alu, +ABS, -ESP, LHD
1.9 MJT 16v Eng.939A2.000 (110kW)	05-10/06				**PF521**	Trw	Ø 25,40	Alu, +ABS, +ESP
	05-				**PF520**	Trw	Ø 25,40	Alu, +ABS, -ESP, LHD
2.2 Mpi 16v Eng.194A1.000 (108kW)	05-10/06				**PF521**	Trw	Ø 25,40	Alu, +ABS, +ESP
	05-				**PF520**	Trw	Ø 25,40	Alu, +ABS, -ESP, LHD
2.4 MJT 20v Eng.939A3.000 (147kW)	05-10/06				**PF521**	Trw	Ø 25,40	Alu, +ABS, +ESP
	05-				**PF520**	Trw	Ø 25,40	Alu, +ABS, -ESP, LHD
Doblo I (223) 3/01-4/05								
1.2 Eng.223A5.000 (48kW)	01-		R		**CF327**	Ate	Ø 20,64	
	01-1/02				**PF264**		Ø 22,20	+ABS
	01-1/02				**PF263**		Ø 22,20	-ABS
1.3 JTD Eng.188A9.000 (51kW)	04-		R		**CF327**	Ate	Ø 20,64	
	04-				**PF264**		Ø 22,20	+ABS
	04-				**PF263**		Ø 22,20	-ABS
	04-05				**PZ090**	Valeo	Ø 15,87	
1.6 16v Eng.182B6.000 (68-76kW)	01-05		R		**CF327**	Ate	Ø 20,64	
	01-1/02				**PF264**		Ø 22,20	+ABS
	01-1/02				**PF263**		Ø 22,20	-ABS
	01-05				**PZ090**	Valeo	Ø 15,87	
1.9 D Eng.223A6.000 (46kW)	01-		R		**CF327**	Ate	Ø 20,64	
	01-1/02				**PF264**		Ø 22,20	+ABS
	01-1/02				**PF263**		Ø 22,20	-ABS
	01-05				**PZ090**	Valeo	Ø 15,87	
1.9 JTD Eng.182B9.000 (74kW)	01-		R		**CF327**	Ate	Ø 20,64	
	01-1/02				**PF264**		Ø 22,20	+ABS
	01-1/02				**PF263**		Ø 22,20	-ABS
	01-05				**PZ090**	Valeo	Ø 15,87	
1.9 JTD Eng.223A7.000 (77kW)	7/03-		R		**CF327**	Ate	Ø 20,64	
	7/03-				**PF264**		Ø 22,20	+ABS
	7/03-				**PF263**		Ø 22,20	-ABS
	03-05				**PZ090**	Valeo	Ø 15,87	
Doblo II (119) 5/05-12/09								
1.3 MJT (Germany) Eng.223A9.000 (62kW)	05-		R		**CF827**	Loc	Ø 20,64	Alu
	05-				**PF847**	Bch	Ø 23,81	Alu, +ABS
	05-				**PF844**	Bch	Ø 23,81	Alu, -ABS
	05-09				**PZ090**	Valeo	Ø 15,87	
	05-09				**PZ090**	Valeo	Ø 15,87	
1.3 MJT 16v Eng.199A2.000 (55kW)	05-		R		**CF827**	Loc	Ø 20,64	Alu
	05-				**PF847**	Bch	Ø 23,81	Alu, +ABS
	05-				**PF844**	Bch	Ø 23,81	Alu, -ABS
	05-09				**PZ090**	Valeo	Ø 15,87	
1.4 Eng.350A1.000 (55kW)	05-08				**PF842**	Bch	Ø 22,20	Alu, -ABS
1.4 Eng.350A1.000 (57kW)	08-		R		**CF827**	Loc	Ø 20,64	Alu
	05-				**PF843**	Bch	Ø 22,20	Alu, +ABS
	05-08				**PF842**	Bch	Ø 22,20	Alu, -ABS
	05-09				**PZ090**	Valeo	Ø 15,87	
1.6 16v Eng.182B6.000 (76kW)	05-		R		**CF827**	Loc	Ø 20,64	Alu
	05-				**PF843**	Bch	Ø 22,20	Alu, +ABS
	05-08				**PF842**	Bch	Ø 22,20	Alu, -ABS
1.9 MJT Eng.186A9.000 (88kW)	05-		R		**CF827**	Loc	Ø 20,64	Alu
	05-				**PF847**	Bch	Ø 23,81	Alu, +ABS
	05-				**PF844**	Bch	Ø 23,81	Alu, -ABS
	05-09				**PZ090**	Valeo	Ø 15,87	
1.9 MJT Eng.223B1.000 (77kW)	05-		R		**CF827**	Loc	Ø 20,64	Alu
	05-				**PF847**	Bch	Ø 23,81	Alu, +ABS
	05-				**PF844**	Bch	Ø 23,81	Alu, -ABS
	05-09				**PZ090**	Valeo	Ø 15,87	

FIAT

		Spare Parts	F/R	L/R	FRITECH ref.		DIMENSIONS mm.	NOTE
1.9 MJT Eng.223B2.000 (74kW)	05-		R		**CF827**	Loc	Ø 20,64	Alu
	05-				**PF847**	Bch	Ø 23,81	Alu, +ABS
	05-				**PF844**	Bch	Ø 23,81	Alu, -ABS
Doblo III (152) 1/10-								
1.3 MJT Eng.263A2.000 (55kW)	13-		R		**CF865**	Loc	Ø 25,40	Alu
	13-				**PF913**	Bch	Ø 23,81	Alu, +ABS, +ESP
	13-				**PF912**	Bch	Ø 23,81	Alu, +ABS, -ESP
	13-				**PF914**	Bch	Ø 23,81	Alu, -ABS, -ESP
1.3 MJT Eng.263A2.000 (66kW)	10-		R		**CF865**	Loc	Ø 25,40	Alu
	10-				**PF913**	Bch	Ø 23,81	Alu, +ABS, +ESP, M/T
	10-				**PF912**	Bch	Ø 23,81	Alu, +ABS, -ESP, M/T
	10-				**PF914**	Bch	Ø 23,81	Alu, -ABS
1.4 Natural power Eng.198A4.000 (88kW)	10-		R		**CF865**	Loc	Ø 25,40	Alu
	10-				**PF913**	Bch	Ø 23,81	Alu, +ABS, +ESP, M/T
	10-				**PF912**	Bch	Ø 23,81	Alu, +ABS, -ESP, M/T
	10-				**PF914**	Bch	Ø 23,81	Alu, -ABS
1.4 T-Jet 16v Eng.198A4.000 (88kW)	10-		R		**CF865**	Loc	Ø 25,40	Alu
	10-				**PF913**	Bch	Ø 23,81	Alu, +ABS, +ESP, M/T
	10-				**PF912**	Bch	Ø 23,81	Alu, +ABS, -ESP, M/T
	10-				**PF914**	Bch	Ø 23,81	Alu, -ABS
1.4, 16v Eng.843A1.000 (70kW)	10-		R		**CF865**	Loc	Ø 25,40	Alu
	10-				**PF913**	Bch	Ø 23,81	Alu, +ABS, +ESP, M/T
	10-				**PF912**	Bch	Ø 23,81	Alu, +ABS, -ESP, M/T
	10-				**PF914**	Bch	Ø 23,81	Alu, -ABS
1.6 MJT Eng.198A3.000 (77kW)	10-		R		**CF865**	Loc	Ø 25,40	Alu
	10-				**PF913**	Bch	Ø 23,81	Alu, +ABS, +ESP, M/T
	10-				**PF912**	Bch	Ø 23,81	Alu, +ABS, -ESP, M/T
	10-				**PF914**	Bch	Ø 23,81	Alu, -ABS
1.6 MJT Eng.263A4.000 (66kW)	10-		R		**CF865**	Loc	Ø 25,40	Alu
	10-				**PF913**	Bch	Ø 23,81	Alu, +ABS, +ESP
	10-				**PF912**	Bch	Ø 23,81	Alu, +ABS, -ESP
2.0 MJT Eng.263A1.000 (99kW)	10-		R		**CF865**	Loc	Ø 25,40	Alu
	10-				**PF913**	Bch	Ø 23,81	Alu, +ABS, +ESP, M/T
	10-				**PF912**	Bch	Ø 23,81	Alu, +ABS, -ESP, M/T
	10-				**PF914**	Bch	Ø 23,81	Alu, -ABS
Duna (146 B), Weekend 1/87-12/91								
1.1 60 Eng.146A6.000 (43kW)	87-		R		**CF216**		Ø 19,05	
	87-				**PF023**	Ate	Ø 20,64	
	87-				**PF187**	Bdx	Ø 20,64	
	87-				**CT006**	Bdx/Ate	Ø 25,40	Alu
1.3 70 Eng.146A5.000 (49kW)	87-		R		**CF216**		Ø 19,05	
	87-				**PF023**	Ate	Ø 20,64	
	87-				**PF187**	Bdx	Ø 20,64	
	87-				**CT006**	Bdx/Ate	Ø 25,40	Alu
1.7 D Eng.149B3.000 (44kW)	87-		R		**CF216**		Ø 19,05	
	87-				**PF023**	Ate	Ø 20,64	
	87-				**PF187**	Bdx	Ø 20,64	
	87-				**CT006**	Bdx/Ate	Ø 25,40	Alu
Grande Punto IV (199) 9/05-1/12								
0.9 Twinair Eng.312A2.000 (63kW)	11-		R		**CF827**	Loc	Ø 20,64	Alu
1.2 Eng.169A4.000 (51kW)	10-		R		**CF827**	Loc	Ø 20,64	Alu
	10-				**PF699**	Bch	Ø 22,20	Vett -001185248, Alu, +VDC
	10-				**PF700**	Bch	Ø 22,20	Alu
1.2 Eng.199A4.000 (48kW)	05-		R		**CF827**	Loc	Ø 20,64	Alu
	05-				**PF699**	Bch	Ø 22,20	Vett -001185248, Alu, +ESP, +VDC, A/T
	05-				**PF700**	Bch	Ø 22,20	Vett 001185249-, Alu, -ESP
1.3 MJT 16v Eng.199A2.000 (55kW)	05-		R		**CF827**	Loc	Ø 20,64	Alu
	05-				**PF699**	Bch	Ø 22,20	Vett -001185248, Alu, +ESP, +VDC, A/T
	05-				**PF700**	Bch	Ø 22,20	Vett 001185249-, Alu, -ESP
1.3 MJT 16v Eng.199A3.000 (66kW)	05-		R		**CF827**	Loc	Ø 20,64	Alu
	05-				**PF699**	Bch	Ø 22,20	Alu, +ESP, A/T
	05-				**PF700**	Bch	Ø 22,20	Vett 001185249-, Alu, -ESP
	05-				**PF699**	Bch	Ø 22,20	Vett -001185248, Alu, +VDC

		Spare Parts	F/R	L/R	FRITECH ref.		DIMENSIONS mm.	NOTE
1.4 Eng.199A7.000 (55kW)	10-		R		**CF827**	Loc	Ø 20,64	Alu
	06-				**PF700**	Bch	Ø 22,20	Alu, M/T+A/T
1.4 Eng.350A1.000 (57kW)	05-		R		**CF827**	Loc	Ø 20,64	Alu
	05-				**PF699**	Bch	Ø 22,20	Vett -001185248, Alu, +ESP, +VDC, A/T
	05-				**PF700**	Bch	Ø 22,20	Vett 001185249-, Alu, -ESP
1.4 16v Eng.199A6.000 (70kW)	06-		R		**CF827**	Loc	Ø 20,64	Alu
	06-				**PF699**	Bch	Ø 22,20	Vett -001185248, Alu, +ESP, +VDC, A/T
	06-				**PF700**	Bch	Ø 22,20	Vett 001185249-, Alu, -ESP
1.4 16v Eng.955A6.000 (77kW)	09-		R		**CF827**	Loc	Ø 20,64	Alu
	09-				**PF700**	Bch	Ø 22,20	Alu, -ESP
1.4 LPG Eng.350A1.000 (57kW)	08-12		R		**CF827**	Loc	Ø 20,64	Alu
	09-				**PF700**	Bch	Ø 22,20	Alu, -ESP, M/T+A/T
1.4 Natural Power Eng.350A1.000 (57kW)	08-12		R		**CF827**	Loc	Ø 20,64	Alu
	09-				**PF700**	Bch	Ø 22,20	Alu, -ESP, M/T+A/T
1.4 T. Eng.199A6.000 (88kW)	07-				**PF699**	Bch	Ø 22,20	Vett -001185248, Alu, +ESP
	07-				**PF700**	Bch	Ø 22,20	Vett 001185249-, Alu, -ESP
1.6 MJT Eng.955A3.000 (88kW)	08-				**PF700**	Bch	Ø 22,20	Vett 001185249-, Alu, -ESP
	08-				**PF699**	Bch	Ø 22,20	Vett -001185248, Alu, +VDC
1.9 MJT Eng.199A5.000 (96kW)	05-				**PF699**	Bch	Ø 22,20	Vett -001185248, Alu, +ESP, +VDC, A/T
	05-				**PF700**	Bch	Ø 22,20	Vett 001185249-, Alu, -ESP
1.9 MJT Eng.939A1.000 (88kW)	05-				**PF699**	Bch	Ø 22,20	Vett -001185248, Alu, +ESP, +VDC, A/T
	05-				**PF700**	Bch	Ø 22,20	Vett 001185249-, Alu, -ESP
1.9 MJT Eng.939A7.000 (85kW)	06-				**PF699**	Bch	Ø 22,20	Vett -001185248, Alu, +ESP, +VDC, A/T
	06-				**PF700**	Bch	Ø 22,20	Vett 001185249-, Alu, -ESP
Idea (135) 1/04-12/12								
1.2 16v Eng.188A5.000 (59kW)	1/04-6/05		R		**CF778**	Loc	Ø 22,00	Alu
	7/05-		R		**CF829**	Loc	Ø 22,00	Alu
	1/07-				**PF845**	Bch	Ø 23,81	Alu, +ABS, +ESP
	04-12/06				**PF482**	Bch	Ø 23,81	Alu, +ABS, +VDC
	04-12/06				**PF500**	Bch	Ø 23,81	Alu, +ABS, -VDC
	04-				**PZ071**	Ap	Ø 15,87	
1.3 MJT Eng.188A9.000 (51kW)	04-6/05		R		**CF778**	Loc	Ø 22,00	Alu
	7/05-		R		**CF829**	Loc	Ø 22,00	Alu
	1/07-				**PF845**	Bch	Ø 23,81	Alu, +ABS, +ESP
	04-12/06				**PF482**	Bch	Ø 23,81	Alu, +ABS, +VDC
	04-12/06				**PF500**	Bch	Ø 23,81	Alu, +ABS, -VDC
	04-				**PZ071**	Ap	Ø 15,87	
1.3 MJT 16v Eng.199A3.000 (66kW)	05-		R		**CF827**	Loc	Ø 20,64	Alu
	1/07-				**PF845**	Bch	Ø 23,81	Alu, +ABS, +ESP
	04-12/06				**PF482**	Bch	Ø 23,81	Alu, +ABS, +VDC
	05-12/06				**PF500**	Bch	Ø 23,81	Alu, +ABS, -VDC
	05-				**PZ072**	Valeo	Ø 15,87	
1.3 MJTD 16v Eng.199B1.000 (70kW)	09-		R		**CF827**	Loc	Ø 20,64	Alu
	09-				**PF845**	Bch	Ø 23,81	Alu, +ABS, +ESP
1.4 Eng.350A1.000 (57kW)	05-		R		**CF829**	Loc	Ø 22,00	Alu
	09-		R		**CF829**	Loc	Ø 22,00	Alu
	09-				**PF845**	Bch	Ø 23,81	Alu, +ABS, +ESP
	1/07-				**PF845**	Bch	Ø 23,81	Alu, +ABS, +ESP
	04-12/06				**PF482**	Bch	Ø 23,81	Alu, +ABS, +VDC
	05-12/06				**PF500**	Bch	Ø 23,81	Alu, +ABS, -VDC
	05-				**PZ071**	Ap	Ø 15,87	
1.4 16v Eng.192B2.000 (66kW)	04-6/05		R		**CF778**	Loc	Ø 22,00	Alu
	7/05-		R		**CF829**	Loc	Ø 22,00	Alu
	04-12/06				**PF482**	Bch	Ø 23,81	Alu, +ABS, +VDC
	04-12/06				**PF500**	Bch	Ø 23,81	Alu, +ABS, -VDC
	04-				**PZ071**	Ap	Ø 15,87	
1.4 16v Eng.843A1.000 (70kW)	04-6/05		R		**CF778**	Loc	Ø 22,00	Alu
	7/05-		R		**CF829**	Loc	Ø 22,00	Alu
	1/07-				**PF845**	Bch	Ø 23,81	Alu, +ABS, +ESP
	04-12/06				**PF482**	Bch	Ø 23,81	Alu, +ABS, +VDC
	04-12/06				**PF500**	Bch	Ø 23,81	Alu, +ABS, -VDC
	04-				**PZ071**	Ap	Ø 15,87	
1.6 MJT 16v Eng.350A2.000 (88kW)	9/08-				**PF845**	Bch	Ø 23,81	Alu, +ABS, +ESP

		Spare Parts	F/R	L/R	FRITECH ref.		DIMENSIONS mm.	NOTE
1.9 JTD Eng.188B2.000 (74kW)	04-7/05		R		**CF090**	Loc	Ø 20,64	
	7/05-		R		**CF827**	Loc	Ø 20,64	Alu
	1/07-				**PF845**	Bch	Ø 23,81	Alu, +ABS, +ESP
	04-12/06				**PF482**	Bch	Ø 23,81	Alu, +ABS, +VDC
	04-12/06				**PF500**	Bch	Ø 23,81	Alu, +ABS, -VDC
	04-				**PZ072**	Valeo	Ø 15,87	
Linea (323) 6/07-12/14								
1.3 MJT Eng.199A3.000 (66kW)	07-		R		**CF827**	Loc	Ø 20,64	Alu
	07-				**PF937**	Bch	Ø 22,20	Alu, -ABS
	07-5/08				**PF700**	Bch	Ø 22,20	Alu, -ESP
1.3 MJT Eng.199B1.000 (70kW)	09-				**PF937**	Bch	Ø 22,20	Alu, -ABS
1.4 Eng.350A1.000 (57kW)	07-		R		**CF827**	Loc	Ø 20,64	Alu
	07-				**PF937**	Bch	Ø 22,20	Alu, -ABS
	07-5/08				**PF700**	Bch	Ø 22,20	Alu, -ESP
1.4 T-Jet Eng.198A4.000 (88kW)	07-				**PF937**	Bch	Ø 22,20	Alu, -ABS
	07-5/08				**PF700**	Bch	Ø 22,20	Alu, -ESP
1.6 MJTD Eng.198A3.000 (77kW)	09-				**PF937**	Bch	Ø 22,20	Alu, -ABS
Marea (185) 9/96-12/07								
1.2 16v Eng.182B2.000 (60kW)	98-		R		**CF778**	Loc	Ø 22,00	Alu
	98-				**PF042**	Bdx	Ø 22,20	Supplied -Servo
1.4 12v Eng.182A3.000 (59kW)	96-3/99		R		**CF132**	Bdx	Ø 22,00	
	4/99-		R		**CF116**	Loc	Ø 22,00	
	96-				**PF042**	Bdx	Ø 22,20	Supplied -Servo
	96-2/99				**CZ023**		Ø 25,40	RHD
	3/99-				**PZ034**		Ø 19,05	
1.6 16v Eng.182A4.000 (76kW)	9/96-3/99		R		**CF132**	Bdx	Ø 22,00	
	4/00-		R		**CF778**	Loc	Ø 22,00	Alu
	4/99-		R		**CF116**	Loc	Ø 22,00	
	9/96-				**PF042**	Bdx	Ø 22,20	Supplied -Servo
	96-2/99				**CZ023**		Ø 25,40	RHD
	3/99-				**PZ034**		Ø 19,05	
1.6 16v Bipower Eng.186A4.000/ 185A3.000	-3/99		R		**CF132**	Bdx	Ø 22,00	
(76kW)	4/00-		R		**CF778**	Loc	Ø 22,00	Alu
	4/99-		R		**CF116**	Loc	Ø 22,00	
	99-				**PF042**	Bdx	Ø 22,20	Supplied -Servo
	-3/99				**CZ023**		Ø 25,40	RHD
	3/99-				**PZ034**		Ø 19,05	
1.8 16v Eng.182A2.000 (83kW)	9/96-3/99		R		**CF132**	Bdx	Ø 22,00	
	4/00-		R		**CF778**	Loc	Ø 22,00	Alu
	4/99-		R		**CF116**	Loc	Ø 22,00	
	9/96-				**PF042**	Bdx	Ø 22,20	Supplied -Servo
	96-2/99				**CZ023**		Ø 25,40	RHD
	3/99-				**PZ034**		Ø 19,05	
1.9 JTD 105 Eng.182B4.000 (77kW)	-3/99		R		**CF132**	Bdx	Ø 22,00	
	4/00-		R		**CF778**	Loc	Ø 22,00	Alu
	4/99-		R		**CF116**	Loc	Ø 22,00	
	99-				**PF042**	Bdx	Ø 22,20	Supplied -Servo
	-2/99				**CZ023**		Ø 25,40	RHD
	3/99-01				**PZ034**		Ø 19,05	
1.9 JTD 110 Eng.186A6.000 (81kW)	01-		R		**CF778**	Loc	Ø 22,00	Alu
	01-				**PF042**	Bdx	Ø 22,20	Supplied -Servo
	01-03				**PZ034**		Ø 19,05	
1.9 TD 100 Eng.182A7.000 (74kW)	9/96-3/99		R		**CF132**	Bdx	Ø 22,00	
	4/99-		R		**CF116**	Loc	Ø 22,00	
	9/96-				**PF042**	Bdx	Ø 22,20	Supplied -Servo
	96-2/99				**CZ023**		Ø 25,40	RHD
	3/99-				**PZ034**		Ø 19,05	
1.9 TD 75 Eng.182A8.000 (55kW)	9/96-3/99		R		**CF132**	Bdx	Ø 22,00	
	4/00-		R		**CF778**	Loc	Ø 22,00	Alu
	4/99-		R		**CF116**	Loc	Ø 22,00	
	9/96-				**PF042**	Bdx	Ø 22,20	Supplied -Servo
	96-2/99				**CZ023**		Ø 25,40	RHD
	3/99-				**PZ034**		Ø 19,05	

		Spare Parts	F/R	L/R	FRITECH ref.		DIMENSIONS mm.	NOTE
2.0 150 20v Eng.185A8.000 (110kW)	01-				**PF042**	Bdx	Ø 22,20	Supplied -Servo
	01-				**CZ024**		Ø 25,40	
	01-				**PZ034**		Ø 19,05	
2.0 155 20v Eng.182B7.000 (113kW)	99-				**PF042**	Bdx	Ø 22,20	Supplied -Servo
	-2/99				**CZ023**		Ø 25,40	RHD
	3/99-				**CZ024**		Ø 25,40	
	3/99-				**PZ034**		Ø 19,05	
2.0 20v Eng.182A1.000 (108kW)	96-				**PF042**	Bdx	Ø 22,20	Supplied -Servo
	3/99-				**CZ024**		Ø 25,40	
	96-2/99				**CZ023**		Ø 25,40	RHD
	3/99-				**PZ034**		Ø 19,05	
2.4 JTD 130 Eng.839A5.000 (96kW)	99-				**PF042**	Bdx	Ø 22,20	Supplied -Servo
	-2/99				**CZ023**		Ø 25,40	RHD
	99-				**CZ024**		Ø 25,40	LHD
	99-				**PZ034**		Ø 19,05	LHD
	99-				**PZ067**		Ø 19,05	
2.4 TD 125 Eng.185A2.000 (91kW)	9/96-				**PF042**	Bdx	Ø 22,20	Supplied -Servo
	7/96-				**CZ024**		Ø 25,40	LHD
	96-2/99				**CZ023**		Ø 25,40	RHD
	7/96-99				**PZ034**		Ø 19,05	LHD
Marea (185) Weekend 9/96-12/07								
1.2 16v Eng.182B2.000 (60kW)	98-		R		**CF778**	Loc	Ø 22,00	Alu
	98-				**PF042**	Bdx	Ø 22,20	Supplied -Servo
1.4 12v Eng.182A3.000 (59kW)	3/99-				**PZ034**		Ø 19,05	
1.6 16v Eng.182A4.000 (76kW)	9/96-		R		**CF135**	Bdx	Ø 20,64	
	4/00-		R		**CF778**	Loc	Ø 22,00	Alu
	9/96-				**PF042**	Bdx	Ø 22,20	Supplied -Servo
	3/99-				**PZ034**		Ø 19,05	
1.8 16v Eng.182A2.000 (83kW)	9/96-		R		**CF135**	Bdx	Ø 20,64	
	4/00-		R		**CF778**	Loc	Ø 22,00	Alu
	9/96-				**PF042**	Bdx	Ø 22,20	Supplied -Servo
	3/99-				**PZ034**		Ø 19,05	
1.9 JTD 105 Eng.182B4.000 (77kW)	99-		R		**CF135**	Bdx	Ø 20,64	
	99-				**PF042**	Bdx	Ø 22,20	Supplied -Servo
1.9 JTD 110 Eng.186A6.000 (81kW)	01-		R		**CF778**	Loc	Ø 22,00	Alu
	01-				**PF042**	Bdx	Ø 22,20	Supplied -Servo
	01-03				**PZ034**		Ø 19,05	
	03-				**PZ067**		Ø 19,05	
1.9 TD 100 Eng.182A7.000 (74kW)	9/96-		R		**CF135**	Bdx	Ø 20,64	
	9/96-				**PF042**	Bdx	Ø 22,20	Supplied -Servo
1.9 TD 75 Eng.182A8.000 (55kW)	9/96-		R		**CF135**	Bdx	Ø 20,64	
	4/00-		R		**CF778**	Loc	Ø 22,00	Alu
	9/96-				**PF042**	Bdx	Ø 22,20	Supplied -Servo
2.0 150 20v Eng.185A8.000 (110kW)	01-03				**PZ032**		Ø 19,05	
2.4 JTD 130 Eng.839A5.000 (96kW)	03-				**PZ067**		Ø 19,05	
	3/99-03				**PZ034**		Ø 19,05	
2.4 TD 125 Eng.185A2.000 (91kW)	96-99				**PZ034**		Ø 19,05	
Multipla (186) 4/99-6/10								
1.6 16v Eng.182A4.000 (76kW)	4/99-02		R		**CF135**	Bdx	Ø 20,64	
	02-				**PF795**	Bch	Ø 20,64	Supplied -Servo, +ABS, LHD
	99-02				**PF630**	Bch	Ø 20,64	Alu, Supplied -Servo, +ABS, +VDC
	4/99-02				**PF042**	Bdx	Ø 22,20	Supplied -Servo
	99-10				**PF339**		Ø 20,64	Ch -2158353, -ABS
1.6 16v Bipower Eng.182B6.000 (76kW)	01-02		R		**CF135**	Bdx	Ø 20,64	
	01-02				**PF630**	Bch	Ø 20,64	Alu, Supplied -Servo, +ABS, +VDC
	02-				**PF795**	Bch	Ø 20,64	Supplied -Servo, +ABS, LHD
	01-				**PF042**	Bdx	Ø 22,20	Supplied -Servo
	01-10				**PF339**		Ø 20,64	Ch -2158353, -ABS
1.6 16v Bipower Eng.186A4.000 (76kW)	4/99-02		R		**CF135**	Bdx	Ø 20,64	
	02-				**PF795**	Bch	Ø 20,64	Supplied -Servo, +ABS, LHD
	99-02				**PF630**	Bch	Ø 20,64	Alu, Supplied -Servo, +ABS, +VDC
	4/99-				**PF042**	Bdx	Ø 22,20	Supplied -Servo
	99-10				**PF339**		Ø 20,64	Ch -2158353, -ABS

FIAT

		Spare Parts	F/R	L/R	FRITECH ref.		DIMENSIONS mm.	NOTE
1.6 16v Blupower Eng.182B6.000 (70-74kW)	02-		R		**CF135**	Bdx	Ø 20,64	
	02-				**PF630**	Bch	Ø 20,64	Alu, Supplied -Servo, +ABS, +ESP, +VDC
	02-				**PF795**	Bch	Ø 20,64	Supplied -Servo, +ABS, -ESP, LHD
	02-				**PF042**	Bdx	Ø 22,20	Supplied -Servo, -ABS, -ESP
1.6 16v Blupower Eng.186A3.000 (70kW)	4/99-02		R		**CF135**	Bdx	Ø 20,64	
	02-				**PF795**	Bch	Ø 20,64	Supplied -Servo, +ABS, LHD
	4/99-02				**PF042**	Bdx	Ø 22,20	Supplied -Servo
	99-10				**PF339**		Ø 20,64	Ch -2158353, -ABS
1.9 JTD 105 Eng.182B4.000 (77kW)	4/99-02		R		**CF135**	Bdx	Ø 20,64	
	02-				**PF795**	Bch	Ø 20,64	Supplied -Servo, +ABS, LHD
	4/99-02				**PF042**	Bdx	Ø 22,20	Supplied -Servo
	99-10				**PF339**		Ø 20,64	Ch -2158353, -ABS
1.9 JTD 110 Eng.186A6.000 (81kW)	01-02		R		**CF135**	Bdx	Ø 20,64	
	01-02				**PF042**	Bdx	Ø 22,20	Supplied -Servo
	01-02				**PF339**		Ø 20,64	Ch -2158353, -ABS
1.9 JTD 115 Eng.186A8.000 (85kW)	02-		R		**CF135**	Bdx	Ø 20,64	
	02-				**PF840**	Bch	Ø 22,20	Vett 2178714-, Alu, +ABS, +ESP
	02-				**PF839**	Bch	Ø 22,20	Vett 2178714-, Alu, +ABS, -ESP
	02-				**PF042**	Bdx	Ø 22,20	Supplied -Servo
	02-10				**PF339**		Ø 20,64	Ch -2158353, -ABS
1.9 MJT Eng.186A9.000 (88kW)	04-		R		**CF135**	Bdx	Ø 20,64	
	04-				**PF630**	Bch	Ø 20,64	Vett -2178713, Alu, Supplied -Servo, +ABS, +ESP, +VDC
	04-				**PF840**	Bch	Ø 22,20	Vett 2178714-, Alu, +ABS, +ESP
	04-				**PF839**	Bch	Ø 22,20	Vett 2178714-, Alu, +ABS, -ESP
	04-				**PF042**	Bdx	Ø 22,20	Vett -2158353, Supplied -Servo, -VDC
Palio Weekend (178DX) 4/96-								
1.2 Eng.178B5.000 (54kW)	96-01		R		**CF141**	Bdx	Ø 20,64	
	96-		R		**CF135**	Loc	Ø 20,64	
	01-				**PF229**	Ate	Ø 20,64	+ABS
	01-				**PF190**	Ate	Ø 20,64	-ABS
1.2 Eng.188A4.000 (44kW)	01-		R		**CF141**	Bdx	Ø 20,64	
	01-		R		**CF135**	Loc	Ø 20,64	
	01-				**PF229**	Ate	Ø 20,64	+ABS
	01-				**PF190**	Ate	Ø 20,64	-ABS
	01-04				**PF186**	Bch	Ø 22,20	
1.2 16v Eng.188A5.000 (59kW)	01-		R		**CF141**	Bdx	Ø 20,64	
	01-		R		**CF135**	Loc	Ø 20,64	
	01-				**PF233**	Ate	Ø 22,20	+ABS
1.6 Eng.178C7.098/ 178D2.011 (68-70kW)	97-03		R		**CF141**	Bdx	Ø 20,64	
1.6 16v Eng.178B3.000 (74kW)	06-01		R		**CF141**	Bdx	Ø 20,64	
	96-		R		**CF135**	Loc	Ø 20,64	
	96-				**PF233**	Ate	Ø 22,20	+ABS
	96-				**PF232**	Ate	Ø 22,20	-ABS
1.6 16v Eng.178B3000 (74kW)	03-05		R		**CF141**	Bdx	Ø 20,64	
	03-05		R		**CF135**	Loc	Ø 20,64	
1.6 16v Eng.182B6.000 (76kW)	01-		R		**CF141**	Bdx	Ø 20,64	
	01-		R		**CF135**	Loc	Ø 20,64	
	01-				**PF233**	Ate	Ø 22,20	+ABS
	01-				**PF232**	Ate	Ø 22,20	-ABS
	01-				**PF186**	Bch	Ø 22,20	
1.7 TD Eng.176A3.000 (51kW)	96-		R		**CF135**	Loc	Ø 20,64	
	96-				**PF233**	Ate	Ø 22,20	+ABS
	96-				**PF190**	Ate	Ø 20,64	-ABS
1.7 TD Eng.176A5.000 (53-59kW)	97-		R		**CF135**	Loc	Ø 20,64	
1.9 D Eng.223A6.000 (46kW)	01-		R		**CF141**	Bdx	Ø 20,64	
	01-		R		**CF135**	Loc	Ø 20,64	
	01-				**PF233**	Ate	Ø 22,20	+ABS
	01-				**PF190**	Ate	Ø 20,64	-ABS
	01-				**PF186**	Bch	Ø 22,20	
1.9 JTD Eng.188A2.000 (59kW)	01-		R		**CF141**	Bdx	Ø 20,64	
	01-		R		**CF135**	Loc	Ø 20,64	
	8/03-				**PF233**	Ate	Ø 22,20	+ABS
	01-7/03				**PF232**	Ate	Ø 22,20	

		Spare Parts	F/R	L/R	FRITECH ref.		DIMENSIONS mm.	NOTE
1.9 JTD Eng.188A2.000 (59kW)	01-				**PF186**	Bch	Ø 22,20	
1.9 JTD Eng.188A2.000 (74kW)	02-		R		**CF135**	Loc	Ø 20,64	
	02-				**PF233**	Ate	Ø 22,20	+ABS
	02-7/03				**PF232**	Ate	Ø 22,20	
	02-				**PF186**	Bch	Ø 22,20	
Palio/Siena I (178BX) 4/96-10/11								
1.0 Eng.178A1.000/ 310A1.011 (45-56kW)	96-		R		**CF583**	Ate	Ø 19,05	Alu, Tunisia
	4/96-				**PF190**	Ate	Ø 20,64	Tunisia
1.0 Flex Eng.310A1.011 (54kW)	09-		R		**CF135**		Ø 20,64	China
1.2 Eng.178C4.066/ 188A4.000 (45kW)	97-04		R		**CF583**	Ate	Ø 19,05	Alu
	02-04		R		**CF135**	Bdx	Ø 20,64	
1.2 Eng.178E2.000 (50kW)	99-00		R		**CF583**	Ate	Ø 19,05	Alu
1.2 16v Eng.178B5.000 (54kW)	9/98-		R		**CF583**	Ate	Ø 19,05	Alu
	9/98-		R		**CF135**	Bdx	Ø 20,64	
	6/98-8/98		R		**CF315**		Ø 19,05	
	6/98-				**PF190**	Ate	Ø 20,64	
	05-				**PF186**	Bch	Ø 22,20	
1.4 Eng.178B2.000 (51kW)	96-		R		**CF583**	Ate	Ø 19,05	Alu
	9/98-		R		**CF135**	Bdx	Ø 20,64	
	9/98-				**PF190**	Ate	Ø 20,64	
	05-				**PF186**	Bch	Ø 22,20	
1.4 Flex Eng.178F3.011 (59-60kW)	07-		R		**CF135**		Ø 20,64	China
1.4 Flex Eng.310A2.011 (63kW)	07-		R		**CF135**		Ø 20,64	China
1.4 Kat Eng.178B2.016 (51kW)	96-		R		**CF583**	Ate	Ø 19,05	Alu
	9/98-		R		**CF135**	Bdx	Ø 20,64	
	9/98-				**PF190**	Ate	Ø 20,64	
	05-				**PF186**	Bch	Ø 22,20	
1.6 16v Eng.178B3.000 (74-78kW)	96-		R		**CF583**	Ate	Ø 19,05	Alu
	9/98-		R		**CF135**	Bdx	Ø 20,64	
	96-8/98		R		**CF315**		Ø 19,05	
	9/98-				**PF190**	Ate	Ø 20,64	
	96-8/98				**PF229**	Ate	Ø 20,64	
	05-				**PF186**	Bch	Ø 22,20	
1.7 TD Eng.176A5.000 (51kW)	96-		R		**CF583**	Ate	Ø 19,05	Alu
	9/98-				**PF190**	Ate	Ø 20,64	
	05-				**PF186**	Bch	Ø 22,20	
1.8 Flex (82kW)	06-10		R		**CF135**		Ø 20,64	China
1.8 Flex (85kW)	05-10		R		**CF135**		Ø 20,64	China
Panda I (141A) 10/80-7/04								
0.65 Eng.141A.000 (22kW)	-8/82		R		**CF351**		Ø 15,72	
	9/82-7/84		R		**CF070**		Ø 15,72	
	8/84-91		R		**CF004**		Ø 19,05	
	3/82-				**PF051**		Ø 19,05	Vett -6108134
	-8/82				**PF052**		Ø 19,05	Vett 6108135-
	8/84-91				**PF018**		Ø 19,05	
	9/82-7/84				**PF053**		Ø 19,05	
	3/82-8/82				**CT005**		Ø 19,05	Alu
	9/82-7/84				**CT008**		Ø 19,05	Alu
0.75 Fire Eng.156A4.000 (25kW)	86-95		R		**CF004**		Ø 19,05	
	86-95				**PF018**		Ø 19,05	
	86-95				**CT008**		Ø 19,05	Alu
0.75, Kat Eng.141B.000 (25kW)	86-95		R		**CF004**		Ø 19,05	
	86-95				**PF018**		Ø 19,05	
	86-95				**CT008**		Ø 19,05	Alu
0.8 Eng.100GL6.000 (25kW)	81-8/82		R		**CF351**		Ø 15,72	
	9/82-7/84		R		**CF070**		Ø 15,72	
	8/84-85		R		**CF004**		Ø 19,05	
	81-				**PF051**		Ø 19,05	Vett -6108134
	-8/82				**PF052**		Ø 19,05	Vett 6108135-
	8/84-85				**PF018**		Ø 19,05	
	81-7/84				**PF053**		Ø 19,05	
	81-8/82				**CT005**		Ø 19,05	Alu
	81-85				**CT008**		Ø 19,05	Alu

FIAT

		Spare Parts	F/R	L/R	FRITECH ref.		DIMENSIONS mm.	NOTE
0.9 Eng.100GL3.000/ 146A.000 (33kW)	3/80-8/82		R		**CF351**		Ø 15,72	
	9/82-7/84		R		**CF070**		Ø 15,72	
	8/84-91		R		**CF004**		Ø 19,05	
	3/80-				**PF051**		Ø 19,05	Vett -6108134
	-8/82				**PF052**		Ø 19,05	Vett 6108135-
	8/84-91				**PF018**		Ø 19,05	
	9/82-7/84				**PF053**		Ø 19,05	
	3/80-8/82				**CT005**		Ø 19,05	Alu
	9/82-91				**CT008**		Ø 19,05	Alu
0.9 Eng.1170A1.046 (29kW)	92-		R		**CF004**	Loc	Ø 19,05	
	92-				**PF009**	Loc	Ø 20,64	
0.95, 4WD Eng.A112B1.054 (35kW)	82-		R		**CF004**		Ø 19,05	Ch -5296653
	82-				**PF053**		Ø 19,05	Ch -5242876
					PF017		Ø 19,05	Ch 5242877-5290300
					PF018		Ø 19,05	Ch 5290301-5296653
	82-				**CT008**		Ø 19,05	Ch -5296653, Alu
1.0 4WD Eng.156A2.100/ 156A3.100 (32kW)	86-92		R		**CF004**		Ø 19,05	
	86-92				**PF018**		Ø 19,05	
	86-92				**CT008**		Ø 19,05	Alu
1.0 i.e. Kat, 4WD Eng.141C2.000/ 156A2.246 (33kW)	87-92		R		**CF004**		Ø 19,05	
	87-92				**PF018**		Ø 19,05	
	87-92				**CT008**		Ø 19,05	Alu
1.0, 4WD Eng.156A3.000 (37kW)	86-92		R		**CF004**		Ø 19,05	
	86-92				**PF009**	Loc	Ø 20,64	
	86-92				**CT008**		Ø 19,05	Alu
1.1, 4WD Eng.156C.046 (37kW)	91-		R		**CF004**	Loc	Ø 19,05	
	91-				**PF009**	Loc	Ø 20,64	
1.1, 4WD Eng.176B2.000/ 187A1.000 (40kW)	2/95-		R		**CF004**		Ø 19,05	
	2/95-				**PF009**	Loc	Ø 20,64	
1.3 D Eng.156A5.000 (27kW)	86-92		R		**CF004**		Ø 19,05	
	86-92				**PF009**	Loc	Ø 20,64	
	86-92				**CT008**		Ø 19,05	Alu
Panda II (169) 9/03-1/12								
1.1 Eng.187A1.000 (40kW)	03-4/10		R		**CF067**	Bdx	Ø 20,64	+ABS, +VDC
	5/10-		R		**CF866**	Loc	Ø 20,64	Alu, +ABS, +ESP
	03-		R		**CF090**	Loc	Ø 20,64	-ABS
	03-				**PF546**	Bch	Ø 20,64	+ABS, -VDC
	03-				**PF545**	Bch	Ø 20,64	Alu, +ABS, +VDC
	03-				**PF544**	Bch	Ø 20,64	-ABS
1.2 Eng.188A4.000 (44kW)	03-4/10		R		**CF067**	Bdx	Ø 20,64	+ABS, +VDC
	5/10-		R		**CF866**	Loc	Ø 20,64	Alu, +ABS, +ESP
	03-		R		**CF090**	Loc	Ø 20,64	-ABS
	03-				**PF546**	Bch	Ø 20,64	+ABS, -VDC
	03-				**PF545**	Bch	Ø 20,64	Alu, +ABS, +VDC
	03-				**PF544**	Bch	Ø 20,64	-ABS
	03-				**PF846**	Trw	Ø 20,64	Alu, +ABS
1.2 4WD Eng.188A4.000 (44kW)	04-4/10		R		**CF067**	Bdx	Ø 20,64	+ABS, +VDC
	5/10-		R		**CF866**	Loc	Ø 20,64	Alu, +ABS, +ESP
	04-		R		**CF090**	Loc	Ø 20,64	-ABS
	03-				**PF539**	Bch	Ø 20,64	Alu, +Differential lock, +ABS, -ESP
	04-				**PF546**	Bch	Ø 20,64	+ABS, -VDC
	04-				**PF545**	Bch	Ø 20,64	Alu, +ABS, +VDC
	04-				**PF544**	Bch	Ø 20,64	-ABS
	04-				**PF704**	Trw	Ø 22,20	Alu, +ABS
1.2 Bi-Power Eng.188A4.000 (44kW)	07-12		R		**CF827**	Loc	Ø 20,64	Alu
	07-				**PF846**	Trw	Ø 20,64	Alu
1.2 LPG Eng.169A4.000 (51kW)	10-12		R		**CF827**	Loc	Ø 20,64	Alu
	10-				**PF846**	Trw	Ø 20,64	Alu
1.2 Natural power Eng.188A4000CNG (38kW)	09-		R		**CF827**	Loc	Ø 20,64	Alu
	09-				**PF544**	Bch	Ø 20,64	-ABS
	09-				**PF846**	Trw	Ø 20,64	Alu, +ABS
1.2, 4WD Eng.169A4.000 (51kW)	5/10-		R		**CF866**	Loc	Ø 20,64	Alu, +ABS, +ESP
	09-				**PF846**	Trw	Ø 20,64	Alu

		Spare Parts	F/R	L/R	FRITECH ref.		DIMENSIONS mm.	NOTE
1.3 MJT Eng.188A8.000 (55kW)	6/06-4/10		R		**CF067**	Bdx	Ø 20,64	+ABS
	6/06-		R		**CF866**	Loc	Ø 20,64	Alu, +ABS, +ESP
	6/06-		R		**CF090**	Loc	Ø 20,64	-ABS
	6/06-				**PF546**	Bch	Ø 20,64	+ABS, -VDC
	6/06-				**PF545**	Bch	Ø 20,64	Alu, +ABS, +VDC
	6/06-				**PF544**	Bch	Ø 20,64	-ABS
	6/06-				**PF846**	Trw	Ø 20,64	Alu, +ABS
1.3 MJT Eng.188A9.000 (51kW)	03-4/10		R		**CF067**	Bdx	Ø 20,64	+ABS
	5/10-		R		**CF866**	Loc	Ø 20,64	Alu, +ABS, +ESP
	9/03-		R		**CF090**	Loc	Ø 20,64	-ABS
	03-				**PF546**	Bch	Ø 20,64	+ABS, -VDC
	03-				**PF545**	Bch	Ø 20,64	Alu, +ABS, +VDC
	03-				**PF544**	Bch	Ø 20,64	-ABS
	03-				**PF846**	Trw	Ø 20,64	Alu, +ABS
1.3 MJT 4WD Eng.188A8.000 (55kW)	10-		R		**CF090**	Bch	Ø 20,64	-ABS
	10-		R		**CF067**	Bdx	Ø 20,64	+ABS
	5/10-		R		**CF866**	Loc	Ø 20,64	Alu, +ABS, +ESP
	10-				**PF704**	Trw	Ø 22,20	Alu
1.3 MJT 4WD Eng.188A9.000 (51kW)	04-4/10		R		**CF067**	Bdx	Ø 20,64	+ABS
	04-		R		**CF866**	Loc	Ø 20,64	Alu, +ABS, +ESP
	04-		R		**CF090**	Loc	Ø 20,64	-ABS
	04-				**PF546**	Bch	Ø 20,64	+ABS, -VDC
	04-				**PF545**	Bch	Ø 20,64	Alu, +ABS, +VDC
	04-				**PF544**	Bch	Ø 20,64	-ABS
	04-				**PF704**	Trw	Ø 22,20	Alu, +ABS
1.4 16v Eng.169A3.000 (74kW)	06-				**PF540**	Bch	Ø 22,20	Alu, +ABS, -VDC
	06-				**PF542**	Bch	Ø 22,20	Alu, +ABS, +VDC
	06-				**PF704**	Trw	Ø 22,20	Alu, +ABS
1.4 8v Natural Power Eng.350A1.000 (51kW)	5/10-		R		**CF866**	Loc	Ø 20,64	Alu, +ABS, +ESP
	10-12		R		**CF827**	Loc	Ø 20,64	Alu
1.4 Bi-power, Natural power Eng.350A1.000 (57kW)	5/10-		R		**CF866**	Loc	Ø 20,64	Alu, +ABS, +ESP
	10-		R		**CF827**	Loc	Ø 20,64	Alu
	10-				**PF544**	Bch	Ø 20,64	-ABS
Panda III (312, 519, 319) 2/12-								
0.9 Eng.312A4.000 (48kW)	12-		R		**CF827**	Loc	Ø 20,64	Alu
0.9 Natural Power Eng.312A2.000 (63kW)	12-		R		**CF827**	Loc	Ø 20,64	Alu
0.9 Twinair, 4WD Eng.312A2.000 (63kW)	12-		R		**CF827**	Loc	Ø 20,64	Alu
1.2 Eng.169A4.000 (51kW)	12-		R		**CF827**	Loc	Ø 20,64	Alu
1.2 Easypower Eng.169A4.000 (51kW)	12-		R		**CF827**	Loc	Ø 20,64	Alu
1.3 MJT Eng.169A1.000 (55kW)	12-		R		**CF827**	Loc	Ø 20,64	Alu
1.3 MJT 4WD Eng.199A9.000 (55kW)	12-				**PF704**	Trw	Ø 22,20	Alu
Punto Evo (199) 10/09-12/12								
1.2 Eng.169A4.000 (51kW)	09-				**PF700**	Bch	Ø 22,20	Alu
1.2 Eng.199A4.000 (48kW)	09-		R		**CF827**	Loc	Ø 20,64	Alu
	09-				**PF700**	Bch	Ø 22,20	Alu, -ESP
1.3 MJT Eng.199A2.000/ 199A9.000 (55kW)	09-		R		**CF827**	Loc	Ø 20,64	Alu
	09-				**PF700**	Bch	Ø 22,20	Alu, -ESP
1.3 MJT Eng.199A3.000 (66kW)	09-		R		**CF827**	Loc	Ø 20,64	Alu
	09-				**PF700**	Bch	Ø 22,20	Alu, M/T
1.3 MJT Eng.199B1.000 (70kW)	09-		R		**CF827**	Loc	Ø 20,64	Alu
	09-				**PF700**	Bch	Ø 22,20	Alu, -ESP
1.3 MJT Eng.223A9.000 (62kW)	09-				**PF700**	Bch	Ø 22,20	Alu
1.4 Eng.199A7.000 (55kW)	09-		R		**CF827**	Loc	Ø 20,64	Alu
1.4 Eng.350A1.000 (57kW)	09-		R		**CF827**	Loc	Ø 20,64	Alu
	09-				**PF700**	Bch	Ø 22,20	Alu, A/T
1.4 16v T. MultiAir Eng.955A2.000 (99kW)	09-		R		**CF827**	Loc	Ø 20,64	Alu
	09-				**PF700**	Bch	Ø 22,20	Alu, -ESP
1.4 LPG Eng.350A1.000 (57kW)	09-		R		**CF827**	Loc	Ø 20,64	Alu
	09-				**PF858**	Bch	Ø 23,81	Alu
1.4 MultiAir Eng.955A6.000 (77kW)	09-		R		**CF827**	Loc	Ø 20,64	Alu
	09-				**PF700**	Bch	Ø 22,20	Alu, -ESP
1.6 MJT Eng.955A3.000 (88kW)	09-		R		**CF827**	Loc	Ø 20,64	Alu
	09-				**PF700**	Bch	Ø 22,20	Alu, -ESP, M/T+A/T

FIAT

		Spare Parts	F/R	L/R	FRITECH ref.		DIMENSIONS mm.	NOTE
Punto I (176,C), Cabrio 9/93-9/99								
1.1 Eng.176A6.000/ 176B2.000 (40kW)	11/93-99		R		**CF067**	Bdx	Ø 20,64	+ABS
	11/93-99		R		**CF090**	Loc	Ø 20,64	-ABS
	11/93-99				**PF006**		Ø 20,64	
	93-99				**CZ070**		Ø 25,40	RHD
1.2 16v, Cabrio Eng.176B9.000 (63kW)	97-99		R		**CF067**	Bdx	Ø 20,64	+ABS
	97-99		R		**CF090**	Loc	Ø 20,64	-ABS
	97-99				**PF006**		Ø 20,64	
	97-99				**CZ070**		Ø 25,40	RHD
1.2 60, Cabrio Eng.176A7.000 (43kW)	94-99		R		**CF067**	Bdx	Ø 20,64	+ABS
	94-99		R		**CF090**	Loc	Ø 20,64	-ABS
	94-99				**PF006**		Ø 20,64	
	94-99				**CZ070**		Ø 25,40	RHD
1.2 60, Cabrio Eng.176B1.000/ 176B4.000 (44kW)	94-99		R		**CF067**	Bdx	Ø 20,64	+ABS
	94-99		R		**CF090**	Loc	Ø 20,64	-ABS
	94-99				**PF006**		Ø 20,64	
	94-99				**CZ070**		Ø 25,40	RHD
1.2 75 Eng.176A8.000 (54kW)	94-99		R		**CF067**	Bdx	Ø 20,64	+ABS
	94-99		R		**CF090**	Loc	Ø 20,64	-ABS
	94-99				**PF006**		Ø 20,64	
	94-99				**CZ070**		Ø 25,40	RHD
1.4 GT T. Eng.176A4.000 (98kW)	94-96				**PF042**	Bdx	Ø 22,20	Supplied -Servo
	94-96				**CZ072**		Ø 25,40	RHD
1.4 GT T. Eng.176B6.000 (96kW)	96-99				**PF042**	Bdx	Ø 22,20	Supplied -Servo
	96-99				**CZ072**		Ø 25,40	RHD
1.6 90, Cabrio Eng.176A9.000 (65kW)	94-97		R		**CF067**	Bdx	Ø 20,64	+ABS
	94-97		R		**CF090**	Loc	Ø 20,64	-ABS
	94-97				**PF006**		Ø 20,64	
	94-97				**CZ070**		Ø 25,40	RHD
1.7 D Eng.176B3.000 (42kW)	94-97		R		**CF067**	Bdx	Ø 20,64	+ABS
	94-97		R		**CF090**	Loc	Ø 20,64	-ABS
	94-97				**PF006**		Ø 20,64	
	94-97				**CZ072**		Ø 25,40	RHD
1.7 TD Eng.176A5.000 (52kW)	94-99		R		**CF067**	Bdx	Ø 20,64	+ABS
	94-99		R		**CF116**	Loc	Ø 22,00	+ABS
	94-99				**PF006**		Ø 20,64	
1.7 TD, TDs Eng.176A3.000 (51kW)	94-99		R		**CF067**	Bdx	Ø 20,64	+ABS
	94-99		R		**CF116**	Loc	Ø 22,00	+ABS
	94-99				**PF006**		Ø 20,64	
1.7 TD, TDs Eng.176B7.000 (46kW)	96-99		R		**CF067**	Bdx	Ø 20,64	+ABS
	96-99		R		**CF090**	Loc	Ø 20,64	-ABS
	96-99				**PF006**		Ø 20,64	
	96-99				**CZ072**		Ø 25,40	RHD
Punto II (188) 9/99-7/03								
1.2 Eng.188A4.000 (44kW)	99-03		R		**CF151**		Ø 20,64	Alu, M/T
	99-03				**PF235**		Ø 20,64	M/T
	99-03				**PZ038**	Ap	Ø 15,87	
1.2 16v Eng.188A5.000 (59kW)	99-03		R		**CF255**	Loc	Ø 22,00	Alu, A/T
	99-03		R		**CF151**		Ø 20,64	Alu, M/T
	99-03				**PF236**	Bch	Ø 22,20	Alu, +ABS, A/T
	99-03				**PF235**		Ø 20,64	M/T
	99-03				**PZ039**	Valeo	Ø 15,87	
1.8 HGT Eng.183A1.000/ 188A6.000 (96kW)	99-03		R		**CF255**	Loc	Ø 22,00	Alu, A/T
	99-03				**PF236**	Bch	Ø 22,20	Alu, +ABS, A/T
	99-03				**PF235**		Ø 20,64	-ABS, M/T
1.9 DS 60 Eng.188A3.000 (44kW)	99-03		R		**CF255**	Loc	Ø 22,00	Alu, A/T
	99-03				**PF236**	Bch	Ø 22,20	Alu, +ABS, A/T
	99-03				**PF235**		Ø 20,64	-ABS, M/T
	99-03				**PZ039**	Valeo	Ø 15,87	
1.9 JTD Eng.188A2.000 (59kW)	99-03		R		**CF255**	Loc	Ø 22,00	Alu
	99-03				**PF236**	Bch	Ø 22,20	Alu, +ABS, A/T
	99-03				**PF235**		Ø 20,64	-ABS, M/T
	99-03				**PZ039**	Valeo	Ø 15,87	

		Spare Parts	F/R	L/R	FRITECH ref.		DIMENSIONS mm.	NOTE
1.9 JTD Eng.188A7.000 (63kW)	01-03		R		**CF151**		Ø 20,64	Alu
	01-03		R		**CF255**		Ø 22,00	Alu
	01-03				**PF320**	Bch	Ø 20,64	+ABS
	01-03				**PF536**	Bch	Ø 20,64	-ABS
Punto III (188) 6/03-12/10								
1.2 16v Eng.188A5.000 (59kW)	03-10		R		**CF151**		Ø 20,64	Alu
	03-10				**PF320**	Bch	Ø 20,64	+ABS
	03-10				**PF536**	Bch	Ø 20,64	-ABS
	03-				**PZ039**	Valeo	Ø 15,87	
1.2 8v Eng.188A4.000 (44kW)	03-10		R		**CF151**		Ø 20,64	Alu
	03-10				**PF320**	Bch	Ø 20,64	+ABS
	03-10				**PF536**	Bch	Ø 20,64	-ABS
	03-10				**PZ038**	Ap	Ø 15,87	
1.2 Natural Power Eng.188A4.000 (44kW)	03-10		R		**CF151**		Ø 20,64	Alu
	03-10				**PF320**	Bch	Ø 20,64	+ABS
	03-10				**PF536**	Bch	Ø 20,64	-ABS
	03-				**PZ038**	Ap	Ø 15,87	
	03-				**PZ039**	Valeo	Ø 15,87	
1.3 JTD Eng.188A9.000 (51kW)	03-10		R		**CF255**	Loc	Ø 22,00	Alu, +VDC
	03-10				**PF542**	Bch	Ø 22,20	Alu, +ABS, +ESP
	03-10				**PF532**	Bch	Ø 22,20	+ABS, -ESP
	03-10				**PF525**	Bch	Ø 22,20	-ABS
	03-10				**PF841**	Trw	Ø 22,20	Alu, +ABS, +ESP, +TC, LHD
	03-				**PZ039**	Valeo	Ø 15,87	
1.4 16v Eng.843A1.000 (70kW)	03-10		R		**CF790**	Loc	Ø 20,64	Alu
	03-10				**PF542**	Bch	Ø 22,20	Alu, +ABS, +ESP
	03-10				**PF532**	Bch	Ø 22,20	+ABS, -ESP
	03-10				**PF525**	Bch	Ø 22,20	-ABS
	03-10				**PF841**	Trw	Ø 22,20	Alu, +ABS, +ESP, +TC, LHD
	03-				**PZ038**	Ap	Ø 15,87	
1.8 16v Eng.188A6.000 (96kW)	03-10				**PF542**	Bch	Ø 22,20	Alu, +ABS, +ESP
	03-10				**PZ038**	Ap	Ø 15,87	
1.9 JTD Eng.188A7.000 (63kW)	03-10		R		**CF255**	Loc	Ø 22,00	Alu, +ABS
	03-10				**PF542**	Bch	Ø 22,20	Alu, +ABS, +ESP
	03-10				**PF532**	Bch	Ø 22,20	+ABS, -ESP
	03-10				**PF525**	Bch	Ø 22,20	-ABS
	01-				**PZ039**	Valeo	Ø 15,87	
1.9 JTD Eng.188B2.000 (74kW)	03-10		R		**CF790**	Loc	Ø 20,64	Alu, Emotion
	03-10				**PF542**	Bch	Ø 22,20	Alu, +ABS, +ESP
	03-10				**PF532**	Bch	Ø 22,20	+ABS, -ESP
	03-10				**PF525**	Bch	Ø 22,20	-ABS
	03-10				**PF841**	Trw	Ø 22,20	Alu, +ABS, +ESP, +TC, LHD
	03-				**PZ039**	Valeo	Ø 15,87	
Punto IV (199) 2/12-								
0.9 Twinair Eng.199B6.000 (77kW)	13-		R		**CF827**	Loc	Ø 20,64	Alu
	12-				**PF700**	Bch	Ø 22,20	Alu
	13-				**PZ146**	Fte	Ø 15,87	Alu
0.9 Twinair Eng.312A2.000 (63kW)	12-		R		**CF827**	Loc	Ø 20,64	Alu
	12-				**PF700**	Bch	Ø 22,20	Alu
	12-				**PZ146**	Fte	Ø 15,87	Alu
1.2 8v Eng.169A4.000 (51kW)	12-		R		**CF827**	Loc	Ø 20,64	Alu
	12-				**PF700**	Bch	Ø 22,20	Alu
	12-				**PZ146**	Fte	Ø 15,87	Alu
1.3 MJT Eng.199A2.000/199A9.000 (55kW)	12-		R		**CF827**	Loc	Ø 20,64	Alu
	12-				**PF700**	Bch	Ø 22,20	Alu
	12-				**PZ146**	Fte	Ø 15,87	Alu
1.3 MJT Eng.199B1.000 (70kW)	12-		R		**CF827**	Loc	Ø 20,64	Alu
	12-				**PF700**	Bch	Ø 22,20	Alu
	12-				**PZ146**	Fte	Ø 15,87	Alu
1.3 MJT Eng.199B4.000 (62kW)	12-		R		**CF827**	Loc	Ø 20,64	Alu
	12-				**PF700**	Bch	Ø 22,20	Alu
	12-				**PZ146**	Fte	Ø 15,87	Alu
1.4 8v Eng.350A1.000 (57kW)	12-		R		**CF827**	Loc	Ø 20,64	Alu
	12-				**PF700**	Bch	Ø 22,20	Alu, M/T

FIAT

		Spare Parts	F/R	L/R	FRITECH ref.		DIMENSIONS mm.	NOTE
1.4 8v Eng.350A1.000 (57kW)	12-				**PZ146**	Fte	Ø 15,87	Alu
1.4 8v Easypower, NaturalPower Eng.350A1.000	12-		R		**CF827**	Loc	Ø 20,64	Alu
(57kW)	12-				**PF700**	Bch	Ø 22,20	Alu
	12-				**PZ146**	Fte	Ø 15,87	Alu
1.4 MultiAir Eng.955A6.000 (77kW)	12-		R		**CF827**	Loc	Ø 20,64	Alu
	12-				**PF700**	Bch	Ø 22,20	Alu
	12-				**PZ146**	Fte	Ø 15,87	Alu
1.4 T Eng.955A2.000 (99kW)	12-		R		**CF827**	Loc	Ø 20,64	Alu
	12-				**PF700**	Bch	Ø 22,20	Alu
	12-				**PZ146**	Fte	Ø 15,87	Alu
Regata (138) 9/83-12/90								
1.3 70 Eng.138B2.000 (50kW)	9/83-3/86		R		**CF004**		Ø 19,05	
	4/86-86				**PF009**	Loc	Ø 20,64	
	9/83-3/86				**PF053**		Ø 19,05	
	9/83-86				**CT004**		Ø 25,40	Alu
1.3 70 Eng.149A3.000/ 149A7.000 (48kW)	9/83-3/86		R		**CF004**		Ø 19,05	
	4/86-89				**PF009**	Loc	Ø 20,64	
	9/83-3/86				**PF053**		Ø 19,05	
	9/83-89				**CT004**		Ø 25,40	Alu
1.5 75 Eng.138B3.048 (55kW)	9/83-3/86		R		**CF004**		Ø 19,05	
	4/86-87				**PF009**	Loc	Ø 20,64	
	9/83-3/86				**PF053**		Ø 19,05	
	9/83-87				**CT004**		Ø 25,40	Alu
1.5 75 Eng.138C3.048 (55kW)	9/83-3/86		R		**CF004**		Ø 19,05	
	4/86-87				**PF009**	Loc	Ø 20,64	
	9/83-3/86				**PF053**		Ø 19,05	
	9/83-87				**CT004**		Ø 25,40	Alu
1.5 85 Eng.138B3.000 (60kW)	83-85		R		**CF004**		Ø 19,05	
	83-85				**PF053**		Ø 19,05	
	83-85				**CT004**		Ø 25,40	Alu
1.5 85 Eng.149A5.000 (58kW)	85-87		R		**CF004**		Ø 19,05	
	85-87				**PF009**	Loc	Ø 20,64	
	85-87				**PF053**		Ø 19,05	
	85-87				**CT004**		Ø 25,40	Alu
1.6 100 Super Eng.149A2.000/ 149A4.000/	9/83-3/86		R		**CF004**		Ø 19,05	
149C3.000 (70-74kW)	4/86-89				**PF009**	Loc	Ø 20,64	
	9/83-3/86				**PF053**		Ø 19,05	
	9/83-89				**CT004**		Ø 25,40	Alu
1.6 85 Eng.149A.000 (60kW)	9/83-3/86		R		**CF004**		Ø 19,05	
	4/86-89				**PF009**	Loc	Ø 20,64	
	9/83-3/86				**PF053**		Ø 19,05	
	9/83-89				**CT004**		Ø 25,40	Alu
1.6 i.e. 90 Eng.149C2.000 (66kW)	87-		R		**CF004**		Ø 19,05	
	87-89				**PF009**	Loc	Ø 20,64	
	87-89				**CT004**		Ø 25,40	Alu
1.7 D Eng.149B3.000 (44kW)	85-89		R		**CF004**		Ø 19,05	
	4/86-89				**PF009**	Loc	Ø 20,64	
	-3/86				**PF053**		Ø 19,05	
	85-89				**CT004**		Ø 25,40	Alu
1.7 D 60 Eng.138B6.000 (43kW)	9/83-3/86		R		**CF004**		Ø 19,05	
	4/86-				**PF009**	Loc	Ø 20,64	
	9/83-3/86				**PF053**		Ø 19,05	
	9/83-86				**CT004**		Ø 25,40	Alu
1.9 D 65 Eng.149A1.000 (48kW)	84-3/86		R		**CF004**		Ø 19,05	
	4/86-89				**PF009**	Loc	Ø 20,64	
	84-3/86				**PF053**		Ø 19,05	
	84-89				**CT004**		Ø 25,40	Alu
1.9 TD 80 Eng.831D1.000 (59kW)	86-		R		**CF004**		Ø 19,05	
	4/86-89				**PF009**	Loc	Ø 20,64	
	86-				**PF053**		Ø 19,05	
	86-89				**CT004**		Ø 25,40	Alu
Regata Weekend 1/84-12/90								
1.3 70 Eng.138B2.000 (50kW)	84-		R		**CF004**		Ø 19,05	
	4/86-89				**PF009**	Loc	Ø 20,64	

		Spare Parts	F/R	L/R	FRITECH ref.		DIMENSIONS mm.	NOTE
1.3 70 Eng.138B2.000 (50kW)	84-				**PF053**		Ø 19,05	
	84-89				**CT004**		Ø 25,40	Alu
1.5 75 Eng.138C3.048 (55kW)	84-		R		**CF004**		Ø 19,05	
	84-89				**PF009**	Loc	Ø 20,64	
	84-				**PF053**		Ø 19,05	
	84-89				**CT004**		Ø 25,40	Alu
1.5 85 Eng.138C3.000 (60kW)	84-3/86		R		**CF004**		Ø 19,05	
	4/86-89				**PF009**	Loc	Ø 20,64	
	84-3/86				**PF053**		Ø 19,05	
	84-89				**CT004**		Ø 25,40	Alu
1.6 100 Eng.149A4.000 (74kW)	84-3/86		R		**CF004**		Ø 19,05	
	4/86-89				**PF009**	Loc	Ø 20,64	
	84-3/86				**PF053**		Ø 19,05	
	84-89				**CT004**		Ø 25,40	Alu
1.6 i.e. 100 Eng.149A2.000 (74kW)	87-90		R		**CF004**		Ø 19,05	
	87-90				**PF009**	Loc	Ø 20,64	
	87-90				**CT004**		Ø 25,40	Alu
1.6 i.e. 90 Eng.149C2.000 (66kW)	87-89		R		**CF004**		Ø 19,05	
	87-89				**PF009**	Loc	Ø 20,64	
	87-89				**CT004**		Ø 25,40	Alu
1.7 D Eng.149B3.000 (44kW)	84-89		R		**CF004**		Ø 19,05	
	4/86-89				**PF009**	Loc	Ø 20,64	
	84-3/86				**PF053**		Ø 19,05	
	84-89				**CT004**		Ø 25,40	Alu
1.9 D 65 Eng.149A1.000 (48kW)	84-89		R		**CF004**		Ø 19,05	
	4/86-89				**PF009**	Loc	Ø 20,64	
	84-3/86				**PF053**		Ø 19,05	
	84-89				**CT004**		Ø 25,40	Alu
Ritmo I (138A) 1/78-12/87								
1.0 Eng.127A6.000 (44kW)	03/83-		R		**CF201**		Ø 17,46	
	79-7/82		R		**CF347**		Ø 17,46	
	79-7/82				**PF047**		Ø 19,05	
	79-7/82				**CT001**	Benditalia	Ø 25,40	Alu
1.3 Eng.138A3.000 (55kW)	81-82		R		**CF347**		Ø 17,46	
	81-82				**PF047**		Ø 19,05	
	81-82				**CT001**	Benditalia	Ø 25,40	Alu
1.3 65 Eng.138A1.000 (48kW)	03/83-		R		**CF201**		Ø 17,46	
	78-7/82		R		**CF347**		Ø 17,46	
	78-7/82				**PF047**		Ø 19,05	
	78-7/82				**CT001**	Benditalia	Ø 25,40	Alu
1.3 70 Eng.149A3.000/ 149A7.000 (45kW)	4/83-85		R		**CF004**		Ø 19,05	
	4/83-85				**PF053**		Ø 19,05	
	4/83-85				**CT004**		Ø 25,40	Alu
1.5 Eng.138A2.000 (55-63kW)	78-82		R		**CF004**	Ap	Ø 19,05	
	3/81-7/82		R		**CF347**		Ø 17,46	
	3/81-7/82				**PF047**		Ø 19,05	
	3/81-7/82				**CT001**	Benditalia	Ø 25,40	Alu
1.5 75 Eng.138C3.048 (55kW)	03/83-		R		**CF201**		Ø 17,46	
	3/81-7/82		R		**CF347**		Ø 17,46	
	3/81-7/82				**PF047**		Ø 19,05	
	3/81-7/82				**CT001**	Benditalia	Ø 25,40	Alu
1.5 85 Eng.138A4.000 (63kW)	3/81-7/82		R		**CF347**		Ø 17,46	
	3/81-7/82				**PF047**		Ø 19,05	
	3/81-7/82				**CT001**	Benditalia	Ø 25,40	Alu
1.5 i.e. 75 Eng.138C2.048/ 149C1.000 (55kW)	3/81-7/82		R		**CF347**		Ø 17,46	
1.6 105 Eng.138AR.000 (77kW)	81-7/82		R		**CF347**		Ø 17,46	
	81-7/82				**PF047**		Ø 19,05	
	81-7/82				**CT001**	Benditalia	Ø 25,40	Alu
1.6 i.e. 90 Eng.149C2.000 (66kW)	85-87		R		**CF004**	Ap	Ø 19,05	
1.7 D 55 Eng.138A5.000/ 138B5.000 (40-43kW)	03/83-		R		**CF201**		Ø 17,46	
	80-7/82		R		**CF347**		Ø 17,46	
	80-7/82				**PF047**		Ø 19,05	
	80-7/82				**CT001**	Benditalia	Ø 25,40	Alu

		Spare Parts	F/R	L/R	FRITECH ref.		DIMENSIONS mm.	NOTE
2.0 TC Abarth Eng.138AR1.000 (92kW)	81-82		R		**CF004**	Ap	Ø 19,05	
	81-82		R		**CF347**		Ø 17,46	
	81-82				**PF047**		Ø 19,05	
	81-82				**CT001**	Benditalia	Ø 25,40	Alu
Ritmo II (138A) 10/82-12/88								
1.1 60 Eng.138B.000/ 138B1.000 (40kW)	8/82-3/83		R		**CF201**		Ø 17,46	
	4/83-85		R		**CF004**		Ø 19,05	
	82-85				**PF053**		Ø 19,05	
	82-85				**CT004**		Ø 25,40	Alu
1.1 60 Eng.146A4.048 (43kW)	85-87		R		**CF004**		Ø 19,05	
1.3 70 Eng.138B2.000 (50kW)	83-85		R		**CF004**	Ap	Ø 19,05	
	03/83-		R		**CF201**		Ø 17,46	
1.5 75 Eng.138A4.000 (55kW)	85-88		R		**CF004**	Ap	Ø 19,05	
	03/83-		R		**CF201**		Ø 17,46	
1.5 85 Eng.138B3.000 (60kW)	3/83-		R		**CF201**		Ø 17,46	
	4/83-87		R		**CF004**		Ø 19,05	
	83-87				**PF053**		Ø 19,05	
	83-87				**CT004**		Ø 25,40	Alu
1.5 85 Eng.149A5.000 (58kW)	85-87		R		**CF004**	Ap	Ø 19,05	
	03/83-		R		**CF201**		Ø 17,46	
1.5 i.e. 75 Eng.138C2.048/ 149C1.000 (55kW)	85-88		R		**CF004**	Ap	Ø 19,05	
1.6 100 Eng.149A4.000 (74kW)	83-87		R		**CF004**	Ap	Ø 19,05	
1.6 105 Eng.138AR.000 (77kW)	83-87		R		**CF347**	Luc	Ø 17,46	
	3/83-		R		**CF201**		Ø 17,46	
	4/83-87		R		**CF004**		Ø 19,05	
1.6 i.e. 90 Eng.138AR.000 (66kW)	85-87		R		**CF004**	Ap	Ø 19,05	
1.7 D Eng.138C.000/ 149B3.000 (44kW)	85-87		R		**CF004**		Ø 19,05	
	85-87				**PF009**	Loc	Ø 20,64	
	-87				**PF053**		Ø 19,05	
	85-87				**CT004**		Ø 25,40	Alu
1.7 D 60 Eng.138B6.000 (43kW)	82-85		R		**CF347**	Luc	Ø 17,46	
	8/82-3/83		R		**CF201**		Ø 17,46	
	4/83-85		R		**CF004**		Ø 19,05	
	-85				**PF009**	Loc	Ø 20,64	
	8/82-85				**PF053**		Ø 19,05	
	82-85				**CT004**		Ø 25,40	Alu
1.9 TD 80 Eng.831D1.000 (59kW)	4/85-87		R		**CF004**		Ø 19,05	
	4/85-87				**PF009**	Loc	Ø 20,64	
	4/85-87				**CT004**		Ø 25,40	Alu
2.0 TC Abarth Eng.138AR2.000 (92kW)	82-83		R		**CF347**		Ø 17,46	
	83-87		R		**CF004**		Ø 19,05	
	82-83				**PF047**		Ø 19,05	
	83-87				**PF053**		Ø 19,05	
	82-83				**CT001**	Benditalia	Ø 25,40	Alu
	83-87				**CT004**		Ø 25,40	Alu
2.0 TC Abarth Eng.138AR2.000 (96kW)	83-87		R		**CF004**		Ø 19,05	
	83-87				**PF116**		Ø 22,20	
	83-87				**CT004**		Ø 25,40	Alu
Sedici (189) 1/06-12/14								
1.6 16v , 4WD Eng.M16A (88kW)	09-				**PF849**	Bch	Ø 22,20	Alu, +ESP
	09-				**PF848**	Bch	Ø 22,20	Alu, -ESP
	09-				**PZ145**	Fte	Ø 15,87	
1.6 16v 4WD Eng.M16A (79kW)	06-		R		**CF808**	Bch	Ø 19,05	Alu
	06-				**PF848**	Bch	Ø 22,20	Alu, +ABS, -VDC
	06-				**PF849**	Bch	Ø 22,20	Alu, +ABS, +VDC
	06-				**PZ145**	Fte	Ø 15,87	
1.9 MJT, 4WD Eng.D19AA (88kW)	06-		R		**CF808**	Bch	Ø 19,05	Alu
	06-				**PF848**	Bch	Ø 22,20	Alu, +ABS, -VDC
	06-				**PF849**	Bch	Ø 22,20	Alu, +ABS, +VDC
	06-				**PZ145**	Fte	Ø 15,87	
2.0 MJT 16v, 4WD Eng.D20AA (99kW)	09-				**PF849**	Bch	Ø 22,20	Alu, +ESP
	09-				**PF848**	Bch	Ø 22,20	Alu, -ESP
	09-				**PZ145**	Fte	Ø 15,87	

		Spare Parts	F/R	L/R	FRITECH ref.		DIMENSIONS mm.	NOTE
Seicento (187) 1/98-12/10								
0.9 Eng.1170A1.046 (29kW)	4/98-		R		**CF004**		Ø 19,05	
	4/98-				**PF034**		Ø 19,05	
1.1 Eng.176B2.000/ 187A1.000 (40kW)	4/98-		R		**CF004**		Ø 19,05	
	4/98-				**PF034**		Ø 19,05	-ABS
Elektra (30kW)	1/99-				**PF034**		Ø 19,05	
Stilo (192), MultiWagon 10/01-12/10								
1.2 16v (Exc. SW) Eng.188A5.000 (59kW)	02-				**PF543**	Bch	Ø 22,20	Alu, -ESP
	02-				**PF481**	Bch	Ø 22,20	Ch -367397
1.4 16v Eng.192B2.000 (66kW)	07-				**PF481**	Bch	Ø 22,20	+ESP
	07-				**PF543**	Bch	Ø 22,20	Alu, -ESP
1.4 16v Eng.843A1.000 (70kW)	04-				**PF543**	Bch	Ø 22,20	Alu, -ESP
1.6 16v Eng.182B6.000 (76kW)	01-				**PF543**	Bch	Ø 22,20	Alu, -ESP
	02-				**PF481**	Bch	Ø 22,20	Ch -367397
1.6 16V Eng.192B3.000 (77kW)	05-				**PF543**	Bch	Ø 22,20	Alu, -ESP
	02-				**PF481**	Bch	Ø 22,20	
1.8 16v Eng.192A4.000 (98kW)	-03				**PF500**	Bch	Ø 23,81	Vett 0367397-, Alu, +ABS, -VDC
	01-				**PF482**	Bch	Ø 23,81	Alu, +ABS, +VDC
1.9 JTD Eng.192A1.000/ 937A7.000 (85kW)	01-				**PF543**	Bch	Ø 22,20	Alu, -ESP
	02-				**PF481**	Bch	Ø 22,20	Ch -367397
1.9 JTD Eng.192A3.000 (59kW)	02-				**PF543**	Bch	Ø 22,20	Alu, -ESP
	02-				**PF481**	Bch	Ø 22,20	Ch -367397
1.9 JTD Eng.192A5.000 (103kW)	04-				**PF482**	Bch	Ø 23,81	Alu, +ABS, +VDC
	04-				**PF500**	Bch	Ø 23,81	Alu, +ABS, -VDC
1.9 JTD Eng.192B5.000 (66kW)	04-				**PF543**	Bch	Ø 22,20	Alu, -ESP
	02-				**PF481**	Bch	Ø 22,20	
1.9 JTD (Belgium) Eng.192B1.000 (100kW)	04-				**PF482**	Bch	Ø 23,81	Alu, +ABS, +VDC
	04-				**PF500**	Bch	Ø 23,81	Alu, +ABS, -VDC
1.9 JTD (France) Eng.937A4.000 (93kW)	03-				**PF482**	Bch	Ø 23,81	Alu, +ABS, +VDC
	03-				**PF500**	Bch	Ø 23,81	Alu, +ABS, -VDC
1.9 MJT Eng.192A8.000 (88kW)	05-				**PF543**	Bch	Ø 22,20	Alu, -ESP
	02-				**PF481**	Bch	Ø 22,20	Ch -367397
1.9 MJT Eng.192A9.000 (74kW)	05-				**PF543**	Bch	Ø 22,20	Alu, -ESP
1.9 MJT Eng.937A5.000 (110kW)	05-				**PF500**	Bch	Ø 23,81	Alu, +ABS, -VDC
2.4 20v (Exc. SW) Eng.192A2.000 (125kW)	01-				**PF482**	Bch	Ø 23,81	Alu, +ABS, +VDC
Tempra (159) 3/90-8/96								
1.4 i.e. Eng.159A2.000 (57kW)	91-96		R		**CF079**		Ø 17,50	
	91-96		R		**CF101**		Ø 19,05	
	91-				**PF132**		Ø 20,64	+ABS
	91-96				**PF006**		Ø 20,64	-ABS
1.4 i.e. Eng.160A1.046 (51kW)	3/93-		R		**CF130**	Bdx	Ø 22,00	
	3/93-				**PF042**	Bdx	Ø 22,20	Supplied -Servo, -ABS
	3/92-				**PF132**		Ø 20,64	+ABS
	-93				**CZ011**		Ø 25,40	Ch 7018587-
	92-				**CZ023**		Ø 25,40	Ch -7018587
	-93				**PZ060**		Ø 19,05	Ch 7018587-
1.4 i.e. Eng.836A4.000 (52kW)	3/93-		R		**CF130**	Bdx	Ø 22,00	
	3/93-				**PF042**	Bdx	Ø 22,20	Supplied -Servo, -ABS
	3/92-				**PF132**		Ø 20,64	+ABS
	-93				**CZ011**		Ø 25,40	Ch 7018587-
	92-				**CZ023**		Ø 25,40	Ch -7018587
	-93				**PZ060**		Ø 19,05	Ch 7018587-
1.6 Eng.159A3.000 (63kW)	90-93		R		**CF079**		Ø 17,50	
	90-93		R		**CF101**		Ø 19,05	
	90-				**PF132**		Ø 20,64	+ABS
	90-93				**PF006**		Ø 20,64	-ABS
	90-92				**CZ023**		Ø 25,40	
	92-93				**CZ011**		Ø 25,40	
	90-93				**PZ060**		Ø 19,05	
1.6 i.e. Eng.159A3.046 (57kW)	90-96		R		**CF079**		Ø 17,50	
	90-96		R		**CF101**		Ø 19,05	
	90-				**PF132**		Ø 20,64	+ABS
	90-96				**PF006**		Ø 20,64	-ABS
	90-96				**CZ011**		Ø 25,40	

FIAT

		Spare Parts	F/R	L/R	FRITECH ref.		DIMENSIONS mm.	NOTE
1.6 i.e. Eng.159A3.046 (57kW)	90-96				**CZ023**		Ø 25,40	
	90-96				**PZ060**		Ø 19,05	
1.6 i.e. Eng.159A3.048/ 835C1.000 (55kW)	3/93-		R		**CF130**	Bdx	Ø 22,00	
	3/93-				**PF042**	Bdx	Ø 22,20	Supplied -Servo, -ABS
	92-				**PF132**		Ø 20,64	+ABS
1.6 i.e. Eng.159B9.000 (63-66kW)	94-				**PF042**	Bdx	Ø 22,20	Supplied -Servo, -ABS
1.8 i.e. Eng.159A4.046 (77kW)	3/93-		R		**CF135**	Bdx	Ø 20,64	
	92-93		R		**CF079**		Ø 17,50	
	3/93-				**PF042**	Bdx	Ø 22,20	Supplied -Servo, -ABS
	92-				**PF132**		Ø 20,64	+ABS
	92-93				**PF006**		Ø 20,64	-ABS
	92-96				**CZ011**		Ø 25,40	
	92-96				**PZ060**		Ø 19,05	
1.8 i.e. Eng.835C2.000 (76kW)	93-				**PF042**	Bdx	Ø 22,20	Supplied -Servo, -ABS
1.8 i.e. Eng.835C4.000 (66kW)	3/93-				**PF042**	Bdx	Ø 22,20	Supplied -Servo, -ABS
	93-				**CZ023**		Ø 25,40	
1.8 i.e. Eng.836A5.000 (74kW)	94-				**PF042**	Bdx	Ø 22,20	Supplied -Servo, -ABS
	94-96				**CZ023**		Ø 25,40	
1.9 D Eng.160A7.000 (48kW)	3/93-		R		**CF130**	Bdx	Ø 22,00	
	91-93		R		**CF079**		Ø 17,50	
	3/93-				**PF042**	Bdx	Ø 22,20	Supplied -Servo, -ABS
	91-				**PF132**		Ø 20,64	+ABS
	91-93				**PF006**		Ø 20,64	-ABS
1.9 TD Eng.160A6.000/ 160D1.000 (66kW)	3/93-		R		**CF135**	Bdx	Ø 20,64	
	90-93		R		**CF079**		Ø 17,50	
	3/93-				**PF042**	Bdx	Ø 22,20	Supplied -Servo, -ABS
	3/90-				**PF132**		Ø 20,64	+ABS
	90-93				**PF006**		Ø 20,64	-ABS
	90-96				**CZ024**		Ø 25,40	
1.9 TD Eng.160B6.046 (59kW)	3/93-		R		**CF135**	Bdx	Ø 20,64	
	92-93		R		**CF079**		Ø 17,50	
	3/93-				**PF042**	Bdx	Ø 22,20	Supplied -Servo, -ABS
	92-				**PF132**		Ø 20,64	+ABS
	92-93				**PF006**		Ø 20,64	-ABS
	93-95				**CZ024**		Ø 25,40	
2.0 i.e., 4WD Eng.159A6.046 (83kW)	90-				**PF042**	Bdx	Ø 22,20	Supplied -Servo, -ABS
	90-96				**CZ011**		Ø 25,40	
	90-96				**PZ034**		Ø 19,05	SW, 4WD
	90-96				**PZ060**		Ø 19,05	
Tempra (159) SW 3/90-8/96								
1.4 i.e. Eng.159A2.000 (57kW)	91-96		R		**CF130**	Bdx	Ø 22,00	
	91-96		R		**CF079**		Ø 17,50	
	91-96		R		**CF101**		Ø 19,05	
	91-96				**PF132**		Ø 20,64	+ABS
	91-96				**PF006**		Ø 20,64	-ABS
1.4 i.e. Eng.160A1.046/ 836A4.000 (51kW)	92-		R		**CF130**	Bdx	Ø 22,00	
	92-				**PF042**	Bdx	Ø 22,20	Supplied -Servo, -ABS
	92-				**PF132**		Ø 20,64	+ABS
	-96				**CZ011**		Ø 25,40	Ch 7018587-
	92-				**CZ023**		Ø 25,40	Ch -7018587
	-96				**PZ060**		Ø 19,05	Ch 7018587-
1.4 i.e. Eng.836A4.000 (52kW)	92-		R		**CF130**	Bdx	Ø 22,00	
	92-				**PF042**	Bdx	Ø 22,20	Supplied -Servo, -ABS
	92-				**PF132**		Ø 20,64	+ABS
	-96				**CZ011**		Ø 25,40	Ch 7018587-
	92-				**CZ023**		Ø 25,40	Ch -7018587
	-96				**PZ060**		Ø 19,05	Ch 7018587-
1.6 Eng.159A3.000 (63kW)	90-93		R		**CF079**		Ø 17,50	
	90-93		R		**CF101**		Ø 19,05	
	90-93				**PF132**		Ø 20,64	+ABS
	90-93				**PF006**		Ø 20,64	-ABS
	90-92				**CZ023**		Ø 25,40	
	92-93				**CZ011**		Ø 25,40	
	90-93				**PZ060**		Ø 19,05	

		Spare Parts	F/R	L/R	FRITECH ref.		DIMENSIONS mm.	NOTE
1.6 i.e. Eng.159A3.046/ 835C1.000 (57kW)	90-96		R		**CF079**		Ø 17,50	
	90-96		R		**CF101**		Ø 19,05	
	90-96				**PF132**		Ø 20,64	+ABS
	90-96				**PF006**		Ø 20,64	-ABS
	90-92				**CZ023**		Ø 25,40	
	92-96				**CZ011**		Ø 25,40	
	90-96				**PZ060**		Ø 19,05	
1.6 i.e. Eng.159A3.048/ 835C1.000 (55kW)	92-		R		**CF130**	Bdx	Ø 22,00	
	92-				**PF042**	Bdx	Ø 22,20	Supplied -Servo, -ABS
	92-				**PF132**		Ø 20,64	+ABS
1.8 i.e. Eng.159A4.046 (77kW)	3/93-		R		**CF135**	Bdx	Ø 20,64	
	92-93		R		**CF079**		Ø 17,50	
	3/93-				**PF042**	Bdx	Ø 22,20	Supplied -Servo, -ABS
	92-				**PF132**		Ø 20,64	+ABS
	92-93				**PF006**		Ø 20,64	-ABS
	92-				**CZ011**		Ø 25,40	
	92-				**PZ060**		Ø 19,05	
1.8 i.e. Eng.835C4.000 (66kW)	93-96				**CZ023**		Ø 25,40	
1.8 i.e. Eng.836A5.000 (74kW)	94-96				**CZ023**		Ø 25,40	
1.9 D Eng.160A7.000 (48kW)	3/93-		R		**CF130**	Bdx	Ø 22,00	
	91-93		R		**CF079**		Ø 17,50	
	3/93-				**PF042**	Bdx	Ø 22,20	Supplied -Servo, -ABS
	91-				**PF132**		Ø 20,64	+ABS
	91-93				**PF006**		Ø 20,64	-ABS
1.9 TD Eng.160A6.000/ 160D1.000 (66kW)	3/93-		R		**CF135**	Bdx	Ø 20,64	
	90-96		R		**CF130**	Bdx	Ø 22,00	
	90-93		R		**CF079**		Ø 17,50	
	3/93-				**PF042**	Bdx	Ø 22,20	Supplied -Servo, -ABS
	3/90-				**PF132**		Ø 20,64	+ABS
	90-93				**PF006**		Ø 20,64	-ABS
	90-96				**CZ024**		Ø 25,40	
1.9 TD Eng.160B6.046 (59kW)	3/93-		R		**CF135**	Bdx	Ø 20,64	
	92-93		R		**CF079**		Ø 17,50	
	3/93-				**PF042**	Bdx	Ø 22,20	Supplied -Servo, -ABS
	92-				**PF132**		Ø 20,64	+ABS
	92-93				**PF006**		Ø 20,64	-ABS
	92-96				**CZ024**		Ø 25,40	
2.0 i.e., 4WD Eng.159A6.046 (83kW)	90-				**PF042**	Bdx	Ø 22,20	Supplied -Servo, -ABS
	90-				**CZ011**		Ø 25,40	
	90-				**PZ034**		Ø 19,05	SW, 4WD
	90-				**PZ060**		Ø 19,05	
Tipo (160) 7/87-8/96								
1.1 Eng.160A3.000 (41kW)	2/88-91		R		**CF100**		Ø 15,00	
	88-91				**PF132**		Ø 20,64	+ABS
	88-91				**PF006**		Ø 20,64	-ABS
	88-91				**CZ011**		Ø 25,40	
	88-91				**PZ060**		Ø 19,05	
1.4 Eng.160A1.000/ 160A1.048 (52kW)	2/88-89		R		**CF100**		Ø 15,00	
	87-89				**PF132**		Ø 20,64	+ABS
	87-89				**PF006**		Ø 20,64	-ABS
	87-89				**CZ011**		Ø 25,40	
	87-89				**PZ060**		Ø 19,05	
1.4 i.e. Eng.159A2.000 (57kW)	89-95				**PF006**		Ø 20,64	-ABS
1.4 i.e. Eng.160A1.046/ 836A4.000 (51kW)	3/93-		R		**CF130**	Bdx	Ø 22,00	
	89-93		R		**CF100**		Ø 15,00	
	3/93-				**PF042**	Bdx	Ø 22,20	Supplied -Servo, -ABS
	89-93				**PF132**		Ø 20,64	+ABS
	89-93				**PF006**		Ø 20,64	-ABS
	89-93				**CZ011**		Ø 25,40	
	89-93				**PZ060**		Ø 19,05	
1.6 Eng.160A2.000 (61kW)	88-91		R		**CF100**		Ø 15,00	
	88-91		R		**CF079**		Ø 17,50	
	88-91				**PF132**		Ø 20,64	+ABS
	88-91				**PF006**		Ø 20,64	-ABS

FIAT

		Spare Parts	F/R	L/R	FRITECH ref.		DIMENSIONS mm.	NOTE
1.6 Eng.160A2.000 (61kW)	-91				**CZ011**		Ø 25,40	
	-91				**PZ060**		Ø 19,05	
1.6 i.e. Eng.149C2.046 (66kW)	2/88-91		R		**CF100**		Ø 15,00	
	2/88-91		R		**CF079**		Ø 17,50	
	2/88-91				**PF132**		Ø 20,64	+ABS
	2/88-91				**PF006**		Ø 20,64	-ABS
	90-91				**CZ011**		Ø 25,40	
	90-91				**PZ060**		Ø 19,05	
1.6 i.e. Eng.159A3.046 (57kW)	90-93		R		**CF100**		Ø 15,00	
	90-93		R		**CF079**		Ø 17,50	
	90-93				**PF132**		Ø 20,64	+ABS
	90-93				**PF006**		Ø 20,64	-ABS
	90-93				**CZ011**		Ø 25,40	
	90-93				**PZ060**		Ø 19,05	
1.6 i.e. Eng.159A3.048/ 835C1.000 (55kW)	92-		R		**CF135**	Bdx	Ø 20,64	
	92-		R		**CF130**	Bdx	Ø 22,00	
	3/93-				**PF042**	Bdx	Ø 22,20	Supplied -Servo, -ABS
	92-93				**PF132**		Ø 20,64	+ABS
1.7 D Eng.149B4.000 (43-45kW)	3/93-		R		**CF130**	Bdx	Ø 22,00	
	2/88-93		R		**CF101**		Ø 19,05	
	3/93-				**PF042**	Bdx	Ø 22,20	Supplied -Servo, -ABS
	2/88-93				**PF132**		Ø 20,64	+ABS
	2/88-93				**PF006**		Ø 20,64	-ABS
	88-95				**CZ024**		Ø 25,40	
1.8 i.e. Eng.159A4.000 (74kW)	94-				**PF042**	Bdx	Ø 22,20	Supplied -Servo, -ABS
1.8 i.e. Eng.159A4.046 (77-81kW)	3/93-		R		**CF135**	Bdx	Ø 20,64	
	90-93		R		**CF079**		Ø 17,50	
	93-				**PF042**	Bdx	Ø 22,20	Supplied -Servo, -ABS
	90-93				**PF132**		Ø 20,64	+ABS
	90-93				**PF006**		Ø 20,64	-ABS
1.8 i.e. Eng.835C2.000 (76kW)	3/93-		R		**CF135**	Bdx	Ø 20,64	
	3/93-				**PF042**	Bdx	Ø 22,20	Supplied -Servo, -ABS
	93-				**PF132**		Ø 20,64	+ABS
1.8 i.e. Eng.835C4.000 (66kW)	3/93-				**PF042**	Bdx	Ø 22,20	Supplied -Servo, -ABS
1.9 D Eng.160A7.000 (48kW)	91-		R		**CF130**	Bdx	Ø 22,00	
	3/93-				**PF042**	Bdx	Ø 22,20	Supplied -Servo, -ABS
	91-93				**PF132**		Ø 20,64	+ABS
1.9 TD Eng.160A6.000/ 160A6.048/ 160D1.000	3/93-		R		**CF135**	Bdx	Ø 20,64	
(66kW)	90-93		R		**CF079**		Ø 17,50	
	3/93-				**PF042**	Bdx	Ø 22,20	Supplied -Servo, -ABS
	90-93				**PF132**		Ø 20,64	+ABS
	90-93				**PF006**		Ø 20,64	-ABS
	90-95				**CZ024**		Ø 25,40	
1.9 TD Eng.160B6.046 (59kW)	3/93-		R		**CF135**	Bdx	Ø 20,64	
	92-93		R		**CF079**		Ø 17,50	
	3/93-				**PF042**	Bdx	Ø 22,20	Supplied -Servo, -ABS
	92-93				**PF132**		Ø 20,64	+ABS
	92-93				**PF006**		Ø 20,64	-ABS
	92-93				**CZ024**		Ø 25,40	
2.0 16v Eng.160A8.046 (107kW)	3/93-				**PF042**	Bdx	Ø 22,20	Supplied -Servo, -ABS
	91-93				**PF132**		Ø 20,64	+ABS
	91-95				**CZ011**		Ø 25,40	
	91-93				**PZ060**		Ø 19,05	
	93-95				**PZ034**		Ø 19,05	
2.0 16v Eng.836A3.000/ 836A3.001 (102-104kW)	3/93-				**PF042**	Bdx	Ø 22,20	Supplied -Servo, -ABS
	93-				**PF132**		Ø 20,64	+ABS
	93-95				**CZ011**		Ø 25,40	
	93-95				**PZ034**		Ø 19,05	
2.0 i.e. Eng.159A5.046 (80kW)	90-92				**PF132**		Ø 20,64	+ABS
	90-92				**PF006**		Ø 20,64	-ABS
	90-92				**CZ011**		Ø 25,40	
	90-92				**PZ060**		Ø 19,05	
2.0 i.e., 4WD Eng.159A6.046 (83kW)	90-95				**PF132**		Ø 20,64	+ABS
	90-95				**PF006**		Ø 20,64	-ABS

		Spare Parts	F/R	L/R	FRITECH ref.		DIMENSIONS mm.	NOTE
2.0 i.e., 4WD Eng.159A6.046 (83kW)	90-95				**CZ011**		Ø 25,40	
	90-95				**PZ060**		Ø 19,05	
Tipo II (356) 1/16-								
1.3 MJT (70kW)	16-		R		**CF1019**	Loc	Ø 20,64	Alu
1.4, SW Eng.843A1.000 (70kW)	16-		R		**CF1019**	Loc	Ø 20,64	Alu, Only 4p
1.6 (81kW)	16-		R		**CF1019**	Loc	Ø 20,64	Alu
1.6 MJT, SW Eng.940C1.000 (88kW)	16-		R		**CF1019**	Loc	Ø 20,64	Alu
Ulysse I (220) 6/94-8/02								
1.8 Eng.LFW (73kW)	97-		R		**CF094**		Ø 19,05	
	97-				**PF217**		Ø 23,81	+ABS
	97-				**PF218**		Ø 23,81	-ABS
1.9 TD Eng.DHX(XUD9TF-L) (66-68kW)	95-		R		**CF094**		Ø 19,05	
	5/99-8/02				**PF464**	Bch	Ø 23,81	+ABS
	5/99-8/02				**PF429**	Bch	Ø 23,81	-ABS
	95-4/99				**PF217**		Ø 23,81	+ABS
	95-4/99				**PF218**		Ø 23,81	-ABS
2.0 Eng.RFU(XU10J2C) (89kW)	6/94-		R		**CF094**		Ø 19,05	
	5/99-8/02				**PF464**	Bch	Ø 23,81	+ABS
	5/99-8/02				**PF429**	Bch	Ø 23,81	-ABS
	6/94-				**PF217**		Ø 23,81	+ABS
	6/94-				**PF218**		Ø 23,81	-ABS
2.0 16v Eng.RFN(EW10J4) (100kW)	00-		R		**CF094**		Ø 19,05	-ABS
	00-				**PF464**	Bch	Ø 23,81	+ABS
	00-				**PF429**	Bch	Ø 23,81	-ABS
	02-				**CZ103**	Fte	Ø 19,05	Pla
2.0 16v Eng.RFV(XU10J4R) (97kW)	98-		R		**CF094**		Ø 19,05	
	5/99-00				**PF464**	Bch	Ø 23,81	+ABS
	5/99-00				**PF429**	Bch	Ø 23,81	-ABS
	98-4/99				**PF217**		Ø 23,81	+ABS
	98-4/99				**PF218**		Ø 23,81	-ABS
2.0 JTD Eng.RHW(DW10ATED4) (81kW)	00-02		R		**CF094**		Ø 19,05	-ABS
	00-02				**PF429**	Bch	Ø 23,81	-ABS
2.0 JTD Eng.RHZ(DW10ATED) (80kW)	99-		R		**CF094**		Ø 19,05	-ABS
	99-				**PF464**	Bch	Ø 23,81	+ABS
	10/99-8/02				**PZ130**	Fte	Ø 19,05	Alu
2.0 T. Eng.RGX(XU10J2CTE) (108kW)	6/94-		R		**CF094**		Ø 19,05	-ABS
	5/99-8/02				**PF464**	Bch	Ø 23,81	+ABS
	5/99-8/02				**PF429**	Bch	Ø 23,81	-ABS
	6/94-4/99				**PF217**		Ø 23,81	+ABS
	6/94-4/99				**PF218**		Ø 23,81	-ABS
2.1 TD Eng.P8C (80kW)	96-99		R		**CF094**		Ø 19,05	-ABS
	5/99-10/99				**PF464**	Bch	Ø 23,81	+ABS
	5/99-10/99				**PF429**	Bch	Ø 23,81	-ABS
	96-4/99				**PF217**		Ø 23,81	+ABS
	96-4/99				**PF218**		Ø 23,81	-ABS
Ulysse II (179AX) 8/02-12/10								
2.0 Eng.RFN(EW10J4) (100kW)	8/02-				**PZ130**	Fte	Ø 19,05	Alu
2.0 JTD Eng.RHM(DW10ATED4) (79kW)	03-				**PZ130**	Fte	Ø 19,05	Alu
2.0 JTD Eng.RHW(DW10ATED4) (80kW)	8/02-				**PZ130**	Fte	Ø 19,05	Alu
2.2 JTD Eng.4HW(DW12ATED4) (94kW)	8/02-				**PZ130**	Fte	Ø 19,05	Alu
Uno (146A/E) 1/83-12/10								
0.9 Eng.146A.000/ 146A1.000 (33kW)	1/83-9/89		R		**CF004**		Ø 19,05	
	1/86-9/89				**PF009**	Loc	Ø 20,64	
	1/83-6/83				**PF017**		Ø 19,05	-Servo
	7/83-85				**PF018**		Ø 19,05	
	83-				**CT006**	Bdx/Ate	Ø 25,40	Alu
1.0 45 Eng.156A2.100/ 156A2.048 (32kW)	86-9/89		R		**CF004**		Ø 19,05	
	1/86-9/89				**PF009**	Loc	Ø 20,64	
	86-				**CT006**	Bdx/Ate	Ø 25,40	Alu
1.0 45 i.e. Eng.156A2.246 (33kW)	84-		R		**CF004**		Ø 19,05	
	1/86-9/89				**PF009**	Loc	Ø 20,64	
	84-85				**PF018**		Ø 19,05	
	89-12/92				**PF203**		Ø 22,20	
	84-				**CT006**	Bdx/Ate	Ø 25,40	Alu

FIAT

		Spare Parts	F/R	L/R	FRITECH ref.		DIMENSIONS mm.	NOTE
1.0 45 i.e. Eng.156A2.246 (33kW)	84-				**CZ011**		Ø 25,40	RHD
	84-				**PZ015**		Ø 19,05	RHD
1.0 55 Eng.146B4.000 (41kW)	94-		R		**CF004**		Ø 19,05	
	94-				**PF009**	Loc	Ø 20,64	LHD
1.1 Eng.146A4.044 (43kW)	-9/89		R		**CF004**		Ø 19,05	
	1/86-9/89				**PF009**	Loc	Ø 20,64	
	-6/83				**PF053**		Ø 19,05	+Servo
	7/83-85				**PF018**		Ø 19,05	
	83-				**CT006**	Bdx/Ate	Ø 25,40	Alu
1.1 Eng.156C.046 (37kW)	90-93		R		**CF004**		Ø 19,05	
	90-93				**PF009**	Loc	Ø 20,64	
	90-				**CT006**	Bdx/Ate	Ø 25,40	Alu
1.1 55 Eng.138B.000 (40kW)	-9/89		R		**CF004**		Ø 19,05	
	1/86-9/89				**PF009**	Loc	Ø 20,64	
	-6/83				**PF053**		Ø 19,05	+Servo
	7/83-85				**PF018**		Ø 19,05	
	83-				**CT006**	Bdx/Ate	Ø 25,40	Alu
1.1 60 Eng.146A4.048 (43kW)	-9/89		R		**CF004**		Ø 19,05	
	1/86-9/89				**PF009**	Loc	Ø 20,64	
	-6/83				**PF053**		Ø 19,05	+Servo
	7/83-85				**PF018**		Ø 19,05	
	83-				**CT006**	Bdx/Ate	Ø 25,40	Alu
1.1 CS Brasile Eng.M201GA11A (40kW)	1/86-9/89		R		**CF004**		Ø 19,05	
	88-93		R		**CF216**		Ø 19,05	
	88-93				**PF086**	Ate	Ø 19,05	
	88-93				**PF023**	Ate	Ø 20,64	
	88-93				**PF187**	Bdx	Ø 20,64	
	1/86-9/89				**PF009**	Loc	Ø 20,64	
	83-				**CT006**	Bdx/Ate	Ø 25,40	Alu
1.1i.e. 50 Eng.146C3.000 (36kW)	92-93		R		**CF004**		Ø 19,05	
	92-93				**PF009**	Loc	Ø 20,64	
1.3 70 Eng.138B2.000 (50kW)	83-85		R		**CF004**		Ø 19,05	
	1/83-6/83				**PF053**		Ø 19,05	+Servo
	7/83-85				**PF018**		Ø 19,05	
	83-				**CT006**	Bdx/Ate	Ø 25,40	Alu
1.3 70 Eng.149A7.000 (48kW)	85-89		R		**CF004**		Ø 19,05	
	85-89				**PF009**	Loc	Ø 20,64	
	-85				**PF018**		Ø 19,05	
	85-89				**CT006**	Bdx/Ate	Ø 25,40	Alu
1.3 D Eng.127A5.000/ 146B1.000 (27-33kW)	83-		R		**CF004**		Ø 19,05	
	1/86-9/89				**PF009**	Loc	Ø 20,64	
	93-				**PF009**	Loc	Ø 20,64	
	6/83-				**PF053**		Ø 19,05	+Servo
	7/83-85				**PF018**		Ø 19,05	
	89-12/92				**PF203**		Ø 22,20	
	83-				**CT006**	Bdx/Ate	Ø 25,40	Alu
	83-				**CZ011**		Ø 25,40	RHD
	83-				**PZ015**		Ø 19,05	RHD
1.3 T. i.e. Eng.146A2.000 (77kW)	85-89		R		**CF004**		Ø 19,05	
	85-89				**PF009**	Loc	Ø 20,64	
	85-89				**PF203**		Ø 22,20	
	85-				**CT006**	Bdx/Ate	Ø 25,40	Alu
1.3 T. i.e. Eng.146A2.146 (73kW)	1/87-12/87		R		**CF004**		Ø 19,05	
	1/87-12/87				**PF009**	Loc	Ø 20,64	
	87-				**CT006**	Bdx/Ate	Ø 25,40	Alu
1.3 T. i.e. Eng.146A2.246 (74kW)	89-91		R		**CF004**		Ø 19,05	
	89-91				**PF009**	Loc	Ø 20,64	
	89-91				**PF203**		Ø 22,20	
	89-				**CT006**	Bdx/Ate	Ø 25,40	Alu
1.4 70 S Eng.160A1.048 (52kW)	89-		R		**CF004**		Ø 19,05	
	89-12/92				**PF203**		Ø 22,20	
	89-				**CZ011**		Ø 25,40	RHD
	89-				**PZ015**		Ø 19,05	RHD

		Spare Parts	F/R	L/R	FRITECH ref.		DIMENSIONS mm.	NOTE
1.4 i.e. Eng.159A2.000 (57kW)	89-		R		**CF004**		Ø 19,05	
	89-12/92				**PF203**		Ø 22,20	
	89-				**CZ011**		Ø 25,40	RHD
	89-				**PZ015**		Ø 19,05	RHD
1.4 i.e. Eng.160A1.046 (51kW)	89-		R		**CF004**		Ø 19,05	
	89-12/92				**PF203**		Ø 22,20	
	89-				**CZ011**		Ø 25,40	RHD
	89-				**PZ015**		Ø 19,05	RHD
1.4 T. i.e. Eng.146A8.000 (87kW)	89-96				**PF203**		Ø 22,20	LHD/RHD
1.4 T. i.e. Eng.146A8.046 (82kW)	89-93				**PF203**		Ø 22,20	LHD/RHD
1.4 TD 70 Eng.146B.000/ 146B3.000 (52kW)	86-90		R		**CF004**		Ø 19,05	
	86-90				**PF009**	Loc	Ø 20,64	LHD
	86-90				**PF203**		Ø 22,20	RHD
	89-				**CZ011**		Ø 25,40	RHD
	89-				**PZ015**		Ø 19,05	RHD
1.5 i.e. 75 Eng.138C2.048/ 149C1.000 (55kW)	85-93		R		**CF004**		Ø 19,05	
	85-93				**PF009**	Loc	Ø 20,64	LHD
	85-93				**PF203**		Ø 22,20	M/T, RHD
1.7 D Eng.146B2.000 (42kW)	89-93		R		**CF004**		Ø 19,05	
	89-93				**PF009**	Loc	Ø 20,64	LHD
	89-93				**PF203**		Ø 22,20	RHD
	89-				**CZ011**		Ø 25,40	RHD
	89-				**PZ015**		Ø 19,05	RHD
1.7 D Eng.149B3.000 (44kW)	86-89		R		**CF004**		Ø 19,05	
	86-89				**PF009**	Loc	Ø 20,64	
	86-89				**CT006**	Bdx/Ate	Ø 25,40	Alu
1.9 D Eng.149B5.046 (44kW)	89-94		R		**CF004**		Ø 19,05	
	89-94				**PF009**	Loc	Ø 20,64	LHD
	89-94				**PF203**		Ø 22,20	RHD
	89-				**CZ011**		Ø 25,40	RHD
	89-				**PZ015**		Ø 19,05	RHD
X 1/9 (128 AS) 5/73-12/89								
1.3, Exclusiv Serie Eng.128AS.000 (55kW)	73-				**PF048**		Ø 19,05	Ch -73547
	73-79				**PZ004**		Ø 19,05	
1.5 Five Speed Eng.138AS.000 (63kW)	78-				**PF048**		Ø 19,05	Ch -73547
	78-89				**PZ004**		Ø 19,05	
1.5 Five Speed Eng.138BS.031 (56kW)	85-				**PF048**		Ø 19,05	Ch -73547
	85-89				**PZ004**		Ø 19,05	

FIAT LCV

238-Serie 9/66-6/82								
1.4 Eng.131AZ.000 (34kW)	66-		F		**CF594**		Ø 28,57	
	66-		R		**CF487**		Ø 22,20	
					PF016		Ø 19,05	
	66-				**CT003**		Ø 25,40	Alu
1.4 Eng.131AZ.000/ 131BZ.0C0/ 131FZ (38kW)	76-		F		**CF594**		Ø 28,57	
	76-		R		**CF487**		Ø 22,20	
					PF016		Ø 19,05	
	76-				**CT003**		Ø 25,40	Alu
241-Serie 1/67-12/79								
1.4 T. Eng.124AZ2 (38kW)	67-		F		**CF594**		Ø 28,57	
	67-		R		**CF330**		Ø 28,57	
	67-				**CT001**	Benditalia	Ø 25,40	Alu
					CZ005		Ø 19,05	Alu
					CZ101		Ø 19,05	
1.9 D Eng.237A (35kW)	67-		F		**CF594**		Ø 28,57	
	67-		R		**CF330**		Ø 28,57	
	67-				**CT001**	Benditalia	Ø 25,40	Alu
					CZ005		Ø 19,05	Alu
					CZ101		Ø 19,05	
242-Serie Van 10/75-7/82								
1.6, Bus Eng.124B3.000 (46kW)					**CZ005**		Ø 19,05	Alu
					CZ101		Ø 19,05	
					PZ010		Ø 19,05	Alu

FIAT LCV

		Spare Parts	F/R	L/R	FRITECH ref.		DIMENSIONS mm.	NOTE
1.6, Bus Eng.124B3.000 (46kW)					**PZ111**		Ø 19,05	
2.0 Eng.132AZ2.000 (51kW)					**CZ005**		Ø 19,05	Alu
					CZ101		Ø 19,05	
					PZ010		Ø 19,05	Alu
					PZ111		Ø 19,05	
2.2 D Eng.B22.615 (46kW)					**CZ005**		Ø 19,05	Alu
					CZ101		Ø 19,05	
					PZ010		Ø 19,05	Alu
					PZ111		Ø 19,05	
2.5 D Eng.B25.637 (52kW)					**CZ005**		Ø 19,05	Alu
					CZ101		Ø 19,05	
					PZ010		Ø 19,05	Alu
					PZ111		Ø 19,05	
Bravo Van 4/07-12/14								
1.6 JTD Eng.198A3.000 (77kW)	07-				**PF847**	Bch	Ø 23,81	Alu, M/T
Cinquecento Van 1/92-1/98								
0.9 i Eng.A1.046 (29kW)	3/92-		R		**CF004**		Ø 19,05	
	3/92-				**PF034**		Ø 19,05	
Doblo Cargo I-II (223) 3/01-12/09								
1.2 Eng.223A5.000 (48kW)	01-05		R		**CF327**	Ate	Ø 20,64	
	01-1/02				**PF264**		Ø 22,20	+ABS
	01-1/02				**PF263**		Ø 22,20	-ABS
1.2 16v Eng.223A3.011 (59kW)	05-		R		**CF327**	Ate	Ø 20,64	
	05-				**PF264**		Ø 22,20	+ABS
	05-				**PF263**		Ø 22,20	-ABS
1.3 JTD Eng.188A9.000 (51kW)	04-		R		**CF327**	Ate	Ø 20,64	
	04-				**PF264**		Ø 22,20	+ABS
	04-				**PF263**		Ø 22,20	-ABS
	04-09				**PZ090**	Valeo	Ø 15,87	
1.3 MJT 16v Eng.199A2.000 (55kW)	05-		R		**CF827**	Loc	Ø 20,64	Alu
	05-				**PF847**	Bch	Ø 23,81	Alu, +ABS
	05-				**PF844**	Bch	Ø 23,81	Alu, -ABS
	05-09				**PZ090**	Valeo	Ø 15,87	
1.3 MTJ (Germany) Eng.223A9.000 (62kW)	05-		R		**CF827**	Loc	Ø 20,64	Alu
	05-				**PF847**	Bch	Ø 23,81	Alu, +ABS
	05-				**PF844**	Bch	Ø 23,81	Alu, -ABS
	05-09				**PZ090**	Valeo	Ø 15,87	
1.4 Eng.350A1.000 (57kW)	05-		R		**CF827**	Loc	Ø 20,64	Alu
	05-				**PF843**	Bch	Ø 22,20	Alu, +ABS
	05-08				**PF842**	Bch	Ø 22,20	Alu, -ABS
	05-09				**PZ090**	Valeo	Ø 15,87	
1.6 16v Eng.182B6.000 (76kW)	01-		R		**CF327**	Ate	Ø 20,64	
	05-				**PF843**	Bch	Ø 22,20	Alu, +ABS
	05-08				**PF842**	Bch	Ø 22,20	Alu, -ABS
	01-1/02				**PF264**		Ø 22,20	+ABS
	01-1/02				**PF263**		Ø 22,20	-ABS
	01-09				**PZ090**	Valeo	Ø 15,87	
1.6 natural power Eng.182B6.000 (76kW)	02-		R		**CF827**	Loc	Ø 20,64	Alu
	05-				**PF843**	Bch	Ø 22,20	Alu, +ABS
	05-08				**PF842**	Bch	Ø 22,20	Alu, -ABS
	02-09				**PZ090**	Valeo	Ø 15,87	
1.9 D Eng.223A6.000 (46kW)	01-05		R		**CF327**	Ate	Ø 20,64	
	01-1/02				**PF264**		Ø 22,20	+ABS
	01-1/02				**PF263**		Ø 22,20	-ABS
	01-05				**PZ090**	Valeo	Ø 15,87	
1.9 JTD Eng.182B9.000 (74kW)	01-05		R		**CF327**	Ate	Ø 20,64	
	01-1/02				**PF264**		Ø 22,20	+ABS
	01-1/02				**PF263**		Ø 22,20	-ABS
	01-05				**PZ090**	Valeo	Ø 15,87	
1.9 JTD Eng.223A7.000 (77kW)	03-05		R		**CF327**	Ate	Ø 20,64	
	03-05				**PF264**		Ø 22,20	+ABS
	03-05				**PF263**		Ø 22,20	-ABS
	03-05				**PZ090**	Valeo	Ø 15,87	

		Spare Parts	F/R	L/R	FRITECH ref.		DIMENSIONS mm.	NOTE
1.9 MJT Eng.186A9.000 (88kW)	05-		R		**CF827**	Loc	Ø 20,64	Alu
	05-				**PF847**	Bch	Ø 23,81	Alu, +ABS
	05-				**PF844**	Bch	Ø 23,81	Alu, -ABS
	05-09				**PZ090**	Valeo	Ø 15,87	
1.9 MJT Eng.223B1.000 (77kW)	05-		R		**CF827**	Loc	Ø 20,64	Alu
	05-				**PF847**	Bch	Ø 23,81	Alu, +ABS
	05-				**PF844**	Bch	Ø 23,81	Alu, -ABS
	05-09				**PZ090**	Valeo	Ø 15,87	
Doblo Cargo III (263) 2/10-								
1.3 D MJT Eng.263A2.000 (55kW)	13-		R		**CF865**	Loc	Ø 25,40	Alu
	13-				**PF913**	Bch	Ø 23,81	Alu, +ABS, +ESP
	13-				**PF912**	Bch	Ø 23,81	Alu, +ABS, -ESP
	13-				**PF914**	Bch	Ø 23,81	Alu, -ABS, -ESP
1.3 MJT Eng.263A2.000 (66kW)	10-		R		**CF865**	Loc	Ø 25,40	Alu
	10-				**PF913**	Bch	Ø 23,81	Alu, +ABS, +ESP, M/T
	10-				**PF912**	Bch	Ø 23,81	Alu, +ABS, -ESP, M/T
	10-				**PF914**	Bch	Ø 23,81	Alu, -ABS
1.4, 16v Eng.198A4.000 (88kW)	10-		R		**CF865**	Loc	Ø 25,40	Alu
	10-				**PF913**	Bch	Ø 23,81	Alu, +ABS, +ESP, M/T
	10-				**PF912**	Bch	Ø 23,81	Alu, +ABS, -ESP, M/T
	10-				**PF914**	Bch	Ø 23,81	Alu, -ABS
1.4, 16v Eng.843A1.000 (70kW)	10-		R		**CF865**	Loc	Ø 25,40	Alu
	10-				**PF913**	Bch	Ø 23,81	Alu, +ABS, +ESP, M/T
	10-				**PF912**	Bch	Ø 23,81	Alu, +ABS, -ESP, M/T
	10-				**PF914**	Bch	Ø 23,81	Alu, -ABS
1.6 D MJ Eng.263A3.000 (74kW)	11-		R		**CF865**	Loc	Ø 25,40	Alu
	11-				**PF913**	Bch	Ø 23,81	Alu, +ABS, +ESP, M/T
	11-				**PF912**	Bch	Ø 23,81	Alu, +ABS, -ESP, M/T
	11-				**PF914**	Bch	Ø 23,81	Alu, -ABS
1.6 D MJT Eng.263A4.000 (66kW)	10-		R		**CF865**	Loc	Ø 25,40	Alu
	10-				**PF913**	Bch	Ø 23,81	Alu, +ABS, +ESP
	10-				**PF912**	Bch	Ø 23,81	Alu, +ABS, -ESP
1.6 D MJT Eng.263A7.000 (70kW)	15-		R		**CF865**	Loc	Ø 25,40	Alu
	15-				**PF912**	Bch	Ø 23,81	Alu, +ABS, -ESP, M/T+A/T
	15-				**PF913**	Bch	Ø 23,81	Alu, -ABS, +ESP, +TC, M/T+A/T
	15-				**PF914**	Bch	Ø 23,81	Alu, -ABS, -TC, M/T
1.6 D MJT Eng.940C1.000 (88kW)	15-		R		**CF865**	Loc	Ø 25,40	Alu
	15-				**PF912**	Bch	Ø 23,81	Alu, +ABS, -ESP, M/T+A/T
	15-				**PF913**	Bch	Ø 23,81	Alu, -ABS, +ESP, +TC, M/T+A/T
	15-				**PF914**	Bch	Ø 23,81	Alu, -ABS, -TC, M/T
1.6 MJTD Eng.198A3.000 (77kW)	10-		R		**CF865**	Loc	Ø 25,40	Alu
	10-				**PF913**	Bch	Ø 23,81	Alu, +ABS, +ESP, M/T
	10-				**PF912**	Bch	Ø 23,81	Alu, +ABS, -ESP, M/T
	10-				**PF914**	Bch	Ø 23,81	Alu, -ABS
2.0 MJT Eng.263A1.000 (99kW)	10-		R		**CF865**	Loc	Ø 25,40	Alu
	10-				**PF913**	Bch	Ø 23,81	Alu, +ABS, +ESP, M/T
	10-				**PF912**	Bch	Ø 23,81	Alu, +ABS, -ESP, M/T
	10-				**PF914**	Bch	Ø 23,81	Alu, -ABS
Ducato I (280) 1/82-8/90								
1.8 Eng.169B(XM7T) (49-51kW)	82-85		R		**CF270**	Luc	Ø 22,22	Exc. 18Q
	85-88		R		**CF157**	Luc	Ø 25,40	Exc. 18Q
	85-88		R		**CF210**		Ø 26,99	18Q
	11/81-88				**PF031**		Ø 22,20	Exc. 18Q
	85-88				**PF029**		Ø 25,40	18Q
	1/83-88				**CT011**		Ø 25,40	Alu, Exc. 18Q
	82-12/82				**CT012**		Ø 25,40	Alu, Exc. 18Q
1.9 D Eng.149B1.000 (52kW)	87-90		R		**CF157**	Luc	Ø 25,40	Exc. 18Q
	87-90		R		**CF210**		Ø 26,99	18Q
	87-90				**PF031**		Ø 22,20	Exc. 18Q
	87-90				**PF029**		Ø 25,40	18Q
	87-90				**CT011**		Ø 25,40	Alu, Exc. 18Q
1.9 TD Eng.280A1.000 (60kW)	89-90		R		**CF157**	Luc	Ø 25,40	Exc. 18Q
	89-90		R		**CF210**		Ø 26,99	18Q
	89-90				**PF031**		Ø 22,20	Exc. 18Q

FIAT LCV

		Spare Parts	F/R	L/R	FRITECH ref.		DIMENSIONS mm.	NOTE
1.9 TD Eng.280A1.000 (60kW)	89-90				**PF029**		Ø 25,40	18Q
	89-90				**CT011**		Ø 25,40	Alu, Exc. 18Q
2.0 Eng.170B (55kW)	86-90		R		**CF157**	Luc	Ø 25,40	Exc. 18Q
	86-90		R		**CF210**		Ø 26,99	18Q
	86-90				**PF031**		Ø 22,20	Exc. 18Q
	86-90				**PF029**		Ø 25,40	18Q
	86-90				**CT011**		Ø 25,40	Alu, Exc. 18Q
2.0 Eng.170D (62kW)	88-90		R		**CF157**	Luc	Ø 25,40	Exc. 18Q
	88-90		R		**CF210**		Ø 26,99	18Q
	88-90				**PF031**		Ø 22,20	Exc. 18Q
	88-90				**PF029**		Ø 25,40	18Q
	88-90				**CT011**		Ø 25,40	Alu, Exc. 18Q
2.0 Eng.XN1T (58kW)	82-85		R		**CF270**	Luc	Ø 22,22	Exc. 18Q
	82-90		R		**CF157**	Luc	Ø 25,40	Exc. 18Q
	85-90		R		**CF210**		Ø 26,99	18Q
	82-90				**PF031**		Ø 22,20	Exc. 18Q
	82-90				**PF029**		Ø 25,40	18Q
	1/83-90				**CT011**		Ø 25,40	Alu, Exc. 18Q
	82-12/82				**CT012**		Ø 25,40	Alu, Exc. 18Q
2.4 D Eng.8144.61 (53kW)	82-85		R		**CF270**	Luc	Ø 22,22	Exc. 18Q
	82-90		R		**CF157**	Luc	Ø 25,40	Exc. 18Q
	85-90		R		**CF210**		Ø 26,99	18Q
	82-90				**PF031**		Ø 22,20	Exc. 18Q
	82-90				**PF029**		Ø 25,40	18Q
	1/83-90				**CT011**		Ø 25,40	Alu, Exc. 18Q
	-12/82				**CT012**		Ø 25,40	Alu, Exc. 18Q
2.5 CRD Eng.CRD93L(U25-661) (55kW)	82-85		R		**CF270**	Luc	Ø 22,22	Exc. 18Q
	82-90		R		**CF157**	Luc	Ø 25,40	Exc. 18Q
	85-90		R		**CF210**		Ø 26,99	18Q
	82-90				**PF031**		Ø 22,20	Exc. 18Q
	82-90				**PF029**		Ø 25,40	18Q
	1/83-90				**CT011**		Ø 25,40	Alu, Exc. 18Q
	-12/82				**CT012**		Ø 25,40	Alu, Exc. 18Q
2.5 D, 4WD Eng.8144.67 (55kW)	82-85		R		**CF270**	Luc	Ø 22,22	Exc. 18Q
	82-90		R		**CF157**	Luc	Ø 25,40	Exc. 18Q
	85-90		R		**CF210**		Ø 26,99	18Q
	82-90				**PF031**		Ø 22,20	Exc. 18Q
	82-90				**PF029**		Ø 25,40	18Q
	1/83-90				**CT011**		Ø 25,40	Alu, Exc. 18Q
	-12/82				**CT012**		Ø 25,40	Alu, Exc. 18Q
2.5 TD, 4WD Eng.8144.21 (68kW)	86-90		R		**CF157**	Luc	Ø 25,40	Exc. 18Q
	86-90		R		**CF210**		Ø 26,99	18Q
	86-90				**PF031**		Ø 22,20	Exc. 18Q
	86-90				**PF029**		Ø 25,40	18Q
	86-90				**CT011**		Ø 25,40	Alu, Exc. 18Q
Ducato II (290) 3/89-3/94								
1.9 D Eng.149B1.000 (52kW)	90-94		R		**CF157**	Luc	Ø 25,40	Exc. 18Q
	90-94		R		**CF210**		Ø 26,99	18Q
	90-94				**PF031**		Ø 22,20	Exc. 18Q
	90-94				**PF029**		Ø 25,40	18Q
	90-94				**CT011**		Ø 25,40	Alu, Exc. 18Q
1.9 TD Eng.280A1.000 (60kW)	89-94		R		**CF157**	Luc	Ø 25,40	Exc. 18Q
	89-94		R		**CF210**		Ø 26,99	18Q
	89-94				**PF031**		Ø 22,20	Exc. 18Q
	89-94				**PF029**		Ø 25,40	18Q
	89-94				**CT011**		Ø 25,40	Alu, Exc. 18Q
2.0 Eng.170D (62kW)	90-94		R		**CF157**	Luc	Ø 25,40	Exc. 18Q
	90-94		R		**CF210**		Ø 26,99	18Q
	90-94				**PF031**		Ø 22,20	Exc. 18Q
	90-94				**PF029**		Ø 25,40	18Q
	90-94				**CT011**		Ø 25,40	Alu, Exc. 18Q
2.0 4WD Eng.170D (63kW)	90-94		R		**CF157**	Luc	Ø 25,40	Exc. 18Q
	90-94		R		**CF210**		Ø 26,99	18Q
	90-94				**PF031**		Ø 22,20	Exc. 18Q

		Spare Parts	F/R	L/R	FRITECH ref.		DIMENSIONS mm.	NOTE
2.0 4WD Eng.170D (63kW)	90-94				**PF029**		Ø 25,40	18Q
	90-94				**CT011**		Ø 25,40	Alu, Exc. 18Q
2.5 D, 4WD Eng.8144.67 (55kW)	90-94		R		**CF157**	Luc	Ø 25,40	Exc. 18Q
	90-94		R		**CF210**		Ø 26,99	18Q
	90-94				**PF031**		Ø 22,20	Exc. 18Q
	90-94				**PF029**		Ø 25,40	18Q
	90-94				**CT011**		Ø 25,40	Alu, Exc. 18Q
2.5 TD, 4WD Eng.8140.27 (70kW)	90-94		R		**CF157**	Luc	Ø 25,40	Exc. 18Q
	90-94		R		**CF210**		Ø 26,99	18Q
	90-94				**PF031**		Ø 22,20	Exc. 18Q
	90-94				**PF029**		Ø 25,40	18Q
	90-94				**CT011**		Ø 25,40	Alu, Exc. 18Q
Ducato III (230) 3/94-4/02								
1.9 D Eng.230A2.000 (51kW)	2/94-		R		**CF181**		Ø 25,40	10-14Q
	2/94-12/94				**PF207**		Ø 22,20	10-14Q, +ABS
	1/95-				**PF206**		Ø 23,81	10-14Q, +ABS
	2/94-12/94				**PF210**		Ø 22,20	10-14Q, -ABS
	1/95-				**PF209**		Ø 23,81	10-14Q, -ABS
	94-10/01				**CT016**		Ø 25,40	Alu, Rear Disc Brake, 10Q, -ABS
	94-				**PZ144**	Valeo	Ø 15,87	
1.9 D Eng.D9B/ DJY (50kW)	98-02		R		**CF182**	Loc	Ø 27,00	10-14Q
	98-02		R		**CF181**		Ø 25,40	10Q Panorama, ambulanza
	98-02		R		**CF183**		Ø 28,60	18Q
	98-02				**PF206**		Ø 23,81	10-14Q, +ABS
	98-02				**PF209**		Ø 23,81	10-14Q, -ABS
	99-10/01				**CT016**		Ø 25,40	Alu, Rear Disc Brake, 10Q, -ABS
	98-				**PZ144**	Valeo	Ø 15,87	
1.9 D Eng.DHX (59kW)	98-10/01				**CT016**		Ø 25,40	Alu, Rear Disc Brake, 10Q, -ABS
1.9 TD Eng.230A4.000 (59kW)	2/94-		R		**CF181**		Ø 25,40	10-14Q
	2/94-12/94				**PF207**		Ø 22,20	10-14Q, +ABS
	1/95-				**PF206**		Ø 23,81	10-14Q, +ABS
	2/94-12/94				**PF210**		Ø 22,20	10-14Q, -ABS
	1/95-				**PF209**		Ø 23,81	10-14Q, -ABS
	94-10/01				**CT016**		Ø 25,40	Alu, Rear Disc Brake, 10Q, -ABS
	94-				**PZ144**	Valeo	Ø 15,87	
1.9 TD Eng.DHX(XUD9TF-L) (66kW)	98-02		R		**CF182**	Loc	Ø 27,00	10-14Q
	98-02		R		**CF181**		Ø 25,40	10Q Panorama, ambulanza
	98-02		R		**CF183**		Ø 28,60	18Q
	98-02				**PF206**		Ø 23,81	10-14Q, +ABS
	98-02				**PF205**		Ø 25,40	18Q, +ABS
	98-02				**PF209**		Ø 23,81	10-14Q, -ABS
	98-02				**PF208**		Ø 25,40	18Q, -ABS
	98-10/01				**CT016**		Ø 25,40	Alu, Rear Disc Brake, 10Q, -ABS
	98-				**PZ144**	Valeo	Ø 15,87	
1.9 TD Panorama Eng.230A3.000 (60kW)	2/94-		R		**CF181**		Ø 25,40	10-14Q
	2/94-12/94				**PF207**		Ø 22,20	10-14Q, +ABS
	1/95-				**PF206**		Ø 23,81	10-14Q, +ABS
	2/94-12/94				**PF210**		Ø 22,20	10-14Q, -ABS
	1/95-				**PF209**		Ø 23,81	10-14Q, -ABS
	94-10/01				**CT016**		Ø 25,40	Alu, Rear Disc Brake, 10Q, -ABS
	94-				**PZ144**	Valeo	Ø 15,87	
2.0 (74kW)	94-				**PZ144**	Valeo	Ø 15,87	
2.0 JTD Eng.RHV(DW10) (62kW)	01-02		R		**CF182**	Loc	Ø 27,00	10-14Q
	01-02		R		**CF181**		Ø 25,40	10Q Panorama, ambulanza
	01-02		R		**CF183**		Ø 28,60	18Q
	01-02				**PF526**	Bch	Ø 25,40	
	01-				**PZ144**	Valeo	Ø 15,87	
2.0i, 4WD Eng.RFW(XU10J2/ C) (80kW)	2/94-		R		**CF181**		Ø 25,40	10-14Q
	2/94-		R		**CF183**		Ø 28,60	18Q
	2/94-12/94				**PF207**		Ø 22,20	10-14Q, +ABS
	1/95-				**PF206**		Ø 23,81	10-14Q, +ABS
	2/94-				**PF205**		Ø 25,40	18Q, +ABS
	2/94-12/94				**PF210**		Ø 22,20	10-14Q, -ABS
	1/95-				**PF209**		Ø 23,81	10-14Q, -ABS

FIAT LCV

		Spare Parts	F/R	L/R	FRITECH ref.		DIMENSIONS mm.	NOTE
2.0i, 4WD Eng.RFW(XU10J2/ C) (80kW)	2/94-				**PF208**		Ø 25,40	18Q, -ABS
	94-10/01				**CT016**		Ø 25,40	Alu, Rear Disc Brake, 10-14-18Q, -ABS
	94-				**PZ144**	Valeo	Ø 15,87	
2.5 D, 4WD Eng.8140.67 (62kW)	2/94-		R		**CF181**		Ø 25,40	10-14Q
	2/94-		R		**CF183**		Ø 28,60	18Q
	2/94-12/94				**PF207**		Ø 22,20	10-14Q, +ABS
	1/95-				**PF206**		Ø 23,81	10-14Q, +ABS
	2/94-				**PF205**		Ø 25,40	18Q, +ABS
	2/94-12/94				**PF210**		Ø 22,20	10-14Q, -ABS
	1/95-				**PF209**		Ø 23,81	10-14Q, -ABS
	2/94-				**PF208**		Ø 25,40	18Q, -ABS
	94-10/01				**CT016**		Ø 25,40	Alu, Rear Disc Brake, 14-18Q, -ABS
	94-				**PZ144**	Valeo	Ø 15,87	
2.5 TD, 4WD Eng.8140.47 (85kW)	94-98		R		**CF182**	Loc	Ø 27,00	10-14Q
	94-98		R		**CF181**		Ø 25,40	10Q Panorama, ambulanza
	94-98		R		**CF183**		Ø 28,60	18Q
	2/94-12/94				**PF207**		Ø 22,20	10-14Q, +ABS
	1/95-				**PF206**		Ø 23,81	10-14Q, +ABS
	2/94-				**PF205**		Ø 25,40	18Q, +ABS
	2/94-12/94				**PF210**		Ø 22,20	10-14Q, -ABS
	1/95-				**PF209**		Ø 23,81	10-14Q, -ABS
	2/94-				**PF208**		Ø 25,40	18Q, -ABS
	94-10/01				**CT016**		Ø 25,40	Alu, Rear Disc Brake, 14-18Q, -ABS
	94-				**PZ144**	Valeo	Ø 15,87	
2.5 TDi Panorama Eng.8140.47R (80kW)	94-02		R		**CF182**	Loc	Ø 27,00	10-14Q
	94-02		R		**CF181**		Ø 25,40	10Q Panorama, ambulanza
	94-02		R		**CF183**		Ø 28,60	18Q
	2/94-12/94				**PF207**		Ø 22,20	10-14Q, +ABS
	1/95-				**PF206**		Ø 23,81	10-14Q, +ABS
	2/94-				**PF205**		Ø 25,40	18Q, +ABS
	2/94-12/94				**PF210**		Ø 22,20	10-14Q, -ABS
	1/95-				**PF209**		Ø 23,81	10-14Q, -ABS
	2/94-				**PF208**		Ø 25,40	18Q, -ABS
	94-10/01				**CT016**		Ø 25,40	Alu, Rear Disc Brake, 14-18Q, -ABS
	94-				**PZ144**	Valeo	Ø 15,87	
2.5 TDi Panorama, 4WD Eng.8140.47 (85kW)	2/94-		R		**CF182**	Loc	Ø 27,00	18Q
	2/94-		R		**CF183**		Ø 28,60	18Q
	2/94-12/94				**PF207**		Ø 22,20	18Q, +ABS
	1/95-				**PF206**		Ø 23,81	18Q, +ABS
	2/94-				**PF205**		Ø 25,40	18Q, +ABS
	2/94-12/94				**PF210**		Ø 22,20	18Q, -ABS
	1/95-				**PF209**		Ø 23,81	18Q, -ABS
	2/94-				**PF208**		Ø 25,40	18Q, -ABS
	94-10/01				**CT016**		Ø 25,40	Alu, Rear Disc Brake, 14-18Q, -ABS
2.8 D, 4WD Eng.8140.63 (64kW)	98-02		R		**CF182**	Loc	Ø 27,00	14Q
	98-02		R		**CF183**		Ø 28,60	18Q
	-02				**PF526**	Bch	Ø 25,40	Ch 6194401-, -ABS, M/T
	98-				**PF206**		Ø 23,81	Ch -6194400, +ABS
	-02				**PF547**		Ø 25,40	Ch 6194401-, +ABS
	98-				**PF208**		Ø 25,40	Ch -6194400, -ABS
	98-10/01				**CT016**		Ø 25,40	Alu, Rear Disc Brake, 14-18Q, -ABS
	98-				**PZ144**	Valeo	Ø 15,87	
2.8 JTD, 4WD Eng.8140.43S (94kW)	00-02		R		**CF182**	Loc	Ø 27,00	14Q
	00-02		R		**CF183**		Ø 28,60	18Q
	-02				**PF526**	Bch	Ø 25,40	Ch 6194401-, -ABS, M/T
	01-				**PF206**		Ø 23,81	Ch -6194400, +ABS
	-02				**PF547**		Ø 25,40	Ch 6194401-, +ABS
	01-				**PF208**		Ø 25,40	Ch -6194400, -ABS
	00-10/01				**CT016**		Ø 25,40	Alu, Rear Disc Brake, 14-18Q, -ABS
	00-				**PZ144**	Valeo	Ø 15,87	
2.8 TDi, 4WD Eng.8140.43 (90kW)	97-02		R		**CF182**	Loc	Ø 27,00	14Q
	97-02		R		**CF183**		Ø 28,60	18Q
	97-02				**PF206**		Ø 23,81	14Q, +ABS
	97-02				**PF205**		Ø 25,40	18Q, +ABS

		Spare Parts	F/R	L/R	FRITECH ref.		DIMENSIONS mm.	NOTE
2.8 TDi, 4WD Eng.8140.43 (90kW)	97-02				**PF209**		Ø 23,81	14Q, -ABS
	97-02				**PF208**		Ø 25,40	18Q, -ABS
	97-10/01				**CT016**		Ø 25,40	Alu, Rear Disc Brake, 14-18Q, -ABS
	97-				**PZ144**	Valeo	Ø 15,87	
Ducato IV (244, Z) 4/02-1/06								
2.0 JTD Eng.RHV(DW10) (62kW)	4/02-		R		**CF182**	Loc	Ø 27,00	Rear Drum Brake
	4/02-				**PF526**	Bch	Ø 25,40	-ABS, M/T
	4/02-				**PF547**		Ø 25,40	+ABS
	02-				**PZ144**	Valeo	Ø 15,87	
2.0, Bipower Eng.RFL(XU10J2U) (81kW)	4/02-		R		**CF182**	Loc	Ø 27,00	Rear Drum Brake
	4/02-				**PF526**	Bch	Ø 25,40	-ABS, M/T
	4/02-				**PF547**		Ø 25,40	+ABS
	02-				**PZ144**	Valeo	Ø 15,87	
2.3 JTD Eng.F1AE0481C (81kW)	4/02-		R		**CF182**	Loc	Ø 27,00	Rear Drum Brake
	4/02-				**PF526**	Bch	Ø 25,40	-ABS, M/T
	4/02-				**PF547**		Ø 25,40	+ABS
	02-				**PZ144**	Valeo	Ø 15,87	
2.8 JTD Power Eng.8140.43N (107kW)	04-		R		**CF182**	Loc	Ø 27,00	Rear Drum Brake
	04-				**PF526**	Bch	Ø 25,40	-ABS, M/T
	04-				**PF547**		Ø 25,40	+ABS
	04-				**PZ144**	Valeo	Ø 15,87	
2.8 JTD, 4WD Eng.8140.43S (94kW)	4/02-		R		**CF182**	Loc	Ø 27,00	Rear Drum Brake
	4/02-				**PF526**	Bch	Ø 25,40	-ABS, M/T
	4/02-				**PF547**		Ø 25,40	+ABS
	02-				**PZ144**	Valeo	Ø 15,87	
2.8 TD, 4WD Eng.8140.43 (90kW)	03-06		R		**CF182**	Loc	Ø 27,00	Rear Drum Brake
	03-06				**PF526**	Bch	Ø 25,40	-ABS, M/T
	03-06				**PF547**		Ø 25,40	+ABS
Ducato V (250,251) 2/06-5/14								
100 2.2 MJT Eng.4HV (74kW)	06-		R		**CF182**	Loc	Ø 27,00	Russia
	06-				**PF724**	Bch	Ø 26,99	Alu, 17-20Q, +ESP, +VDC
	06-				**PF876**	Bch	Ø 26,99	Alu, 17-20Q, -ESP, -VDC, A/T
	06-				**PF874**	Bch	Ø 25,40	Alu, 11-15Q, -VDC
	06-				**PF875**	Bch	Ø 25,40	Alu, 11-15Q, +VDC
110 2.3 MJT Eng.F1AE3481G (83kW)	11-				**PF724**	Bch	Ø 26,99	Alu, 17-20Q, +ESP, +VDC
	11-				**PF876**	Bch	Ø 26,99	Alu, 17-20Q, -ESP, -VDC, M/T+A/T, -ASR
	11-				**PF874**	Bch	Ø 25,40	Alu, 11-15Q, -VDC
	11-				**PF875**	Bch	Ø 25,40	Alu, 11-15Q, +VDC
115 2.0 MJT Eng.250A1.000 (85kW)	11-				**PF724**	Bch	Ø 26,99	Alu, 17-20Q, +ESP, +VDC
	11-				**PF876**	Bch	Ø 26,99	Alu, 17-20Q, -ESP, -VDC, M/T+A/T, -ASR
	11-				**PF874**	Bch	Ø 25,40	Alu, 11-15-30-33Q, -VDC, M/T+A/T
	11-				**PF875**	Bch	Ø 25,40	Alu, 11-15-30-33Q, +VDC, M/T+A/T
120 2.3 MJT Eng.F1AE0481D (88kW)	06-		R		**CF182**	Loc	Ø 27,00	Russia
	06-				**PF724**	Bch	Ø 26,99	Alu, 17-20Q, +ESP, +VDC
	06-				**PF876**	Bch	Ø 26,99	Alu, 17-20Q, -ESP, -VDC
	06-				**PF874**	Bch	Ø 25,40	Alu, 11-15Q, -VDC
	06-				**PF875**	Bch	Ø 25,40	Alu, 11-15Q, +VDC
130 2.3 MJT Eng.F1AE0481N (96kW)	06-				**PF724**	Bch	Ø 26,99	Alu, 17-20Q, +ESP, +VDC
	06-				**PF876**	Bch	Ø 26,99	Alu, 17-20Q, -ESP, -VDC, A/T
	06-				**PF874**	Bch	Ø 25,40	Alu, 11-15-30-33Q, -VDC, M/T+A/T
	06-				**PF875**	Bch	Ø 25,40	Alu, 11-15-30-33Q, +VDC, M/T+A/T
140 3.0 Nat. Power Eng.F1CE0441A (100kW)	09-				**PF724**	Bch	Ø 26,99	Alu, 17-20Q, +ESP, +VDC
	09-				**PF876**	Bch	Ø 26,99	Alu, 17-20Q, -ESP, -VDC, A/T
150 2.3 MJT Eng.F1AE3481E (110kW)	11-				**PF724**	Bch	Ø 26,99	Alu, +ESP, +VDC
	11-				**PF876**	Bch	Ø 26,99	Alu, 17-20Q, -ESP, M/T+A/T, -ASR
	11-				**PF874**	Bch	Ø 25,40	Alu, 30-33Q, -VDC, A/T
	11-				**PF875**	Bch	Ø 25,40	Alu, 30-33Q, +VDC, A/T
150 3.0 MJT Eng.F1CE3481N (107kW)	10-				**PF876**	Bch	Ø 26,99	Alu, 17-20Q, -ESP, -VDC, M/T+A/T
160 3.0 MJT Eng.F1CE0481D (117kW)	06-		R		**CF182**	Loc	Ø 27,00	Russia
	06-				**PF724**	Bch	Ø 26,99	Alu, 17-20Q, +ESP, +VDC
	06-				**PF876**	Bch	Ø 26,99	Alu, 17-20Q, -ESP, -VDC
	06-				**PF874**	Bch	Ø 25,40	Alu, 11-15Q, -VDC
	06-				**PF875**	Bch	Ø 25,40	Alu, 11-15Q, +VDC

FIAT LCV

		Spare Parts	F/R	L/R	FRITECH ref.		DIMENSIONS mm.	NOTE
160 3.0 MJT Eng.F1CE3481M (115kW)	06-				**PF724**	Bch	Ø 26,99	Alu, 17-20Q, +ESP, +VDC
	06-				**PF876**	Bch	Ø 26,99	Alu, 17-20Q, -ESP, -VDC, M/T+A/T
	06-				**PF874**	Bch	Ø 25,40	Alu, 11-15Q, -VDC
	06-				**PF875**	Bch	Ø 25,40	Alu, 11-15Q, +VDC
180 3.0 MJT Eng.F1CE3481E (130kW)	11-				**PF724**	Bch	Ø 26,99	Alu, 17-20Q, +ESP, +VDC
	11-				**PF876**	Bch	Ø 26,99	Alu, 17-20Q, -ESP, -VDC, M/T+A/T, -ASR
	11-				**PF874**	Bch	Ø 25,40	Alu, 11-15-30-33Q, -VDC, M/T+A/T
	11-				**PF875**	Bch	Ø 25,40	Alu, 11-15-30-33Q, +VDC, M/T+A/T
Fiorino I (127) 10/77-12/87								
0.8 (28kW)	78-81		R		**CF002**		Ø 19,05	
	78-81				**PF050**		Ø 19,05	
	78-81				**CT001**	Benditalia	Ø 25,40	Alu
0.9 Eng.100GL.000 (33kW)	10/82-84		R		**CF004**		Ø 19,05	
	77-81		R		**CF002**		Ø 19,05	
	77-84				**PF050**		Ø 19,05	
	77-84				**CT001**	Benditalia	Ø 25,40	Alu
1.0 Eng.127A.000/ B (37kW)	10/82-87		R		**CF004**		Ø 19,05	
	80-81		R		**CF002**		Ø 19,05	
	80-87				**PF050**		Ø 19,05	
	80-87				**CT001**	Benditalia	Ø 25,40	Alu
1.3 D, Panorama Eng.127A5.000/ 146B1 (33kW)	10/82-86		R		**CF004**		Ø 19,05	
	81-82		R		**CF002**		Ø 19,05	
	81-86				**PF050**		Ø 19,05	
	81-86				**CT001**	Benditalia	Ø 25,40	Alu
Fiorino II (147) 1/86-12/93								
1.0, Pick up Eng.156A.000 (41kW)	86-88		R		**CF002**		Ø 19,05	
	86-88				**PF075**		Ø 19,05	
1.1 60 Eng.146A9.000 (40kW)	86-93		R		**CF216**		Ø 19,05	
	86-93				**PF023**	Ate	Ø 20,64	
	86-93				**PF187**	Bdx	Ø 20,64	
	86-93				**CT006**	Bdx/Ate	Ø 25,40	Alu
1.3 Eng.146A5.000 (49kW)	87-93		R		**CF216**		Ø 19,05	
	87-93				**PF023**	Ate	Ø 20,64	
	87-93				**PF187**	Bdx	Ø 20,64	
	87-93				**CT006**	Bdx/Ate	Ø 25,40	Alu
1.3 D Eng.127A5.000 (33kW)	86-		R		**CF002**		Ø 19,05	
	86-				**PF075**		Ø 19,05	
1.5 i.e. 75 Eng.149C1.000 (55kW)	88-93		R		**CF216**		Ø 19,05	
	88-93				**PF023**	Ate	Ø 20,64	
	88-93				**PF187**	Bdx	Ø 20,64	
	88-93				**CT006**	Bdx/Ate	Ø 25,40	Alu
1.7 D Eng.149B2.000 (42kW)	88-93		R		**CF216**		Ø 19,05	
	88-93				**PF023**	Ate	Ø 20,64	
	88-93				**PF187**	Bdx	Ø 20,64	
	88-93				**CT006**	Bdx/Ate	Ø 25,40	Alu
1.7 D Eng.149B3.000 (44kW)	87-90		R		**CF216**		Ø 19,05	
	87-90				**PF023**	Ate	Ø 20,64	
	87-90				**PF187**	Bdx	Ø 20,64	
	87-90				**CT006**	Bdx/Ate	Ø 25,40	Alu
Fiorino III (146) 1/93-12/06								
1.3 Eng.146A5.000 (49kW)	93-		R		**CF141**	Bdx	Ø 20,64	
	93-				**PF232**	Ate	Ø 22,20	
	93-				**PF186**	Bch	Ø 22,20	
1.4 i.e., Pick-up Eng.146C5.000/ 146D5.000 (49kW)	92-		R		**CF141**	Bdx	Ø 20,64	
	92-				**PF232**	Ate	Ø 22,20	
	92-				**PF186**	Bch	Ø 22,20	
1.6 i.e., Pick up Eng.146C6.000/ 146D6.000 (55kW)	93-		R		**CF141**	Bdx	Ø 20,64	
	93-				**PF232**	Ate	Ø 22,20	
	93-				**PF186**	Bch	Ø 22,20	
1.7 D Eng.146B2.000 (42kW)	93-		R		**CF141**	Bdx	Ø 20,64	
	93-				**PF237**	Ate	Ø 22,20	+ABS
1.7 TD, Pick up Eng.146D7.000 (46kW)	97-		R		**CF141**	Bdx	Ø 20,64	
	97-				**PF237**	Ate	Ø 22,20	+ABS
	97-				**PF232**	Ate	Ø 22,20	-ABS

		Spare Parts	F/R	L/R	FRITECH ref.		DIMENSIONS mm.	NOTE
1.7 TD, Pick up Eng.146D7.000 (46kW)	97-				**PF186**	Bch	Ø 22,20	-ABS
Fiorino IV (225) 1/07-								
1.3 MJT Eng.199B1.000 (70kW)	10-		R		**CF827**	Loc	Ø 20,64	Alu
	10-				**PF793**	Bch	Ø 22,20	Alu, M/T
	10-				**PZ146**	Fte	Ø 15,87	Alu
1.3 MJT 16v Eng.199A2.000 (55kW)	07-		R		**CF827**	Loc	Ø 20,64	Alu
	-7/08				**PF793**	Bch	Ø 22,20	Alu, Selespeed
1.4 Eng.350A1.000 (57kW)	10-		R		**CF827**	Loc	Ø 20,64	Alu
	10-				**PF793**	Bch	Ø 22,20	Alu
1.4 Eng.KFV/KFT (54kW)	07-		R		**CF827**	Loc	Ø 20,64	Alu
	-7/08				**PF793**	Bch	Ø 22,20	Alu
Grande Punto Van (299) 9/05-1/12								
1.3 MJT 16v Eng.199A2.000 (55kW)	05-		R		**CF827**	Loc	Ø 20,64	Alu
	05-				**PF699**	Bch	Ø 22,20	Vett -001185248, Alu, +ESP, +VDC, A/T
	05-				**PF700**	Bch	Ø 22,20	Vett 001185249-, Alu, -ESP
1.3 MJT 16v Eng.199A3.000 (66kW)	05-		R		**CF827**	Loc	Ø 20,64	Alu
	05-				**PF699**	Bch	Ø 22,20	Vett -001185248, Alu, +ESP, +VDC, A/T
	05-				**PF700**	Bch	Ø 22,20	Vett 001185249-, Alu, -ESP
1.4 Eng.350A1.000 (57kW)	05-		R		**CF827**	Loc	Ø 20,64	Alu
	05-				**PF699**	Bch	Ø 22,20	Vett -001185248, Alu, +ESP, +VDC, A/T
	05-				**PF700**	Bch	Ø 22,20	Vett 001185249-, Alu, -ESP
Idea Van 1/04-12/12								
1.3 MJT Eng.188A9.000 (51kW)	04-6/05		R		**CF778**	Loc	Ø 22,00	Alu
	7/05-		R		**CF829**	Loc	Ø 22,00	Alu
	04-				**PF500**	Bch	Ø 23,81	Alu, +ABS, -VDC
	04-12/06				**PF482**	Bch	Ø 23,81	Alu, +ABS, +VDC
1.3 MJT Eng.199A3.000 (66kW)	05-		R		**CF827**	Loc	Ø 20,64	Alu
	04-12/06				**PF482**	Bch	Ø 23,81	Alu, +ABS, +VDC
	05-				**PF500**	Bch	Ø 23,81	Alu, +ABS, -VDC
1.4 Eng.192B2.000 (66kW)	03-6/05		R		**CF778**	Loc	Ø 22,00	Alu
	7/05-		R		**CF829**	Loc	Ø 22,00	Alu
	03-				**PF482**	Bch	Ø 23,81	Alu, +ABS, +VDC
	03-				**PF500**	Bch	Ø 23,81	Alu, +ABS, -VDC
1.4 16v Eng.843A1.000 (70kW)	04-6/05		R		**CF778**	Loc	Ø 22,00	Alu
	7/05-		R		**CF829**	Loc	Ø 22,00	Alu
	04-				**PF500**	Bch	Ø 23,81	Alu, +ABS, -VDC
	04-12/06				**PF482**	Bch	Ø 23,81	Alu, +ABS, +VDC
1.9 JTD Eng.188B2.000 (74kW)	04-		R		**CF090**	Loc	Ø 20,64	
	04-				**PF500**	Bch	Ø 23,81	Alu, +ABS, -VDC
	04-12/06				**PF482**	Bch	Ø 23,81	Alu, +ABS, +VDC
Marengo 1/83-12/01								
Tempra 1.9 D Eng.160A7.000 (48kW)	90-93		R		**CF079**		Ø 17,50	
	90-93				**PF006**		Ø 20,64	
Tempra 1.9 TD Eng.160A6.000/ 160D1.000 (66kW)	90-93		R		**CF079**		Ø 17,50	
	90-93				**PF132**		Ø 20,64	+ABS
	90-93				**PF006**		Ø 20,64	-ABS
Multipla Van 4/99-12/10								
1.6 16v Eng.182B6.000 (76kW)	4/99-02		R		**CF135**	Bdx	Ø 20,64	
	99-02				**PF630**	Bch	Ø 20,64	Alu, Supplied -Servo, +ABS, +VDC
	4/99-02				**PF042**	Bdx	Ø 22,20	Supplied -Servo
1.9 JTD Eng.186A8.000 (85kW)	02-		R		**CF135**	Bdx	Ø 20,64	
	02-				**PF630**	Bch	Ø 20,64	Alu, Supplied -Servo, +ABS, +VDC
	02-				**PF042**	Bdx	Ø 22,20	Supplied -Servo
1.9 JTD Eng.186A9.000 (88kW)	04-		R		**CF135**	Bdx	Ø 20,64	
	04-				**PF630**	Bch	Ø 20,64	Vett -2178713, Alu, Supplied -Servo, +ABS, +VDC
	04-				**PF042**	Bdx	Ø 22,20	Vett -2158353, Supplied -Servo, -VDC
Panda Van I (141A) 1/86-8/98								
0.75 Eng.141B.000 (25kW)	86-95		R		**CF004**		Ø 19,05	
	86-95				**PF018**		Ø 19,05	LHD
1.0 i.e. Kat, 4WD Eng.141C2.000/ 156A2.246	87-98		R		**CF004**		Ø 19,05	
(33kW)	87-98				**PF018**		Ø 19,05	LHD
1.0, 4WD Eng.156A2.100/ 156A3.100 (32kW)	86-92		R		**CF004**		Ø 19,05	
	86-92				**PF018**		Ø 19,05	LHD

FIAT LCV

		Spare Parts	F/R	L/R	FRITECH ref.		DIMENSIONS mm.	NOTE
1.3 D Eng.156A5.000 (27kW)	86-92		R		**CF004**		Ø 19,05	
	86-92				**PF009**	Loc	Ø 20,64	LHD
Panda Van II (169, 271) 9/03-1/12								
1.1 Eng.187A1.000 (40kW)	03-		R		**CF067**	Bdx	Ø 20,64	+ABS, +VDC
	5/10-		R		**CF866**	Loc	Ø 20,64	Alu, +ABS, +ESP
	03-		R		**CF090**	Loc	Ø 20,64	-ABS
	03-				**PF546**	Bch	Ø 20,64	+ABS, -VDC
	03-				**PF545**	Bch	Ø 20,64	Alu, +ABS, +VDC
	03-				**PF544**	Bch	Ø 20,64	-ABS
1.2 LPG Eng.169A4.000 (51kW)	10-12		R		**CF827**	Loc	Ø 20,64	Alu
	10-				**PF846**	Trw	Ø 20,64	Alu
1.2 LPG Eng.188A4.000 (44kW)	09-		R		**CF827**	Loc	Ø 20,64	Alu
	09-				**PF846**	Trw	Ø 20,64	Alu
1.2, 4WD Eng.169A4.000 (51kW)	10-				**PF846**	Trw	Ø 20,64	Alu, +ABS
1.2, 4WD Eng.188A4.000 (38-44kW)	03-		R		**CF067**	Bdx	Ø 20,64	+ABS, +VDC
	5/10-		R		**CF866**	Loc	Ø 20,64	Alu, +ABS, +ESP
	03-		R		**CF090**	Loc	Ø 20,64	-ABS
	03-				**PF546**	Bch	Ø 20,64	+ABS, -VDC
	03-				**PF545**	Bch	Ø 20,64	Alu, +ABS, +VDC
	03-				**PF544**	Bch	Ø 20,64	-ABS
1.3 D MJT 4x4 Eng.188A9.000/188A8.000 (51kW)	9/03-		R		**CF067**	Bdx	Ø 20,64	+ABS
	5/10-		R		**CF866**	Loc	Ø 20,64	Alu, +ABS, +ESP
	9/03-		R		**CF090**	Loc	Ø 20,64	-ABS
	03-				**PF546**	Bch	Ø 20,64	+ABS, -VDC
	03-				**PF545**	Bch	Ø 20,64	Alu, +ABS, +VDC
	03-				**PF544**	Bch	Ø 20,64	-ABS
1.3 JTD Eng.169A1.000 (55kW)	06-		R		**CF067**	Bdx	Ø 20,64	+ABS
	5/10-		R		**CF866**	Loc	Ø 20,64	Alu, +ABS, +ESP
	06-		R		**CF090**	Loc	Ø 20,64	-ABS
	06-				**PF546**	Bch	Ø 20,64	+ABS, -VDC
	06-				**PF545**	Bch	Ø 20,64	Alu, +ABS, +VDC
	06-				**PF544**	Bch	Ø 20,64	-ABS
1.4 Natural power Eng.350A1.000 (57kW)	09-		R		**CF827**	Loc	Ø 20,64	Alu
	09-				**PF846**	Trw	Ø 20,64	Alu
Panda Van III (312, 519) 2/12-								
0.9, 4x4 Eng.312A2.000 (63kW)	12-		R		**CF827**	Loc	Ø 20,64	Alu
1.2 Eng.169A4.000 (51kW)	12-		R		**CF827**	Loc	Ø 20,64	Alu
1.2 LPG Eng.169A4.000 (51kW)	12-		R		**CF827**	Loc	Ø 20,64	Alu
1.3 D MJT, 4x4 Eng.199A9.000 (55kW)	12-		R		**CF827**	Loc	Ø 20,64	Alu
Punto Evo (199) Van 3/09-12/12								
1.3 MJT Eng.199A2.000/ A9.000 (55kW)	09-		R		**CF827**	Loc	Ø 20,64	Alu
	09-				**PF700**	Bch	Ø 22,20	Alu, -ESP
1.3 MJT Eng.199A3.000 (66kW)	10-12		R		**CF827**	Loc	Ø 20,64	Alu
	10-12				**PF700**	Bch	Ø 22,20	Alu, M/T
1.3 MJT Eng.199B1.000 (70kW)	09-		R		**CF827**	Loc	Ø 20,64	Alu
	09-				**PF700**	Bch	Ø 22,20	Alu, -ESP
1.4 Eng.350A1.000 (57kW)	09-		R		**CF827**	Loc	Ø 20,64	Alu
	09-				**PF700**	Bch	Ø 22,20	Alu, A/T
1.4 LPG Eng.350A1.000 (57kW)	09-				**PF858**	Bch	Ø 23,81	Alu
Punto Van I (176L) 4/96-2/00								
1.1 Eng.176B2.000 (40kW)	96-00		R		**CF067**	Bdx	Ø 20,64	+ABS
	96-00		R		**CF090**	Loc	Ø 20,64	-ABS
	96-00				**PF006**		Ø 20,64	
1.7 D Eng.176B3.000 (42kW)	96-00		R		**CF067**	Bdx	Ø 20,64	+ABS
	96-00		R		**CF090**	Loc	Ø 20,64	-ABS
	96-00				**PF006**		Ø 20,64	
	96-00				**CZ072**		Ø 25,40	RHD
1.7 TD Eng.176A5.000 (52kW)	96-00		R		**CF067**	Bdx	Ø 20,64	+ABS
	96-00		R		**CF116**	Loc	Ø 22,00	+ABS
	96-00				**PF006**		Ø 20,64	
1.7 TD Eng.176B7.000 (46kW)	96-99		R		**CF067**	Bdx	Ø 20,64	+ABS
	96-99		R		**CF090**	Loc	Ø 20,64	-ABS
	96-99				**PF006**		Ø 20,64	
	96-99				**CZ072**		Ø 25,40	RHD

		Spare Parts	F/R	L/R	FRITECH ref.		DIMENSIONS mm.	NOTE
Punto Van II (188AX) 2/00-8/05								
1.2 Eng.188A4.000 (44kW)	00-		R		**CF151**		Ø 20,64	Alu
	2/00-				**PF236**	Bch	Ø 22,20	Alu, +ABS
	2/00-				**PF536**	Bch	Ø 20,64	-ABS
	00-05				**PZ038**	Ap	Ø 15,87	
1.3 JTD Eng.188A9.000 (51kW)	03-05		R		**CF255**	Loc	Ø 22,00	Alu, +VDC
	03-05				**PF542**	Bch	Ø 22,20	Alu, +ABS, +ESP
	03-05				**PF532**	Bch	Ø 22,20	+ABS, -ESP
	03-05				**PF525**	Bch	Ø 22,20	-ABS
	03-05				**PF841**	Trw	Ø 22,20	Alu, +ABS, +ESP, +TC, LHD
1.9 DS 60 Eng.188A3.000 (44kW)	00-		R		**CF255**	Loc	Ø 22,00	Alu, A/T
	03-				**PF532**	Bch	Ø 22,20	+ABS
	03-				**PF525**	Bch	Ø 22,20	-ABS
1.9 JTD Eng.188A7.000 (63kW)	00-2/02		R		**CF255**	Loc	Ø 22,00	Alu
	2/02-		R		**CF151**		Ø 20,64	Alu
	00-				**PF532**	Bch	Ø 22,20	+ABS
	00-				**PF525**	Bch	Ø 22,20	-ABS
Qubo IV (225) 1/08-								
1.3 JTD Eng.199A2.000 (55kW)	08-		R		**CF827**	Loc	Ø 20,64	Alu
	08-				**PF793**	Bch	Ø 22,20	Alu, M/T
	08-				**PZ146**	Fte	Ø 15,87	Alu
1.3 MJT Eng.199B1.000 (70kW)	10-		R		**CF827**	Loc	Ø 20,64	Alu
	10-				**PF793**	Bch	Ø 22,20	Alu, M/T
	10-				**PZ146**	Fte	Ø 15,87	Alu
1.4 Eng.350A1.000 (57kW)	09-		R		**CF827**	Loc	Ø 20,64	Alu
	09-				**PF843**	Bch	Ø 22,20	Alu
	09-				**PF793**	Bch	Ø 22,20	Alu
	09-				**PZ146**	Fte	Ø 15,87	Alu
1.4 Eng.KFV (54kW)	08-		R		**CF827**	Loc	Ø 20,64	Alu
	-7/08				**PF843**	Bch	Ø 22,20	Alu
Scudo I (220L) 2/96-12/06								
1.6 Eng.220A2.000 (58kW)	96-		R		**CF094**		Ø 19,05	
	96-				**PF196**	Bdx	Ø 22,20	+ABS
	96-				**PF197**	Bdx	Ø 22,20	-ABS
1.9 D Eng.D9B/ D8A/ U (51kW)	96-		R		**CF094**		Ø 19,05	
	96-				**PF464**	Bch	Ø 23,81	+ABS, RHD
	96-				**PF429**	Bch	Ø 23,81	-ABS, RHD
	96-				**PF196**	Bdx	Ø 22,20	+ABS
	96-				**PF197**	Bdx	Ø 22,20	-ABS
1.9 D Eng.WJZ(DW8) (51kW)	98-		R		**CF094**		Ø 19,05	
	98-				**PF464**	Bch	Ø 23,81	+ABS, RHD
	98-				**PF429**	Bch	Ø 23,81	-ABS, RHD
	98-				**PF196**	Bdx	Ø 22,20	+ABS
	98-				**PF197**	Bdx	Ø 22,20	-ABS
1.9 TD Eng.D8B (68kW)	98-		R		**CF094**		Ø 19,05	
	98-				**PF464**	Bch	Ø 23,81	+ABS, RHD
	98-				**PF429**	Bch	Ø 23,81	-ABS, RHD
	98-				**PF196**	Bdx	Ø 22,20	+ABS
	98-				**PF197**	Bdx	Ø 22,20	-ABS
1.9 TD Eng.DHX(XUD9TF-L) (66kW)	96-		R		**CF094**		Ø 19,05	
	96-				**PF464**	Bch	Ø 23,81	+ABS, RHD
	96-				**PF429**	Bch	Ø 23,81	-ABS, RHD
	96-				**PF196**	Bdx	Ø 22,20	+ABS
	96-				**PF197**	Bdx	Ø 22,20	-ABS
2.0 Eng.RFN(EW10J4) (100kW)	02-				**PF464**	Bch	Ø 23,81	+ABS
	02-				**PF429**	Bch	Ø 23,81	-ABS
2.0 JTD Eng.RHX (69kW)	99-		R		**CF094**		Ø 19,05	
	5/99-				**PF464**	Bch	Ø 23,81	+ABS
	5/99-				**PF429**	Bch	Ø 23,81	-ABS
	12/99-				**PZ130**	Fte	Ø 19,05	Alu
2.0 JTD	02-		R		**CF094**		Ø 19,05	
Eng.RHZ(DW10ATED)/RHW(DW10ATED4)	02-				**PF464**	Bch	Ø 23,81	+ABS
(80kW)	02-				**PF429**	Bch	Ø 23,81	-ABS
	12/02-				**PZ130**	Fte	Ø 19,05	Alu

		Spare Parts	F/R	L/R	FRITECH ref.		DIMENSIONS mm.	NOTE
Scudo II (272) 1/07-								
1.6 JTD Eng.DV6UTED4 (66kW)	07-		R		**CF830**	Trw	Ø 22,20	Alu
	07-				**PF878**	Ate	Ø 25,40	Alu, Servo 392mm, +ESP
	07-				**PF877**	Ate	Ø 25,40	Alu, Servo 280mm, -ESP
2.0 JTD Eng.RHR(DW10BTED4) (100kW)	07-		R		**CF830**	Trw	Ø 22,20	Alu
	07-				**PF878**	Ate	Ø 25,40	Alu, Servo 392mm, +ESP
	07-				**PF877**	Ate	Ø 25,40	Alu, Servo 280mm, -ESP
2.0 JTD, 4WD Eng.RHK(DW10UTED4) (88kW)	07-		R		**CF830**	Trw	Ø 22,20	Alu
	07-				**PF878**	Ate	Ø 25,40	Alu, Servo 392mm, +ESP
	07-				**PF877**	Ate	Ø 25,40	Alu, Servo 280mm, -ESP
2.0 MJT Eng.RH02 (94kW)	11-				**PF878**	Ate	Ø 25,40	Alu, Servo 392mm, +ESP
	11-				**PF877**	Ate	Ø 25,40	Alu, Servo 280mm, -ESP
2.0 MJT Eng.RHH (120kW)	10-		R		**CF830**	Trw	Ø 22,20	Alu
	10-				**PF878**	Ate	Ø 25,40	Alu, +ESP
Seicento Van 1/98-12/10								
0.9 i Eng.1170A1.046 (29kW)	4/98-		R		**CF004**		Ø 19,05	
	4/98-				**PF034**		Ø 19,05	
1.1 i Eng.176B2.000/187A1.000 (40kW)	4/98-		R		**CF004**		Ø 19,05	
	4/98-				**PF034**		Ø 19,05	
Stilo Van 1/03-12/10								
1.6 16v Eng.192B3.000 (77kW)	03-10				**PF543**	Bch	Ø 22,20	Alu, -ESP
	03-10				**PF481**	Bch	Ø 22,20	
1.9 JTD Eng.192A5.000 (103kW)	03-				**PF500**	Bch	Ø 23,81	Alu
1.9 JTD Eng.192A8.000 (88kW)	05-				**PF543**	Bch	Ø 22,20	Alu, -ESP
1.9 JTD Eng.937A5.000 (110kW)	05-				**PF500**	Bch	Ø 23,81	Alu
Strada I (178E) 6/99-1/05								
1.2 Eng.188A4.000 (44kW)	03-05		R		**CF094**		Ø 19,05	
	03-05				**PF233**	Ate	Ø 22,20	+ABS
	03-05				**PF232**	Ate	Ø 22,20	
	03-05				**PF186**	Bch	Ø 22,20	
1.2 16v Eng.178B5.000 (54kW)	99-05		R		**CF094**		Ø 19,05	
	99-05				**PF233**	Ate	Ø 22,20	+ABS
	99-05				**PF232**	Ate	Ø 22,20	
	99-05				**PF186**	Bch	Ø 22,20	
	99-05				**CZ116**	Luk	Ø 22,20	
1.7 TD Eng.176A3.000 (51kW)	99-05		R		**CF094**		Ø 19,05	
	99-05				**PF233**	Ate	Ø 22,20	+ABS
	99-05				**PF232**	Ate	Ø 22,20	
	99-05				**PF186**	Bch	Ø 22,20	
1.9 D Eng.223A6.000 (46kW)	00-05		R		**CF094**		Ø 19,05	
	00-05				**PF233**	Ate	Ø 22,20	+ABS
	00-05				**PF232**	Ate	Ø 22,20	
	00-05				**PF186**	Bch	Ø 22,20	
1.9 JTD Eng.188A2.000 (59kW)	03-05		R		**CF094**		Ø 19,05	
	03-05				**PF233**	Ate	Ø 22,20	+ABS
	03-05				**PF232**	Ate	Ø 22,20	
	03-05				**PF186**	Bch	Ø 22,20	
Strada II (178EXG) 2/05-								
1.2 8v MPI Eng.178B7.045 (44kW)	05-		R		**CF094**		Ø 19,05	
	05-				**PF233**	Ate	Ø 22,20	+ABS
	05-				**PF232**	Ate	Ø 22,20	-ABS
	05-				**PF186**	Bch	Ø 22,20	-ABS
1.2 Trekking Eng.182B2.000 (60kW)	05-				**PF233**	Ate	Ø 22,20	+ABS
	05-				**PF232**	Ate	Ø 22,20	-ABS
	05-				**PF186**	Bch	Ø 22,20	-ABS
1.3 MJT Eng.199B1.000 (70kW)	10-		R		**CF141**	Bdx	Ø 20,64	
1.3 MJT (Germany) Eng.223A9.000 (63kW)	05-		R		**CF094**		Ø 19,05	
	05-				**PF233**	Ate	Ø 22,20	+ABS
	05-				**PF232**	Ate	Ø 22,20	-ABS
	05-				**PF186**	Bch	Ø 22,20	-ABS
1.6 16v Trekking Eng.178D2.011 (76kW)	05-		R		**CF094**		Ø 19,05	
	05-				**PF233**	Ate	Ø 22,20	+ABS
	05-				**PF232**	Ate	Ø 22,20	-ABS
	05-				**PF186**	Bch	Ø 22,20	-ABS

FIAT LCV

		Spare Parts	F/R	L/R	FRITECH ref.		DIMENSIONS mm.	NOTE
1.7 TD Eng.176A3.000 (51kW)	05-		R		**CF094**		Ø 19,05	
	05-				**PF233**	Ate	Ø 22,20	+ABS
	05-				**PF232**	Ate	Ø 22,20	-ABS
	05-				**PF186**	Bch	Ø 22,20	-ABS
Talento (290) 3/89-3/94								
1.9 D Eng.149B1.000 (52kW)	9/89-94		R		**CF306**	Luc	Ø 22,22	
	9/89-94				**PF031**		Ø 22,20	
	9/89-94				**CT011**		Ø 25,40	Alu
2.0 Eng.170B (55kW)	9/89-94		R		**CF306**	Luc	Ø 22,22	
	9/89-94				**PF031**		Ø 22,20	
	9/89-94				**CT011**		Ø 25,40	Alu
Uno Van 1/83-10/95								
1.0 Eng.156A2.000 (32kW)	90-95		R		**CF004**		Ø 19,05	
	90-95				**PF009**	Loc	Ø 20,64	
1.3 D Eng.146B1.000 (33kW)	83-		R		**CF004**		Ø 19,05	
	1/86-9/89				**PF009**	Loc	Ø 20,64	
	93-				**PF009**	Loc	Ø 20,64	
	6/83-				**PF053**		Ø 19,05	+Servo
	7/83-85				**PF018**		Ø 19,05	
	89-12/92				**PF203**		Ø 22,20	
	83-				**CT006**	Bdx/Ate	Ø 25,40	Alu
	83-				**CZ011**		Ø 25,40	RHD
	83-				**PZ015**		Ø 19,05	RHD
1.4 TD Eng.146B3.000 (52kW)	86-90		R		**CF004**		Ø 19,05	
	86-90				**PF009**	Loc	Ø 20,64	LHD
	86-90				**PF203**		Ø 22,20	RHD
	89-				**CZ011**		Ø 25,40	RHD
	89-				**PZ015**		Ø 19,05	RHD
1.7 D Eng.146B2.000 (42kW)	89-93		R		**CF004**		Ø 19,05	
	89-93				**PF009**	Loc	Ø 20,64	LHD
	89-93				**PF203**		Ø 22,20	RHD
	89-				**CZ011**		Ø 25,40	RHD
	89-				**PZ015**		Ø 19,05	RHD
1.7 D Eng.149B3.000 (44kW)	90-95		R		**CF004**		Ø 19,05	
	90-95				**PF009**	Loc	Ø 20,64	LHD
	90-95				**PF203**		Ø 22,20	RHD

FORD AUSTRALIA

Cortina (TD, TE, TF)								
All models	74-82		R		**CF732**		Ø 17,78	
Fairlane/ Ltd (ZA,ZB,ZC,ZD)								
All models	67-72		R		**CF734**		Ø 22,20	
Falcon (XA,XR,XT,XW,XY)								
All models	66-73		R		**CF734**		Ø 22,20	
Falcon (XB)								
All models	73-		R		**CF732**		Ø 17,78	

FORD BRASIL

Festiva								
All models	88-93		R		**CF302**		Ø 15,87	

FORD EUROPE

Anglia 1/59-1/67								
1.0 Eng.105E/ 107E/ 307E	59-67		F	L	**CF192**		Ø 19,05	
	59-67		R		**CF261**		Ø 17,78	Alu
1.2 Eng.HMDA (34-35kW)	59-67		F	L	**CF192**		Ø 19,05	
	59-67		R		**CF261**		Ø 17,78	Alu
B-Max 10/12-								
1.0 12V Ecoboost Eng.M1JA (92kW)	13-		R		**CF909**		Ø 20,64	Alu
1.0 12VEcoBoost Eng.FDOX (74kW)	12-		R		**CF909**		Ø 20,64	Alu
1.4 16V Eng.HDEZ (66kW)	12-		R		**CF909**		Ø 20,64	Alu
1.4 GPL Eng.RTJC (66kW)	13-		R		**CF909**		Ø 20,64	Alu
1.5 TDCi Eng.UGJC (55kW)	12-		R		**CF909**		Ø 20,64	Alu

FORD EUROPE

		Spare Parts	F/R	L/R	FRITECH ref.		DIMENSIONS mm.	NOTE
1.6 TDCi Eng.DS0X (70kW)	12-		R		**CF909**		Ø 20,64	Alu
1.6 Ti 16V Eng.HDEZ (77kW)	12-		R		**CF909**		Ø 20,64	Alu
Capri I (ECJ) 12/68-2/74								
1.3 Eng.K13L (35-37-39-48-53kW)	68-72		R		**CF417**		Ø 17,78	Alu
1.6 Eng.LE (53-65kW)	72-74		R		**CF417**		Ø 17,78	Alu
2.0 Eng.2602E/ 2724E/ 3006E/ 3010E (63-66-69kW)	69-74		R		**CF417**		Ø 17,78	Alu
3.0 Eng.HY (101-103kW)	72-74		R		**CF417**		Ø 17,78	Alu
Capri II (GECP) 2/74-12/77								
1.3 Eng.J1E (37kW)	11/74-12/77		R		**CF076**		Ø 20,64	
1.3 Eng.J1E/ K13L (40-42kW)	74-77		R		**CF358**		Ø 17,78	
1.6 Eng.LCE (53kW)	74-77		R		**CF358**		Ø 17,78	
2.0 Eng.NYL/ NWN/ TL20H (66-72kW)	74-77		R		**CF358**		Ø 17,78	
2.3 Eng.YYE/ TV23 (79kW)	74-77		R		**CF358**		Ø 17,78	
3.0 Eng.HYF/ EV30H (101kW)	74-77		R		**CF358**		Ø 17,78	
Capri III (GECP) 1/78-4/87								
1.3 Eng.J1E/ K13L (40kW)	78-81		R		**CF196**		Ø 19,05	
	78-81				**PF105**		Ø 20,64	
1.6 Eng.LCN (49-52-54kW)	78-87		R		**CF358**		Ø 17,78	
	78-87				**PF105**		Ø 20,64	
2.0 Eng.NEN/ TL20H/ NYL (64-66-74kW)	78-85		R		**CF358**		Ø 17,78	
	78-85				**PF105**		Ø 20,64	
2.8 i T. Eng.TV28 (138-150kW)	82-87		R		**CF076**		Ø 20,64	
2.8 Super Inj. Eng.PRN/ TV28 (118kW)	81-87		R		**CF076**		Ø 20,64	
3.0 Eng.EV30H (101kW)	78-81		R		**CF358**		Ø 17,78	
	78-81				**PF105**		Ø 20,64	
C-Max I 2/07-10/10								
1.6 Eng.SHDA (74kW)	07-11/08				**PF867**	Ate	Ø 25,40	Alu, +ABS
1.6 TDCi Eng.G8DB (80kW)	07-11/08				**PF867**	Ate	Ø 25,40	Alu, +ABS
1.6 TDCi Eng.HHDA/ B (66kW)	07-11/08				**PF867**	Ate	Ø 25,40	Alu, +ABS
1.8 TDCi Eng.KKDA (85kW)	07-11/08				**PF867**	Ate	Ø 25,40	Alu, +ABS
1.8, Flexifuel Eng.HDEA (92kW)	07-11/08				**PF867**	Ate	Ø 25,40	Alu, +ABS
2.0 TDCi Eng.C20DD0X (81kW)	07-11/08				**PF867**	Ate	Ø 25,40	Alu, +ABS
2.0 TDCi Eng.G6DB/ D (100kW)	07-11/08				**PF867**	Ate	Ø 25,40	Alu, +ABS
2.0, CNG, LPG Eng.SYDA/ AODA/ B (107kW)	07-11/08				**PF867**	Ate	Ø 25,40	Alu, +ABS
Consul (GGCL,FL,NL) 1/72-12/75								
1.7, Coupe, SW Eng.17M/ EV17L (48-51-55kW)	72-75		R		**CF075**	Luc	Ø 19,05	Exc. Denmark, Nederland, Spain, Finland, Only SW, h. 39mm (body)
	72-75		R		**CF085**	Luc	Ø 20,64	
	72-75		R		**CF007**		Ø 17,78	
2.0, Coupe, SW Eng.TL20H (73kW)	72-75		R		**CF075**	Luc	Ø 19,05	Exc. Denmark, Nederland, Spain, Finland, h. 39mm (body)
	77-79		R		**CF085**	Luc	Ø 20,64	Incl. Denmark, Nederland, Spain, Finland
2.0, SW Eng.2602E/ 2724E/ 3006E/ 3010E (60-66kW)	72-74		R		**CF085**	Luc	Ø 20,64	-ABS
	72-75		R		**CF075**	Luc	Ø 19,05	Exc. Denmark, Nederland, Spain, Finland, h. 39mm (body)
	72-75		R		**CF075**		Ø 19,05	h. 39mm (body)
2.3, Coupe, SW Eng.YYE/ TV23 (79kW)	72-74		R		**CF085**	Luc	Ø 20,64	-ABS
	72-75		R		**CF075**	Luc	Ø 19,05	Exc. Denmark, Nederland, Spain, Finland, h. 39mm (body)
	77-79		R		**CF085**	Luc	Ø 20,64	Incl. Denmark, Nederland, Spain, Finland
2.5, SW Eng.EV25H (88kW)	77-79		R		**CF085**	Luc	Ø 20,64	Incl. Denmark, Nederland, Spain, Finland
	72-74		R		**CF075**		Ø 19,05	h. 39mm (body)
3.0 Eng.EV30H (101kW)	72-75		R		**CF075**	Luc	Ø 19,05	Exc. Denmark, Nederland, Spain, Finland, h. 39mm (body)
	77-79		R		**CF085**	Luc	Ø 20,64	Incl. Denmark, Nederland, Spain, Finland
	72-74		R		**CF075**		Ø 19,05	h. 39mm (body)
Cortina 10/62-3/72								
1.2, Coupe, Estate Eng.HMDA (34-35kW)	62-66		F	L	**CF192**		Ø 19,05	
	62-66		R		**CF335**		Ø 19,05	Alu
1.3 Lotus	66-70		R		**CF417**		Ø 17,78	Alu
1.3, Coupe, Estate Eng.K13L (35-37-40-42kW)	66-72		R		**CF085**	Luc	Ø 20,64	Saloon, Berlina
	66-72		R		**CF355**		Ø 19,05	Saloon, Berlina
	8/71-72		R		**CF075**		Ø 19,05	h. 39mm (body)

		Spare Parts	F/R	L/R	FRITECH ref.		DIMENSIONS mm.	NOTE
1.3, Coupe, Estate Eng.K13L (35-37-40-42kW)	66-72				**PF094**	Ate	Ø 20,64	-Servo
	66-72				**PF104**	Luc	Ø 20,64	-Servo
1.5 GT, Coupe, Estate (56kW)	62-66		F	L	**CF192**		Ø 19,05	
	62-66		R		**CF335**		Ø 19,05	Alu
1.5 Lotus Coupe (78kW)	66-70		R		**CF417**		Ø 17,78	Alu
1.6, Coupe, Estate Eng.TL16L (45-50-51kW)	67-72		R		**CF355**		Ø 19,05	
	67-72				**PF094**	Ate	Ø 20,64	-Servo
	67-72				**PF104**	Luc	Ø 20,64	-Servo
2.0, Coupe, Estate (72kW)	70-72		R		**CF007**		Ø 17,78	
	70-72				**PF094**	Ate	Ø 20,64	-Servo
	70-72				**PF104**	Luc	Ø 20,64	-Servo
2.3 (83kW)	62-72		R		**CF007**		Ø 17,78	
	62-72				**PF094**	Ate	Ø 20,64	-Servo
	62-72				**PF104**	Luc	Ø 20,64	-Servo
Cougar (EC) 8/98-12/01								
2.0 16v Eng.EDBA/ B/ C/ D (96kW)	1/99-				**PF254**		Ø 25,40	Alu, +ABS
	8/98-12/01				**PZ092**		Ø 19,05	Alu
2.5 ST 200 Eng.SGA (151kW)	00-				**PF254**		Ø 25,40	Alu, +ABS
	1/00-12/01				**PZ092**		Ø 19,05	Alu
2.5 V6 24v Eng.LCBA (125kW)	1/99-				**PF254**		Ø 25,40	Alu, +ABS
	8/98-12/01				**PZ092**		Ø 19,05	Alu
2.5 V6 24v Eng.LCBC/ E (125kW)	00-				**PF254**		Ø 25,40	Alu, +ABS
	6/00-12/01				**PZ092**		Ø 19,05	Alu
Ecosport 2/14-								
1.0 12V Ecoboost Eng.M1JC (92kW)	14-		R		**CF1014**		Ø 20,64	Alu
1.5 TDCi Eng.ENUG (66kW)	14-		R		**CF1014**		Ø 20,64	Alu
1.5 Ti Eng.UEJB (82kW)	14-		R		**CF1014**		Ø 20,64	Alu
Escort I (AFH,ATH) 1/68-2/76								
1.1, SW Eng.G1/ KL11L/ H(751M) (29-32kW)	68-74		F	L	**CF192**		Ø 19,05	
	68-74		R		**CF335**		Ø 19,05	Alu
1.1, SW Eng.G2/ KL11L/ H(751M) (35kW)	70-76		R		**CF335**		Ø 19,05	Alu
1.3 Eng.J1F/ K13L (40kW)	73-76		F	L	**CF192**		Ø 19,05	
	73-76		R		**CF335**		Ø 19,05	Alu
1.3 Eng.K13L (35-38kW)	68-71		F	L	**CF192**		Ø 19,05	
	68-71		R		**CF335**		Ø 19,05	Alu
1.3 GT Eng.KL13H (47kW)	68-71		R		**CF335**		Ø 19,05	Alu
1.6 Mexico Eng.KL16H (63kW)	70-75		R		**CF417**		Ø 17,78	Alu
1.6 RS Eng.BDA (84-90kW)	70-74		R		**CF417**		Ø 17,78	Alu
Escort II (ATH) 3/73-7/81								
1.1 Eng.G2/ KL11L/ H(751M) (35kW)	75-80		F	L	**CF375**		Ø 22,22	
	75-1/76		F	R	**CF369**		Ø 20,64	
	75-80		F	R	**CF376**		Ø 22,22	
	75-80		R		**CF358**		Ø 17,78	
	75-1/76		R		**CF196**		Ø 19,05	
	2/76-80		R		**CF076**		Ø 20,64	
1.1, SW Eng.G1/ KL11L/ H(751M) (32-34kW)	75-80		F	L	**CF375**		Ø 22,22	
	75-1/76		F	R	**CF369**		Ø 20,64	
	75-80		F	R	**CF376**		Ø 22,22	
	75-80		R		**CF358**		Ø 17,78	
	75-1/76		R		**CF196**		Ø 19,05	
	2/76-80		R		**CF076**		Ø 20,64	
1.3 Eng.J3/ KL13H (51kW)	3/76-80		F	L	**CF375**		Ø 22,22	
	75-1/76		F	R	**CF369**		Ø 20,64	
	3/76-80		F	R	**CF376**		Ø 22,22	
	75-1/76		R		**CF358**		Ø 17,78	
	75-80		R		**CF196**		Ø 19,05	
	3/76-80		R		**CF076**		Ø 20,64	
1.3, SW Eng.J1F/ K13L (40kW)	3/76-80		F	L	**CF375**		Ø 22,22	
	75-1/76		F	R	**CF369**		Ø 20,64	
	3/76-80		F	R	**CF376**		Ø 22,22	
	75-1/76		R		**CF358**		Ø 17,78	
	75-80		R		**CF196**		Ø 19,05	
	3/76-80		R		**CF076**		Ø 20,64	

FORD EUROPE

		Spare Parts	F/R	L/R	FRITECH ref.		DIMENSIONS mm.	NOTE
1.6 Eng.LC (62kW)	75-1/76		F	R	**CF369**		Ø 20,64	
	75-80		R		**CF196**		Ø 19,05	
	75-1/76		R		**CF076**		Ø 20,64	
1.6 Sport Eng.L3E/ KL16G(751M) (63kW)	3/76-77		F	L	**CF375**		Ø 22,22	
	75-1/76		F	R	**CF369**		Ø 20,64	
	3/76-77		F	R	**CF376**		Ø 22,22	
	75-77		R		**CF358**		Ø 17,78	
	3/76-77		R		**CF076**		Ø 20,64	
1.8 RS Eng.KL18S (92kW)	75-77		R		**CF358**		Ø 17,78	
	76-77		R		**CF196**		Ø 19,05	
2.0 RS Heckantrieb Eng.NE (80kW)	75-80		R		**CF358**		Ø 17,78	
	75-80		R		**CF196**		Ø 19,05	
Escort III (GAA) 9/80-7/86								
1.1 Eng.GPA/ GMA/ GLB/ GLA/ GLW (43kW)	8/80-83		R		**CF075**		Ø 19,05	h. 39mm (body)
	8/80-83				**PF096**		Ø 22,00	+Servo
1.1, SW Eng.GMA/ GPA/ GLB/ GLA/ GLW (40kW)	8/80-83		R		**CF075**		Ø 19,05	h. 39mm (body)
	8/80-83				**PF096**		Ø 22,00	+Servo
1.1, SW Eng.GSB/ C/ E/ F/ G/ H (37kW)	2/84-85		R		**CF007**		Ø 17,78	
	84-		R		**CF627**		Ø 17,78	South Africa, FWD
	83-1/84		R		**CF075**		Ø 19,05	h. 39mm (body)
	2/84-85				**PF095**		Ø 22,00	+Servo
	83-1/84				**PF096**		Ø 22,00	+Servo
1.3, SW, Cabrio Eng.JPA/ C (51kW)	2/84-85		R		**CF007**		Ø 17,78	
	85-		R		**CF627**		Ø 17,78	South Africa, FWD
	8/80-1/84		R		**CF075**		Ø 19,05	h. 39mm (body)
	2/84-85				**PF095**		Ø 22,00	+Servo
	8/80-1/84				**PF096**		Ø 22,00	+Servo
1.6 Eng.LP1/ LP2/ LUA/ B/ C/ D/ H (71kW)	80-82		R		**CF075**		Ø 19,05	h. 39mm (body)
	80-82				**PF096**		Ø 22,00	+Servo
1.6 D, SW Eng.LTA/ B/ C (40kW)	2/84-85		R		**CF007**		Ø 17,78	
	84-		R		**CF627**		Ø 17,78	South Africa, FWD
	2/84-85				**PF095**		Ø 22,00	+Servo
1.6 i Eng.L4B (66kW)	7/85-		R		**CF627**		Ø 17,78	South Africa, FWD
	7/85-12/85		R		**CF007**		Ø 17,78	
	85-85		R		**CF075**		Ø 19,05	h. 39mm (body)
	85-85		R		**CF721**		Ø 19,05	h. 36mm (body)
	7/85-				**PF095**		Ø 22,00	+Servo
1.6 T. RS Eng.LHA/ LNA/ B (97kW)	84-		R		**CF627**		Ø 17,78	South Africa, FWD
	84-85		R		**CF007**		Ø 17,78	
	84-85				**PF095**		Ø 22,00	
1.6, SW, Cabrio Eng.LP1/ LP2/ LUA/ B/ C/ D/ H	2/84-85		R		**CF007**		Ø 17,78	
(58kW)	85-		R		**CF627**		Ø 17,78	South Africa, FWD
	8/80-1/84		R		**CF075**		Ø 19,05	h. 39mm (body)
	2/84-85				**PF095**		Ø 22,00	+Servo
	8/80-1/84				**PF096**		Ø 22,00	+Servo
1.6i RS Eng.LR1/ LRA/ B (85kW)	2/84-85		R		**CF007**		Ø 17,78	
	84-		R		**CF627**		Ø 17,78	South Africa, FWD
	82-1/84		R		**CF075**		Ø 19,05	h. 39mm (body)
	2/84-85				**PF095**		Ø 22,00	+Servo
	82-1/84				**PF096**		Ø 22,00	+Servo
1.6i XR3i, Cabrio Eng.LR1/ LRA/ B (77kW)	10/82-85		R		**CF007**		Ø 17,78	
	84-		R		**CF627**		Ø 17,78	South Africa, FWD
	82-85		R		**CF075**		Ø 19,05	h. 39mm (body)
	10/82-1/84				**PF096**		Ø 22,00	
	2/84-85				**PF095**		Ø 22,00	
Escort IV (GAF,AWF,ABFT) 10/85-10/90								
1.1, SW Eng.GSB/ C/ E/ F/ G/ H (37-40kW)	85-90		R		**CF721**		Ø 19,05	h. 36mm (body)
	85-90				**PF146**		Ø 22,20	
1.3 Eng.JBA (46kW)	88-90		R		**CF721**		Ø 19,05	h. 36mm (body)
	88-90		R		**CF095**		Ø 22,20	+SCS
	8/88-90				**PF147**		Ø 23,81	+ABS
	-7/88				**PF146**		Ø 22,20	
1.3, SW Eng.JLA/ B/ JBB (44kW)	2/86-90		R		**CF721**		Ø 19,05	h. 36mm (body)
	2/86-90		R		**CF095**		Ø 22,20	+SCS

		Spare Parts	F/R	L/R	FRITECH ref.		DIMENSIONS mm.	NOTE
1.3, SW Eng.JLA/ B/ JBB (44kW)	8/88-90				**PF147**		Ø 23,81	+ABS
	2/86-7/88				**PF146**		Ø 22,20	
1.3, SW Eng.JPA/ C (51kW)	86-88		R		**CF721**		Ø 19,05	h. 36mm (body)
1.4, Cabrio, SW Eng.F6D/ F6B/ FUC (54kW)	2/86-90		R		**CF721**		Ø 19,05	h. 36mm (body)
	2/86-90		R		**CF095**		Ø 22,20	+SCS
	8/88-90				**PF147**		Ø 23,81	+ABS
	2/86-7/88				**PF146**		Ø 22,20	
1.4, Cabrio, SW Eng.FUA/ B/ C/ D/ G/ H/ J (55kW)	2/86-90		R		**CF721**		Ø 19,05	h. 36mm (body)
	2/86-90		R		**CF095**		Ø 22,20	+SCS
	2/86-7/88				**PF146**		Ø 22,20	
	8/88-90				**PF147**		Ø 23,81	
1.4, SW Eng.FUAA/ FUBA (51kW)	85-90		R		**CF721**		Ø 19,05	h. 36mm (body)
	85-90		R		**CF095**		Ø 22,20	+SCS
	8/88-90				**PF147**		Ø 23,81	+ABS
	85-7/88				**PF146**		Ø 22,20	
1.6 D, SW Eng.LTA/ B/ C (40kW)	86-89		R		**CF721**		Ø 19,05	h. 36mm (body)
	86-89		R		**CF095**		Ø 22,20	+SCS
	8/88-89				**PF147**		Ø 23,81	+ABS
	2/86-7/88				**PF146**		Ø 22,20	
1.6 i, Cabrio Eng.LJB (75kW)	89-90		R		**CF721**		Ø 19,05	h. 36mm (body)
	89-90				**PF147**		Ø 23,81	+ABS
1.6 i, Cabrio, SW Eng.L4B (66kW)	2/86-90		R		**CF721**		Ø 19,05	h. 36mm (body)
	2/86-90		R		**CF095**		Ø 22,20	+SCS
	8/88-90				**PF147**		Ø 23,81	+ABS
	2/86-7/88				**PF146**		Ø 22,20	
1.6 T. RS Eng.LHA/ LNA/ B (97kW)	86-90				**PF147**		Ø 23,81	+ABS
1.6i XR3i, Cabrio Eng.LR1/ LRA/ B (77kW)	86-89		R		**CF721**		Ø 19,05	h. 36mm (body)
	86-89		R		**CF095**		Ø 22,20	+SCS
	8/88-89				**PF147**		Ø 23,81	+ABS
	2/86-7/88				**PF146**		Ø 22,20	
1.6i, 16v Eng.LUG/ K/ J (66kW)	89-90		R		**CF721**		Ø 19,05	h. 36mm (body)
	89-90		R		**CF095**		Ø 22,20	+SCS
	89-90				**PF147**		Ø 23,81	+ABS
1.8 D, SW Eng.RTA/ B/ C/ D/ E/ F/ G/ H/ J/ K (44kW)	89-90		R		**CF721**		Ø 19,05	h. 36mm (body)
	89-90		R		**CF095**		Ø 22,20	+SCS
	89-90				**PF147**		Ø 23,81	+ABS
Escort V (GAL) 7/90-12/92								
1.3, SW Eng.J4B/ J6A (44kW)	90-92		R		**CF085**	Luc	Ø 20,64	-ABS
	90-92		R		**CF095**		Ø 22,20	+ABS
	90-92				**PF148**	Bdx	Ø 23,81	Alu
1.4, Cabrio, SW Eng.F6A/ B/ C/ D/ E/ F/ G (52kW)	90-92		R		**CF085**	Luc	Ø 20,64	
	90-92		R		**CF095**		Ø 22,20	+ABS
	90-92				**PF148**	Bdx	Ø 23,81	Alu
1.6i, 16v Eng.LUG/ K/ J (66kW)	90-92		R		**CF721**		Ø 19,05	h. 36mm (body), -SCS
	90-92		R		**CF095**		Ø 22,20	+SCS
1.6i, Cabrio, SW Eng.LJF (77kW)	90-12/92		R		**CF085**	Luc	Ø 20,64	-ABS
	90-12/92				**PF149**	Bdx	Ø 25,40	Alu
1.8 16v XR3i, Cabrio Eng.RQB/ C (96kW)	1/92-12/92		R		**CF721**		Ø 19,05	h. 36mm (body)
	1/92-12/92				**PF148**	Bdx	Ø 23,81	Alu
1.8 D, SW Eng.RTA/ B/ C/ D/ E/ F/ G/ H/ J/ K (44kW)	90-92		R		**CF721**		Ø 19,05	Exc. SW,h. 36mm (body)
	90-92		R		**CF095**		Ø 22,20	Only SW
	90-12/92				**PF149**	Bdx	Ø 25,40	Alu
1.8i 16v XR3i, Cabrio, SW Eng.RDA/ B (77kW)	1/92-12/92		R		**CF721**		Ø 19,05	h. 36mm (body)
	1/92-12/92				**PF148**	Bdx	Ø 23,81	Alu
Escort VI (GAL) 9/92-1/95								
1.3, SW Eng.J4B/ J6A (44kW)	92-95		R		**CF085**	Luc	Ø 20,64	
	92-95		R		**CF095**		Ø 22,20	+ABS
	92-95				**PF148**	Bdx	Ø 23,81	Alu
1.4 Eng.FUH (55kW)	94-95		R		**CF085**	Luc	Ø 20,64	
	94-95				**PF148**	Bdx	Ø 23,81	Alu
1.4, Cabrio, SW Eng.F4A/ B (55kW)	93-95		R		**CF085**	Luc	Ø 20,64	
	93-95		R		**CF721**		Ø 19,05	SW,h. 36mm (body)
	93-95				**PF148**	Bdx	Ø 23,81	Alu

		Spare Parts	F/R	L/R	FRITECH ref.		DIMENSIONS mm.	NOTE
1.4, Cabrio, SW Eng.F6A/ B/ C/ D/ E/ F/ G (52kW)	92-95		R		**CF085**	Luc	Ø 20,64	
	92-95		R		**CF721**		Ø 19,05	SW,h. 36mm (body)
	92-95				**PF148**	Bdx	Ø 23,81	Alu
1.6i 16v, Cabrio, SW Eng.L1E/ F/ G/ H/ J/ K/ L/ N/ Q (65-66kW)	01/94-12/94		R		**CF095**	Luc	Ø 22,20	
	94-95		R		**CF721**		Ø 19,05	h. 36mm (body)
	94-95				**PF149**	Bdx	Ø 25,40	Alu
1.8 16v XR3i, Cabrio, SW Eng.RQB/ C (96kW)	01/94-12/94		R		**CF095**	Luc	Ø 22,20	
	92-95		R		**CF721**		Ø 19,05	h. 36mm (body)
	92-95				**PF148**	Bdx	Ø 23,81	Alu
1.8 D, SW Eng.RTA/ B/ C/ D/ E/ F/ G/ H/ J/ K (44kW)	92-95		R		**CF721**		Ø 19,05	Exc. SW,h. 36mm (body)
	92-95		R		**CF095**		Ø 22,20	Only SW
	7/93-95				**PF148**	Bdx	Ø 23,81	Alu
	1/95-8/95				**PF308**		Ø 23,81	Alu, -ABS
1.8 TD, SW Eng.RFA/ B/ D/ K/ L/ M/ N/ S (66kW)	7/93-12/94		R		**CF721**		Ø 19,05	Exc. SW,h. 36mm (body)
	7/93-12/94				**PF148**	Bdx	Ø 23,81	Alu, Exc. SW
1.8i 16v, Cabrio, SW Eng.RDA/ B (77kW)	01/94-12/94		R		**CF095**	Luc	Ø 22,20	
	93-95		R		**CF721**		Ø 19,05	h. 36mm (body)
	93-95				**PF149**	Bdx	Ø 25,40	Alu
2.0 RS Cosworth 4WD Eng.N5F (162kW)	11/92-95				**PF148**	Bdx	Ø 23,81	Alu
Escort VII (GAL,AAL,ABL) 1/95-8/00								
1.3, SW Eng.J4B/ J6A (44kW)	95-98		R		**CF085**	Luc	Ø 20,64	-ABS
	95-98		R		**CF095**		Ø 22,20	+ABS
	95-98				**PF305**		Ø 23,81	+ABS
	8/95-10/98				**PF308**		Ø 23,81	Alu, -ABS
1.4, Cabrio, SW Eng.F4A/ B/ FUH (55kW)	95-98		R		**CF085**	Luc	Ø 20,64	-ABS
	95-99		R		**CF085**	Luc	Ø 20,64	-ABS
	95-98		R		**CF095**		Ø 22,20	+ABS
	9/95-98		R		**CF721**		Ø 19,05	SW,h. 36mm (body)
	95-98				**PF305**		Ø 23,81	+ABS
	8/95-10/98				**PF308**		Ø 23,81	Alu, -ABS
1.6 Eng.L1K (70kW)	95-98		R		**CF085**	Luc	Ø 20,64	-ABS
1.6i 16v, Cabrio, SW, 4WD Eng.L1E/ F/ G/ H/ J/ K/ L/ N/ Q (65-66kW)	95-98		R		**CF085**	Luc	Ø 20,64	-ABS
	95-98		R		**CF095**		Ø 22,20	+ABS
	95-98		R		**CF075**		Ø 19,05	Mod. XR3i, h. 39mm (body)
	95-98		R		**CF721**		Ø 19,05	h. 36mm (body)
	95-98				**PF305**		Ø 23,81	+ABS
	8/95-10/98				**PF308**		Ø 23,81	Alu, -ABS
1.8 16v, Cabrio, SW Eng.RKC (85kW)	95-98		R		**CF085**	Luc	Ø 20,64	-ABS
	95-98		R		**CF095**		Ø 22,20	+ABS
	95-98		R		**CF721**		Ø 19,05	h. 36mm (body)
	95-98				**PF305**		Ø 23,81	+ABS
	95-98				**PF308**		Ø 23,81	Alu, -ABS
1.8 D, SW Eng.RTA/ B/ C/ D/ E/ F/ G/ H/ J/ K (44kW)	95-96		R		**CF085**	Luc	Ø 20,64	-ABS
	95-96		R		**CF095**		Ø 22,20	+ABS
	95-96		R		**CF721**		Ø 19,05	h. 36mm (body), -ABS
	95-96				**PF305**		Ø 23,81	+ABS
	95-96				**PF308**		Ø 23,81	Alu, -ABS
1.8 TD, Cabrio, SW Eng.RFA/ B/ D/ K/ L/ M/ N/ S (66kW)	95-98		R		**CF085**	Luc	Ø 20,64	-ABS
	95-98		R		**CF085**	Luc	Ø 20,64	-ABS
	95-98		R		**CF095**		Ø 22,20	+ABS
	95-98		R		**CF721**		Ø 19,05	h. 36mm (body)
	95-98				**PF305**		Ø 23,81	+ABS
	8/95-10/98				**PF308**		Ø 23,81	Alu, -ABS
1.8 TD, Cabrio, SW Eng.RVA (51kW)	95-98		R		**CF085**	Luc	Ø 20,64	-ABS
	95-98		R		**CF085**	Luc	Ø 20,64	-ABS
	95-98		R		**CF095**		Ø 22,20	+ABS
	95-98		R		**CF721**		Ø 19,05	h. 36mm (body)
	95-98				**PF305**		Ø 23,81	+ABS
	8/95-10/98				**PF308**		Ø 23,81	Alu, -ABS
1.8i 16v, Cabrio, SW Eng.RDA/ B (77kW)	01/95-08/95		R		**CF085**	Luc	Ø 20,64	-ABS
	01/95-08/95		R		**CF095**		Ø 22,20	+ABS
	1/95-8/95		R		**CF721**		Ø 19,05	h. 36mm (body)
	1/95-8/95				**PF305**		Ø 23,81	+ABS
	1/95-8/95				**PF308**		Ø 23,81	Alu, -ABS

		Spare Parts	F/R	L/R	FRITECH ref.		DIMENSIONS mm.	NOTE
Escort VIII (AAL,ABL) 10/98-7/00								
1.6i 16v, SW Eng.L1E/ F/ G/ H/ J/ K/ L/ N/ Q (66kW)	98-00		R		**CF085**	Luc	Ø 20,64	-ABS
	98-00		R		**CF095**		Ø 22,20	+ABS
	98-00				**PF305**		Ø 23,81	+ABS
	98-00				**PF308**		Ø 23,81	Alu, -ABS
1.8 TD, SW Eng.RFA/ B/ D/ K/ L/ M/ N/ S (66kW)	98-00		R		**CF721**		Ø 19,05	h. 36mm (body)
	98-2/99				**PF305**		Ø 23,81	+ABS
	98-2/99				**PF308**		Ø 23,81	Alu, -ABS
Fiesta I 5/76-8/83								
0.95 Eng.TKA/ W/ BL09L/ H (29kW)	76-8/83		R		**CF003**		Ø 15,00	-CF
	76-8/83		R		**CF356**		Ø 17,50	+CF
	76-83				**PF087**		Ø 19,05	+Servo
	76-83				**PF107**		Ø 19,05	+Servo
0.95 Eng.TLA/ BL09L/ H (33kW)	76-8/83		R		**CF003**		Ø 15,00	-CF
	76-8/83		R		**CF356**		Ø 17,50	+CF
	76-83				**PF087**		Ø 19,05	+Servo
	76-83				**PF107**		Ø 19,05	+Servo
1.1 Eng.GMA/ GPA/ GLB/ GLA/ GLW (39kW)	76-8/83		R		**CF003**		Ø 15,00	-CF
	76-8/83		R		**CF356**		Ø 17,50	+CF
	76-83				**PF087**		Ø 19,05	+Servo
	76-83				**PF107**		Ø 19,05	+Servo
1.3 Eng.J3E (49kW)	77-8/83		R		**CF003**		Ø 15,00	-CF
	77-8/83		R		**CF356**		Ø 17,50	+CF
	77-83				**PF087**		Ø 19,05	+Servo
	77-83				**PF107**		Ø 19,05	+Servo
1.6 XR2 Eng.L3E/ KL16G(751M) (63kW)	7/81-7/83		R		**CF486**		Ø 19,05	
	7/81-7/83				**PF096**		Ø 22,00	
Fiesta II (FBD) 9/83-11/89								
1.0 Eng.TKB (33kW)	83-89		R		**CF006**		Ø 17,46	
	83-89				**PF108**		Ø 20,64	+Servo, RHD
	83-89				**PF121**		Ø 20,64	+Servo, LHD
1.1 Eng.GSB/ C/ E/ F/ G/ H (37kW)	83-89		R		**CF006**		Ø 17,46	
	83-89				**PF108**		Ø 20,64	+Servo, RHD
	83-89				**PF121**		Ø 20,64	+Servo, LHD
1.3 Eng.JPA/ C (51kW)	83-87		R		**CF006**		Ø 17,46	
	83-87				**PF108**		Ø 20,64	+Servo, RHD
	83-87				**PF121**		Ø 20,64	+Servo, LHD
1.4 Eng.F6A/ B/ C/ D/ E/ F/ G (52kW)	86-89		R		**CF006**		Ø 17,46	
	86-89				**PF108**		Ø 20,64	+Servo, RHD
	86-89				**PF121**		Ø 20,64	+Servo, LHD
1.4 Eng.FUA/ B/ C/ D/ G/ H/ J (54kW)	87-89		R		**CF006**		Ø 17,46	
	87-89				**PF108**		Ø 20,64	+Servo, RHD
	87-89				**PF121**		Ø 20,64	+Servo, LHD
1.4 Eng.FUB (55kW)	85-89		R		**CF006**		Ø 17,46	
	85-89				**PF108**		Ø 20,64	+Servo, RHD
	85-89				**PF121**		Ø 20,64	+Servo, LHD
1.6 D Eng.LTB (40kW)	3/84-89		R		**CF082**		Ø 15,00	
	3/84-89				**PF108**		Ø 20,64	+Servo, RHD
	3/84-89				**PF121**		Ø 20,64	+Servo, LHD
1.6 XR2 Eng.LP1/ LP2/ LUA/ B/ C/ D/ H (70kW)	3/84-89		R		**CF108**		Ø 20,64	
	3/84-4/84				**PF107**		Ø 19,05	
	5/84-4/85				**PF145**		Ø 22,20	RHD
Fiesta III (GFJ) 1/89-12/95								
1.0 Eng.TLB (33kW)	2/89-4/95		R		**CF071**		Ø 17,46	-SCS
	2/89-4/91		R		**CF186**		Ø 22,00	+SCS
1.1 Eng.GUD/ E (40kW)	94-12/95		R		**CF124**		Ø 19,05	-ABS
	2/89-4/95		R		**CF071**		Ø 17,46	-SCS
	2/92-94		R		**CF109**		Ø 19,05	-SCS
	2/89-12/95		R		**CF186**		Ø 22,00	+SCS
1.1i Eng.G6A (37kW)	94-12/95		R		**CF124**		Ø 19,05	-ABS
	2/89-4/95		R		**CF071**		Ø 17,46	-SCS
	2/92-94		R		**CF109**		Ø 19,05	-SCS
	2/89-12/95		R		**CF186**		Ø 22,00	+SCS

FORD EUROPE

		Spare Parts	F/R	L/R	FRITECH ref.		DIMENSIONS mm.	NOTE
1.3, Kat Eng.J6B/ JBC (44kW)	91-1/94		R		**CF071**		Ø 17,46	-SCS
	1/94-8/96		R		**CF124**		Ø 19,05	-SCS
	91-12/94		R		**CF186**		Ø 22,00	+SCS
1.4 Eng.F6A/ B/ C/ D/ E/ F/ G (52kW)	2/89-95		R		**CF071**		Ø 17,46	-SCS
	1/94-12/95		R		**CF124**		Ø 19,05	-SCS
	2/89-95		R		**CF186**		Ø 22,00	+SCS
1.4 Eng.FUA/ B/ C/ D/ G/ H/ J (54kW)	2/89-95		R		**CF071**		Ø 17,46	-SCS
	1/94-12/95		R		**CF124**		Ø 19,05	-SCS
	2/89-95		R		**CF186**		Ø 22,00	+SCS
1.4 Eng.FUF (55kW)	92-96		R		**CF071**		Ø 17,46	-SCS
	1/94-8/96		R		**CF124**		Ø 19,05	-SCS
	92-96		R		**CF186**		Ø 22,00	+SCS
1.4 Kat Eng.F4A/ B (54kW)	2/89-95		R		**CF071**		Ø 17,46	-SCS
	1/94-12/95		R		**CF124**		Ø 19,05	-SCS
	2/89-95		R		**CF186**		Ø 22,00	+SCS
1.6 Eng.LP1/ LP2/ LUA/ B/ C/ D/ H (65kW)	89-12/92		R		**CF109**		Ø 19,05	-SCS
	89-94		R		**CF124**		Ø 19,05	
	89-12/92		R		**CF186**		Ø 22,00	+SCS
1.6 T. RS Eng.LHA/ LNA/ B (96kW)	90-92		R		**CF109**		Ø 19,05	-SCS
	90-92		R		**CF124**		Ø 19,05	
	90-92		R		**CF186**		Ø 22,00	+SCS
1.6 XR2i Eng.LJC (81kW)	89-12/92		R		**CF109**		Ø 19,05	-SCS
	89-94		R		**CF124**		Ø 19,05	
	89-12/92		R		**CF186**		Ø 22,00	+SCS
1.6 XR2i Eng.LJD (76kW)	89-12/92		R		**CF109**		Ø 19,05	-SCS
	89-94		R		**CF124**		Ø 19,05	
	89-12/92		R		**CF186**		Ø 22,00	+SCS
1.6i 16v Eng.L1E/ F/ G/ H/ J/ K/ L/ N/ Q (65kW)	94-95		R		**CF109**		Ø 19,05	-SCS
	94-95		R		**CF124**		Ø 19,05	
	94-95		R		**CF186**		Ø 22,00	+SCS
1.8 16v XR2i Eng.RQB/ C (96kW)	92-95		R		**CF186**		Ø 22,00	+ABS, +SCS
	92-95		R		**CF109**		Ø 19,05	-SCS
	92-95		R		**CF124**		Ø 19,05	
1.8 D Eng.RTA/ B/ C/ D/ E/ F/ G/ H/ J/ K (44kW)	2/89-12/95		R		**CF071**		Ø 17,46	-SCS
	2/89-12/95		R		**CF186**		Ø 22,00	+SCS
1.8 TD Eng.RFA/ B/ D/ K/ L/ M/ N/ S (57kW)	93-95		R		**CF186**		Ø 22,00	+ABS, +SCS
	93-95		R		**CF071**		Ø 17,46	-SCS
1.8i 16v Eng.RDA/ B (77kW)	92-95		R		**CF186**		Ø 22,00	+ABS, +SCS
	92-95		R		**CF109**		Ø 19,05	-SCS
	92-95		R		**CF124**		Ø 19,05	
Fiesta IV (JA, JB) 8/95-1/02								
1.0 i Eng.ZH10JRB (38kW)	97-99		R		**CF786**		Ø 17,78	M/T
	97-99		R		**CF721**		Ø 19,05	h. 36mm (body), A/T
	97-99				**PF394**	Trw	Ø 23,81	+ABS
	97-99				**PF397**	Trw	Ø 23,81	-ABS
	9/98-				**PZ119**		Ø 19,05	Pla
1.0 i (48kW)	2/00-		R		**CF581**	Loc	Ø 19,05	Alu, M/T
	99-1/00		R		**CF786**		Ø 17,78	M/T
	99-		R		**CF721**		Ø 19,05	h. 36mm (body), A/T
	-2/00				**PF394**	Trw	Ø 23,81	+ABS
	-2/00				**PF397**	Trw	Ø 23,81	-ABS
	99-02				**PZ119**		Ø 19,05	Pla
1.2 i 16v Eng.DHA/ B/ C/ D/ E/ F/ G (55kW)	2/00-1/02		R		**CF581**	Loc	Ø 19,05	Alu
	96-00		R		**CF786**		Ø 17,78	M/T
	1/96-02		R		**CF721**		Ø 19,05	h. 36mm (body), A/T
	00-02				**PF983**	Ate	Ø 23,81	Alu, +ABS
	95-02				**PF307**	Trw	Ø 22,20	+ABS
	-2/00				**PF394**	Trw	Ø 23,81	+ABS
	-2/00				**PF397**	Trw	Ø 23,81	-ABS
	98-02				**PZ119**		Ø 19,05	Pla
1.3 i Eng.J4C/ L/ Q/ R/ T/ J (44kW)	2/00-1/02		R		**CF581**	Loc	Ø 19,05	Alu
	1/96-9/99		R		**CF786**		Ø 17,78	
	96-02		R		**CF095**		Ø 22,20	
	00-02				**PF983**	Ate	Ø 23,81	Alu, +ABS

		Spare Parts	F/R	L/R	FRITECH ref.		DIMENSIONS mm.	NOTE
1.3 i Eng.J4C/ L/ Q/ R/ T/ J (44kW)	95-02				**PF307**	Trw	Ø 22,20	+ABS
	-2/00				**PF394**	Trw	Ø 23,81	+ABS
	-2/00				**PF397**	Trw	Ø 23,81	-ABS
	98-02				**PZ119**		Ø 19,05	Pla
1.3 i Eng.JJA/ C/ E/ K/ J/ M (37kW)	2/00-1/02		R		**CF581**	Loc	Ø 19,05	Alu
	1/96-9/99		R		**CF786**		Ø 17,78	
	96-02		R		**CF721**		Ø 19,05	h. 36mm (body), A/T
	00-02				**PF983**	Ate	Ø 23,81	Alu, +ABS
	95-02				**PF307**	Trw	Ø 22,20	+ABS
	-2/00				**PF394**	Trw	Ø 23,81	+ABS
	-2/00				**PF397**	Trw	Ø 23,81	-ABS
	98-02				**PZ119**		Ø 19,05	Pla
1.4i 16v Eng.FHA/ D/ E/ F (66kW)	2/00-1/02		R		**CF581**	Loc	Ø 19,05	Alu
	96-00		R		**CF786**		Ø 17,78	
	96-02		R		**CF721**		Ø 19,05	h. 36mm (body), A/T
	00-02				**PF983**	Ate	Ø 23,81	Alu, +ABS
	96-02				**PF307**	Trw	Ø 22,20	+ABS
	96-				**PF394**	Trw	Ø 23,81	+ABS
	96-				**PF397**	Trw	Ø 23,81	-ABS
	98-02				**PZ119**		Ø 19,05	Pla
1.6 16v Sport Eng.L1T/ V (76kW)	00-02		R		**CF581**	Loc	Ø 19,05	Alu, M/T
	00-02		R		**CF786**		Ø 17,78	M/T
	00-02		R		**CF721**		Ø 19,05	h. 36mm (body), A/T
	00-02				**PF983**	Ate	Ø 23,81	Alu, +ABS
	00-02				**PF307**	Trw	Ø 22,20	+ABS
	00-				**PF394**	Trw	Ø 23,81	+ABS
	00-				**PF397**	Trw	Ø 23,81	-ABS
	00-02				**PZ119**		Ø 19,05	Pla
1.8 D Eng.RTA/ B/ C/ D/ E/ F/ G/ H/ J/ K (44kW)	2/00-1/02		R		**CF581**	Loc	Ø 19,05	Alu
	1/96-9/99		R		**CF786**		Ø 17,78	
	96-00		R		**CF721**		Ø 19,05	h. 36mm (body), A/T
	96-02		R		**CF095**		Ø 22,20	
	95-00				**PF307**	Trw	Ø 22,20	+ABS
	-2/00				**PF394**	Trw	Ø 23,81	+ABS
	-2/00				**PF397**	Trw	Ø 23,81	-ABS
	98-02				**PZ119**		Ø 19,05	Pla
1.8 Di Eng.RTN/ P/ Q (55kW)	2/00-1/02		R		**CF581**	Loc	Ø 19,05	Alu, M/T
	00-02		R		**CF786**		Ø 17,78	M/T
	00-02		R		**CF721**		Ø 19,05	h. 36mm (body), A/T
	-02		R		**CF095**		Ø 22,20	
	00-02				**PF983**	Ate	Ø 23,81	Alu, +ABS
	00-02				**PZ119**		Ø 19,05	Pla
Fiesta V (JH) 11/01-9/08								
1.2 16v Eng.FUJA/ B (55kW)	02-		R		**CF552**	Loc	Ø 19,05	Alu
	02-				**PF693**	Ate	Ø 23,81	Alu, +ABS, +ESP
	02-				**PF528**	Ate	Ø 23,81	Alu, +ABS, -ESP
1.2 16v Eng.M7JA/ B (51kW)	03-		R		**CF552**	Loc	Ø 19,05	Alu
	03-				**PF693**	Ate	Ø 23,81	Alu, +ABS, +ESP
	03-				**PF528**	Ate	Ø 23,81	Alu, +ABS, -ESP
1.3 Eng.A9JA/ B (51kW)	01-		R		**CF552**	Loc	Ø 19,05	Alu
	01-				**PF693**	Ate	Ø 23,81	Alu, +ABS, +ESP
	01-				**PF528**	Ate	Ø 23,81	Alu, +ABS, -ESP
1.3i Eng.BAJA (44kW)	01-		R		**CF552**	Loc	Ø 19,05	Alu
	01-				**PF693**	Ate	Ø 23,81	Alu, +ABS, +ESP
	01-				**PF528**	Ate	Ø 23,81	Alu, +ABS, -ESP
1.4 16v Eng.FXJA/ B (59kW)	11/01-		R		**CF552**	Loc	Ø 19,05	Alu
	01-				**PF693**	Ate	Ø 23,81	Alu, +ABS, +ESP
	11/01-				**PF528**	Ate	Ø 23,81	Alu, +ABS, -ESP
	11/01-				**PF531**	Ate	Ø 23,81	Alu, -ABS, -ESP
1.4 TDCi Eng.F6JA/ B/ C (50kW)	11/01-		R		**CF552**	Loc	Ø 19,05	Alu
	01-				**PF693**	Ate	Ø 23,81	Alu, +ABS, +ESP
	11/01-				**PF528**	Ate	Ø 23,81	Alu, +ABS, -ESP
	11/01-				**PF531**	Ate	Ø 23,81	Alu, -ABS, -ESP

FORD EUROPE

		Spare Parts	F/R	L/R	FRITECH ref.		DIMENSIONS mm.	NOTE
1.6 16v Eng.FYJA (74kW)	11/01-		R		**CF552**	Loc	Ø 19,05	Alu
	01-				**PF693**	Ate	Ø 23,81	Alu, +ABS, +ESP
	11/01-				**PF528**	Ate	Ø 23,81	Alu, +ABS, -ESP
1.6 TDCi Eng.HHJA/ B (66kW)	11/04-		R		**CF552**	Loc	Ø 19,05	Alu
Fiesta VI 10/08-12/12								
1.2 16v Eng.SNJA/ B (60kW)	08-		R		**CF853**	Trw	Ø 19,05	Alu
1.2 16v Eng.STJA/ B (44kW)	08-		R		**CF853**	Trw	Ø 19,05	Alu
1.4 16v Eng.SPJA/ C (71kW)	08-		R		**CF853**	Trw	Ø 19,05	Alu
1.4 LPG Eng.RTJA/B (68-71kW)	09-		R		**CF853**	Trw	Ø 19,05	Alu
1.4 TDCi Eng.F6JD/KVJA (50-52kW)	08-		R		**CF853**	Trw	Ø 19,05	Alu
1.6 Eng.HXJA, HXJB (88kW)	08-		R		**CF853**	Trw	Ø 19,05	Alu
1.6 TDCi Eng.HHJC/ D/ E (66kW)	08-		R		**CF853**	Trw	Ø 19,05	Alu
1.6 TDCi Eng.HHJF/ UBJA (55kW)	08-		R		**CF853**	Trw	Ø 19,05	Alu
1.6 TDCi Eng.TZJA/ B (70kW)	10-		R		**CF853**	Trw	Ø 19,05	Alu
1.6 Ti Eng.HDEZ (99kW)	10-		R		**CF853**	Trw	Ø 19,05	Alu
Fiesta VII 2/13-								
1.0 Eng.FDOX/ P4JA/B (59kW)	13-		R		**CF853**	Trw	Ø 19,05	Alu
1.0 Eng.XMJA/B (48kW)	13-		R		**CF853**	Trw	Ø 19,05	Alu
1.0 EcoBoost Eng.M1JE (92kW)	12-		R		**CF853**	Trw	Ø 19,05	Alu
1.0 Ecoboost Eng.SFJA/B (74kW)	13-		R		**CF853**	Trw	Ø 19,05	Alu
1.2 Eng.STJB (44kW)	13-		R		**CF853**	Trw	Ø 19,05	Alu
1.4 GPL Eng.RTJA/B (68-71kW)	13-		R		**CF853**	Trw	Ø 19,05	Alu
1.5 TDCi Eng.DS0X (55kW)	13-		R		**CF853**	Trw	Ø 19,05	Alu
1.5 TDCI (70kW)	15-		R		**CF853**	Trw	Ø 19,05	Alu, Rear Drum Brake
1.6 Eng.IQJA (77kW)	13-		R		**CF853**	Trw	Ø 19,05	Alu
1.6 ST Eng.JTJA (134kW)	13-		R		**CF853**	Trw	Ø 19,05	Alu
1.6 TDCi Eng.DS0X (70kW)	13-		R		**CF853**	Trw	Ø 19,05	Alu
Focus C-Max 10/03-4/08								
1.6 Eng.HWDA/ B (74kW)	03-08		R		**CF804**	Loc	Ø 20,64	Alu
	03-08				**PF581**	Ate	Ø 23,81	Alu, +ABS, +ESP
1.6 TDCi Eng.G8DA/ B (80kW)	03-08		R		**CF804**	Loc	Ø 20,64	Alu
	03-08				**PF581**	Ate	Ø 23,81	Alu, +ABS, +ESP
1.6 TDCi Eng.HHDA/ B (66kW)	05-08		R		**CF804**	Loc	Ø 20,64	Alu
	05-08				**PF581**	Ate	Ø 23,81	Alu, +ABS, +ESP
1.6 Ti Eng.HXDA (85kW)	04-08		R		**CF804**	Loc	Ø 20,64	Alu
	04-08				**PF581**	Ate	Ø 23,81	Alu, +ABS, +ESP
1.8 Eng.CSDA/ B (88kW)	03-08		R		**CF804**		Ø 20,64	Alu
	03-				**PF581**	Ate	Ø 23,81	Alu, +ABS, +ESP
1.8 Eng.QQDA/ B (92kW)	04-08		R		**CF804**	Loc	Ø 20,64	Alu
	04-08				**PF581**	Ate	Ø 23,81	Alu, +ABS, +ESP
1.8 Eng.QQDC (90kW)	05-07		R		**CF804**	Loc	Ø 20,64	Alu
	05-07				**PF581**	Ate	Ø 23,81	Alu, +ABS, +ESP
1.8 Flexifuel Eng.QQDA/ B (92kW)	06-08		R		**CF804**	Loc	Ø 20,64	Alu
	06-08				**PF581**	Ate	Ø 23,81	Alu, +ABS
1.8 TDCi Eng.KKDA (85kW)	05-08		R		**CF804**	Loc	Ø 20,64	Alu
	05-08				**PF581**	Ate	Ø 23,81	Alu, +ABS, +ESP
2.0 Eng.AODA/ B (107kW)	04-08		R		**CF804**	Loc	Ø 20,64	Alu
	04-08				**PF581**	Ate	Ø 23,81	Alu, +ABS, +ESP
2.0 TDCi Eng.G6DA/ B (100kW)	03-08		R		**CF804**	Loc	Ø 20,64	Alu
	03-08				**PF581**	Ate	Ø 23,81	Alu, +ABS, +ESP
Focus I, SW 10/98-10/04								
1.4 16v Eng.FXDA/ B/ C/ D (55kW)	98-		R		**CF085**	Luc	Ø 20,64	Exc. SW, -ABS
	98-		R		**CF095**		Ø 22,20	Only SW
	11/00-04				**PF604**	Ate	Ø 23,81	Alu, +ABS, +ESP
	11/00-				**PF560**	Bch	Ø 23,81	Alu, +ABS, -ESP
	98-10/00				**PF480**		Ø 23,81	Alu, +ABS, +ESP
	98-10/00				**PF479**		Ø 23,81	Alu, +ABS, -ESP
	98-				**PF247**		Ø 23,81	Alu, -ABS
	98-04				**PZ118**		Ø 19,05	Pla
1.6 16v Eng.FYDA/ B/ C/ D (74-75kW)	98-		R		**CF085**	Luc	Ø 20,64	Exc. SW, -ABS
	98-		R		**CF095**		Ø 22,20	Only SW
	11/00-04				**PF604**	Ate	Ø 23,81	Alu, +ABS, +ESP
	11/00-				**PF560**	Bch	Ø 23,81	Alu, +ABS, -ESP
	98-10/00				**PF480**		Ø 23,81	Alu, +ABS, +ESP

		Spare Parts	F/R	L/R	FRITECH ref.		DIMENSIONS mm.	NOTE
1.6 16v Eng.FYDA/ B/ C/ D (74-75kW)	98-10/00				**PF479**		Ø 23,81	Alu, +ABS, -ESP
	98-				**PF247**		Ø 23,81	Alu, -ABS
	98-04				**PZ118**		Ø 19,05	Pla
1.8 16v Eng.EYDB/ C/ D/ E/ F (85kW)	98-		R		**CF085**	Luc	Ø 20,64	Exc. SW, -ABS
	98-		R		**CF095**		Ø 22,20	Only SW
	11/00-04				**PF604**	Ate	Ø 23,81	Alu, +ABS, +ESP
	11/00-				**PF560**	Bch	Ø 23,81	Alu, +ABS, -ESP
	98-10/00				**PF480**		Ø 23,81	Alu, +ABS, +ESP
	98-10/00				**PF479**		Ø 23,81	Alu, +ABS, -ESP
	98-				**PF247**		Ø 23,81	Alu, -ABS
	98-04				**PZ118**		Ø 19,05	Pla
1.8 Di / TDDi Eng.BHDA/ B (55kW)	99-		R		**CF085**	Luc	Ø 20,64	-ABS
	99-		R		**CF721**		Ø 19,05	Exc. SW,h. 36mm (body)
	11/00-04				**PF604**	Ate	Ø 23,81	Alu, +ABS, +ESP
	11/00-				**PF560**	Bch	Ø 23,81	Alu, +ABS, -ESP
	99-10/00				**PF480**		Ø 23,81	Alu, +ABS, +ESP
	99-10/00				**PF479**		Ø 23,81	Alu, +ABS, -ESP
	99-				**PF247**		Ø 23,81	Alu, -ABS
	99-04				**PZ118**		Ø 19,05	Pla
1.8 TDCi Eng.F9DA/ B (85kW)	01-04				**PF604**	Ate	Ø 23,81	Alu, +ABS, +ESP
	01-04				**PF560**	Bch	Ø 23,81	Alu, +ABS, -ESP
	01-04				**PZ118**		Ø 19,05	Pla
1.8 TDCi Eng.FFDA (74kW)	02-04				**PF604**	Ate	Ø 23,81	Alu, +ABS, +ESP
	02-04				**PF560**	Bch	Ø 23,81	Alu, +ABS, -ESP
	02-04				**PZ118**		Ø 19,05	Pla
1.8 TDi / TDDi Eng.C9DA/ B/ C (66kW)	98-		R		**CF085**	Luc	Ø 20,64	-ABS
	98-		R		**CF721**		Ø 19,05	Exc. SW,h. 36mm (body)
	11/00-04				**PF604**	Ate	Ø 23,81	Alu, +ABS, +ESP
	11/00-				**PF560**	Bch	Ø 23,81	Alu, +ABS, -ESP
	98-10/00				**PF480**		Ø 23,81	Alu, +ABS, +ESP
	98-10/00				**PF479**		Ø 23,81	Alu, +ABS, -ESP
	98-				**PF247**		Ø 23,81	Alu, -ABS
	98-04				**PZ118**		Ø 19,05	Pla
2.0 16v Eng.EDDB/ C/ D/ F (96kW)	11/00-04				**PF604**	Ate	Ø 23,81	Alu, +ABS, +ESP
	11/00-				**PF560**	Bch	Ø 23,81	Alu, +ABS, -ESP
	98-10/00				**PF480**		Ø 23,81	Alu, +ABS, +ESP
	98-10/00				**PF479**		Ø 23,81	Alu, +ABS, -ESP
	98-				**PF247**		Ø 23,81	Alu, Exc. SW, -ABS
	98-04				**PZ118**		Ø 19,05	Pla
2.0 RS (Exc. SW) Eng.DBW (158kW)	02-04				**PZ118**		Ø 19,05	Pla
2.0 ST170 Eng.Duratec-ST (127kW)	98-04				**PZ118**		Ø 19,05	Pla
Focus II 11/04-3/08								
1.4 Eng.ASDA/ B (59kW)	04-		R		**CF804**	Loc	Ø 20,64	Alu
	04-4/07				**PF581**	Ate	Ø 23,81	Alu, +ABS
	5/07-				**PF867**	Ate	Ø 25,40	Alu, +ABS
1.6 Eng.HWDA/ B/ SHDA (74kW)	04-08		R		**CF804**	Loc	Ø 20,64	Alu
	04-4/07				**PF581**	Ate	Ø 23,81	Alu, +ABS
	5/07-				**PF867**	Ate	Ø 25,40	Alu, +ABS
1.6 TDCi Eng.G8DA/ B (80kW)	04-08		R		**CF804**	Loc	Ø 20,64	Alu
	04-4/07				**PF581**	Ate	Ø 23,81	Alu, +ABS
	04-08				**PF867**	Ate	Ø 25,40	Alu, +ABS
1.6 TDCi Eng.HHDA/ B (66kW)	05-08		R		**CF804**	Loc	Ø 20,64	Alu
	05-4/07				**PF581**	Ate	Ø 23,81	Alu, +ABS
	5/07-				**PF867**	Ate	Ø 25,40	Alu, +ABS
1.6 Ti Eng.HXDA (85kW)	04-08		R		**CF804**	Loc	Ø 20,64	Alu
	04-4/07				**PF581**	Ate	Ø 23,81	Alu, +ABS
	5/07-				**PF867**	Ate	Ø 25,40	Alu, +ABS
1.8 Eng.QQDB (92kW)	06-08		R		**CF804**	Loc	Ø 20,64	Alu
	07-11/08				**PF867**	Ate	Ø 25,40	Alu, +ABS
1.8 Flexifuel Eng.QQDA/ B (92-96kW)	06-08		R		**CF804**	Loc	Ø 20,64	Alu
	06-4/07				**PF581**	Ate	Ø 23,81	Alu, +ABS
	5/07-				**PF867**	Ate	Ø 25,40	Alu, +ABS
1.8 TDCi Eng.KKDA (85kW)	05-08		R		**CF804**	Loc	Ø 20,64	Alu
	05-4/07				**PF581**	Ate	Ø 23,81	Alu, +ABS

FORD EUROPE

		Spare Parts	F/R	L/R	FRITECH ref.		DIMENSIONS mm.	NOTE
1.8 TDCi Eng.KKDA (85kW)	5/07-				**PF867**	Ate	Ø 25,40	Alu, +ABS
2.0 Eng.AODA/ B (107kW)	04-4/07				**PF581**	Ate	Ø 23,81	Alu, +ABS
	5/07-				**PF867**	Ate	Ø 25,40	Alu, +ABS
2.0 TDCi Eng.G6DA/ B/ D (100kW)	04-08		R		**CF804**	Loc	Ø 20,64	Alu
	04-4/07				**PF581**	Ate	Ø 23,81	Alu, +ABS
	5/07-				**PF867**	Ate	Ø 25,40	Alu, +ABS
2.5 Eng.HYDA (166kW)	05-4/07				**PF581**	Ate	Ø 23,81	Alu, +ABS
	5/07-				**PF867**	Ate	Ø 25,40	Alu, +ABS
Focus II Cabrio 10/06-3/08								
1.6 Eng.HWDA/ B (74kW)	06-08		R		**CF804**	Loc	Ø 20,64	Alu
	06-4/07				**PF581**	Ate	Ø 23,81	Alu, +ABS
	5/07-				**PF867**	Ate	Ø 25,40	Alu, +ABS
2.0 Eng.AODA/ B (107kW)	06-4/07				**PF581**	Ate	Ø 23,81	Alu, +ABS
	5/07-				**PF867**	Ate	Ø 25,40	Alu, +ABS
2.0 TDCi Eng.G6DA/ B (100kW)	06-08		R		**CF804**	Loc	Ø 20,64	Alu
	06-4/07				**PF581**	Ate	Ø 23,81	Alu, +ABS
	5/07-				**PF867**	Ate	Ø 25,40	Alu, +ABS
Focus II SW 11/04-3/08								
1.4 Eng.ASDA/ B (59kW)	05-08		R		**CF804**	Loc	Ø 20,64	Alu
	05-4/07				**PF581**	Ate	Ø 23,81	Alu, +ABS
	5/07-				**PF867**	Ate	Ø 25,40	Alu, +ABS
1.6 Eng.HWDA/ B (74kW)	05-08		R		**CF804**	Loc	Ø 20,64	Alu
1.6 TDCi Eng.G8DA/ B (80kW)	05-08		R		**CF804**	Loc	Ø 20,64	Alu
1.6 TDCi Eng.HHDA/ B (66kW)	05-08		R		**CF804**	Loc	Ø 20,64	Alu
1.6 Ti Eng.HXDA (85kW)	05-08		R		**CF804**	Loc	Ø 20,64	Alu
1.8 Eng.QQDA/ B (92kW)	06-08		R		**CF804**	Loc	Ø 20,64	Alu
1.8 Flexifuel Eng.QQDA/ B (92kW)	06-08		R		**CF804**	Loc	Ø 20,64	Alu
1.8 TDCi Eng.KKDA (85kW)	05-08		R		**CF804**	Loc	Ø 20,64	Alu
2.0 TDCi Eng.G6DA/ B (100kW)	05-08		R		**CF804**	Loc	Ø 20,64	Alu
Focus III CC 4/08-4/11								
1.6 Eng.SHDA (74kW)	08-		R		**CF804**	Loc	Ø 20,64	Alu
	08-11/08				**PF867**	Ate	Ø 25,40	Alu, +ABS
2.0 TDCi Eng.G6DA/ B (100kW)	08-11/08				**PF867**	Ate	Ø 25,40	Alu, +ABS
Focus III, SW 1/08-4/11								
1.6 Eng.HDEZ (74kW)	10-		R		**CF804**	Loc	Ø 20,64	Alu
	08-11/08				**PF867**	Ate	Ø 25,40	Alu, +ABS
1.6 TDCi Eng.G8DB (80kW)	08-		R		**CF804**	Loc	Ø 20,64	Alu
	08-11/08				**PF867**	Ate	Ø 25,40	Alu, +ABS
1.6 TDCi Eng.HHDA (66kW)	08-		R		**CF804**	Loc	Ø 20,64	Alu
	08-11/08				**PF867**	Ate	Ø 25,40	Alu, +ABS
1.6 Ti, LPG Eng.HXDA (85kW)	08-		R		**CF804**	Loc	Ø 20,64	Alu
	08-11/08				**PF867**	Ate	Ø 25,40	Alu, +ABS
1.8 Eng.Q7DA/ B (92kW)	08-		R		**CF804**	Loc	Ø 20,64	Alu
	08-11/08				**PF867**	Ate	Ø 25,40	Alu, +ABS
1.8 TDCi Eng.KKDA (85kW)	08-		R		**CF804**	Loc	Ø 20,64	Alu
	08-11/08				**PF867**	Ate	Ø 25,40	Alu, +ABS
2.0 TDCi Eng.C20DD0X (81kW)	08-		R		**CF804**	Loc	Ø 20,64	Alu
	08-11/08				**PF867**	Ate	Ø 25,40	Alu, +ABS
2.0 TDCi Eng.G6DB/ D (100kW)	08-		R		**CF804**	Loc	Ø 20,64	Alu
	08-11/08				**PF867**	Ate	Ø 25,40	Alu, +ABS
2.0, CNG, LPG Eng.AODA/ B (107kW)	08-		R		**CF804**	Loc	Ø 20,64	Alu
	08-11/08				**PF867**	Ate	Ø 25,40	Alu, +ABS
2.5 T. Eng.HYDA (166kW)	08-11/08				**PF867**	Ate	Ø 25,40	Alu, +ABS
Focus IV (TA), SW 4/11-								
1.0 Ecoboost Eng.M1DA (92kW)	12-		R		**CF909**		Ø 20,64	Alu
1.0 Ecoboost Eng.M2DA (74kW)	12-		R		**CF909**		Ø 20,64	Alu
1.5 Ecoboost Eng.M8DA/DB (110kW)	14-		R		**CF909**		Ø 20,64	Alu
1.5 TDCi Eng.XWDB (88kW)	14-		R		**CF909**		Ø 20,64	Alu
1.5 TDCi Eng.XXDC (70kW)	14-		R		**CF909**		Ø 20,64	Alu
1.5 TDCi Econetic Eng.XXDB (77kW)	14-		R		**CF909**		Ø 20,64	Alu
1.6 Eng.HDEZ (92kW)	11-		R		**CF909**		Ø 20,64	Alu
1.6 Eng.IQDB (77kW)	11-		R		**CF909**		Ø 20,64	Alu
1.6 Ecoboost Eng.JQDA/B (110kW)	11-		R		**CF909**		Ø 20,64	Alu

		Spare Parts	F/R	L/R	FRITECH ref.		DIMENSIONS mm.	NOTE
1.6 EcoBoost Eng.JTDA/B (134kW)	11-		R		**CF909**		Ø 20,64	Alu
1.6 Flexifuel Eng.MUDA (88kW)	11-		R		**CF909**		Ø 20,64	Alu
1.6 TDCi Eng.T1DA/B (84kW)	11-		R		**CF909**		Ø 20,64	Alu
1.6 TDCi Eng.T3DA/B (70kW)	11-		R		**CF909**		Ø 20,64	Alu
2.0 ST Eng.DH0D (184kW)	12-		R		**CF909**		Ø 20,64	Alu
2.0 TDCi Eng.T7DB (110kW)	14-		R		**CF909**		Ø 20,64	Alu
2.0 TDCi Eng.T8DA (136kW)	14-		R		**CF909**		Ø 20,64	Alu, Rear Drum Brake
2.0 TDCi Eng.TXDB (120kW)	11-		R		**CF909**		Ø 20,64	Alu
2.0 TDCi Eng.TYDA (85kW)	11-		R		**CF909**		Ø 20,64	Alu
2.0 TDCi Eng.UKDB/UFDB (100-103kW)	11-		R		**CF909**		Ø 20,64	Alu
Electric Eng.KDDA (107kW)	13-		R		**CF909**		Ø 20,64	Alu, Rear Drum Brake
Fusion (JU) 8/02-12/12								
1.2 16v Eng.FUJA/ B (55kW)	04-		R		**CF552**	Loc	Ø 19,05	Alu
	04-				**PF693**	Ate	Ø 23,81	Alu, +ABS, +ESP
	04-				**PF528**	Ate	Ø 23,81	Alu, +ABS, -ESP
	04-				**PF531**	Ate	Ø 23,81	Alu, -ABS, -ESP
1.4 LPG Eng.UTJA (59kW)	11-		R		**CF552**		Ø 19,05	Alu
	11-				**PF693**	Ate	Ø 23,81	Alu, +ABS, +ESP
	11-				**PF528**	Ate	Ø 23,81	Alu, +ABS, -ESP
	11-				**PF531**	Ate	Ø 23,81	Alu, -ABS, -ESP
1.4 16v Eng.FXJA/ B/ C/ UTJA (59kW)	8/02-		R		**CF552**	Loc	Ø 19,05	Alu
	8/02-				**PF693**	Ate	Ø 23,81	Alu, +ABS, +ESP
	8/02-				**PF528**	Ate	Ø 23,81	Alu, +ABS, -ESP
	8/02-				**PF531**	Ate	Ø 23,81	Alu, -ABS, -ESP
1.4 TDCi Eng.F6JA/ B (50kW)	8/02-		R		**CF552**	Loc	Ø 19,05	Alu
	8/02-				**PF693**	Ate	Ø 23,81	Alu, +ABS, +ESP
	8/02-				**PF528**	Ate	Ø 23,81	Alu, +ABS, -ESP
	8/02-				**PF531**	Ate	Ø 23,81	Alu, -ABS, -ESP
1.6 16v Eng.FYJA/ B (74kW)	8/02-		R		**CF552**	Loc	Ø 19,05	Alu
	8/02-				**PF693**	Ate	Ø 23,81	Alu, +ABS, +ESP
	8/02-				**PF528**	Ate	Ø 23,81	Alu, +ABS, -ESP
	8/02-				**PF531**	Ate	Ø 23,81	Alu, -ABS, -ESP
1.6 TDCi Eng.HHJA/ B (66kW)	04-		R		**CF552**	Loc	Ø 19,05	Alu
	04-				**PF693**	Ate	Ø 23,81	Alu, +ABS, +ESP
	04-				**PF528**	Ate	Ø 23,81	Alu, +ABS, -ESP
	04-				**PF531**	Ate	Ø 23,81	Alu, -ABS, -ESP
Galaxy I (VX, WGR, VY) 3/95-8/06								
1.9 TDi Eng.AFN/ AVG (81kW)	9/97-				**PF822**	Ate	Ø 25,40	Alu, +ABS, +ESP
	9/97-				**PF600**	Ate	Ø 25,40	Alu, +ABS, -ESP
	8/97-9/97				**PF253**	Ate	Ø 23,81	+ABS
	8/97-9/97				**PF309**	Ate	Ø 23,81	-ABS
	8/97-4/00				**PZ091**	Fte	Ø 19,05	Alu
1.9 TDi Eng.ANU/ 1Z/ AHU (66kW)	4/00-				**PF822**	Ate	Ø 25,40	Alu, +ABS, +ESP
	4/00-				**PF600**	Ate	Ø 25,40	Alu, +ABS, -ESP
	2/96-8/97				**PF253**	Ate	Ø 23,81	+ABS
	11/95-8/97				**PF309**	Ate	Ø 23,81	-ABS
	95-06				**PZ091**	Fte	Ø 19,05	Alu
1.9 TDi Eng.ASZ (96kW)	03-				**PF822**	Ate	Ø 25,40	Alu, +ABS, +ESP
	03-				**PF600**	Ate	Ø 25,40	Alu, +ABS, -ESP
	2/03-				**PZ091**	Fte	Ø 19,05	Alu
1.9 TDi Eng.AUY (85kW)	00-				**PF822**	Ate	Ø 25,40	Alu, +ABS, +ESP
	00-				**PF600**	Ate	Ø 25,40	Alu, +ABS, -ESP
	4/00-				**PZ091**	Fte	Ø 19,05	Alu
1.9 TDi Eng.BTB (110kW)	05-06				**PF822**	Ate	Ø 25,40	Alu, +ABS, +ESP
	05-06				**PF600**	Ate	Ø 25,40	Alu, +ABS, -ESP
	05-06				**PZ091**	Fte	Ø 19,05	Alu
2.0 i Eng.NSE/ ZVSA (85kW)	4/00-				**PF822**	Ate	Ø 25,40	Alu, +ABS, +ESP
	4/00-				**PF600**	Ate	Ø 25,40	Alu, +ABS, -ESP
	11/95-8/97				**PF253**	Ate	Ø 23,81	+ABS
	11/95-8/97				**PF309**	Ate	Ø 23,81	-ABS
	95-06				**PZ091**	Fte	Ø 19,05	Alu
2.3 16v Eng.E5SB (103kW)	01-				**PF822**	Ate	Ø 25,40	Alu, +ABS, +ESP
	01-				**PF600**	Ate	Ø 25,40	Alu, +ABS, -ESP
	9/01-				**PZ091**	Fte	Ø 19,05	Alu

FORD EUROPE

		Spare Parts	F/R	L/R	FRITECH ref.		DIMENSIONS mm.	NOTE
2.3 16v Eng.Y5B/ E5SA (107kW)	4/00-				**PF822**	Ate	Ø 25,40	Alu, +ABS, +ESP
	4/00-				**PF600**	Ate	Ø 25,40	Alu, +ABS, -ESP
	1/97-8/97				**PF253**	Ate	Ø 23,81	+ABS
	1/97-8/97				**PF309**	Ate	Ø 23,81	-ABS
	97-06				**PZ091**	Fte	Ø 19,05	Alu
2.8 i V6, 4WD Eng.AAA/ AMY (128kW)	96-00				**PF253**	Ate	Ø 23,81	+ABS
	96-00				**PF309**	Ate	Ø 23,81	-ABS
	4/96-4/00				**PZ091**	Fte	Ø 19,05	Alu
2.8 V6 Eng.AYL (150kW)	4/00-				**PF822**	Ate	Ø 25,40	Alu, +ABS, +ESP
	4/00-				**PF600**	Ate	Ø 25,40	Alu, +ABS, -ESP
	4/00-				**PZ091**	Fte	Ø 19,05	Alu
Granada I (GGTL,FL), SW 1/72-8/77								
1.7 Eng.17M/ EV17L (48-51-55kW)	74-77		R		**CF075**	Luc	Ø 19,05	Exc. Denmark, Nederland, Spain, Finland, Only SW, h. 39mm (body)
1.7 Eng.17M/ EV17L (55kW)	72-75		R		**CF075**	Luc	Ø 19,05	Exc. Denmark, Nederland, Spain, Finland, Only SW, h. 39mm (body)
	72-75		R		**CF085**	Luc	Ø 20,64	
1.7, Coupe Eng.EY (48kW)	72-75		R		**CF075**	Luc	Ø 19,05	Exc. Denmark, Nederland, Spain, Finland, Only SW, h. 39mm (body)
2.0 Eng.NYP/ TL20H (66kW)	75-77		R		**CF075**	Luc	Ø 19,05	Exc. Denmark, Nederland, Spain, Finland, Only SW, h. 39mm (body)
	75-77		R		**CF007**		Ø 17,78	
	-77				**PF094**	Ate	Ø 20,64	
2.0 Eng.OHCLC (64kW)	76-77		R		**CF075**	Luc	Ø 19,05	Exc. Denmark, Nederland, Spain, Finland, Only SW, h. 39mm (body)
2.0, Coupe Eng.OHCHC/ TL20H (70-73kW)	75-77		R		**CF075**	Luc	Ø 19,05	Exc. Denmark, Nederland, Spain, Finland, Only SW, h. 39mm (body)
	75-77		R		**CF007**		Ø 17,78	
	-77				**PF094**	Ate	Ø 20,64	
2.3, Coupe Eng.YYH/ TV23 (79kW)	72-77		R		**CF075**	Luc	Ø 19,05	Exc. Denmark, Nederland, Spain, Finland, h. 39mm (body)
	72-76		R		**CF007**		Ø 17,78	
2.6 Eng.V6 (79kW)	75-77		R		**CF075**	Luc	Ø 19,05	h. 39mm (body)
	-77		R		**CF085**	Luc	Ø 20,64	
	-77				**PF094**	Ate	Ø 20,64	
2.6, Coupe Eng.UY V6 (92kW)	72-76		R		**CF075**	Luc	Ø 19,05	h. 39mm (body)
	-77		R		**CF085**	Luc	Ø 20,64	
	-77				**PF094**	Ate	Ø 20,64	
3.0, Coupe Eng.EV30H (101kW)	72-76		R		**CF075**	Luc	Ø 19,05	h. 39mm (body)
Granada II (GU), SW 8/77-8/85								
1.6 Eng.LCK (55kW)	-81		R		**CF075**	Luc	Ø 19,05	Incl.Denmark, Finland, h. 39mm (body)
	81-85		R		**CF085**	Luc	Ø 20,64	Exc. Denmark, Finland
	81-85		R		**CF095**		Ø 22,20	
1.7 Eng.17M/ EV17L (48-51-55kW)	77-79		R		**CF075**	Luc	Ø 19,05	Exc. Denmark, Nederland, Spain, Finland, Only SW, h. 39mm (body)
	79-81		R		**CF075**	Luc	Ø 19,05	Incl. Denmark, Finland, h. 39mm (body)
	77-79		R		**CF085**	Luc	Ø 20,64	Incl. Denmark, Nederland, Spain, Finland
	79-81		R		**CF085**	Luc	Ø 20,64	Exc. Denmark, Finland
1.9 D (Exc. SW) Eng.XD4.88 (40kW)	77-79		R		**CF075**	Luc	Ø 19,05	Exc. Denmark, Nederlan, Spain, Finland, h. 39mm (body)
	79-81		R		**CF075**	Luc	Ø 19,05	Incl. Denmark, Finland, h. 39mm (body)
	77-79		R		**CF085**	Luc	Ø 20,64	Incl. Denmark, Nederland, Spain, Finland
	79-85		R		**CF085**	Luc	Ø 20,64	Exc. Denmark, Finland
	81-82		R		**CF095**		Ø 22,20	
2.0 Eng.NEK (77kW)	-81		R		**CF075**	Luc	Ø 19,05	Incl. Denmark, Finland, h. 39mm (body)
	-81		R		**CF085**	Luc	Ø 20,64	Exc. Denmark, Finland
	81-85		R		**CF095**		Ø 22,20	
	-81				**PF094**	Ate	Ø 20,64	
2.0 Eng.NEP/ TL20H (74kW)	79-81		R		**CF075**	Luc	Ø 19,05	Incl. Denmark, Finland, h. 39mm (body)
	79-81		R		**CF085**	Luc	Ø 20,64	Exc. Denmark, Finland
	81-85		R		**CF095**		Ø 22,20	
	79-85				**PF094**	Ate	Ø 20,64	

		Spare Parts	F/R	L/R	FRITECH ref.		DIMENSIONS mm.	NOTE
2.0 Eng.NYP/ TL20H (66kW)	77-79		R		**CF075**	Luc	Ø 19,05	Exc. Denmark, Nederlan, Spain, Finland, h. 39mm (body)
	79-81		R		**CF075**	Luc	Ø 19,05	Incl. Denmark, Finland, h. 39mm (body)
	77-79		R		**CF085**	Luc	Ø 20,64	Incl. Denmark, Nederland, Spain, Finland
	79-85		R		**CF085**	Luc	Ø 20,64	Exc. Denmark, Finland
	81-85		R		**CF095**		Ø 22,20	
	10/77-85				**PF094**	Ate	Ø 20,64	
2.0 Eng.OHCLC (64kW)	77-79		R		**CF075**	Luc	Ø 19,05	Exc. Denmark, Nederlan, Spain, Finland, h. 39mm (body)
	77-79		R		**CF085**	Luc	Ø 20,64	Incl. Denmark, Nederland, Spain, Finland
2.1 D (Exc. SW) Eng.WTA (46kW)	77-79		R		**CF075**	Luc	Ø 19,05	Exc. Denmark, Nederlan, Spain, Finland, h. 39mm (body)
	79-81		R		**CF075**	Luc	Ø 19,05	Incl. Denmark, Finland, h. 39mm (body)
	77-79		R		**CF085**	Luc	Ø 20,64	Incl. Denmark, Nederland, Spain, Finland
	79-81		R		**CF085**	Luc	Ø 20,64	Exc. Denmark, Finland
	-77		R		**CF075**		Ø 19,05	h. 39mm (body)
	81-82		R		**CF095**		Ø 22,20	
	77-82				**PF094**	Ate	Ø 20,64	
2.3 Eng.YYH/ TV23 (79kW)	77-79		R		**CF075**	Luc	Ø 19,05	Exc. Denmark, Nederlan, Spain, Finland, h. 39mm (body)
	-79		R		**CF085**	Luc	Ø 20,64	Incl. Denmark, Nederland, Spain, Finland
2.3 Eng.YYP/ TV23 (84kW)	79-81		R		**CF075**	Luc	Ø 19,05	Incl. Denmark, Finland, h. 39mm (body)
	79-85		R		**CF085**	Luc	Ø 20,64	Exc. Denmark, Finland
	81-85		R		**CF095**		Ø 22,20	
2.3 Eng.YYU/ TV23 (82kW)	-81		R		**CF075**	Luc	Ø 19,05	Incl. Denmark, Finland, h. 39mm (body)
	81-85		R		**CF085**	Luc	Ø 20,64	Exc. Denmark, Finland
	81-85		R		**CF095**		Ø 22,20	
2.3 D Eng.XD2 Peugeut (49kW)	82-85		R		**CF085**	Luc	Ø 20,64	Exc. Denmark, Finland
	82-85		R		**CF095**		Ø 22,20	
2.5 D Eng.STP (51kW)	82-85		R		**CF085**	Luc	Ø 20,64	Exc. Denmark, Finland
	82-85		R		**CF095**		Ø 22,20	
2.8 Eng.PYA/ TV28 (99kW)	77-79		R		**CF075**	Luc	Ø 19,05	Exc. Denmark, Nederlan, Spain, Finland, h. 39mm (body)
	79-81		R		**CF075**	Luc	Ø 19,05	Incl. Denmark, Finland, h. 39mm (body)
	77-79		R		**CF085**	Luc	Ø 20,64	Incl. Denmark, Nederland, Spain, Finland
	79-85		R		**CF085**	Luc	Ø 20,64	Exc. Denmark, Finland
	81-85		R		**CF095**		Ø 22,20	
	10/77-85				**PF094**	Ate	Ø 20,64	
2.8 Eng.PYU/ TV28 (97kW)	-81		R		**CF075**	Luc	Ø 19,05	Incl. Denmar, Finland, h. 39mm (body)
	81-85		R		**CF085**	Luc	Ø 20,64	Exc. Denmark, Finland
	81-85		R		**CF095**		Ø 22,20	
2.8 i Eng.PRB/ TV28 (118kW)	77-79		R		**CF075**	Luc	Ø 19,05	Exc. Denmark, Nederlan, Spain, Finland, h. 39mm (body)
	79-81		R		**CF075**	Luc	Ø 19,05	Incl. Denmark, Finland, h. 39mm (body)
	77-79		R		**CF085**	Luc	Ø 20,64	Incl. Denmark, Nederland, Spain, Finland
	79-85		R		**CF085**	Luc	Ø 20,64	Exc. Denmark, Finland
	10/77-81				**PF094**	Ate	Ø 20,64	
2.8 i Eng.PRC/ TV28 (110kW)	82-85		R		**CF085**	Luc	Ø 20,64	Exc. Denmark, Finland
	82-85		R		**CF095**		Ø 22,20	
2.8 i Eng.PRD/ TV28 (108kW)	77-79		R		**CF075**	Luc	Ø 19,05	Exc. Denmark, Nederlan, Spain, Finland, h. 39mm (body)
	79-81		R		**CF075**	Luc	Ø 19,05	Incl. Denmark, Finland, h. 39mm (body)
	77-79		R		**CF085**	Luc	Ø 20,64	Incl. Denmark, Nederland, Spain, Finland
	79-85		R		**CF085**	Luc	Ø 20,64	Exc. Denmark, Finland
	81-85		R		**CF095**		Ø 22,20	
Ka I (RB) 9/96-11/08								
1.0 i Eng.ZH10JRB (38-48kW)	98-9/99		R		**CF786**		Ø 17,78	
	9/99-		R		**CF721**		Ø 19,05	h. 36mm (body)
	97-08				**PF490**	Trw	Ø 20,64	-ABS
	9/98-				**PZ119**		Ø 19,05	Pla
1.3 i Eng.A9JA/ B (51kW)	02-		R		**CF786**		Ø 17,78	
	02-		R		**CF721**		Ø 19,05	h. 36mm (body)
	02-				**PZ119**		Ø 19,05	Pla

FORD EUROPE

		Spare Parts	F/R	L/R	FRITECH ref.		DIMENSIONS mm.	NOTE
1.3 i Eng.J4D/ K/ M/ N/ P/ S (44kW)	96-9/99		R		**CF786**		Ø 17,78	
	9/99-		R		**CF721**		Ø 19,05	h. 36mm (body)
	96-08				**PF490**	Trw	Ø 20,64	-ABS
	98-				**PZ119**		Ø 19,05	Pla
1.3 i Eng.JJB (37kW)	96-9/99		R		**CF786**		Ø 17,78	
	9/99-		R		**CF721**		Ø 19,05	h. 36mm (body)
	96-08				**PF490**	Trw	Ø 20,64	-ABS
	98-				**PZ119**		Ø 19,05	Pla
1.3 i Eng.JJD/ F/ G/ H/ L (36kW)	98-9/99		R		**CF786**		Ø 17,78	
	9/99-		R		**CF721**		Ø 19,05	h. 36mm (body)
	98-08				**PF490**	Trw	Ø 20,64	-ABS
	98-				**PZ119**		Ø 19,05	Pla
1.6i SportKa Eng.CDB/ C (70kW)	03-		R		**CF552**	Loc	Ø 19,05	Alu
	03-				**PZ119**		Ø 19,05	Pla
Ka II (RU8) 12/08-								
1.2 8v Eng.LSED (51kW)	10-		R		**CF866**	Ap	Ø 20,64	Alu, +ABS
	08-		R		**CF067**	Bdx	Ø 20,64	+ABS
1.3 TDCi Eng.DD0X (55kW)	10-		R		**CF866**	Ap	Ø 20,64	Alu, +ABS
	08-		R		**CF067**	Bdx	Ø 20,64	+ABS
Laser 1/86-								
All models	86-		R		**CF627**		Ø 17,78	South Africa
Maverick I 2/93-4/98								
2.4 i Eng.KA24 (85-87kW)	96-		R		**CF247**		Ø 22,20	
	96-		R		**CF184**		Ø 23,81	
2.4 i Eng.KA24-E (91kW)	7/93-		R		**CF247**		Ø 22,20	
	7/93-		R		**CF184**		Ø 23,81	
2.7 TD Eng.TD27 (74kW)	7/93-		R		**CF247**		Ø 22,20	
	7/93-		R		**CF184**		Ø 23,81	
2.7 TD Eng.TD27E (92kW)	96-		R		**CF247**		Ø 22,20	
	96-		R		**CF184**		Ø 23,81	
Meteor 1/86-								
All models	86-		R		**CF627**		Ø 17,78	South Africa
Mondeo I (GBP), SW 2/93-8/96								
1.6i 16v Eng.L1E/ F/ G/ H/ J/ K/ L/ N/ Q (65kW)	6/94-7/96		R		**CF136**		Ø 22,22	Exc. SW
	6/94-7/96				**PF230**		Ø 25,40	Alu, +ABS
	94-7/96				**PF228**		Ø 25,40	-ABS
	7/94-8/96				**PZ092**		Ø 19,05	Alu
1.6i 16v Eng.L1E/ F/ G/ H/ J/ K/ L/ N/ Q (66kW)	2/93-5/94		R		**CF096**		Ø 20,64	Exc. SW
	2/93-7/96		R		**CF097**		Ø 22,22	SW
	6/94-7/96		R		**CF136**		Ø 22,22	Exc. SW
	6/94-7/96				**PF230**		Ø 25,40	Alu, +ABS
	2/93-7/96				**PF228**		Ø 25,40	-ABS
	2/93-8/96				**PZ092**		Ø 19,05	Alu
1.8 i 16v Eng.RKB (82kW)	2/93-5/94		R		**CF096**		Ø 20,64	Exc. SW
	2/93-7/96		R		**CF097**		Ø 22,22	SW
	6/94-7/96		R		**CF136**		Ø 22,22	Exc. SW
	6/94-7/96				**PF230**		Ø 25,40	Alu, +ABS
	94-7/96				**PF228**		Ø 25,40	-ABS
	7/94-8/96				**PZ092**		Ø 19,05	Alu
1.8 i 16v, 4WD Eng.RKA (85kW)	2/93-5/94		R		**CF096**		Ø 20,64	Exc. SW
	2/93-7/96		R		**CF097**		Ø 22,22	SW
	6/94-7/96		R		**CF136**		Ø 22,22	Exc. SW
	6/94-7/96				**PF230**		Ø 25,40	Alu, +ABS
	2/93-7/96				**PF228**		Ø 25,40	-ABS
	2/93-8/96				**PZ092**		Ø 19,05	Alu
1.8 TD Eng.RFA/ B/ D/ K/ L/ M/ N/ S (65-66kW)	2/93-5/94		R		**CF096**		Ø 20,64	Exc. SW
	5/93-7/96		R		**CF097**		Ø 22,22	SW
	6/94-7/96		R		**CF136**		Ø 22,22	Exc. SW
	6/94-7/96				**PF230**		Ø 25,40	Alu, +ABS
	2/93-7/96				**PF228**		Ø 25,40	-ABS
	6/93-8/96				**PZ092**		Ø 19,05	Alu
2.0 i 16v, 4WD Eng.NGA (97-100kW)	2/93-96		R		**CF096**		Ø 20,64	Exc. SW
	2/93-7/96		R		**CF097**		Ø 22,22	SW
	2/93-7/96				**PF230**		Ø 25,40	Alu, +ABS

		Spare Parts	F/R	L/R	FRITECH ref.		DIMENSIONS mm.	NOTE
2.0 i 16v, 4WD Eng.NGA (97-100kW)	2/93-7/96				**PF228**		Ø 25,40	-ABS
	2/93-8/96				**PZ092**		Ø 19,05	Alu
2.5 24v Eng.SEA (125kW)	94-96		R		**CF097**		Ø 22,22	Only SW
	94-96				**PF230**		Ø 25,40	Alu, +ABS
	94-96				**PF228**		Ø 25,40	-ABS
	7/94-8/96				**PZ092**		Ø 19,05	Alu
Mondeo II (BAP), SW 9/96-11/00								
1.6 i 16v Eng.L1L/ N/ Q (70kW)	5/98-11/00		R		**CF136**		Ø 22,22	
	5/98-11/00				**PF254**		Ø 25,40	Alu
1.6i 16v Eng.L1E/ F/ G/ H/ J/ K/ L/ N/ Q (66kW)	8/96-11/00		R		**CF136**		Ø 22,22	
	8/96-11/00				**PF254**		Ø 25,40	Alu
	9/96-11/00				**PZ092**		Ø 19,05	Alu
1.8 i Eng.RKB/ F/ H/ K/ J (85kW)	8/96-00		R		**CF097**		Ø 22,22	SW
	8/96-11/00		R		**CF136**		Ø 22,22	Exc. SW
	8/96-11/00				**PF254**		Ø 25,40	Alu
	9/96-11/00				**PZ092**		Ø 19,05	Alu
1.8 TD Eng.RFA/ B/ D/ K/ L/ M/ N/ S (66kW)	96-00		R		**CF136**		Ø 22,22	Exc. SW
	96-00		R		**CF097**		Ø 22,22	SW
	96-00				**PF254**		Ø 25,40	Alu
	96-00				**PZ092**		Ø 19,05	Alu
2.0 i Eng.NGA/ B/ C/ D (96kW)	96-00		R		**CF096**		Ø 20,64	Exc. SW
	96-00		R		**CF097**		Ø 22,22	SW
	9/96-11/00				**PF254**		Ø 25,40	Alu
	9/96-11/00				**PZ092**		Ø 19,05	Alu
2.5 24v Eng.SEA (125kW)	9/96-11/00				**PF254**		Ø 25,40	Alu
	9/96-11/00				**PZ092**		Ø 19,05	Alu
2.5 ST 200 Eng.SGA (151kW)	99-00				**PF254**		Ø 25,40	Alu
	5/99-11/00				**PZ092**		Ø 19,05	Alu
Orion I (AFD) 7/83-3/86								
1.3 Eng.JPA/ C (51kW)	5/83-86		R		**CF007**		Ø 17,78	
	3/84-86				**PF095**		Ø 22,00	
	5/83-2/84				**PF096**		Ø 22,00	
1.6 Eng.LP1/ LP2/ LUA/ B/ C/ D/ H (58kW)	5/83-86		R		**CF007**		Ø 17,78	
	3/84-86				**PF095**		Ø 22,00	
	5/83-2/84				**PF096**		Ø 22,00	
1.6 D Eng.LTA/ B/ C (40kW)	3/84-86		R		**CF007**		Ø 17,78	
	86-		R		**CF721**		Ø 19,05	h. 36mm (body)
	86-		R		**CF095**		Ø 22,20	+SCS
	3/84-86				**PF095**		Ø 22,00	
1.6i Eng.LR1/ LRA/ B (77kW)	5/83-86		R		**CF007**		Ø 17,78	
	86-		R		**CF721**		Ø 19,05	h. 36mm (body)
	86-		R		**CF095**		Ø 22,20	
	3/84-86				**PF095**		Ø 22,00	+SCS
	5/83-2/84				**PF096**		Ø 22,00	
Orion II (AFF) 12/85-7/90								
1.3 Eng.JLA/ B/ JBB (44kW)	86-90		R		**CF721**		Ø 19,05	h. 36mm (body), -SCS
	86-90		R		**CF095**		Ø 22,20	+SCS
	86-7/88				**PF095**		Ø 22,00	
	8/88-90				**PF147**		Ø 23,81	
1.3 Eng.JPA/ C (51kW)	86-		R		**CF007**		Ø 17,78	
	86-				**PF095**		Ø 22,00	
1.4 Eng.F6A/ B/ C/ D/ E/ F/ G (52kW)	86-90		R		**CF075**		Ø 19,05	h. 39mm (body)
	86-90		R		**CF721**		Ø 19,05	h. 36mm (body)
1.4 Eng.FUA/ B/ C/ D/ G/ H/ J (54kW)	86-90		R		**CF721**		Ø 19,05	h. 36mm (body), -SCS
	86-90		R		**CF095**		Ø 22,20	+SCS
	86-7/88				**PF095**		Ø 22,00	
	8/88-90				**PF147**		Ø 23,81	
1.4 Eng.FUA/ B/ C/ D/ G/ H/ J (55kW)	86-90		R		**CF721**		Ø 19,05	h. 36mm (body), -SCS
	86-90		R		**CF095**		Ø 22,20	+SCS
	86-7/88				**PF095**		Ø 22,00	
	8/88-90				**PF147**		Ø 23,81	
1.4 Kat Eng.F6D/ F6B/ FUC (54kW)	87-90		R		**CF721**		Ø 19,05	h. 36mm (body), -SCS
	87-90		R		**CF095**		Ø 22,20	+SCS
	87-7/88				**PF095**		Ø 22,00	

FORD EUROPE

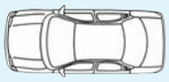		Spare Parts	F/R	L/R	FRITECH ref.		DIMENSIONS mm.	NOTE
1.4 Kat Eng.F6D/ F6B/ FUC (54kW)	8/88-90				**PF147**		Ø 23,81	
1.6 Eng.LP1/ LP2/ LUA/ B/ C/ D/ H (66kW)	85-86		R		**CF007**		Ø 17,78	
	86-90		R		**CF721**		Ø 19,05	h. 36mm (body), -SCS
	86-90		R		**CF095**		Ø 22,20	+SCS
	85-7/88				**PF095**		Ø 22,00	
	8/88-90				**PF147**		Ø 23,81	
1.6 Eng.LP2 (58kW)	86-90		R		**CF721**		Ø 19,05	h. 36mm (body), -SCS
	86-90		R		**CF095**		Ø 22,20	+SCS
1.6 D Eng.LTA/ B/ C (40kW)	85-86		R		**CF007**		Ø 17,78	
	86-89		R		**CF721**		Ø 19,05	h. 36mm (body), -SCS
	86-89		R		**CF095**		Ø 22,20	+SCS
	85-7/88				**PF095**		Ø 22,00	
	8/88-89				**PF147**		Ø 23,81	
1.6 i Eng.LJB (75kW)	89-90		R		**CF721**		Ø 19,05	h. 36mm (body), -SCS
	89-90		R		**CF095**		Ø 22,20	+SCS
	89-90				**PF147**		Ø 23,81	
1.6i Eng.LR1/ LRA/ B (77kW)	-86		R		**CF007**		Ø 17,78	
	86-90		R		**CF721**		Ø 19,05	h. 36mm (body), -SCS
	86-90		R		**CF095**		Ø 22,20	+SCS
	86-7/88				**PF095**		Ø 22,00	
	8/88-90				**PF147**		Ø 23,81	
1.6i Kat Eng.L4B (66kW)	86-90		R		**CF721**		Ø 19,05	h. 36mm (body), -SCS
	86-90		R		**CF095**		Ø 22,20	+SCS
	86-7/88				**PF095**		Ø 22,00	
	8/88-90				**PF147**		Ø 23,81	
1.8 D Eng.RTA/ B/ C/ D/ E/ F/ G/ H/ J/ K (44kW)	89-90		R		**CF721**		Ø 19,05	h. 36mm (body), -SCS
	89-90		R		**CF095**		Ø 22,20	+SCS
	89-90				**PF147**		Ø 23,81	
Orion III (GAL) 7/90-12/93								
1.3 Eng.J4B/ J6A (44kW)	90-93		R		**CF085**	Luc	Ø 20,64	-ABS
	91-93		R		**CF095**		Ø 22,20	+ABS
	90-93				**PF148**	Bdx	Ø 23,81	Alu
1.4 Eng.F6A/ B/ C/ D/ E/ F/ G (52kW)	90-93		R		**CF085**	Luc	Ø 20,64	-ABS, M/T
	91-93		R		**CF095**		Ø 22,20	+ABS
	90-93		R		**CF721**		Ø 19,05	h. 36mm (body), -ABS, A/T
	90-93				**PF148**	Bdx	Ø 23,81	Alu
1.4 Eng.F6A/ B/ C/ D/ E/ F/ G (54kW)	90-93		R		**CF085**	Luc	Ø 20,64	-ABS, M/T
	91-93		R		**CF095**		Ø 22,20	+ABS
	90-93		R		**CF721**		Ø 19,05	h. 36mm (body), -ABS, A/T
	90-93				**PF148**	Bdx	Ø 23,81	Alu
1.6i Eng.LJF (77kW)	90-92		R		**CF085**	Luc	Ø 20,64	-ABS
	90-92		R		**CF095**		Ø 22,20	+ABS
	90-92		R		**CF721**		Ø 19,05	h. 36mm (body), -ABS, A/T
	90-92				**PF148**	Bdx	Ø 23,81	Alu
1.6i 16v Eng.L1E/ F/ G/ H/ J/ K/ L/ N/ Q (66kW)	90-92		R		**CF095**		Ø 22,20	+ABS
1.6i, 16v Eng.LUG/ K/ J (66kW)	90-92		R		**CF721**	Luc	Ø 19,05	h. 36mm (body), -ABS
	90-92		R		**CF095**		Ø 22,20	+ABS
	90-92				**PF148**	Bdx	Ø 23,81	Alu
1.8 16v Eng.RQB/ C (96kW)	92-93		R		**CF095**		Ø 22,20	+ABS
	92-93		R		**CF721**		Ø 19,05	h. 36mm (body), -ABS, A/T
	92-93				**PF148**	Bdx	Ø 23,81	Alu
	6/92-93				**PF149**	Bdx	Ø 25,40	Alu
1.8 D Eng.RTA/ B/ C/ D/ E/ F/ G/ H/ J/ K (44kW)	92-93		R		**CF721**		Ø 19,05	h. 36mm (body), -ABS, A/T
	92-93		R		**CF095**		Ø 22,20	-ABS, M/T
	92-93				**PF148**	Bdx	Ø 23,81	Alu
	6/92-93				**PF149**	Bdx	Ø 25,40	Alu
1.8 TD Eng.RFA/ B/ D/ K/ L/ M/ N/ S (66kW)	3/93-12/93		R		**CF721**		Ø 19,05	h. 36mm (body), -ABS, A/T
	92-93				**PF148**	Bdx	Ø 23,81	Alu, -ABS
1.8i 16v Eng.RDA/ B (77kW)	92-93		R		**CF095**		Ø 22,20	+ABS
	92-93		R		**CF721**		Ø 19,05	h. 36mm (body), -ABS, A/T
	92-93				**PF148**	Bdx	Ø 23,81	Alu
	6/92-93				**PF149**	Bdx	Ø 25,40	Alu

		Spare Parts	F/R	L/R	FRITECH ref.		DIMENSIONS mm.	NOTE
Puma (EC) 3/97-12/01								
1.4i 16v Eng.FHA/ D/ E/ F (66kW)	3/00-10/00		R		**CF581**	Loc	Ø 19,05	Alu
	10/99-2/00		R		**CF786**		Ø 17,78	
	98-9/99		R		**CF721**		Ø 19,05	h. 36mm (body)
	-2/00				**PF394**	Trw	Ø 23,81	+ABS
	-2/00				**PF398**	Trw	Ø 23,81	-ABS
	98-				**PZ119**		Ø 19,05	Pla
1.6 16v Eng.FYJA (76kW)	8/00-12/01		R		**CF581**	Loc	Ø 19,05	Alu
	00-				**PZ119**		Ø 19,05	Pla
1.6 ST 160 (118kW)	-2/00				**PF394**	Trw	Ø 23,81	+ABS
	-2/00				**PF398**	Trw	Ø 23,81	-ABS
	99-				**PZ119**		Ø 19,05	Pla
1.7 16v Eng.MHA/ B (92kW)	3/00-12/01		R		**CF581**	Loc	Ø 19,05	Alu
	10/99-2/00		R		**CF786**		Ø 17,78	
	97-9/99		R		**CF721**		Ø 19,05	h. 36mm (body)
	-2/00				**PF394**	Trw	Ø 23,81	+ABS
	-2/00				**PF398**	Trw	Ø 23,81	-ABS
	98-				**PZ119**		Ø 19,05	Pla
Ranger II (TU, ER, EQ) 10/99-12/06								
2.5 TD 4WD Eng.WL-T (80kW)	99-		R		**CF997**		Ø 23,81	
	99-				**PF931**	Jkc	Ø 25,40	Alu
	99-				**CZ129**		Ø 19,05	
2.5 TDCi, 4WD Eng.WLAA (105kW)	99-		R		**CF997**		Ø 23,81	
	99-				**PF933**	Jkc	Ø 25,40	Alu, +ABS
	99-				**PF932**	Jkc	Ø 25,40	Alu, -ABS
2.5 TDDi, 4x4 Eng.MD25TI2 (86kW)	02-		R		**CF997**		Ø 23,81	
	02-				**PF931**	Jkc	Ø 25,40	Alu, -ABS
	02-				**CZ129**		Ø 19,05	
3.0 TDCi, 4WD Eng.WEAT (115kW)	99-		R		**CF997**		Ø 23,81	
	99-				**PF933**	Jkc	Ø 25,40	Alu, +ABS
	99-				**PF932**	Jkc	Ø 25,40	Alu, -ABS
Ranger IV (TKE) 4/10-								
2.2 TDCi Eng.GBVAJPF (88kW)	11-		R		**CF1010**		Ø 20,64	+ESP
	11-		R		**CF997**		Ø 23,81	-ESP
2.2 TDCi 4WD Eng.GBVAJQJ (110kW)	11-		R		**CF1010**		Ø 20,64	
2.2 TDCi, 4WD Eng.GBVAJQW (92kW)	11-		R		**CF1010**		Ø 20,64	
2.5 TDCi 4WD Eng.WLAA (105kW)	10-		R		**CF997**		Ø 23,81	
	10-				**PF933**	Jkc	Ø 25,40	Alu, +ABS, A/T+M/T
	10-				**PF932**	Jkc	Ø 25,40	Alu, -ABS, A/T+MT
3.0 TDCi 4WD Eng.WEAT (115kW)	10-		R		**CF997**		Ø 23,81	
	10-				**PF933**	Jkc	Ø 25,40	Alu, +ABS, A/T+M/T
	10-				**PF932**	Jkc	Ø 25,40	Alu, -ABS, A/T+MT
3.2 TDCi 4WD Eng.SAFA (147kW)	11-		R		**CF1010**		Ø 20,64	
Sierra I, SW 8/82-12/86								
1.3 (Exc. SW) Eng.JCT (44kW)	82-86		R		**CF200**		Ø 20,64	Servofreno da 8", -ABS
	82-86				**PF098**	Bdx	Ø 22,00	RHD
	82-86				**PF032**		Ø 22,00	LHD
1.6 Eng.LCS/ T/ LSD (55kW)	82-86		R		**CF085**	Luc	Ø 20,64	Servofreno da 9", -ABS
	82-86		R		**CF200**		Ø 20,64	Servofreno da 8", -ABS
	82-86		R		**CF297**		Ø 22,20	Servofreno da 8", -ABS
	82-86				**PF098**	Bdx	Ø 22,00	RHD
1.6 (51kW)	82-86		R		**CF085**	Luc	Ø 20,64	Servofreno da 9", -ABS
	82-86		R		**CF200**		Ø 20,64	Servofreno da 8", -ABS
	82-86		R		**CF297**		Ø 22,20	Servofreno da 8", -ABS
1.6 (Exc. SW) Eng.LP1/ LP2/ LUA/ B/ C/ D/ H	84-86		R		**CF085**	Luc	Ø 20,64	Servofreno da 9", -ABS
(58kW)	84-86		R		**CF200**		Ø 20,64	Servofreno da 8", -ABS
1.8 Eng.REB (66kW)	84-86		R		**CF085**	Luc	Ø 20,64	Servofreno da 9", -ABS
	84-86				**PF098**	Bdx	Ø 22,00	RHD
1.8 Eng.REB/ C/ D/ F TL18H (59kW)	84-86		R		**CF085**	Luc	Ø 20,64	Servofreno da 9", -ABS
2.0 Eng.NET/ TL20H (77kW)	82-86		R		**CF085**	Luc	Ø 20,64	Servofreno da 9", -ABS
	82-86				**PF098**	Bdx	Ø 22,00	RHD
2.0 Eng.NRD/ TL20H (74kW)	85-86		R		**CF085**	Luc	Ø 20,64	Servofreno da 9", -ABS
	85-86				**PF098**	Bdx	Ø 22,00	RHD

FORD EUROPE

		Spare Parts	F/R	L/R	FRITECH ref.		DIMENSIONS mm.	NOTE
2.0 Eng.NYT (66kW)	82-84		R		**CF085**	Luc	Ø 20,64	Servofreno da 9", -ABS
	82-84				**PF098**	Bdx	Ø 22,00	RHD
2.0 4WD Eng.N5B (150kW)	85-86		R		**CF085**	Luc	Ø 20,64	Servofreno da 9", -ABS
2.0 i Eng.NR2/ NRB/ TL20 EFi (85kW)	85-86		R		**CF085**	Luc	Ø 20,64	Servofreno da 9", -ABS
	85-86				**PF032**		Ø 22,00	LHD
2.3 Eng.YYT/ TV23 (84kW)	82-86		R		**CF085**	Luc	Ø 20,64	Servofreno da 9", -ABS
	82-86				**PF098**	Bdx	Ø 22,00	RHD
2.3 D Eng.YTR/ T (49kW)	82-86		R		**CF085**	Luc	Ø 20,64	Servofreno da 9", -ABS
	84-86				**PF098**	Bdx	Ø 22,00	RHD
	82-86				**PF032**		Ø 22,00	LHD
2.8 i XR 4WD Eng.TV28 (105-107kW)	82-86		R		**CF095**	Luc	Ø 22,20	Servofreno da 10", -ABS
2.8 XR, 4WD Eng.PRT/ TV28 (110kW)	82-86		R		**CF095**	Luc	Ø 22,20	Servofreno da 10", -ABS
	82-86		R		**CF095**		Ø 22,20	Servofreno da 10", -ABS
2.8 XR4i Eng.PR5/ TV28 (107kW)	82-86		R		**CF095**	Luc	Ø 22,20	Servofreno da 10", -ABS
2.8 XR4i Eng.PR6/ TV28 (105kW)	82-86		R		**CF095**	Luc	Ø 22,20	Servofreno da 10", -ABS
Sierra II, SW 1/87-2/93								
1.6 Eng.LSE (55kW)	87-93		R		**CF095**	Luc	Ø 22,20	Only SW; Servofreno da 10", -ABS
	87-93		R		**CF297**	Luc	Ø 22,20	Servofreno da 8", -ABS
	87-93		R		**CF200**		Ø 20,64	
	87-93				**PF098**	Bdx	Ø 22,00	RHD
	87-93				**PF032**		Ø 22,00	LHD
1.6 Eng.LSF (53kW)	88-93		R		**CF095**	Luc	Ø 22,20	Only SW; Servofreno da 10", -ABS
	88-93		R		**CF297**	Luc	Ø 22,20	Servofreno da 8", -ABS
	88-93				**PF098**	Bdx	Ø 22,00	RHD
	88-93				**PF032**		Ø 22,00	LHD
1.6 i Eng.L6B (59kW)	89-93		R		**CF095**	Luc	Ø 22,20	Only SW; Servofreno da 10", -ABS
	89-93		R		**CF297**	Luc	Ø 22,20	Servofreno da 8", -ABS
	89-93				**PF098**	Bdx	Ø 22,00	RHD
	89-93				**PF032**		Ø 22,00	LHD
1.8 Eng.R2A/ RED (66kW)	87-88		R		**CF085**	Luc	Ø 20,64	Servofreno da 9", -ABS
	87-88		R		**CF095**	Luc	Ø 22,20	Only SW; Servofreno da 10", -ABS
	87-88				**PF032**		Ø 22,00	LHD
1.8 Eng.R2C/ R6A (64kW)	88-93		R		**CF085**	Luc	Ø 20,64	Servofreno da 9", -ABS
	88-93		R		**CF095**	Luc	Ø 22,20	Only SW; Servofreno da 10", -ABS
	88-93				**PF032**		Ø 22,00	LHD
1.8 Eng.REF/ D (59kW)	87-89		R		**CF085**	Luc	Ø 20,64	Servofreno da 9", -ABS
	87-89		R		**CF095**	Luc	Ø 22,20	Only SW; Servofreno da 10", -ABS
	87-89				**PF032**		Ø 22,00	LHD
1.8 TD Eng.RFA/ B/ D/ K/ L/ M/ N/ S (55kW)	88-93		R		**CF085**	Luc	Ø 20,64	Servofreno da 9", -ABS
	88-93				**PF032**		Ø 22,00	LHD
2.0 Eng.N8C/ NES/ TL20H (77kW)	87-93		R		**CF085**	Luc	Ø 20,64	Servofreno da 9", -ABS
	87-93		R		**CF095**	Luc	Ø 22,20	Only SW; Servofreno da 10", -ABS
	87-93				**PF032**		Ø 22,00	LHD
2.0 i Eng.N4A/ I/ TL20 EFi (85kW)	87-93		R		**CF085**	Luc	Ø 20,64	Servofreno da 9", -ABS
	87-93		R		**CF095**	Luc	Ø 22,20	Only SW; Servofreno da 10", -ABS
	87-93				**PF032**		Ø 22,00	LHD
2.0 i Eng.N8A (80kW)	89-93		R		**CF085**	Luc	Ø 20,64	Servofreno da 9", -ABS
	89-93		R		**CF095**	Luc	Ø 22,20	Only SW; Servofreno da 10", -ABS
	89-93				**PF032**		Ø 22,00	LHD
2.0 i Eng.NEJ/ NE5 (74kW)	87-93		R		**CF085**	Luc	Ø 20,64	Servofreno da 9", -ABS
	87-89		R		**CF095**	Luc	Ø 22,20	Only SW; Servofreno da 10", -ABS
	87-89				**PF032**		Ø 22,00	LHD
2.0 i (Only Coda Spiovente) Eng.N9B/ C/ D/ F	89-93		R		**CF085**	Luc	Ø 20,64	Servofreno da 9", -ABS
(92kW)	89-93		R		**CF095**	Luc	Ø 22,20	Only SW; Servofreno da 10", -ABS
	89-93				**PF032**		Ø 22,00	LHD
2.0 i DOHC Eng.N9E (85kW)	91-93		R		**CF085**	Luc	Ø 20,64	Servofreno da 9", -ABS
2.0 i Kat Eng.N4B (74kW)	87-93		R		**CF085**	Luc	Ø 20,64	Servofreno da 9", -ABS
	87-93		R		**CF095**	Luc	Ø 22,20	Only SW; Servofreno da 10", -ABS
	87-93				**PF032**		Ø 22,00	LHD
2.0, 4WD Eng.N9C (88-92kW)	89-93		R		**CF085**	Luc	Ø 20,64	Servofreno da 9", -ABS
	89-93		R		**CF095**	Luc	Ø 22,20	Only SW; Servofreno da 10", -ABS
	89-93				**PF032**		Ø 22,00	LHD
2.0i Eng.N9A (90kW)	90-93		R		**CF085**	Luc	Ø 20,64	Servofreno da 9", -ABS

		Spare Parts	F/R	L/R	FRITECH ref.		DIMENSIONS mm.	NOTE
2.3 D Eng.YTR/ T (49kW)	87-89		R		**CF085**	Luc	Ø 20,64	Servofreno da 9", -ABS
	87-89		R		**CF095**	Luc	Ø 22,20	Only SW; Servofreno da 10", -ABS
	87-89				**PF032**		Ø 22,00	LHD
Street Ka 5/03-12/06								
1.6 Eng.CDB/ C (70kW)	03-		R		**CF552**	Loc	Ø 19,05	Alu
	03-				**PZ119**		Ø 19,05	Pla
Taunus 17M 8/57-4/74								
1.5, SW (40kW)	60-		R		**CF340**		Ø 17,46	
1.5, SW (44kW)	64-71		R		**CF340**		Ø 17,46	
1.7 S, SW, Coupe Eng.101 (48kW)	60-65		R		**CF340**		Ø 17,46	
1.7, Coupe, SW Eng.101 (51kW)	64-74		R		**CF340**		Ø 17,46	
1.7, SW, Coupe Eng.101 (55kW)	68-74		R		**CF340**		Ø 17,46	
1.8, SW, Coupe (60kW)	67-74		R		**CF340**		Ø 17,46	
2.0 (63kW)	67-74		R		**CF340**		Ø 17,46	
2.0, SW, Coupe (66kW)	67-74		R		**CF340**		Ø 17,46	
Taunus 20M 11/64-4/74								
2.0 TS (66kW)	64-68		R		**CF340**		Ø 17,46	
2.0, SW (63kW)	64-71		R		**CF340**		Ø 17,46	
2.0, SW, Coupe (66kW)	67-74		R		**CF340**		Ø 17,46	
2.3, Coupe, SW Eng.YYE/ TV23 (79kW)	67-74		R		**CF340**		Ø 17,46	
Taunus 20M XL 7/67-4/74								
2.0 (63kW)	68-74		R		**CF340**		Ø 17,46	
2.0, Coupe (66kW)	67-74		R		**CF340**		Ø 17,46	
2.3, Coupe Eng.YYE/ TV23 (79kW)	67-74		R		**CF340**		Ø 17,46	
Taunus 26M XL 10/69-4/74								
2.5, Coupe Eng.UY V6 (92kW)	69-74		R		**CF340**		Ø 17,46	
Taunus I (GBFK) 1/70-2/76								
1.3, SW, Coupe Eng.JAC (40-43kW)	70-		R		**CF085**	Luc	Ø 20,64	Ch -LD73180
	-75		R		**CF075**		Ø 19,05	Ch LD73181-, h. 39mm (body)
1.6, Coupe (53-65kW)	70-		R		**CF085**	Luc	Ø 20,64	Ch -LD73180
	-75		R		**CF075**		Ø 19,05	Ch LD73181-, h. 39mm (body)
1.6, SW Eng.LAD (50kW)	74-		R		**CF085**	Luc	Ø 20,64	Ch -LD73180
	-75		R		**CF075**		Ø 19,05	Ch LD73181-, h. 39mm (body)
1.6, SW, Coupe Eng.LCJ (53kW)	70-		R		**CF085**	Luc	Ø 20,64	Ch -LD73180
	-75		R		**CF075**		Ø 19,05	Ch LD73181-, h. 39mm (body)
2.0 V6, Coupe Eng.TL20H (66kW)	70-76		R		**CF007**		Ø 17,78	
2.3 V6 Coupe Eng.YYE/ TV23 (79kW)	71-76		R		**CF007**		Ø 17,78	
Taunus II (GBTS,GBFS,CBTS) 5/75-7/79								
1.3, SW Eng.JAC (40-43kW)	75-79		R		**CF355**		Ø 19,05	
	75-79				**PF094**	Ate	Ø 20,64	
1.6, SW Eng.LAD (50kW)	75-79		R		**CF355**		Ø 19,05	
	75-79				**PF094**	Ate	Ø 20,64	
1.6, SW Eng.LCJ (53kW)	75-79		R		**CF355**		Ø 19,05	
	75-79				**PF094**	Ate	Ø 20,64	
2.0, SW Eng.NYR/ TV20H (66kW)	75-79		R		**CF355**		Ø 19,05	
	75-79				**PF094**	Ate	Ø 20,64	
2.3, SW Eng.YYF/ TV23 (79kW)	75-79		R		**CF355**		Ø 19,05	
	75-79				**PF094**	Ate	Ø 20,64	
Taunus III 80 (GBS, GBNS) 7/79-7/82								
1.3, SW Eng.JCC (43kW)	79-82		R		**CF355**		Ø 19,05	
	79-82				**PF094**	Ate	Ø 20,64	
1.6, SW Eng.LAR (51kW)	79-82		R		**CF355**		Ø 19,05	
	79-82				**PF094**	Ate	Ø 20,64	
1.6, SW Eng.LCJ (54kW)	79-82		R		**CF355**		Ø 19,05	
	79-82				**PF094**	Ate	Ø 20,64	
2.0, SW Eng.NWR/ TV20H (66kW)	79-82		R		**CF355**		Ø 19,05	
	79-82				**PF094**	Ate	Ø 20,64	
2.3, SW Eng.YYR/ TV23 (84kW)	79-82		R		**CF355**		Ø 19,05	
	79-82				**PF094**	Ate	Ø 20,64	

FORD LCV

Anglia 1/65-1/67								
5-7 CWT	65-67		F	L	**CF192**		Ø 19,05	
	65-67		R		**CF335**		Ø 19,05	Alu

FORD LCV

		Spare Parts	F/R	L/R	FRITECH ref.		DIMENSIONS mm.	NOTE
Cortina 1/82-1/88								
Pick-Up P100	82-88		R		**CF614**		Ø 23,81	
Escort I Van 1/68-1/73								
1.1 Eng.G1/ KL11L/ H(751M) (28-29-32-35kW)	68-73		F	L	**CF192**		Ø 19,05	
	68-73		R		**CF335**		Ø 19,05	Alu
1.3 Eng.J1F/ K13L (42kW)	68-73		F	L	**CF192**		Ø 19,05	
	68-73		R		**CF335**		Ø 19,05	Alu
Escort II Van 1/73-1/81								
1.1 Eng.G2/ KL11L/ H(751M) (32-35kW)	76-80		F	L	**CF375**		Ø 22,22	
	76-80		F	R	**CF376**		Ø 22,22	
	76-80		R		**CF196**		Ø 19,05	
	75-80		R		**CF076**		Ø 20,64	
1.3 Eng.J1F/ K13L (40kW)	76-80		F	L	**CF375**		Ø 22,22	
	76-80		F	R	**CF376**		Ø 22,22	
	76-80		R		**CF076**		Ø 20,64	
1.3 Eng.J2/ K13L (42-45kW)	75-80		R		**CF076**		Ø 20,64	
Escort III Van (AVA) 3/81-2/86								
1.1 Eng.GSB/ C/ E/ F/ G/ H (37kW)	81-86		R		**CF095**		Ø 22,20	
1.3 Eng.JPA/ C (51kW)	81-86		R		**CF075**		Ø 19,05	h. 39mm (body)
	81-86		R		**CF721**		Ø 19,05	h. 36mm (body)
	81-86				**PF097**		Ø 20,64	
1.6 (61kW)	81-86		R		**CF095**		Ø 22,20	
	81-86				**PF097**		Ø 20,64	
1.6 D Eng.LTA/ B/ C (40kW)	84-86		R		**CF007**		Ø 17,78	
	84-86		R		**CF627**		Ø 17,78	South Africa, FWD
	84-86				**PF095**		Ø 22,00	+Servo
Escort IV Van (AVF) 2/86-7/90								
1.1 Eng.GSB/ C/ E/ F/ G/ H (37kW)	86-90		R		**CF095**		Ø 22,20	
	86-90				**PF147**		Ø 23,81	
1.3 Eng.JBA (46kW)	88-90		R		**CF095**		Ø 22,20	
	88-90				**PF147**		Ø 23,81	
1.3 Eng.JLA/ B/ JBB (44kW)	86-90		R		**CF095**		Ø 22,20	
	86-90				**PF147**		Ø 23,81	
1.4 i Eng.F6D/ F6B/ FUC (54kW)	86-90		R		**CF095**		Ø 22,20	
	86-90				**PF147**		Ø 23,81	
1.6 Eng.LUC (60kW)	86-90		R		**CF095**		Ø 22,20	
	86-90				**PF147**		Ø 23,81	
1.6 D Eng.LTA/ B/ C (40kW)	86-90		R		**CF095**		Ø 22,20	
	86-90				**PF147**		Ø 23,81	
1.8 D Eng.RTA/ B/ C/ D/ E/ F/ G/ H/ J/ K (44kW)	88-90		R		**CF095**		Ø 22,20	
	88-90				**PF147**		Ø 23,81	
Escort V Van (AVL) 7/90-12/94								
1.3 Eng.J4B/ J6A (44kW)	91-92		R		**CF095**		Ø 22,20	+ABS
	91-92		R		**CF721**		Ø 19,05	h. 36mm (body), -ABS
	91-92		R		**CF075**		Ø 19,05	h. 39mm (body)
1.3 Eng.JBD (46kW)	90-94		R		**CF095**		Ø 22,20	+ABS
	90-94		R		**CF721**		Ø 19,05	h. 36mm (body), -ABS
	90-94				**PF148**	Bdx	Ø 23,81	Alu
1.4 Eng.F6A/ B/ C/ D/ E/ F/ G (52-54kW)	90-94		R		**CF095**		Ø 22,20	+ABS
	90-94		R		**CF721**		Ø 19,05	h. 36mm (body), -ABS
	90-94				**PF148**	Bdx	Ø 23,81	Alu
1.6 Eng.LJF (77kW)	90-92		R		**CF095**		Ø 22,20	+ABS
1.6i, 16v Eng.LUG/ K/ J (66kW)	90-94		R		**CF095**		Ø 22,20	+ABS
	90-94		R		**CF721**		Ø 19,05	h. 36mm (body), -ABS
	90-94				**PF148**	Bdx	Ø 23,81	Alu
1.8 D Eng.RTH/ RTE/ RTF (44kW)	90-94		R		**CF095**		Ø 22,20	+ABS
	90-94		R		**CF721**		Ø 19,05	h. 36mm (body), -ABS
	90-94				**PF148**	Bdx	Ø 23,81	Alu
1.8 TD (55kW)	91-92		R		**CF095**		Ø 22,20	+ABS
1.8i 16v Eng.RDA/ B (77kW)	90-94		R		**CF095**		Ø 22,20	+ABS
	90-94		R		**CF721**		Ø 19,05	h. 36mm (body), -ABS
	90-94				**PF149**	Bdx	Ø 25,40	Alu

		Spare Parts	F/R	L/R	FRITECH ref.		DIMENSIONS mm.	NOTE
Escort VI Van (AVL) 1/95-8/00								
1.3 Eng.J4B/ J6A (44kW)	92-95		R		**CF085**	Luc	Ø 20,64	-ABS
	92-95		R		**CF095**		Ø 22,20	+ABS
1.4 Eng.F4A/ B/ H (54kW)	95-		R		**CF095**		Ø 22,20	
	95-98				**PF308**		Ø 23,81	Alu, -ABS
1.8 D Eng.RTA/ B/ C/ D/ E/ F/ G/ H/ J/ K (44kW)	95-		R		**CF085**	Luc	Ø 20,64	-ABS
	95-		R		**CF095**		Ø 22,20	+ABS
	95-98				**PF305**		Ø 23,81	+ABS
	95-98				**PF308**		Ø 23,81	Alu, -ABS
1.8 TD Eng.RFD/ RFK/ RFS (66kW)	7/93-12/94		R		**CF721**		Ø 19,05	Exc. SW, h. 36mm (body)
	7/93-12/94				**PF148**	Bdx	Ø 23,81	Alu, Exc. SW
1.8 TD Eng.RVA (51kW)	95-01		R		**CF095**		Ø 22,20	
	95-98				**PF305**		Ø 23,81	+ABS
	95-98				**PF308**		Ø 23,81	Alu, -ABS
Fiesta I Van 5/76-8/83								
0.95 Eng.BL09L/ H (27kW)	76-8/83		R		**CF003**		Ø 15,00	-CF
	78-8/83		R		**CF356**		Ø 17,50	+CF
	78-8/83				**PF107**		Ø 19,05	+Servo
1.1 Eng.GMA/ GPA/ GLB/ GLA/ GLW (40kW)	76-8/83		R		**CF003**		Ø 15,00	-CF
	78-8/83		R		**CF356**		Ø 17,50	+CF
	78-8/83				**PF107**		Ø 19,05	+Servo
Fiesta II Van 3/83-2/89								
1.0 Eng.BL09L/ H (29kW)	9/83-89		R		**CF006**		Ø 17,46	
	9/83-89				**PF121**		Ø 20,64	
1.1 Eng.GSB/ C/ E/ F/ G/ H (33-37-39kW)	83-89		R		**CF006**		Ø 17,46	
	83-89				**PF145**		Ø 22,20	+Servo
1.4 Eng.F6A/ B/ C/ D/ E/ F/ G (52kW)	86-89		R		**CF006**		Ø 17,46	
	86-89				**PF108**		Ø 20,64	+Servo, RHD
	86-89				**PF121**		Ø 20,64	+Servo, LHD
1.6 D Eng.LTB (40kW)	84-89		R		**CF082**		Ø 15,00	
Fiesta III Van, Courier 3/89-7/95								
1.3 Eng.J6B/ JBC (44kW)	-94		R		**CF186**		Ø 22,00	
	94-95		R		**CF095**		Ø 22,20	
	91-95				**PF148**	Bdx	Ø 23,81	Alu
1.8 D Eng.RTA/ B/ C/ D/ E/ F/ G/ H/ J/ K (44kW)	89-94		R		**CF071**		Ø 17,46	Van
	-94		R		**CF186**		Ø 22,00	Courier
	94-95		R		**CF095**		Ø 22,20	Courier
	91-95				**PF149**	Bdx	Ø 25,40	Alu, Courier
Fiesta IV Van, Courier 8/95-8/02								
1.3i Eng.BAJA/ J4C (44kW)	95-		R		**CF085**	Luc	Ø 20,64	Van, A/T
	95-		R		**CF786**		Ø 17,78	Van, M/T
	97-		R		**CF095**		Ø 22,20	Courier
	96-99				**PF603**	Ate	Ø 22,20	Alu, Van, -SCS
	-2/00				**PF394**	Trw	Ø 23,81	+ABS
	-2/00				**PF397**	Trw	Ø 23,81	-ABS
	98-02				**PZ119**		Ø 19,05	Pla
1.4 i Eng.FHA (66kW)	96-99				**PF394**	Trw	Ø 23,81	+ABS
	96-99				**PF397**	Trw	Ø 23,81	-ABS
1.8 D Eng.RTA/ B/ C/ D/ E/ F/ G/ H/ J/ K (44kW)	95-		R		**CF085**	Luc	Ø 20,64	Van, A/T
	95-		R		**CF786**		Ø 17,78	Van, M/T
	97-		R		**CF095**		Ø 22,20	Courier
	96-99				**PF603**	Ate	Ø 22,20	Alu, Van, -SCS
	-2/00				**PF394**	Trw	Ø 23,81	+ABS
	-2/00				**PF397**	Trw	Ø 23,81	-ABS
	98-02				**PZ119**		Ø 19,05	Pla
Fiesta V Van 11/01-4/08								
1.4 TDCi Eng.F6JA/ B (50kW)	11/01-		R		**CF552**	Loc	Ø 19,05	Alu
	01-				**PF693**	Ate	Ø 23,81	Alu, +ABS, +ESP
	11/01-				**PF528**	Ate	Ø 23,81	Alu, +ABS, -ESP
	11/01-				**PF531**	Ate	Ø 23,81	Alu, -ABS, -ESP
G2 Courier 1/86-								
All models	86-		R	L	**CF705**	Luc	Ø 17,46	South Africa
	86-		R	R	**CF706**	Luc	Ø 17,46	South Africa

FORD LCV

			Spare Parts	F/R	L/R	FRITECH ref.		DIMENSIONS mm.	NOTE
P 100 II 10/87-12/93									
1.8 TD Eng.RFA/ B/ D/ K/ L/ M/ N/ S (55kW)	87-92			R	L	**CF284**	Loc	Ø 23,81	
	87-92			R	R	**CF285**	Loc	Ø 23,81	
2.0 Eng.NAE (57kW)	87-93			R	L	**CF284**	Loc	Ø 23,81	
	87-93			R	R	**CF285**	Loc	Ø 23,81	
Serie A 1/73-1/83									
A0406	76-83			R		**CF163**		Ø 17,46	
All models	73-83			R		**CF208**		Ø 19,05	Exc. A0406
Thames 1/61-1/65									
5-7 CWT	61-65			F	L	**CF192**		Ø 19,05	
	63-65			R		**CF261**		Ø 17,78	Alu
	61-63			R		**CF335**		Ø 19,05	Alu
Tourneo (EBS) 1/94-12/00									
2.0i Eng.NSF/ H (85kW)	94-97			R		**CF178**	Bdx	Ø 22,20	
	94-97					**PF602**	Bch	Ø 23,81	Alu, +ABS
	94-97					**PF390**	Bch	Ø 23,81	Alu, -ABS
	94-97					**PF043**	Bdx	Ø 23,81	
2.4 D Eng.4HA (55kW)	94-00			R		**CF179**	Bdx	Ø 20,64	FT100L, FT130
	94-00					**PF602**	Bch	Ø 23,81	Alu, +ABS
	94-00					**PF390**	Bch	Ø 23,81	Alu, -ABS
2.5 D, TD Eng.4GB/ D/ A/ C/ 4HA/ B/ C (55-62kW)	94-97			R		**CF179**	Bdx	Ø 20,64	
	94-97			R		**CF180**	Bdx	Ø 25,40	FT190
	94-97					**PF602**	Bch	Ø 23,81	Alu, +ABS
	94-97					**PF390**	Bch	Ø 23,81	Alu, -ABS
	94-97					**PF043**	Bdx	Ø 23,81	
2.5 DI Eng.4FA/ B/ C/ D (51kW)	94-00			R		**CF179**	Bdx	Ø 20,64	FT80, FT100, L, FT130, FT150
	94-00			R		**CF180**	Bdx	Ø 25,40	FT190
	94-00					**PF602**	Bch	Ø 23,81	Alu, +ABS
	94-00					**PF390**	Bch	Ø 23,81	Alu, -ABS
	94-00					**PF043**	Bdx	Ø 23,81	FT80, FT100, FT130, FT150, FT190
2.5 TD Eng.4EB/ C (74kW)	98-00			R		**CF179**	Bdx	Ø 20,64	FT120, FT130, FT150
	98-00			R		**CF180**	Bdx	Ø 25,40	FT190
	98-00					**PF602**	Bch	Ø 23,81	Alu, +ABS
	98-00					**PF390**	Bch	Ø 23,81	Alu, -ABS
	98-00					**PF043**	Bdx	Ø 23,81	FT120, FT130, FT150
Tourneo Connect I 9/02-11/13									
1.8 16v Eng.EYPA (85kW)	02-			R		**CF839**	Loc	Ø 20,64	Alu, -ABS
	02-			R		**CF804**	Loc	Ø 20,64	Alu
1.8 Di Eng.BHPA (55kW)	02-			R		**CF839**	Loc	Ø 20,64	Alu, -ABS
	02-			R		**CF804**	Loc	Ø 20,64	Alu
1.8 TDCi Eng.HCPA (66kW)	02-			R		**CF839**	Loc	Ø 20,64	Alu, -ABS
	02-			R		**CF804**	Loc	Ø 20,64	Alu
1.8 TDCi Eng.RWPA (81kW)	06-			R		**CF804**	Loc	Ø 20,64	Alu
	06-			R		**CF839**		Ø 20,64	Alu, -ABS
Tourneo Courier 2/14-									
1.0 Ecoboost Eng.SFCB (74kW)	14-			R		**CF1015**	Trw	Ø 22,20	Alu
1.5 TDCi Eng.UGCA (55kW)	14-			R		**CF1015**	Trw	Ø 22,20	Alu
1.6 TDCi Eng.T3CA (70kW)	14-			R		**CF1015**	Trw	Ø 22,20	Alu
Transit I 4/55-4/67									
1.5 K-40 (40kW)	-67			F	L	**CF334**	Loc	Ø 20,32	12-17 cwt
	-67			F	R	**CF336**	Loc	Ø 20,32	12-17 cwt
	-67			F	R	**CF420**		Ø 22,20	25-30 cwt
	-67			R		**CF191**	Loc	Ø 19,05	
	-67			R		**CF424**		Ø 15,87	25 cwt
	-67			R		**CF068**		Ø 17,46	25 cwt
	-67			R		**CF348**		Ø 20,32	HDB
Transit II 1/65-9/78									
1.5 Eng.EX (44kW)	73-76			F	L	**CF387**	Loc	Ø 20,32	FT100 Chassis Cab, Parcel Van
	73-76			F	R	**CF386**	Loc	Ø 20,32	FT100 Chassis Cab, Parcel Van
	74-76			R		**CF388**	Loc	Ø 20,32	FT100 Parcel Van, HDB
	74-76			R		**CF202**	Loc	Ø 20,32	FT100 Parcel Van
	74-76					**PF119**	Loc	Ø 22,20	FT100 Parcel Van
1.6 Eng.EY (48kW)	75-76			F	L	**CF387**	Loc	Ø 20,32	FT75, FT90 (w/HDB), FT115
	75-78			F	L	**CF415**	Loc	Ø 22,20	FT125

		Spare Parts	F/R	L/R	FRITECH ref.		DIMENSIONS mm.	NOTE
1.6 Eng.EY (48kW)	75-76		F	R	**CF386**	Loc	Ø 20,32	FT75, FT90 (w/HDB), FT115
	75-78		F	R	**CF414**	Loc	Ø 22,20	FT125
	75-78		R	L	**CF524**	Loc	Ø 22,20	FT125
	75-78		R	R	**CF525**	Loc	Ø 22,20	FT125
	76-78		R		**CF388**	Loc	Ø 20,32	FT75, FT90 (w/HDB), FT115, HDB
	76-78		R		**CF202**	Loc	Ø 20,32	FT75, FT90 (w/HDB), FT115
	75-76				**PF120**	Loc	Ø 20,64	FT90 (w/HDB),FT75, FT115, +Servo
	76-78				**PF119**	Loc	Ø 22,20	FT115, FT125
1.7 Eng.EY (48kW)	75-76		F	L	**CF387**	Loc	Ø 20,32	FT75, FT90, FT115
	70-75		F	L	**CF415**	Loc	Ø 22,20	FT125
	75-76		F	R	**CF386**	Loc	Ø 20,32	FT75, FT90, FT115
	70-75		F	R	**CF414**	Loc	Ø 22,20	FT125
	76-78		R		**CF388**	Loc	Ø 20,32	FT75, FT90, FT115, HDB
	76-78		R		**CF202**	Loc	Ø 20,32	FT75, FT90, FT115
	70-75				**PF120**	Loc	Ø 20,64	FT75, FT90, FT115, FT125, +Servo
2.0 Eng.4RC (43-55-57kW)	70-78		F	L	**CF387**	Loc	Ø 20,32	FT75, FT90, FT115
	70-78		F	L	**CF415**	Loc	Ø 22,20	FT125, FT150, FT175
	70-78		F	R	**CF386**	Loc	Ø 20,32	FT75, FT90, FT115
	70-78		F	R	**CF414**	Loc	Ø 22,20	FT125, FT150, FT175
	70-78		R	L	**CF524**	Loc	Ø 22,20	FT125, FT175 (76-78) Parcel Van
	76-78		R	L	**CF275**	Loc	Ø 23,81	FT150 (Exc. Parcel Van), FT175, FT190
	70-78		R	R	**CF525**	Loc	Ø 22,20	FT125, FT175 (76-78) Parcel Van
	76-78		R	R	**CF274**	Loc	Ø 23,81	FT150 (Exc. Parcel Van), FT175, FT190
	72-76		R		**CF208**	Loc	Ø 19,05	FT150, FT175
	76-78		R		**CF388**	Loc	Ø 20,32	FT75, FT90, FT115, HDB
	76-78		R		**CF202**	Loc	Ø 20,32	FT75, FT90, FT115
	70-76				**PF120**	Loc	Ø 20,64	FT75, FT90, FT115, FT150, FT175, FT125
	76-78				**PF119**	Loc	Ø 22,20	FT90, FT115, FT125
2.0 (V4) Eng.4RC (43-55-57kW)	73-76		F	L	**CF387**	Loc	Ø 20,32	FT100 Chassis Cab, Parcel Van
	76-78		F	L	**CF415**	Loc	Ø 22,20	FT130
	73-76		F	R	**CF386**	Loc	Ø 20,32	FT100 Chassis Cab, Parcel Van
	76-78		F	R	**CF414**	Loc	Ø 22,20	FT130
	76-78		R	L	**CF524**	Loc	Ø 22,20	FT130 Van Cab
	76-78		R	L	**CF275**	Loc	Ø 23,81	FT130 Exc. Van Cab
	76-78		R	R	**CF525**	Loc	Ø 22,20	FT130 Van Cab
	76-78		R	R	**CF274**	Loc	Ø 23,81	FT130 Exc. Van Cab
	70-76		R		**CF209**	Loc	Ø 15,87	FT130
	74-78		R		**CF388**	Loc	Ø 20,32	FT100 Parcel Van, HDB
	74-78		R		**CF202**	Loc	Ø 20,32	FT100 Parcel Van
	70-76				**PF120**	Loc	Ø 20,64	FT130
	74-78				**PF119**	Loc	Ø 22,20	FT100 Parcel Van
2.4 D Eng.4AA (46kW)	72-78		F	L	**CF387**	Loc	Ø 20,32	FT75, FT90, FT115
	72-78		F	L	**CF415**	Loc	Ø 22,20	FT125, FT130, FT150, FT175
	72-78		F	R	**CF386**	Loc	Ø 20,32	FT75, FT90, FT115
	72-78		F	R	**CF414**	Loc	Ø 22,20	FT125, FT130, FT150, FT175
	76-78		R	L	**CF524**	Loc	Ø 22,20	FT125, FT130 Van Cab, FT175 Parcel Van
	76-78		R	L	**CF275**	Loc	Ø 23,81	FT130 Exc. Van Cab, FT150 Exc. Parcel Van, FT175, FT190
	76-78		R	R	**CF525**	Loc	Ø 22,20	FT125, FT130 Van Cab, FT175 Parcel Van
	76-78		R	R	**CF274**	Loc	Ø 23,81	FT130 Exc. Van Cab, FT150 Exc. Parcel Van, FT175, FT190
	72-76		R		**CF209**	Loc	Ø 15,87	FT130
	72-76		R		**CF208**	Loc	Ø 19,05	FT150, FT175
	76-78		R		**CF388**	Loc	Ø 20,32	FT75, FT90, FT115, HDB
	76-78		R		**CF202**	Loc	Ø 20,32	FT75, FT90, FT115
	72-76				**PF120**	Loc	Ø 20,64	FT75, FT90, FT115, FT130, FT150, FT175, +Servo
	76-78				**PF119**	Loc	Ø 22,20	FT90, FT115, FT125
Transit III (V) 11/77-10/86								
1.6 Eng.4RB (48kW)	77-86		F	L	**CF387**	Loc	Ø 20,32	FT80
	77-86		F	R	**CF386**	Loc	Ø 20,32	FT80
	77-86		R		**CF419**	Loc	Ø 19,05	Front Drum Brake, FT80 +Short Bleed Screw
	77-86		R		**CF202**	Loc	Ø 20,32	Front Disc Brake, FT80, FT100, FT120
	77-86				**PF120**	Loc	Ø 20,64	FT80
	77-86				**PF119**	Loc	Ø 22,20	FT100, FT120

FORD LCV

		Spare Parts	F/R	L/R	FRITECH ref.		DIMENSIONS mm.	NOTE
2.0 Eng.4RC (43-55-57kW)	77-86		F	L	**CF387**	Loc	Ø 20,32	FT80
	77-86		F	L	**CF415**	Loc	Ø 22,20	FT130
	77-86		F	R	**CF386**	Loc	Ø 20,32	FT80
	77-86		F	R	**CF414**	Loc	Ø 22,20	FT130
	77-86		R	L	**CF524**	Loc	Ø 22,20	FT130 Van Cab, FT160
	77-86		R	L	**CF275**	Loc	Ø 23,81	FT130 Exc. Van Cab, FT160, FT175, FT190
	77-86		R	R	**CF525**	Loc	Ø 22,20	FT130 Van Cab, FT160
	77-86		R	R	**CF274**	Loc	Ø 23,81	FT130 Exc. Van Cab, FT160, FT175, FT190
	77-86		R		**CF419**	Loc	Ø 19,05	Front Drum Brake, FT80 +Short Bleed Screw
	77-86		R		**CF202**	Loc	Ø 20,32	Front Disc Brake, FT 80, FT100, FT120
	77-86				**PF150**	Bdx	Ø 22,00	FT130
	77-86				**PF120**	Loc	Ø 20,64	FT80
	77-86				**PF119**	Loc	Ø 22,20	FT100, FT120
2.4 D Eng.4AA (46kW)	77-86		F	L	**CF387**	Loc	Ø 20,32	FT80
	77-86		F	L	**CF415**	Loc	Ø 22,20	FT130
	77-86		F	R	**CF386**	Loc	Ø 20,32	FT80
	77-86		F	R	**CF414**	Loc	Ø 22,20	FT130
	77-86		R	L	**CF524**	Loc	Ø 22,20	FT130 Van Cab, FT160, FT175
	77-86		R	L	**CF275**	Loc	Ø 23,81	FT130 Exc. Van Cab, FT160, FT175, FT190
	77-86		R	R	**CF525**	Loc	Ø 22,20	FT130 Van Cab, FT160, FT175
	77-86		R	R	**CF274**	Loc	Ø 23,81	FT130 Exc. Van Cab, FT160, FT175, FT190
	77-86		R		**CF419**	Loc	Ø 19,05	Front Drum Brake, FT80 +Short Bleed Screw
	77-86		R		**CF202**	Loc	Ø 20,32	Front Disc Brake, FT80, FT100, FT120
	77-86				**PF150**	Bdx	Ø 22,00	FT130, FT190
	77-86				**PF120**	Loc	Ø 20,64	FT80
	77-86				**PF119**	Loc	Ø 22,20	FT100, FT120
2.5 D Eng.4AB/ 4BA/ 4CA (50kW)	83-86		F	L	**CF387**	Loc	Ø 20,32	FT80
	83-86		F	L	**CF415**	Loc	Ø 22,20	FT130
	83-86		F	R	**CF386**	Loc	Ø 20,32	FT80
	83-86		F	R	**CF414**	Loc	Ø 22,20	FT130
	83-86		R	L	**CF524**	Loc	Ø 22,20	FT130 Van Cab, FT160
	83-86		R	L	**CF275**	Loc	Ø 23,81	FT130 Exc. Van Cab, FT160, FT190
	83-86		R	R	**CF525**	Loc	Ø 22,20	FT130 Van Cab, FT160
	83-86		R	R	**CF274**	Loc	Ø 23,81	FT130 Exc. Van Cab, FT160, FT190
	83-86		R		**CF419**	Loc	Ø 19,05	Front Drum Brake, FT80 +Short Bleed Screw
	83-86		R		**CF202**	Loc	Ø 20,32	Front Disc Brake, FT80, FT100
	83-86				**PF150**	Bdx	Ø 22,00	FT130, FT190
	83-86				**PF120**	Loc	Ø 20,64	FT80
Transit IV (T) 11/85-9/92								
1.6 Eng.LAT (46kW)	85-89		R		**CF175**	Loc	Ø 20,33	FT100, FT80
	85-89				**PF153**	Bdx	Ø 22,00	(<->), FT100, FT80
	85-89				**PF154**	Bdx	Ø 22,00	(x), FT100, FT80
	85-89				**PF036**	Bdx	Ø 23,81	(<->), FT100, FT80
	85-89				**PF037**	Bdx	Ø 23,81	(x), FT100, FT80
2.0, Kat,, 16v Eng.N6T/ NAT/ V (57kW)	85-92		R	L	**CF222**	Loc	Ø 20,33	FT130, -Servo
	85-92		R	L	**CF450**	Loc	Ø 22,20	FT100L
	85-92		R	L	**CF524**	Loc	Ø 22,20	FT130, +Servo
	85-92		R	L	**CF275**	Loc	Ø 23,81	FT130, FT190, +Servo
	85-92		R	L	**CF284**	Loc	Ø 23,81	FT160,130,100L
	85-92		R	L	**CF220**	Loc	Ø 25,40	FT160 (9p), FT190
	85-92		R	R	**CF223**	Loc	Ø 20,33	FT130, -Servo
	85-92		R	R	**CF451**	Loc	Ø 22,20	FT100L
	85-92		R	R	**CF525**	Loc	Ø 22,20	FT130, +Servo
	85-92		R	R	**CF274**	Loc	Ø 23,81	FT130, FT190, +Servo
	85-92		R	R	**CF285**	Loc	Ø 23,81	FT160,130,100L
	85-92		R	R	**CF221**	Loc	Ø 25,40	FT160 (9p), FT190
	85-92		R		**CF175**	Loc	Ø 20,33	FT100, FT120, FT80
	85-92		R		**CF219**	Loc	Ø 22,20	FT120 Bus,
	85-92				**PF151**	Bdx	Ø 22,00	(x), FT100L, FT120
	85-92				**PF153**	Bdx	Ø 22,00	(<->), FT100, FT80
	85-92				**PF154**	Bdx	Ø 22,00	(x), FT100, FT80
	85-92				**PF152**	Bdx	Ø 23,81	FT100L, FT130 (Exc. CFi), FT190
	85-92				**PF036**	Bdx	Ø 23,81	(<->), FT100, FT130 CFi, FT80
	85-92				**PF037**	Bdx	Ø 23,81	(x), FT100, FT80

		Spare Parts	F/R	L/R	FRITECH ref.		DIMENSIONS mm.	NOTE
2.5 D Eng.4AB/ 4BA/ 4CA (50-52kW)	85-92		R	L	**CF222**	Loc	Ø 20,33	FT130
	85-92		R	L	**CF450**	Loc	Ø 22,20	FT100L
	85-92		R	L	**CF524**	Loc	Ø 22,20	FT130
	85-92		R	L	**CF275**	Loc	Ø 23,81	FT130, FT190, +Servo
	85-92		R	L	**CF284**	Loc	Ø 23,81	FT130
	85-92		R	L	**CF284**	Loc	Ø 23,81	Exc. Sweden/Switzerland/Germany/Denmark/Austria, FT100L,FT160
	85-92		R	L	**CF220**	Loc	Ø 25,40	FT160 (9p), FT190
	89-92		R	R	**CF223**	Loc	Ø 20,33	FT130
	85-92		R	R	**CF451**	Loc	Ø 22,20	FT100L
	85-92		R	R	**CF525**	Loc	Ø 22,20	FT130
	85-89		R	R	**CF285**	Loc	Ø 23,81	FT130
	85-92		R	R	**CF274**	Loc	Ø 23,81	FT130, FT190, +Servo
	85-92		R	R	**CF285**	Loc	Ø 23,81	Exc. Sweden/Switzerland/Germany/Denmark/Austria, FT100L,FT160, 5/8p
	85-92		R	R	**CF221**	Loc	Ø 25,40	FT160 (9p), FT190
	85-92		R		**CF219**	Loc	Ø 22,20	FT120 Bus,
	85-92				**PF151**	Bdx	Ø 22,00	(x), FT80
	85-92				**PF152**	Bdx	Ø 23,81	FT130
	85-92				**PF043**	Bdx	Ø 23,81	FT80
2.5 TD Eng.D25 (58kW)	88-92		R	L	**CF222**	Loc	Ø 20,33	FT130
	88-92		R	L	**CF524**	Loc	Ø 22,20	FT130, +Servo
	88-92		R	L	**CF525**	Loc	Ø 22,20	FT130, +Servo
	88-89		R	L	**CF284**	Loc	Ø 23,81	FT130,FT160
	88-92		R	L	**CF275**	Loc	Ø 23,81	FT130, FT190, +Servo
	88-92		R	L	**CF220**	Loc	Ø 25,40	FT160 (9p), FT190
	89-92		R	R	**CF223**	Loc	Ø 20,33	FT130
	86-89		R	R	**CF285**	Loc	Ø 23,81	FT130,FT160
	88-92		R	R	**CF274**	Loc	Ø 23,81	FT130, FT190, +Servo
	88-92		R	R	**CF221**	Loc	Ø 25,40	FT160 (9p), FT190
	88-92		R		**CF219**	Loc	Ø 22,20	FT120 Bus,
	88-92				**PF153**	Bdx	Ø 22,00	(<->), FT100, FT80
	88-92				**PF154**	Bdx	Ø 22,00	(x), FT100, FT80
	88-92				**PF036**	Bdx	Ø 23,81	(<->), FT100, FT130, FT80
	88-92				**PF037**	Bdx	Ø 23,81	(x), FT100, FT80
Transit V (E1) 1/91-9/94								
2.0 Eng.NBA (66kW)	91-94		R		**CF179**	Bdx	Ø 20,64	FT80, FT100, FT120, FT130, FT150
	91-94		R		**CF178**	Bdx	Ø 22,20	FT80, FT100, FT115, FT120, FT150, FT190
	91-94		R		**CF180**	Bdx	Ø 25,40	FT190
	91-94				**PF043**	Bdx	Ø 23,81	FT80, FT100, FT120, FT150, FT190
2.0 i Eng.NCA (72kW)	91-94		R		**CF179**	Bdx	Ø 20,64	FT80, FT100, FT120, FT130, FT150
	91-94		R		**CF178**	Bdx	Ø 22,20	FT80, FT100, FT115, FT120, FT150, FT190
	91-94		R		**CF180**	Bdx	Ø 25,40	FT190
	91-94				**PF043**	Bdx	Ø 23,81	FT80, FT100, FT120, FT130, FT150
2.5 Di Eng.4DA (59kW)	91-94		R		**CF179**	Bdx	Ø 20,64	FT80, FT100, FT120, FT130, FT150
	91-94		R		**CF178**	Bdx	Ø 22,20	FT80, FT100, FT115, FT120, FT150, FT190
	91-94		R		**CF180**	Bdx	Ø 25,40	FT190
	91-94				**PF043**	Bdx	Ø 23,81	FT100
2.5 Di Eng.4FA/ B/ C/ D (51kW)	91-94		R		**CF179**	Bdx	Ø 20,64	FT80, FT100, FT120, FT130, FT150
	91-94		R		**CF178**	Bdx	Ø 22,20	FT80, FT100, FT115, FT120, FT150, FT190
	91-94		R		**CF180**	Bdx	Ø 25,40	FT190
	91-94				**PF043**	Bdx	Ø 23,81	FT80, FT100, FT130, FT150, FT190
2.5 TD Eng.4EA (74kW)	91-94		R		**CF179**	Bdx	Ø 20,64	FT80, FT100, FT120, FT130, FT150
	91-94		R		**CF178**	Bdx	Ø 22,20	FT80, FT100, FT115, FT120, FT150, FT190
	91-94		R		**CF180**	Bdx	Ø 25,40	FT190
	91-94				**PF043**	Bdx	Ø 23,81	FT120, FT130, FT150
2.5 TD Eng.4GA/ B/ C/ D/ E/ F (63kW)	92-94		R		**CF179**	Bdx	Ø 20,64	FT80, FT100, FT120, FT130, FT150
	92-94		R		**CF178**	Bdx	Ø 22,20	FT80, FT100, FT115, FT120, FT150, FT190
	92-94		R		**CF180**	Bdx	Ø 25,40	FT190
	92-94				**PF043**	Bdx	Ø 23,81	FT80, FT100, FT120
2.9 i Eng.BRT (107kW)	91-94		R		**CF180**	Bdx	Ø 25,40	FT190
	91-94				**PF043**	Bdx	Ø 23,81	FT150

FORD LCV

		Spare Parts	F/R	L/R	FRITECH ref.		DIMENSIONS mm.	NOTE
Transit VI (E2) 7/94-6/00								
2.0, CNG Eng.NSF/ G/ H/ D (84kW)	95-00				**PF602**	Bch	Ø 23,81	Alu, +ABS
	95-00				**PF390**	Bch	Ø 23,81	Alu, -ABS
2.5 Di Eng.4ED (85kW)	97-00		R		**CF178**	Bdx	Ø 22,20	FT80, FT100, FT115, FT120, FT150, FT190
	5/97-3/00				**PF602**	Bch	Ø 23,81	Alu, +ABS
	5/97-3/00				**PF390**	Bch	Ø 23,81	Alu, -ABS
2.5 Di Eng.4FA/ B/ C/ D (51kW)	94-00		R		**CF179**	Bdx	Ø 20,64	FT80, FT100, L, FT115, FT120, FT130, FT150
	94-00		R		**CF178**	Bdx	Ø 22,20	FT80, FT100, FT115, FT120, FT150, FT190
	94-00		R		**CF180**	Bdx	Ø 25,40	FT150, FT190
	94-00				**PF602**	Bch	Ø 23,81	Alu, +ABS
	94-00				**PF390**	Bch	Ø 23,81	Alu, -ABS
	94-00				**PF043**	Bdx	Ø 23,81	FT80, FT100, FT130, FT150, FT190
2.5 Di Eng.4HB/ C (56kW)	94-00		R		**CF179**	Bdx	Ø 20,64	FT80, FT100, L, FT115, FT120, FT130, FT150
	94-00		R		**CF178**	Bdx	Ø 22,20	FT80, FT100, FT115, FT120, FT150, FT190
	94-00				**PF602**	Bch	Ø 23,81	Alu, +ABS
	94-00				**PF390**	Bch	Ø 23,81	Alu, -ABS
2.5 TD Eng.4EB/ C (74kW)	94-00		R		**CF179**	Bdx	Ø 20,64	FT80, FT100, L, FT115, FT120, FT130, FT150
	94-00		R		**CF178**	Bdx	Ø 22,20	FT80, FT100, FT115, FT120, FT150, FT190
	94-00		R		**CF180**	Bdx	Ø 25,40	FT150, FT190
	94-00				**PF602**	Bch	Ø 23,81	Alu, +ABS
	94-00				**PF390**	Bch	Ø 23,81	Alu, -ABS
	94-00				**PF043**	Bdx	Ø 23,81	FT120, FT130, FT150
2.5 TD Eng.4GA/ B/ C/ D/ E/ F (63kW)	95-00		R		**CF179**	Bdx	Ø 20,64	FT80, FT100, L, FT115, FT120, FT130, FT150
	95-00		R		**CF178**	Bdx	Ø 22,20	FT80, FT100, FT115, FT120, FT150, FT190
	95-00		R		**CF180**	Bdx	Ø 25,40	FT190
	95-00				**PF602**	Bch	Ø 23,81	Alu, +ABS
	95-00				**PF390**	Bch	Ø 23,81	Alu, -ABS
	95-00				**PF043**	Bdx	Ø 23,81	FT80, FT100, FT130
2.5 TD Eng.4HA/ D (55kW)	94-00		R		**CF179**	Bdx	Ø 20,64	FT80, FT100, L, FT115, FT120, FT130, FT150
	94-00		R		**CF178**	Bdx	Ø 22,20	FT80, FT100, FT115, FT120, FT150, FT190
	94-00				**PF602**	Bch	Ø 23,81	Alu, +ABS
	94-00				**PF390**	Bch	Ø 23,81	Alu, -ABS
Transit VII (FA, FD, FM) 1/00-3/06								
2.0 Di Eng.ABFA (74kW)	00-		R		**CF180**	Bdx	Ø 25,40	
	00-06				**PF574**	Bch	Ø 25,40	Alu, +ABS
	00-06				**PF558**	Bch	Ø 25,40	Alu, -ABS
2.0 Di Eng.D3FA (55kW)	00-		R		**CF180**	Bdx	Ø 25,40	
	00-06				**PF574**	Bch	Ø 25,40	Alu, +ABS
	00-06				**PF558**	Bch	Ø 25,40	Alu, -ABS
2.0 Di Eng.F3FA (63kW)	00-		R		**CF180**	Bdx	Ø 25,40	
	00-06				**PF574**	Bch	Ø 25,40	Alu, +ABS
	00-06				**PF558**	Bch	Ø 25,40	Alu, -ABS
2.0 TDCi Eng.FIFA (92kW)	02-		R		**CF180**	Bdx	Ø 25,40	
	02-06				**PF574**	Bch	Ø 25,40	Alu, +ABS
	02-06				**PF558**	Bch	Ø 25,40	Alu, -ABS
2.3 16v Eng.E5FA/ C (105-107kW)	01-06		R		**CF180**	Bdx	Ø 25,40	
	01-06				**PF574**	Bch	Ø 25,40	Alu, +ABS
	01-06				**PF558**	Bch	Ø 25,40	Alu, -ABS
2.4 Di Eng.D2FA/ B/ E (66kW)	00-		R		**CF180**	Bdx	Ø 25,40	
	00-06				**PF574**	Bch	Ø 25,40	Alu, +ABS
	00-06				**PF558**	Bch	Ø 25,40	Alu, -ABS
2.4 Di Eng.D4FA (88kW)	00-		R		**CF180**	Bdx	Ø 25,40	
	00-06				**PF574**	Bch	Ø 25,40	Alu, +ABS
	00-06				**PF558**	Bch	Ø 25,40	Alu, -ABS
2.4 Di Eng.F4FA (55kW)	00-		R		**CF180**	Bdx	Ø 25,40	
	00-06				**PF574**	Bch	Ø 25,40	Alu, +ABS
	00-06				**PF558**	Bch	Ø 25,40	Alu, -ABS
2.4 TDCi Eng.H9FA (101kW)	04-		R		**CF180**	Bdx	Ø 25,40	
	04-06				**PF574**	Bch	Ø 25,40	Alu, +ABS
	04-06				**PF558**	Bch	Ø 25,40	Alu, -ABS
2.4 TDE Eng.D0FA (92kW)	01-		R		**CF180**	Bdx	Ø 25,40	
	01-06				**PF574**	Bch	Ø 25,40	Alu, +ABS
	01-06				**PF558**	Bch	Ø 25,40	Alu, -ABS

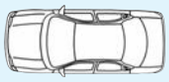		Spare Parts	F/R	L/R	FRITECH ref.		DIMENSIONS mm.	NOTE
2.4 TDE Eng.FXFA (85kW)	04-06		R		**CF180**	Bdx	Ø 25,40	
	04-06				**PF574**	Bch	Ø 25,40	Alu, +ABS
	04-06				**PF558**	Bch	Ø 25,40	Alu, -ABS
Transit VIII 7/06-4/14								
2.2 TDCi Eng.P8FA/ B (63kW)	06-		R		**CF180**	Bdx	Ø 25,40	Rear Drum Brake
	06-				**PF898**	Bch	Ø 25,40	Alu, +ABS
	06-				**PF988**	Bch	Ø 25,40	Alu, -ABS
2.2 TDCi Eng.PGFA (103kW)	07-		R		**CF180**		Ø 25,40	Rear Drum Brake
	07-				**PF898**	Bch	Ø 25,40	Alu, +ABS
	07-				**PF988**	Bch	Ø 25,40	Alu, -ABS
2.2 TDCi Eng.QVFA (81kW)	06-		R		**CF180**	Bdx	Ø 25,40	Rear Drum Brake
	06-				**PF898**	Bch	Ø 25,40	Alu, +ABS
	06-				**PF988**	Bch	Ø 25,40	Alu, -ABS
2.2 TDCi Eng.QWFA (96kW)	06-				**PF898**	Bch	Ø 25,40	Alu, +ABS
	06-				**PF988**	Bch	Ø 25,40	Alu, -ABS
2.2 TDCi Eng.SRFA/ B/ V/ D/ E (85kW)	08-		R		**CF180**		Ø 25,40	Rear Drum Brake
	08-				**PF898**	Bch	Ø 25,40	Alu, +ABS
	08-				**PF988**	Bch	Ø 25,40	Alu, -ABS
2.2 TDCi RWD Eng.CVRA/B/C (114kW)	11-		R		**CF180**	Bdx	Ø 25,40	
	11-				**PF898**	Bch	Ø 25,40	Alu, +ABS
	11-				**PF988**	Bch	Ø 25,40	Alu, -ABS
2.2 TDCi, RWD Eng.DRFA/B/C/E/ DRRA/B/C	11-				**PF898**	Bch	Ø 25,40	Alu, +ABS
(74kW)	11-				**PF988**	Bch	Ø 25,40	Alu, -ABS
2.2 TDCi, RWD, 4WD Eng.CYFA/B/C/D/ CYRA	11-				**PF898**	Bch	Ø 25,40	Alu, +ABS
(92kW)	11-				**PF988**	Bch	Ø 25,40	Alu, -ABS
2.3 16v LPG Eng.GZFA (107kW)	06-		R		**CF180**	Bdx	Ø 25,40	
	06-				**PF898**	Bch	Ø 25,40	Alu, +ABS
	06-				**PF988**	Bch	Ø 25,40	Alu, -ABS
2.4 TDCi Eng.JXFA (85kW)	06-		R		**CF180**	Bdx	Ø 25,40	
	06-				**PF898**	Bch	Ø 25,40	Alu, +ABS
	06-				**PF988**	Bch	Ø 25,40	Alu, -ABS
2.4 TDCi Eng.PHFA/ C (74kW)	06-		R		**CF180**	Bdx	Ø 25,40	
	06-				**PF898**	Bch	Ø 25,40	Alu, +ABS
	06-				**PF988**	Bch	Ø 25,40	Alu, -ABS
2.4 TDCi, Allrad Eng.H9FB (103kW)	06-		R		**CF180**	Bdx	Ø 25,40	
	06-				**PF898**	Bch	Ø 25,40	Alu, +ABS
	06-				**PF988**	Bch	Ø 25,40	Alu, -ABS
3.2 TDCi Eng.SAFA (147kW)	07-		R		**CF180**	Bdx	Ø 25,40	Rear Drum Brake, FWD
	07-				**PF898**	Bch	Ø 25,40	Alu, +ABS
	07-				**PF988**	Bch	Ø 25,40	Alu, -ABS
Transit VIII Tourneo 7/06-8/14								
2.2 TDCi Eng.PGFA (103kW)	07-		R		**CF180**	Bdx	Ø 25,40	
	07-				**PF898**	Bch	Ø 25,40	Alu, +ABS
2.2 TDCi Eng.SRFA/ B/ V/ D/ E (85kW)	08-		R		**CF180**	Bdx	Ø 25,40	
	08-				**PF898**	Bch	Ø 25,40	Alu, +ABS
Transit Connect I 9/02-10/13								
1.8 16v Eng.EYPA (85kW)	02-		R		**CF839**	Loc	Ø 20,64	Alu, -ABS
	02-		R		**CF804**		Ø 20,64	Alu
1.8 16v LPG Eng.EYPC (85kW)	02-		R		**CF804**		Ø 20,64	Alu
1.8 Di Eng.BHPA (55kW)	02-		R		**CF839**	Loc	Ø 20,64	Alu, -ABS
	02-		R		**CF804**		Ø 20,64	Alu
1.8 TDCi Eng.HCPA (66kW)	02-		R		**CF839**	Loc	Ø 20,64	Alu, -ABS
	02-		R		**CF804**		Ø 20,64	Alu
1.8 TDCi Eng.RWPA (81kW)	06-		R		**CF839**		Ø 20,64	Alu, -ABS
	02-		R		**CF804**		Ø 20,64	Alu
Transit Courier 2/14-								
1.0 Ecoboost Eng.SFCB (74kW)	14-		R		**CF1015**	Trw	Ø 22,20	Alu
1.5 TDCi Eng.UGCA (55kW)	14-		R		**CF1015**	Trw	Ø 22,20	Alu
1.6 TDCi Eng.T3CA (70kW)	14-		R		**CF1015**	Trw	Ø 22,20	Alu

FORD USA

Cougar								
All models	85-89		R	L	**CF767**		Ø 19,05	
	85-89		R	R	**CF768**		Ø 19,05	

FORD USA

		Spare Parts	F/R	L/R	FRITECH ref.		DIMENSIONS mm.	NOTE
Custom								
All models	69-72		R	L	**CF609**		Ø 23,81	Exc. Police
	69-72		R	R	**CF610**		Ø 23,81	Exc. Police
Elite								
All models	1/76-12/76		R	L	**CF609**		Ø 23,81	Exc. Police
	1/76-12/76		R	R	**CF610**		Ø 23,81	Exc. Police
Escort, SW 1/91-12/96								
All models	83-84		R	L	**CF722**		Ø 20,20	
	81-90		R	L	**CF588**		Ø 20,64	
	83-84		R	R	**CF723**		Ø 20,20	
	81-90		R	R	**CF433**		Ø 20,64	
Fairlane								
All models	66-69		R	L	**CF437**		Ø 22,20	Exc. SW
	63-76		R	L	**CF609**		Ø 23,81	
	66-69		R	R	**CF436**		Ø 22,20	Exc. SW
	63-76		R	R	**CF610**		Ø 23,81	
Falcon								
All models	69-70		R	L	**CF437**		Ø 22,20	8 Cyl.
	69-70		R	L	**CF609**		Ø 23,81	SW
	69-70		R	R	**CF436**		Ø 22,20	8 Cyl.
	69-70		R	R	**CF610**		Ø 23,81	SW
Granada								
All models	75-80		R	L	**CF609**		Ø 23,81	
	75-80		R	R	**CF610**		Ø 23,81	
LTD								
All models	77-79		R	L	**CF609**		Ø 23,81	
	77-79		R	R	**CF610**		Ø 23,81	
Maverick								
All models	74-75		R	L	**CF437**		Ø 22,20	8 Cyl.
	76-77		R	L	**CF609**		Ø 23,81	
	74-75		R	R	**CF436**		Ø 22,20	8 Cyl.
	76-77		R	R	**CF610**		Ø 23,81	
Mustang I - II								
All models	70-73		R	L	**CF437**		Ø 22,20	6-8 Cyl.
	70-73		R	R	**CF436**		Ø 22,20	6-8 Cyl.
	80-93		R		**CF783**		Ø 19,05	9Inch Brake
Probe I 8/88-7/93								
2.2 (82kW)	89-97		R		**CF236**		Ø 17,46	Exc. Turbo
3.0 V6 (100LAC) (104kW)	89-97		R		**CF236**		Ø 17,46	Exc. Turbo
Probe II (ECP) 10/93-3/98								
2.0	89-97		R		**CF236**		Ø 17,46	Exc. Turbo
2.0 16v Eng.FS/ JH20 (85kW)	89-97		R		**CF236**		Ø 17,46	Exc. Turbo
2.5 V6 24v Eng.KL (119-120kW)	89-97		R		**CF236**		Ø 17,46	Exc. Turbo
Ranger 10/90-								
All models	1/83-12/97		R		**CF550**		Ø 19,05	9Inch Brake
	1/84-12/94		R		**CF551**		Ø 20,64	9Inch Brake
Taurus								
All models	86-92		R		**CF751**		Ø 19,05	
	92-00		R		**CF958**		Ø 25,40	
Tempo								
All models	84-94		R	L	**CF722**		Ø 20,20	
	84-94		R	R	**CF723**		Ø 20,20	
Thunderbird								
All models	68-79		R	L	**CF609**		Ø 23,81	
	72-76		R	L	**CF949**		Ø 25,40	9Inch Brake
	68-79		R	R	**CF610**		Ø 23,81	
	72-76		R	R	**CF950**		Ø 25,40	9Inch Brake
	83-86		R		**CF783**		Ø 19,05	9Inch Brake
	88-97		R		**CF958**		Ø 25,40	9Inch Brake
Torino - Gran Torino								
All models	72-73		R	L	**CF609**		Ø 23,81	8 Cyl.
	72-76		R	L	**CF949**		Ø 25,40	SW, 11Inch Brake
	72-79		R	L	**CF747**		Ø 25,40	8 Cyl.
	72-73		R	R	**CF610**		Ø 23,81	8 Cyl.

FORD USA

		Spare Parts	F/R	L/R	FRITECH ref.		DIMENSIONS mm.	NOTE
All models	72-76		R	R	**CF950**		Ø 25,40	SW, 11Inch Brake
	72-79		R	R	**CF748**		Ø 25,40	8 Cyl.
Windstar								
All models	95-00		R		**CF958**		Ø 25,40	

FORD USA TRUCK

1 Ton								
All models	67-76		R	L	**CF609**		Ø 23,81	
	68-92		R	L	**CF747**		Ø 25,40	
	67-76		R	R	**CF610**		Ø 23,81	
	68-92		R	R	**CF748**		Ø 25,40	
3/4 Ton								
All models	66-84		R	L	**CF609**		Ø 23,81	
	66-84		R	R	**CF610**		Ø 23,81	
Aerostar Van								
All models	86-89		R		**CF550**		Ø 19,05	9Inch Brake
	89-93		R		**CF962**		Ø 22,20	10Inch Brake
Bronco I								
All models	76-96		R	L	**CF609**		Ø 23,81	1/2 Ton
	76-96		R	R	**CF610**		Ø 23,81	1/2 Ton
Bronco II								
All models	1/83-12/89		R		**CF550**		Ø 19,05	
	1/84-12/90		R		**CF551**		Ø 20,64	
E150								
All models	97-00		R	L	**CF949**		Ø 25,40	1Inch Cylinder Bore
	97-00		R	R	**CF950**		Ø 25,40	1Inch Cylinder Bore
E250								
All models	85-00		R	L	**CF949**		Ø 25,40	12Inch Brake
	85-00		R	R	**CF950**		Ø 25,40	12Inch Brake
Explorer								
All models	91-94		R		**CF962**		Ø 22,20	
F 100 - 150 - 200 1/96-12/09								
All models	48-00		R	L	**CF949**		Ø 25,40	12Inch Brake
	48-00		R	R	**CF950**		Ø 25,40	12Inch Brake
F 250								
All models	66-84		R	L	**CF609**		Ø 23,81	3/4 Ton
	48-00		R	L	**CF949**		Ø 25,40	12Inch Brake
	66-84		R	R	**CF610**		Ø 23,81	3/4 Ton
	48-00		R	R	**CF950**		Ø 25,40	12Inch Brake
Ranchero								
All models	63-12/79		R	L	**CF609**		Ø 23,81	8 Cyl.
	72-78		R	L	**CF747**		Ø 25,40	
	72-78		R	L	**CF949**		Ø 25,40	
	63-12/79		R	R	**CF610**		Ø 23,81	8 Cyl.
	72-78		R	R	**CF748**		Ø 25,40	
	72-78		R	R	**CF950**		Ø 25,40	
Serie E								
E100/150	84-96		R	L	**CF609**		Ø 23,81	1/2 Ton
	84-96		R	R	**CF610**		Ø 23,81	1/2 Ton
E200/250	81-96		R	L	**CF747**		Ø 25,40	3/4 Ton
	81-96		R	R	**CF748**		Ø 25,40	3/4 Ton
E300/350	69-74		R	L	**CF437**		Ø 22,20	1 Ton
	80-92		R	L	**CF747**		Ø 25,40	1 Ton
	69-74		R	R	**CF436**		Ø 22,20	1 Ton
	80-92		R	R	**CF748**		Ø 25,40	1 Ton
F100/150	84-96		R	L	**CF609**		Ø 23,81	1/2 Ton
	84-96		R	R	**CF610**		Ø 23,81	1/2 Ton
F200/250	76-79		R	L	**CF747**		Ø 25,40	3/4 Ton
	76-79		R	R	**CF748**		Ø 25,40	3/4 Ton
F350	77-92		R	L	**CF747**		Ø 25,40	1 Ton
	77-92		R	R	**CF748**		Ø 25,40	1 Ton
P100	61-67		R	L	**CF437**		Ø 22,20	
	61-67		R	R	**CF436**		Ø 22,20	

FORD USA TRUCK

		Spare Parts	F/R	L/R	FRITECH ref.		DIMENSIONS mm.	NOTE
Serie P								
P350	68-76		R	L	**CF609**		Ø 23,81	1 Ton
	68-76		R	R	**CF610**		Ø 23,81	1 Ton

FSO

125P, SW 10/67-8/92								
1.3 Eng.116C076 (47kW)	81-82				**PF073**		Ø 19,05	
	81-82				**CT001**	Benditalia	Ø 25,40	Alu
	75-90				**CZ005**		Ø 19,05	Alu
	75-90				**CZ101**		Ø 19,05	
	75-90				**PZ010**		Ø 19,05	Alu
	75-90				**PZ111**		Ø 19,05	
1.5 Eng.AA (55kW)	78-91				**PF073**		Ø 19,05	
	78-91				**CT001**	Benditalia	Ø 25,40	Alu
	75-90				**CZ005**		Ø 19,05	Alu
	75-90				**CZ101**		Ø 19,05	
	75-90				**PZ010**		Ø 19,05	Alu
	75-90				**PZ111**		Ø 19,05	
126P 7/72-9/00								
0.6 Eng.126A1.048 (22kW)	1/79-		F		**CF595**		Ø 23,81	
	-12/78		F		**CF592**		Ø 23,81	
	-12/78		R		**CF593**		Ø 15,72	
	1/79-		R		**CF002**		Ø 19,05	
	1/79-				**PF004**		Ø 19,05	
	-12/78				**PF013**		Ø 19,05	
0.6 (17kW)	-77		F		**CF592**		Ø 23,81	
	-77		R		**CF593**		Ø 15,72	
	-77				**PF013**		Ø 19,05	
650 Eng.126A1.048 (18kW)	81-		F		**CF595**		Ø 23,81	
	81-		R		**CF002**		Ø 19,05	
	81-				**PF004**		Ø 19,05	
127P 10/69-10/76								
0.9 (33kW)	3/74-76		R		**CF002**		Ø 19,05	
	3/74-76				**PF045**		Ø 19,05	
	69-				**CZ005**		Ø 19,05	Alu
	69-				**CZ101**		Ø 19,05	
132P 1/74-9/78								
1.6 (72kW)	74-				**CZ005**		Ø 19,05	Alu
	74-				**CZ101**		Ø 19,05	
1.8 (79kW)	75-				**CZ005**		Ø 19,05	Alu
	75-				**CZ101**		Ø 19,05	
Polonez I 10/77-12/91								
1.5 Eng.AB (60kW)	83-88				**PF073**		Ø 19,05	
1.6 Eng.CB (64kW)	86-88				**PF073**		Ø 19,05	

GEO

Metro								
All models	87-88		R		**CF301**	Sanyco	Ø 17,46	Alu
	89-97		R		**CF291**	Uac	Ø 15,87	
Prizm 1/89-12/97								
1.6 16V Eng.4AFE (84kW)	89-95		R	L	**CF215**		Ø 17,46	Exc. GSi
	89-95		R	R	**CF214**		Ø 17,46	Exc. GSi
1.8 16v Eng.7AFE	89-95		R	L	**CF215**		Ø 17,46	Exc. GSi
	89-95		R	R	**CF214**		Ø 17,46	Exc. GSi
All models	89-95		R	L	**CF215**		Ø 17,46	Exc. GSi
	89-95		R	R	**CF214**		Ø 17,46	Exc. GSi
Spectrum								
All models	85-89		R		**CF621**		Ø 17,46	
Storm								
All models	90-93		R		**CF619**		Ø 15,87	
Tracker 1/89-12/98								
1.6 (60-72kW)	89-90		R	L	**CF467**		Ø 23,81	Alu
	91-95		R	L	**CF303**		Ø 23,81	
	89-90		R	R	**CF468**		Ø 23,81	Alu

GEO

		Spare Parts	F/R	L/R	FRITECH ref.		DIMENSIONS mm.	NOTE
1.6 (60-72kW)	91-95		R	R	**CF513**		Ø 23,81	
All models	89-90		R	L	**CF467**		Ø 23,81	Alu
	91-95		R	L	**CF303**		Ø 23,81	
	89-90		R	R	**CF468**		Ø 23,81	Alu
	91-95		R	R	**CF513**		Ø 23,81	

GMC TRUCK

C10, 15, K10 Suburban								
All models	92-00		R		**CF959**		Ø 25,40	
	1/88-12/92		R		**CF960**		Ø 28,60	
	1/88-99		R		**CF961**		Ø 30,16	+RC
C20 Suburban								
All models	89-97		R		**CF959**		Ø 25,40	
C20, 25 Pick-Up								
All models	89-98		R		**CF959**		Ø 25,40	7200lb Axle
	1/88-12/88		R		**CF960**		Ø 28,60	
Caballero								
All models	78-87		R		**CF928**		Ø 19,05	
	71-72		R		**CF934**		Ø 22,20	
	73-77		R		**CF931**		Ø 23,81	
G10/15 Van								
All models	96-00		R		**CF954**		Ø 23,81	
G20/25								
All models	96-00		R		**CF954**		Ø 23,81	7.3 lb GVW
	96-00		R		**CF959**		Ø 25,40	6,5litri, 8600lb Axle
G30, 35								
All models	98-00		R		**CF959**		Ø 25,40	SRW
G35								
All models	98-00		R		**CF959**		Ø 25,40	SRW
Jimmy								
All models	74-91		R		**CF931**		Ø 23,81	
	74-78		R		**CF932**		Ø 25,40	
Jimmy S15								
All models	83-88		R		**CF935**		Ø 23,81	
Jimmy T15								
All models	83-88		R		**CF928**		Ø 19,05	
K10, 15 Pick-Up								
All models	88-99		R		**CF959**		Ø 25,40	Only Diesel, +RC
	1/88-91		R		**CF960**		Ø 28,60	
	1/88-98		R		**CF961**		Ø 30,16	10Inch Brake
LLV Postal Vehicle								
All models	87-93		R		**CF946**		Ø 19,05	
	94-95		R		**CF762**		Ø 19,05	
Range 10								
All models	87-88		R		**CF931**		Ø 23,81	1/2 Ton
Range 20								
All models	1/87-12/87		R		**CF932**		Ø 25,40	3/4 Ton
	88-89		R		**CF941**		Ø 27,00	3/4 Ton
Range 30								
All models	87-91		R		**CF941**		Ø 27,00	1 Ton, SRW
	87-91		R		**CF942**		Ø 30,00	1 Ton, DRW
Safari Mini Van								
All models	85-86		R		**CF947**		Ø 20,64	
Safari Van								
All models	87-89		R		**CF934**		Ø 22,20	M15
	84-89		R		**CF932**		Ø 25,40	Wagon
V20 Suburban								
All models	1/88-12/88		R		**CF960**		Ø 28,60	
V25								
All models	89-91		R		**CF959**		Ø 25,40	7200lb Axle
Yukon								
All models	92-00		R		**CF961**		Ø 30,16	10Inch Brake

GOGGOMOBIL

		Spare Parts	F/R	L/R	FRITECH ref.		DIMENSIONS mm.	NOTE
Coupe 2/57-4/61								
0.25 (10kW)	57-69		R		**CF964**		Ø 17,46	
0.3 (11kW)	57-69		R		**CF964**		Ø 17,46	
0.4 (14kW)	57-69		R		**CF964**		Ø 17,46	
Dart								
0.3	59-61		R		**CF964**		Ø 17,46	
0.4	59-61		R		**CF964**		Ø 17,46	
Limousine 2/55-3/58								
0.25 (10kW)	55-69		R		**CF964**		Ø 17,46	
0.3 (11kW)	55-69		R		**CF964**		Ø 17,46	
0.4 (14kW)	55-69		R		**CF964**		Ø 17,46	
Pick-Up								
0.2	59-64		R		**CF964**		Ø 17,46	
0.3	59-64		R		**CF964**		Ø 17,46	
0.4	59-64		R		**CF964**		Ø 17,46	

HONDA

Acclaim 1/81-12/84								
All models	81-84		R	L	**CF408**		Ø 17,46	Alu
	81-84		R	R	**CF409**		Ø 17,46	Alu
Accord I (SJ, SY, SM, SV, SZ) 1/78-9/83								
1.6 L/EX (SY), H-Back Eng.EG/ EL/ EF/ EP (59kW)	78-78		R		**CF344**		Ø 17,46	Alu, Exc. Sweden, Mod. SY Eng. EG
	1/79-81		R		**CF401**		Ø 19,05	Alu, Exc. Sweden, Mod. SJ, SY Eng. EL
	78-81		R		**CF435**		Ø 19,05	Alu, Sweden, Mod. SY, SJ Eng. EG, EL
	81-83		R		**CF435**		Ø 19,05	Alu, Exc. Sweden, Mod. SY Eng. EL
	80-81				**PF181**		Ø 20,64	Alu, Mod. SJ Eng. EL
	81-83				**PF130**		Ø 20,64	Alu, Mod. SY Eng. EL
Accord II (AC, AD) 9/83-10/85								
1.6 EX (AC), H-Back Eng.EZ/ EP (65kW)	84-85		R		**CF435**		Ø 19,05	Alu
	84-85				**PF130**		Ø 20,64	Alu
1.8 EX (AD), H-Back Eng.ET1 (74kW)	84-85		R		**CF435**		Ø 19,05	Alu
	84-85				**PF130**		Ø 20,64	Alu
Accord III (CA4, CA5), Aerodeck 11/85-12/89								
1.6 L (CA4) Eng.A16A1 (65kW)	86-87		R		**CF439**		Ø 20,64	Alu
	86-87				**PF184**		Ø 22,20	Alu
2.0 EX (CA5) Eng.A20A1 (75-76kW)	1/89-12/89		R		**CF508**		Ø 20,64	Alu, Aerodeck
	86-87		R		**CF439**		Ø 20,64	Alu, Mod. CA5 Eng. A20A
	86-87				**PF184**		Ø 22,20	Alu, Mod. CA5 Eng. A20A
2.0 EXi (CA5) Eng.A20A3 (85kW)	1/89-12/89		R		**CF508**		Ø 20,64	Alu, Aerodeck
	86-87		R		**CF439**		Ø 20,64	Alu, Mod. CA5 Eng. A20A
	86-87				**PF184**		Ø 22,20	Alu, Mod. CA5 Eng. A20A
Accord IV (CB3, CB7) 1/90-12/93								
1.8 (CB1,2), Aerodeck Eng.F18A2 (74kW)	90-91		R	L	**CF498**		Ø 19,05	Alu
	91-		R	L	**CF617**		Ø 20,64	Alu, Usa, Estate
	90-91		R	R	**CF497**		Ø 19,05	Alu
	91-		R	R	**CF616**		Ø 20,64	Alu, Usa, Estate
2.0 16v (CB3) Eng.F20A2 (81kW)	90-92		R	L	**CF498**		Ø 19,05	Alu
	91-93		R	L	**CF617**		Ø 20,64	Alu, Usa, Estate
	90-92		R	R	**CF497**		Ø 19,05	Alu
	91-93		R	R	**CF616**		Ø 20,64	Alu, Usa, Estate
	90-92				**PF255**	Nissin	Ø 25,40	Alu, +BFR
	90-				**PZ065**	Nissin	Ø 15,87	Alu
2.0 16v (CB3) Eng.F20A6 (66kW)	90-92		R	L	**CF498**		Ø 19,05	Alu
	91-93		R	L	**CF617**		Ø 20,64	Alu, Usa, Estate
	90-92		R	R	**CF497**		Ø 19,05	Alu
	91-93		R	R	**CF616**		Ø 20,64	Alu, Usa, Estate
	90-92				**PF255**	Nissin	Ø 25,40	Alu, +BFR
	90-				**PZ065**	Nissin	Ø 15,87	Alu
2.0 i 16v (CB3) Eng.F20A4/ F20A8 (98kW)	90-				**PZ065**	Nissin	Ø 15,87	Alu
2.0 i 16v (CC9) Aerodeck Eng.F20Z3 (98kW)	93-				**PZ065**	Nissin	Ø 15,87	Alu
2.0 i 16v Coupe Eng.F20A7 (98kW)	92-				**PZ065**	Nissin	Ø 15,87	Alu

		Spare Parts	F/R	L/R	FRITECH ref.		DIMENSIONS mm.	NOTE
2.2 i 16v (CB8) Aerodeck Eng.F22A7 (110kW)	91-92		R	L	**CF498**		Ø 19,05	Alu
	91-93		R	L	**CF617**		Ø 20,64	Alu, Usa, Estate
	91-92		R	R	**CF497**		Ø 19,05	Alu
	91-93		R	R	**CF616**		Ø 20,64	Alu, Usa, Estate
	91-92				**PF255**	Nissin	Ø 25,40	Alu, +BFR
	90-				**PZ065**	Nissin	Ø 15,87	Alu
2.2 i 16v (CB8) Aerodeck Eng.F22A8 (108kW)	91-92		R	L	**CF498**		Ø 19,05	Alu
	91-93		R	L	**CF617**		Ø 20,64	Alu, Usa, Estate
	91-92		R	R	**CF497**		Ø 19,05	Alu
	91-93		R	R	**CF616**		Ø 20,64	Alu, Usa, Estate
	91-92				**PF255**	Nissin	Ø 25,40	Alu, +BFR
	91-				**PZ065**	Nissin	Ø 15,87	Alu
2.2 i 16v, Automatik (CB7) Eng.F22A3 (108kW)	90-92		R	L	**CF498**		Ø 19,05	Alu
	91-93		R	L	**CF617**		Ø 20,64	Alu, Usa, Estate
	90-92		R	R	**CF497**		Ø 19,05	Alu
	91-93		R	R	**CF616**		Ø 20,64	Alu, Usa, Estate
	90-92				**PF255**	Nissin	Ø 25,40	Alu, +BFR
	90-				**PZ065**	Nissin	Ø 15,87	Alu
Accord V (CC7) 3/93-2/98								
2.0 (DC9) Coupe, Aerodeck Eng.F20B3 (100kW)	93-97				**PF255**	Nissin	Ø 25,40	Alu, +BFR
	93-				**PZ065**	Nissin	Ø 15,87	Alu, Only SW
2.0 i (CC7,CE2,CD4) Eng.F20Z2 (85kW)	93-				**PZ065**	Nissin	Ø 15,87	Alu
2.0 i S Eng.F20Z1 (96kW)	93-				**PZ065**	Nissin	Ø 15,87	Alu
2.2 i ES Coupe, Aerodeck Eng.F22B5 (110kW)	93-				**PZ065**	Nissin	Ø 15,87	Alu
2.3 i SR Eng.H23A3 (116kW)	93-				**PZ065**	Nissin	Ø 15,87	Alu
Accord VI (CE, CF) 2/96-10/98								
1.8 i (CE7) Eng.F18A3 (85kW)	96-				**PZ065**	Nissin	Ø 15,87	Alu
2.0 i LS (CE8) Eng.F20Z1 (96kW)	96-98				**PF255**	Nissin	Ø 25,40	Alu, +BFR
	96-				**PZ065**	Nissin	Ø 15,87	Alu
2.0 TDi (CF1) Eng.20T2N (77kW)	96-				**PZ065**	Nissin	Ø 15,87	Alu
2.2 i VTEC (CE9) Eng.F22Z2 (110kW)	96-				**PZ065**	Nissin	Ø 15,87	Alu
Accord VII (CG) 2/98-1/03								
1.6 i Eng.D16B6 (85kW)	10/98-		R	L	**CF792**	Luc	Ø 20,64	Alu
	10/98-		R	R	**CF791**	Luc	Ø 20,64	Alu
1.8 i, H-Back Eng.F18B2 (100kW)	10/98-				**PF515**	Nissin	Ø 25,40	Alu
2.0 Eng.F20B7 (107kW)	99-02				**PF515**	Nissin	Ø 25,40	Alu
2.0 i, H-Back, Coupe Eng.F20B6/ 5/ 7 (108kW)	10/98-				**PF515**	Nissin	Ø 25,40	Alu
2.2 Type-R Eng.H22A7 (156kW)	10/98-				**PF515**	Nissin	Ø 25,40	Alu
Accord VIII, Tourer (CL, CM) 2/03-6/08								
2.0 Eng.K20A6 (114kW)	03-08				**PF944**	Bch	Ø 20,64	Alu
	03-				**CZ115**		Ø 19,05	Alu
	03-				**PZ154**	Nissin	Ø 15,87	Alu
2.2 CTDi Eng.N22A1 (103kW)	04-08				**CZ115**		Ø 19,05	Alu
	04-				**PZ154**	Nissin	Ø 15,87	Alu
2.4 Eng.K24A (140kW)	03-				**CZ115**		Ø 19,05	Alu
	03-				**PZ154**	Nissin	Ø 15,87	Alu
Acty (TN) 8/78-6/86								
0.6 Eng.EH (23kW)	7/78-		R		**CF344**		Ø 17,46	Alu
Ballade 1/81-1/92								
1.3 (EF1) Eng.D13B (55kW)	86-89		R	L	**CF206**		Ø 19,05	Alu
	86-89		R	R	**CF207**		Ø 19,05	Alu
	86-89				**PF130**		Ø 20,64	Alu
1.3 12v (AG, AJ, VJ) Eng.EV2 (59kW)	86-89		R	L	**CF206**		Ø 19,05	Alu
	86-89		R	R	**CF207**		Ø 19,05	Alu
	86-89				**PF130**		Ø 20,64	Alu
1.5 12v (AH, AK) Eng.EW2/ 3/ 4 (62-67-78-74kW)	86-89		R	L	**CF206**		Ø 19,05	Alu
	86-89		R	R	**CF207**		Ø 19,05	Alu
	86-89				**PF130**		Ø 20,64	Alu
1.5 16v (EF2,4,5,6) Eng.D15B/ EC/ ED (66-69kW)	89-92		R		**CF759**		Ø 19,05	South Africa
1.6 16v (AT,AU,AS,EF3,EF7) Eng.ZC (92kW)	86-89		R	L	**CF206**		Ø 19,05	Alu
	86-89		R	R	**CF207**		Ø 19,05	Alu
	86-89				**PF130**		Ø 20,64	Alu

HONDA

		Spare Parts	F/R	L/R	FRITECH ref.		DIMENSIONS mm.	NOTE
Civic I 7/72-12/84								
1.2 (SB1) Eng.EB1 (40kW)	76-77		R		**CF400**		Ø 15,87	Alu, Mod. CVCC
	72-77		R		**CF344**		Ø 17,46	Alu, Sedan, H-Back
1.2 (SB2) Eng.EB2 (40kW)	77-80		R		**CF400**		Ø 15,87	Alu, Mod. CVCC
	77-79		R		**CF344**		Ø 17,46	Alu, Sedan, H-Back
1.3 S Eng.EN4 (52kW)	81-84		R	L	**CF206**		Ø 19,05	Alu, Sedan, H-Back, SW
	81-84		R	R	**CF207**		Ø 19,05	Alu, Sedan, H-Back, SW
	79-81		R		**CF408**		Ø 17,46	Alu, Incl. SW
	79-81		R		**CF409**		Ø 17,46	Alu, Incl. SW
Civic I Shuttle (AN, AR) 10/83-10/87								
1.5 (AN) Eng.EW2 (63kW)	-12/83		R	L	**CF206**		Ø 19,05	Alu, Sedan, H-Back, SW
	-12/83		R	R	**CF207**		Ø 19,05	Alu, Sedan, H-Back, SW
	-83		R		**CF400**		Ø 15,87	Alu, Exc. Europe, Mod. CVCC
	-83		R		**CF344**		Ø 17,46	Alu, Europe, Mod. CVCC / Sedan, H-Back
1.5 4WD (AR) Eng.EW2 (63kW)	81-12/83		R	L	**CF206**		Ø 19,05	Alu, Sedan, H-Back, SW
	81-12/83		R	R	**CF207**		Ø 19,05	Alu, Sedan, H-Back, SW
	74-83		R		**CF400**		Ø 15,87	Alu, Exc. Europe, Mod. CVCC
	73-83		R		**CF344**		Ø 17,46	Alu, Europe, Mod. CVCC / Sedan, H-Back
Civic II 10/83-10/87								
1.2 Eng.D12B/ ZA2 (40kW)	84-87		R		**CF207**		Ø 19,05	Alu
	84-87				**PF130**		Ø 20,64	Alu
1.3 12v Eng.EV2 (52kW)	84-87		R	L	**CF206**		Ø 19,05	Alu, CRX, Coupè
	84-87		R	R	**CF207**		Ø 19,05	Alu, CRX, Coupè
	84-87				**PF130**		Ø 20,64	Alu
1.5 GL Eng.EW2 (63kW)	84-87		R	L	**CF206**		Ø 19,05	Alu, CRX, Coupè
	84-87		R	R	**CF207**		Ø 19,05	Alu, CRX, Coupè
	84-87				**PF130**		Ø 20,64	Alu
Civic III (EC, ED, EE) 9/87-9/91								
1.3 (EC8) Eng.D13B1 (55kW)	11/88-89		R	L	**CF206**		Ø 19,05	Alu, Sedan, H-Back, SW, CRX
	87-89		R	R	**CF207**		Ø 19,05	Alu, Sedan, H-Back, SW, CRX
	88-12/89		R		**CF462**		Ø 19,05	Alu, SW 4WD, RHD
	87-89				**PF182**		Ø 20,64	Alu, CRX
	87-89				**PF184**		Ø 22,20	Alu, Sedan, H-Back, SW, LHD
1.3 16v (EC8) Kat H-Back Eng.D13B2 (55kW)	90-91		R	L	**CF464**	Nissin	Ø 19,05	Alu, Sedan, H-Back, SW
	-89		R	L	**CF206**		Ø 19,05	Alu, Sedan, H-Back, SW, CRX
	90-91		R	R	**CF463**	Nissin	Ø 19,05	Alu, Sedan, H-Back, SW
	-89		R	R	**CF207**		Ø 19,05	Alu, Sedan, H-Back, SW, CRX
	-12/89		R		**CF462**		Ø 19,05	Alu, SW 4WD, RHD
	90-91		R		**CF499**		Ø 19,05	Alu, 4WD
	-89				**PF182**		Ø 20,64	Alu, CRX
	-89				**PF184**		Ø 22,20	Alu, Sedan, H-Back, SW, LHD
1.4 L (EC9, ED2) Eng.D14A1 (66kW)	88-12/89		R	L	**CF206**		Ø 19,05	Alu
	88-12/89		R	R	**CF207**		Ø 19,05	Alu
	88-89		R		**CF462**		Ø 19,05	Alu, Shuttle (Only 4x4)
	87-89				**PF182**		Ø 20,64	Alu, CRX, Coupé, Shuttle, LHD, 5p
1.5 i 16v (ED3, 6), Shuttle, 4WD Eng.D15B2	90-91		R	L	**CF464**	Nissin	Ø 19,05	Alu, Exc. 4WD
(66-69kW)	87-12/89		R	L	**CF206**		Ø 19,05	Alu
	90-91		R	R	**CF463**	Nissin	Ø 19,05	Alu, Exc. 4WD
	87-12/89		R	R	**CF207**		Ø 19,05	Alu, Exc. 4WD
	87-12/89		R		**CF462**		Ø 19,05	Alu, 4WD, Shuttle
	90-91		R		**CF499**		Ø 19,05	Alu, 4WD, Shuttle
	87-89				**PF182**		Ø 20,64	Alu, LHD
	90-91				**PF184**		Ø 22,20	Alu
1.6 i 16v Eng.D16A7/ 9 (96kW)	-87		R	L	**CF206**		Ø 19,05	Alu, Coupè
	-87		R	R	**CF207**		Ø 19,05	Alu, Coupè
	-87				**PF184**		Ø 22,20	Alu
1.6 i 16v (ED4, 7) Eng.D16A6 (80kW)	90-91		R	L	**CF464**	Nissin	Ø 19,05	Alu, Sedan, H-Back, SW (Exc. 4x4)
	87-91		R	L	**CF206**		Ø 19,05	Alu, CRX Coupé VTec
	87-91		R	L	**CF576**		Ø 19,05	Alu, Only SW
	90-91		R	R	**CF463**	Nissin	Ø 19,05	Alu, Sedan, H-Back, SW (Exc. 4x4)
	87-91		R	R	**CF207**		Ø 19,05	Alu, CRX Coupé VTec
	87-91		R	R	**CF574**		Ø 19,05	Alu, Only SW
	87-12/89		R		**CF462**		Ø 19,05	Alu, SW, 4x4, Shuttle
	90-91		R		**CF499**		Ø 19,05	Alu, Sedan, H-Back, SW, Shuttle (Only 4x4)

		Spare Parts	F/R	L/R	FRITECH ref.		DIMENSIONS mm.	NOTE
1.6 i 16v (ED4, 7) Eng.D16A6 (80kW)	87-89				**PF182**		Ø 20,64	Alu, LHD
	87-91				**PF184**		Ø 22,20	Alu, LHD
1.6 i 16v (ED4, 7) Eng.D16Z2 (82kW)	90-91		R	L	**CF464**	Nissin	Ø 19,05	Alu, Sedan, H-Back, SW (Exc. 4x4)
	87-91		R	L	**CF206**		Ø 19,05	Alu, CRX Coupé VTec
	87-91		R	L	**CF576**		Ø 19,05	Alu, Only SW
	90-91		R	R	**CF463**	Nissin	Ø 19,05	Alu, Sedan, H-Back, SW (Exc. 4x4)
	87-91		R	R	**CF207**		Ø 19,05	Alu, CRX Coupé VTec
	87-91		R	R	**CF574**		Ø 19,05	Alu, Only SW
	87-12/89		R		**CF462**		Ø 19,05	Alu, SW, 4x4, Shuttle
	90-91		R		**CF499**		Ø 19,05	Alu, Sedan, H-Back, SW, Shuttle (Only 4x4)
	87-89				**PF182**		Ø 20,64	Alu, LHD
	87-91				**PF184**		Ø 22,20	Alu, LHD
1.6 i 16v 4WD Shuttle Eng.D16A6 (80kW)	90-91		R	L	**CF464**	Nissin	Ø 19,05	Alu, Sedan, H-Back, SW (Exc. 4x4)
	87-91		R	L	**CF206**		Ø 19,05	Alu, CRX Coupé VTec
	87-91		R	L	**CF576**		Ø 19,05	Alu, Only SW
	90-91		R	R	**CF463**	Nissin	Ø 19,05	Alu, Sedan, H-Back, SW (Exc. 4x4)
	87-91		R	R	**CF207**		Ø 19,05	Alu, CRX Coupé VTec
	87-91		R	R	**CF574**		Ø 19,05	Alu, Only SW
	87-12/89		R		**CF462**		Ø 19,05	Alu, SW, 4x4, Shuttle
	90-91		R		**CF499**		Ø 19,05	Alu, Sedan, H-Back, SW, Shuttle (Only 4x4)
	87-89				**PF182**		Ø 20,64	Alu, LHD
	87-91				**PF184**		Ø 22,20	Alu, LHD
Civic IV (EG) 10/91-11/95								
1.3 16v (EG3, 7) Eng.D13B2 (55kW)	91-95		R	L	**CF464**	Nissin	Ø 19,05	Alu
	91-95		R	R	**CF463**	Nissin	Ø 19,05	Alu
	91-95				**PF262**	Aisin	Ø 23,81	Alu, +ABS
	91-95				**PZ066**	Nissin	Ø 15,87	Alu
1.5 i 16v (EG4) Eng.D15Z1 (66kW)	95-		R	L	**CF252**	Luc	Ø 19,05	Alu
	91-95		R	L	**CF464**	Nissin	Ø 19,05	Alu
	95-		R	R	**CF253**	Luc	Ø 19,05	Alu
	91-95		R	R	**CF463**	Nissin	Ø 19,05	Alu
	91-95				**PF182**		Ø 20,64	Alu
1.5 i 16v (EG8) Eng.D15B2/ Z1 (69kW)	95-		R	L	**CF252**	Luc	Ø 19,05	Alu
	91-95		R	L	**CF464**	Nissin	Ø 19,05	Alu
	95-		R	R	**CF253**	Luc	Ø 19,05	Alu
	91-95		R	R	**CF463**	Nissin	Ø 19,05	Alu
	91-95				**PF182**		Ø 20,64	Alu
	91-95				**PZ066**	Nissin	Ø 15,87	Alu
1.6 16v Vtec (EG5), 4WD Eng.D16Z6/ 7 (92kW)	91-95		R	L	**CF464**	Nissin	Ø 19,05	Alu
	91-95		R	R	**CF463**	Nissin	Ø 19,05	Alu
	91-95				**PF262**	Aisin	Ø 23,81	Alu, +ABS
	91-95				**PF182**		Ø 20,64	Alu
	91-95				**PZ066**	Nissin	Ø 15,87	Alu
1.6 VTi (EG6, 9) Eng.B16A2 (118kW)	91-95				**PF262**	Aisin	Ø 23,81	Alu, +ABS
	91-95				**PZ066**	Nissin	Ø 15,87	Alu
Civic IV Coupe (EJ) 1/94-3/96								
1.6 i (EJ6) Eng.D16Y7 (77kW)	94-95				**PF374**		Ø 22,20	+ABS
1.6 i Vtec (EJ1) Eng.D16Z9/ D16Y6 (92kW)	94-96		R	L	**CF464**	Nissin	Ø 19,05	Alu
	94-96		R	R	**CF463**	Nissin	Ø 19,05	Alu
	94-96				**PF374**		Ø 22,20	+ABS
	94-96				**PF586**		Ø 20,64	Alu, -ABS
	94-96				**PF182**		Ø 20,64	Alu
Civic IV Coupe (MA, MB) 9/94-1/97								
1.4 i (MA8) Eng.D14A2 (66kW)	94-97		R	L	**CF252**	Luc	Ø 19,05	Alu
	94-97		R	R	**CF253**	Luc	Ø 19,05	Alu
	94-97				**PF586**		Ø 20,64	Alu, -ABS
	94-				**PZ066**	Nissin	Ø 15,87	Alu
1.4 i (MA8) Eng.D14A5 (55kW)	95-97		R	L	**CF252**	Luc	Ø 19,05	Alu
	95-97		R	R	**CF253**	Luc	Ø 19,05	Alu
	95-				**PZ066**	Nissin	Ø 15,87	Alu
1.5 i Vtec-E (MA9) Eng.D15Z3 (66kW)	95-97		R	L	**CF252**	Luc	Ø 19,05	Alu
	94-95		R	L	**CF464**	Nissin	Ø 19,05	Alu
	95-97		R	R	**CF253**	Luc	Ø 19,05	Alu
	94-95		R	R	**CF463**	Nissin	Ø 19,05	Alu

HONDA

		Spare Parts	F/R	L/R	FRITECH ref.		DIMENSIONS mm.	NOTE
1.5 i Vtec-E (MA9) Eng.D15Z3 (66kW)	94-95				**PF182**		Ø 20,64	Alu
	94-				**PZ066**	Nissin	Ø 15,87	Alu
1.6 i (MB1) Eng.D16Y3 (83kW)	94-				**PZ066**	Nissin	Ø 15,87	Alu
1.6 i Vtec (MB1) Eng.D16Y2 (93kW)	94-97		R	L	**CF464**	Nissin	Ø 19,05	Alu
	94-97		R	R	**CF463**	Nissin	Ø 19,05	Alu
	94-97				**PF182**		Ø 20,64	Alu
	94-				**PZ066**	Nissin	Ø 15,87	Alu
Civic V (EJ9, EK1/3/4) 11/95-2/01								
1.4 i (EJ9) Eng.D14A3/ 4 (55kW)	-12/95		R	L	**CF235**	Luc	Ø 19,05	Alu
	98-01		R	L	**CF252**	Luc	Ø 19,05	Alu
	96-97		R	L	**CF464**	Nissin	Ø 19,05	Alu
	-12/95		R	R	**CF234**	Luc	Ø 19,05	Alu
	98-01		R	R	**CF253**	Luc	Ø 19,05	Alu
	96-97		R	R	**CF463**	Nissin	Ø 19,05	Alu
	95-				**PZ066**	Nissin	Ø 15,87	Alu
1.4 i S (EJ9) Eng.D14A2 (66kW)	-12/95		R	L	**CF235**	Luc	Ø 19,05	Alu
	98-01		R	L	**CF252**	Luc	Ø 19,05	Alu
	96-97		R	L	**CF464**	Nissin	Ø 19,05	Alu
	-12/95		R	R	**CF234**	Luc	Ø 19,05	Alu
	98-01		R	R	**CF253**	Luc	Ø 19,05	Alu
	96-97		R	R	**CF463**	Nissin	Ø 19,05	Alu
	95-01				**PF902**	Nissin	Ø 20,64	Alu, -ABS, RHD
	95-01				**PF586**		Ø 20,64	Alu, -ABS
	95-				**PZ066**	Nissin	Ø 15,87	Alu
1.5 Eng.D14A4 (66kW)	-12/95		R	L	**CF235**	Luc	Ø 19,05	Alu
	-12/95		R	R	**CF234**	Luc	Ø 19,05	Alu
1.5 i Eng.D15B2 (66kW)	-12/95		R	L	**CF235**	Luc	Ø 19,05	Alu
	-12/95		R	R	**CF234**	Luc	Ø 19,05	Alu
1.5 i (EK3) Eng.D15Z6 (84kW)	-12/95		R	L	**CF235**	Luc	Ø 19,05	Alu
	98-01		R	L	**CF252**	Luc	Ø 19,05	Alu
	96-97		R	L	**CF464**	Nissin	Ø 19,05	Alu
	-12/95		R	R	**CF234**	Luc	Ø 19,05	Alu
	98-01		R	R	**CF253**	Luc	Ø 19,05	Alu
	96-97		R	R	**CF463**	Nissin	Ø 19,05	Alu
	95-01				**PF902**	Nissin	Ø 20,64	Alu, -ABS, RHD
	-01				**PF587**	Nissin	Ø 22,00	Ch 05020064-, Alu, -ABS
	95-				**PZ066**	Nissin	Ø 15,87	Alu
1.6 i (EK1) Eng.D16Y5/ Y6/ Y8 (84-92kW)	95-01		R	L	**CF464**	Nissin	Ø 19,05	Alu
	95-01		R	R	**CF463**	Nissin	Ø 19,05	Alu
	95-01				**PF902**	Nissin	Ø 20,64	Alu, -ABS, RHD
1.6 VTi (EK4) Eng.B16A2 (118kW)	95-01				**PF902**	Nissin	Ø 20,64	Alu, -ABS, RHD
Civic V Aerodeck (MC) 4/98-2/01								
1.4 16v (MB8) Eng.D14A7 (55kW)	98-01		R	L	**CF252**	Luc	Ø 19,05	Alu
	98-01		R	R	**CF253**	Luc	Ø 19,05	Alu
	98-01				**PZ152**	Nissin	Ø 15,87	Alu
1.4 16v (MB8) Eng.D14A8 (66kW)	98-01		R	L	**CF252**	Luc	Ø 19,05	Alu
	98-01		R	R	**CF253**	Luc	Ø 19,05	Alu
	98-01				**PZ152**	Nissin	Ø 15,87	Alu
1.5 16v (MB9) Eng.D15Z8 (84kW)	98-01		R	L	**CF252**	Luc	Ø 19,05	Alu
	98-01		R	R	**CF253**	Luc	Ø 19,05	Alu
	98-01				**PZ152**	Nissin	Ø 15,87	Alu
1.6 16v (MC1) Eng.D16B2 (85kW)	98-01		R	L	**CF464**	Nissin	Ø 19,05	Alu
	98-01		R	R	**CF463**	Nissin	Ø 19,05	Alu
	98-01				**PZ152**	Nissin	Ø 15,87	Alu
1.8 16v (MC2) Eng.B18C4 (124kW)	98-01				**PZ152**	Nissin	Ø 15,87	Alu
Civic V Coupe (EJ6, EJ8) 3/96-3/00								
1.6 i Eng.D16Y7 (77kW)	-00				**PF587**	Nissin	Ø 22,00	Ch 05020064-, Alu, -ABS
	3/96-6/96				**PF586**		Ø 20,64	Alu, -ABS
1.6 i Vtec Eng.D16Z9 (92kW)	95-01				**PF902**	Nissin	Ø 20,64	Alu, -ABS, RHD
	-00				**PF587**	Nissin	Ø 22,00	Ch 05020064-, Alu, -ABS
Civic V Fastback (MA, MB) 1/97-2/01								
1.4 16v (MB2) Eng.D14A7 (55kW)	98-01		R	L	**CF252**	Luc	Ø 19,05	Alu
	-12/97		R	L	**CF464**	Nissin	Ø 19,05	Alu
	98-01		R	R	**CF253**	Luc	Ø 19,05	Alu

		Spare Parts	F/R	L/R	FRITECH ref.		DIMENSIONS mm.	NOTE
1.4 16v (MB2) Eng.D14A7 (55kW)	-12/97		R	R	**CF463**	Nissin	Ø 19,05	Alu
1.4 16v (MB2) Eng.D14A8 (66kW)	98-01		R	L	**CF252**	Luc	Ø 19,05	Alu
	-97		R	L	**CF464**	Nissin	Ø 19,05	Alu
	98-01		R	R	**CF253**	Luc	Ø 19,05	Alu
	-97		R	R	**CF463**	Nissin	Ø 19,05	Alu
	97-01				**PF586**		Ø 20,64	Alu, -ABS
1.5 16v (MB3) Eng.D15Z8 (84kW)	98-01		R	L	**CF252**	Luc	Ø 19,05	Alu
	-97		R	L	**CF464**	Nissin	Ø 19,05	Alu
	98-01		R	R	**CF253**	Luc	Ø 19,05	Alu
	-97		R	R	**CF463**	Nissin	Ø 19,05	Alu
	-01				**PF587**	Nissin	Ø 22,00	Ch 05020064-, Alu, -ABS
1.6 16v (MB4) Eng.D16B2 (85kW)	-97		R	L	**CF464**	Nissin	Ø 19,05	Alu
	-97		R	R	**CF463**	Nissin	Ø 19,05	Alu
Civic VI (ES) 2/01-9/05								
1.4 Eng.D14Z5 (66kW)	01-05		R	L	**CF574**		Ø 19,05	Alu
	01-05		R	L	**CF576**		Ø 19,05	Alu, Only SW
Civic VI Coupe (EM) 2/01-12/05								
1.6 i Eng.D16V1 (81kW)	01-				**CZ114**		Ø 19,05	Alu
1.7 i VTEC Eng.D17A9 (92kW)	01-				**CZ114**		Ø 19,05	Alu
1.7i Eng.D17A8 (88kW)	01-				**CZ114**		Ø 19,05	Alu
Civic VI Hatchback (EU, EP) 2/01-12/05								
1.4 i Eng.D14E1/ Z2 (55kW)	01-		R	L	**CF556**	Nissin	Ø 19,05	Alu
	01-		R	R	**CF676**	Nissin	Ø 19,05	Alu
	01-				**CZ114**		Ø 19,05	Alu
1.4 iS Eng.D14Z6 (66kW)	01-		R	L	**CF556**	Nissin	Ø 19,05	Alu
	01-		R	R	**CF676**	Nissin	Ø 19,05	Alu
	01-				**PF509**	Nissin	Ø 22,20	Alu
	01-				**CZ114**		Ø 19,05	Alu
1.6 i Eng.D16V1 (81kW)	01-				**CZ114**		Ø 19,05	Alu
1.7 CTDi Eng.4EE-2 (74kW)	02-				**PF516**	Nissin	Ø 23,81	Alu
2.0 Type-R Eng.K20A2 (147kW)	01-				**PF510**	Nissin	Ø 23,81	Alu
	01-				**CZ115**		Ø 19,05	Alu
2.0i Sport Eng.K20A3 (118kW)	04-				**CZ115**		Ø 19,05	Alu
Civic VII H-Back (FD) 1/06-2/12								
1.4 Eng.L13A7 (61kW)	06-12				**CZ113**	Nissin	Ø 19,05	Alu
1.4 Eng.L13Z2 (73kW)	08-12				**CZ113**	Nissin	Ø 19,05	Alu
1.6 Eng.R16A1 (84kW)	06-				**PF943**	Nissin	Ø 19,05	Alu
1.8 Eng.R18A2 (103kW)	06-				**PF943**	Nissin	Ø 19,05	Alu
	06-12				**CZ113**	Nissin	Ø 19,05	Alu
2.0 i-VTEC Type R Eng.K20Z4 (148kW)	07-				**CZ115**		Ø 19,05	Alu
	07-				**PZ154**	Nissin	Ø 15,87	Alu
Civic VIII, Tourer (FK) 3/12-								
1.4 i-VTEC Eng.L13Z4 (73kW)	12-				**CZ113**	Nissin	Ø 19,05	Alu
1.8 i-VTEC Eng.R18Z4 (103-104kW)	12-				**CZ113**	Nissin	Ø 19,05	Alu
Concerto (HW) 8/89-3/95								
1.4 Eng.D14A1 (61kW)	89-91		R	L	**CF235**	Luc	Ø 19,05	Alu
	89-91		R	R	**CF234**	Luc	Ø 19,05	Alu
1.4 Eng.D14A1/ D14A8 (66kW)	89-91		R	L	**CF235**	Luc	Ø 19,05	Alu
	89-91		R	R	**CF234**	Luc	Ø 19,05	Alu
1.5 i 16v Eng.D15B2 (66kW)	89-91		R	L	**CF235**	Luc	Ø 19,05	Alu
	89-91		R	R	**CF234**	Luc	Ø 19,05	Alu
1.6 Eng.D16A9 (96kW)	89-92		R	L	**CF235**	Luc	Ø 19,05	Alu
	89-92		R	R	**CF234**	Luc	Ø 19,05	Alu
1.6 16v Eng.D16B2 (85kW)	90-92		R	L	**CF235**	Luc	Ø 19,05	Alu
	90-92		R	R	**CF234**	Luc	Ø 19,05	Alu
1.6 16v Eng.D16Z1 (77kW)	89-91		R	L	**CF235**	Luc	Ø 19,05	Alu
	89-91		R	R	**CF234**	Luc	Ø 19,05	Alu
1.6 i 16v Eng.D16A8 (90kW)	89-91		R	L	**CF235**	Luc	Ø 19,05	Alu
	89-91		R	R	**CF234**	Luc	Ø 19,05	Alu
1.6 i 16v Eng.D16Z2 (82kW)	89-91		R	L	**CF235**	Luc	Ø 19,05	Alu
	89-91		R	R	**CF234**	Luc	Ø 19,05	Alu
Cr-v I (RD1, 3) 10/95-6/05								
2.0 16v Eng.B20B (94kW)	95-99		R	L	**CF820**		Ø 20,64	Alu
	95-99		R	R	**CF819**		Ø 20,64	Alu

HONDA

		Spare Parts	F/R	L/R	FRITECH ref.		DIMENSIONS mm.	NOTE
2.0 16v Eng.B20Z1/ 3/ 9 (98-108kW)	99-02		R	L	**CF820**		Ø 20,64	Alu
	99-02		R	R	**CF819**		Ø 20,64	Alu
	99-				**CZ115**		Ø 19,05	Alu
Cr-v II (RD8) 7/02-12/06								
2.0 Eng.K20A4 (110kW)	02-				**PF942**	Nissin	Ø 23,81	Alu, RHD
	02-06				**PF510**	Nissin	Ø 23,81	Alu
	02-				**CZ115**		Ø 19,05	Alu
	02-				**PZ154**	Nissin	Ø 15,87	Alu
2.2 CTDi Eng.N22A2 (103kW)	05-				**CZ115**		Ø 19,05	Alu
	05-				**PZ154**	Nissin	Ø 15,87	Alu
Crx I (AF, AS) 10/83-10/87								
1.3 12v Eng.EV2 (52kW)	83-87		R	L	**CF206**		Ø 19,05	Alu
	83-87		R	R	**CF207**		Ø 19,05	Alu
1.5i (AF) Eng.EW3 (66-74kW)	83-86		R	L	**CF206**		Ø 19,05	Alu
	83-86		R	R	**CF207**		Ø 19,05	Alu
1.6 i 16v (AS) Eng.ZC1 (92kW)	86-87		R	L	**CF206**		Ø 19,05	Alu
	86-87		R	R	**CF207**		Ø 19,05	Alu
Crx III (EH, EG) 3/92-12/98								
1.6 ESi (EH6) Eng.D16Z6 (96-80kW)	3/92-		R	L	**CF498**		Ø 19,05	Alu
	3/92-		R	R	**CF497**		Ø 19,05	Alu
	92-98				**PF262**	Aisin	Ø 23,81	Alu, +ABS
	92-				**PZ066**	Nissin	Ø 15,87	Alu
1.6 VTi (EG2) Eng.B16A2 (118kW)	92-98				**PF262**	Aisin	Ø 23,81	Alu, +ABS
	92-				**PZ066**	Nissin	Ø 15,87	Alu
Cr-z (ZF1) 6/10-								
1.5 Hybrid Eng.LEA1 (84-91kW)	10-				**CZ113**	Nissin	Ø 19,05	Alu
FR-V (BE) 1/04-12/09								
1.7 16v Eng.D17A2 (92kW)	05-				**CZ114**		Ø 19,05	Alu
	05-				**PZ154**	Nissin	Ø 15,87	Alu
1.8 16v Eng.R18A1 (103kW)	07-				**PZ154**	Nissin	Ø 15,87	Alu
2.0 16V Eng.K20A9 (110kW)	05-				**CZ115**		Ø 19,05	Alu
	05-				**PZ154**	Nissin	Ø 15,87	Alu
2.2 CTDi Eng.N22A1 (103kW)	05-				**CZ115**		Ø 19,05	Alu
	05-				**PZ154**	Nissin	Ø 15,87	Alu
HR-V I (GH) 3/99-12/06								
1.6 16v 4WD Eng.D16W5 (91kW)	99-		R	L	**CF498**		Ø 19,05	Alu
	99-		R	R	**CF497**		Ø 19,05	Alu
1.6 16v, 4WD Eng.D16W1 (77kW)	99-		R	L	**CF498**		Ø 19,05	Alu
	99-		R	R	**CF497**		Ø 19,05	Alu
Insight I (ZE) 8/00-5/06								
1.0 Eng.ECA1/ MF2 (56kW)	00-04		R		**CF814**	Nabco	Ø 17,46	Alu
Integra I (DA1,2,4) 10/85-8/89								
1.5 (DA4) Eng.D15A1 (63kW)	85-89		R	L	**CF206**		Ø 19,05	Alu
	85-89		R	R	**CF207**		Ø 19,05	Alu
	85-89				**PF184**		Ø 22,20	Alu
Integra III (DC2,4) 11/97-10/01								
1.8 Type-R Eng.B18C6 (140kW)	97-01				**PZ152**	Nissin	Ø 15,87	Alu
Jazz III (GD)/ Fit 3/02-10/08								
1.2 DSi Eng.L12A1 (57kW)	02-		R		**CF553**		Ø 17,46	
	02-				**PF514**	Nissin	Ø 20,64	Alu
1.3 DSi Eng.L13A1 (61-63kW)	02-		R		**CF553**		Ø 17,46	
	02-				**PF514**	Nissin	Ø 20,64	Alu
Jazz IV (GE)/ Fit 11/08-10/10								
1.2 i-VTEC Eng.L12B2 (66kW)	08-				**CZ113**	Nissin	Ø 19,05	Alu
1.3 i-VTEC Eng.L13Z2 (73kW)	08-				**CZ113**	Nissin	Ø 19,05	Alu
1.4 Eng.L13Z1 (74kW)	08-				**CZ113**	Nissin	Ø 19,05	Alu
Jazz V 11/10-8/15								
1.2 Eng.L12B2 (66kW)	10-				**CZ113**	Nissin	Ø 19,05	Alu
1.4 Eng.L13Z2 (73kW)	10-				**CZ113**	Nissin	Ø 19,05	Alu
Jazz VI 9/15-								
1.3 Eng.L13B (75kW)	15-				**CZ113**	Nissin	Ø 19,05	Alu
Legend I (HS, KA) 1/86-12/90								
2.5 i (HS) Eng.C25A1 (110kW)	86-87				**PF256**		Ø 25,40	Alu, +BFR, +ABS

HONDA

		Spare Parts	F/R	L/R	FRITECH ref.		DIMENSIONS mm.	NOTE
2.5 i (HS) Eng.C25A2 (127kW)	87-88				**PF256**		Ø 25,40	Alu, +BFR, +ABS
2.7 i 24v (KA4), Coupe Eng.C27A1 (124kW)	7/88-90				**PF256**		Ø 25,40	Alu, +BFR, Sedan, +ABS
Logo (GA3) 3/99-3/02								
1.3 Eng.D13B7 (48kW)	99-02		R	L	**CF810**	Nissin	Ø 17,46	Alu
	99-02		R	R	**CF809**	Nissin	Ø 17,46	Alu
Prelude I Coupe (SN) 1/78-10/83								
1.6 Eng.EL (59-66kW)	81-82		R	L	**CF408**		Ø 17,46	Alu
	81-82		R	R	**CF409**		Ø 17,46	Alu
	11/78-81		R		**CF461**		Ø 17,46	Alu
	81-82				**PF181**		Ø 20,64	Alu
1.8 Eng.EK (74-77-66kW)	81-2/83		R	L	**CF408**		Ø 17,46	Alu
	2/83-12/83		R	L	**CF206**		Ø 19,05	Alu
	81-2/83		R	R	**CF409**		Ø 17,46	Alu
	2/83-12/83		R	R	**CF207**		Ø 19,05	Alu
	11/78-81		R		**CF461**		Ø 17,46	Alu
	2/83-12/83				**PF130**		Ø 20,64	Alu
	81-2/83				**PF181**		Ø 20,64	Alu
Prelude II (AB) 11/83-4/87								
1.8 EX Eng.ET2 (77kW)	-87		R		**CF461**		Ø 17,46	Ch DC000147-, Alu
	83-		R		**CF435**		Ø 19,05	Ch -DC000146, Alu
	83-				**PF130**		Ø 20,64	Ch -DC000146, Alu
1.8 EX Eng.ET4 (74kW)	-87		R		**CF461**		Ø 17,46	Ch DC000147-, Alu
	85-		R		**CF435**		Ø 19,05	Ch -DC000146, Alu
	85-				**PF130**		Ø 20,64	Ch -DC000146, Alu
Prelude IV (BB) 2/92-9/96								
2.0 i 16v (BB3) Eng.F20A/ B2/ 3/ 4/ 5/ 6 (98kW)	92-				**PZ065**	Nissin	Ø 15,87	Alu
2.2 i 16v Vtec (BB1, 4) Eng.H22A2 (136kW)	93-				**PZ065**	Nissin	Ø 15,87	Alu
2.3 i 16v (BB2) Eng.H23A2/ 3 (118kW)	92-				**PZ065**	Nissin	Ø 15,87	Alu
Prelude V (BB) 10/96-12/01								
2.0 16v (BB9) Eng.F20A4 (98kW)	96-				**PZ065**	Nissin	Ø 15,87	Alu
2.2 16v (BB6, BB8) Eng.H22A5 (136-147kW)	96-				**PZ065**	Nissin	Ø 15,87	Alu
Quintet (SU) 2/80-12/84								
1.6 EX Eng.EL/ EP (59-66kW)	11/80-83		R	L	**CF408**		Ø 17,46	Alu
	11/80-83		R	R	**CF409**		Ø 17,46	Alu
	-80		R		**CF461**		Ø 17,46	Alu
	11/80-83				**PF181**		Ø 20,64	Alu
Shuttle (RA) 10/94-6/02								
2.2 16v Eng.F22B8 (110kW)	96-98				**PF255**	Nissin	Ø 25,40	Alu, +BFR
Stream I (RN) 5/01-9/05								
1.7 16v Eng.D17A2 (92kW)	01-				**CZ114**		Ø 19,05	Alu
	01-				**PZ154**	Nissin	Ø 15,87	Alu
2.0 16v Eng.K20A1 (115kW)	01-				**CZ115**		Ø 19,05	Alu

HONDA USA

Civic								
All models	-02		R	L	**CF576**		Ø 19,05	Alu
	-02		R	R	**CF574**		Ø 19,05	Alu

HYUNDAI

Accent I (X-3)/Pony III 10/94-1/00								
1.3 i, 12v Eng.G4EH (44-55-62kW)	94-00		R	L	**CF710**		Ø 19,05	Alu
	94-00		R	R	**CF709**		Ø 19,05	Alu
	6/96-				**CZ132**		Ø 20,64	
1.5 16v Eng.G4FK (76kW)	95-00		R	L	**CF710**		Ø 19,05	Alu
	95-00		R	R	**CF709**		Ø 19,05	Alu
1.5i 12v Eng.G4EK (65kW)	94-00		R	L	**CF710**		Ø 19,05	Alu
	94-00		R	R	**CF709**		Ø 19,05	Alu
	6/96-				**CZ132**		Ø 20,64	
1.5i 16v Eng.G4K (73kW)	95-00		R	L	**CF710**		Ø 19,05	Alu
	95-00		R	R	**CF709**		Ø 19,05	Alu
	6/96-				**CZ132**		Ø 20,64	

HYUNDAI

		Spare Parts	F/R	L/R	FRITECH ref.		DIMENSIONS mm.	NOTE
Accent II (LC)/Verna 1/00-6/06								
1.3 Eng.G4EA (55-61-62-63kW)	00-7/02		R	L	**CF252**	Luc	Ø 19,05	Alu
	8/02-06		R	L	**CF585**		Ø 17,78	Alu
	00-7/02		R	R	**CF253**	Luc	Ø 19,05	Alu
	8/02-06		R	R	**CF586**		Ø 17,78	Alu
	00-06				**PF946**	Man	Ø 22,20	Alu, +ABS
	00-				**CZ132**		Ø 20,64	
1.5 Eng.G4EB/K (65-66kW)	00-7/02		R	L	**CF252**	Luc	Ø 19,05	Alu
	8/02-06		R	L	**CF585**		Ø 17,78	Alu
	00-7/02		R	R	**CF253**	Luc	Ø 19,05	Alu
	8/02-06		R	R	**CF586**		Ø 17,78	Alu
	00-06				**PF946**	Man	Ø 22,20	Alu, +ABS
	00-				**CZ132**		Ø 20,64	
1.5 Eng.G4EC-G (75kW)	00-8/02		R	L	**CF252**	Luc	Ø 19,05	Alu
	9/02-06		R	L	**CF585**		Ø 17,78	Alu
	00-8/02		R	R	**CF253**	Luc	Ø 19,05	Alu
	9/02-06		R	R	**CF586**		Ø 17,78	Alu
	00-06				**PF946**	Man	Ø 22,20	Alu, +ABS
	00-				**CZ132**		Ø 20,64	
1.5 Eng.G4FK (73kW)	99-8/02		R	L	**CF252**	Luc	Ø 19,05	Alu
	9/02-		R	L	**CF585**		Ø 17,78	Alu
	99-8/02		R	R	**CF253**	Luc	Ø 19,05	Alu
	9/02-		R	R	**CF586**		Ø 17,78	Alu
	99-02				**PF946**	Man	Ø 22,20	Alu, +ABS
	99-02				**PF945**	Man	Ø 22,20	Alu, -ABS
1.5 CRDi Eng.D3EA (60kW)	4/02-8/02		R	L	**CF252**	Luc	Ø 19,05	Alu
	9/02-06		R	L	**CF585**		Ø 17,78	Alu
	4/02-8/02		R	R	**CF253**	Luc	Ø 19,05	Alu
	9/02-06		R	R	**CF586**		Ø 17,78	Alu
	02-06				**PF946**	Man	Ø 22,20	Alu, +ABS
1.6 Eng.G4ED-G (77kW)	9/02-06		R	L	**CF585**		Ø 17,78	Alu
	9/02-06		R	R	**CF586**		Ø 17,78	Alu
	02-06				**PF946**	Man	Ø 22,20	Alu, +ABS
	02-06				**PF945**	Man	Ø 22,20	Alu, -ABS
	02-				**CZ132**		Ø 20,64	
Accent III (MC) 6/06-10/10								
1.4 Eng.G4EE (71kW)	06-		R		**CF834**		Ø 17,46	Alu
	06-10				**PF949**	Kasco	Ø 22,20	Alu, +ABS, -ESP
1.5 CRDi Eng.D4FA (81kW)	06-		R		**CF834**		Ø 17,46	Alu
	06-10				**PF923**	Kasco	Ø 22,20	Alu, +ESP
1.6 GLS Eng.G4ED (82kW)	06-		R		**CF834**		Ø 17,46	Alu
	06-10				**PF949**	Kasco	Ø 22,20	Alu, +ABS, -ESP
Accent IV (RB) 11/10-								
1.4 Eng.G4FA (79kW)	10-		R		**CF862**		Ø 17,78	Alu
1.6 Eng.G4FC (90kW)	10-		R		**CF862**		Ø 17,78	Alu
Atos (MX)/ Amica 2/98-8/08								
1.0 i Eng.G4HC (40kW)	2/98-5/02		R	L	**CF585**		Ø 17,78	Alu
	2/98-5/02		R	R	**CF586**		Ø 17,78	Alu
	2/98-				**PF518**		Ø 20,64	Alu, -ABS
1.0 i Eng.G4HC-E (43kW)	01-5/02		R	L	**CF585**		Ø 17,78	Alu
	01-5/02		R	R	**CF586**		Ø 17,78	Alu
1.1 Eng.G4HG (46kW)	04-		R	L	**CF855**		Ø 15,87	Alu
	04-		R	R	**CF859**		Ø 15,87	Alu
Atos Prime (MX)/ Amica 8/99-8/08								
1.0 i Eng.G4HC (40kW)	05-		R	L	**CF855**		Ø 15,87	Alu
	99-5/02		R	L	**CF585**		Ø 17,78	Alu
	05-		R	R	**CF859**		Ø 15,87	Alu
	99-5/02		R	R	**CF586**		Ø 17,78	Alu
	99-				**PF518**		Ø 20,64	Alu, -ABS
1.0 i Eng.G4HC-E (43kW)	05-		R	L	**CF855**		Ø 15,87	Alu
	01-5/02		R	L	**CF585**		Ø 17,78	Alu
	05-		R	R	**CF859**		Ø 15,87	Alu
	01-5/02		R	R	**CF586**		Ø 17,78	Alu
	01-				**PF856**		Ø 20,64	Alu, +ABS

		Spare Parts	F/R	L/R	FRITECH ref.		DIMENSIONS mm.	NOTE
1.0 i Eng.G4HC-E (43kW)	01-				**PF518**		Ø 20,64	Alu, -ABS
1.1 Eng.G4HD (43kW)	03-		R	L	**CF855**		Ø 15,87	Alu
	03-		R	R	**CF859**		Ø 15,87	Alu
	03-				**PF856**		Ø 20,64	Alu, +ABS
1.1 12v Eng.G4HG (46kW)	05-		R	L	**CF855**		Ø 15,87	Alu
	05-		R	R	**CF859**		Ø 15,87	Alu
	05-				**PF856**		Ø 20,64	Alu, +ABS
Coupe I (RD)/Tiburon 8/96-4/02								
1.6 16v Eng.G4GR/ G4DR (84kW)	97-02		R	L	**CF311**		Ø 19,05	Alu
	97-02		R	R	**CF312**		Ø 19,05	Alu
	96-02				**PF904**	Man	Ø 22,20	Alu, +ABS
	96-02				**PF836**	Man	Ø 22,20	Alu, -ABS
	96-				**CZ130**		Ø 20,64	Alu
2.0 16v Eng.G4GF (102kW)	96-02				**PF904**	Man	Ø 22,20	Alu, +ABS
	96-02				**PF951**	Man	Ø 25,40	Alu, +ABS
	96-02				**PF836**	Man	Ø 22,20	Alu, -ABS
	96-				**CZ130**		Ø 20,64	Alu
2.0 16v Eng.G4GF-EG (99kW)	01-02				**PF951**	Man	Ø 25,40	Alu, +ABS
	01-02				**PF836**	Man	Ø 22,20	Alu, -ABS
Coupe II (GK) 3/02-12/09								
1.6 16v Eng.G4ED-G (77-79kW)	02-				**PF951**	Man	Ø 25,40	Alu, +ABS
	02-				**CZ130**		Ø 20,64	Alu, M/T
2.0 Eng.G4GC-G (100kW)	01-6/03				**PF951**	Man	Ø 25,40	Alu, +ABS, -ESP
	01-				**CZ130**		Ø 20,64	Alu, M/T
2.0 Eng.G4GC-G (102kW)	02-6/03				**PF951**	Man	Ø 25,40	Alu, +ABS, -ESP
	02-				**CZ130**		Ø 20,64	Alu, M/T
2.0 Eng.G4GC-G (105kW)	03-				**PF951**	Man	Ø 25,40	Alu, +ABS
	03-				**CZ130**		Ø 20,64	Alu, M/T
2.7 V6 Eng.G6BA-G (121-123kW)	02-09				**PF951**	Man	Ø 25,40	Alu, +ABS, -ESP
Elantra I (XD) 6/00-5/11								
1.6 Eng.G4GA (82kW)	03-		R	L	**CF252**	Luc	Ø 19,05	Alu
	03-		R	R	**CF253**	Luc	Ø 19,05	Alu
1.6 16v Eng.G4ED (66kW)	00-03		R	L	**CF252**	Luc	Ø 19,05	Alu
	00-03		R	R	**CF253**	Luc	Ø 19,05	Alu
	00-03				**CZ130**		Ø 20,64	Alu
1.6 16v Eng.G4ED-G (77kW)	03-		R	L	**CF252**	Luc	Ø 19,05	Alu
	03-		R	R	**CF253**	Luc	Ø 19,05	Alu
	03-				**CZ130**		Ø 20,64	Alu
1.6 16v Eng.G4ED-G (79kW)	00-		R	L	**CF252**	Luc	Ø 19,05	Alu
	00-		R	R	**CF253**	Luc	Ø 19,05	Alu
	00-				**CZ130**		Ø 20,64	Alu
1.8 Eng.G4BB (79kW)	00-03		R	L	**CF252**	Luc	Ø 19,05	Alu
	00-03		R	R	**CF253**	Luc	Ø 19,05	Alu
1.8 Eng.G4GB (98kW)	02-		R	L	**CF252**	Luc	Ø 19,05	Alu
	02-		R	R	**CF253**	Luc	Ø 19,05	Alu
1.8 Eng.G4GM-G (97kW)	00-		R	L	**CF252**	Luc	Ø 19,05	Alu
	00-		R	R	**CF253**	Luc	Ø 19,05	Alu
	00-				**CZ130**		Ø 20,64	Alu
2.0 Eng.G4GC-G (102kW)	00-		R	L	**CF252**	Luc	Ø 19,05	Alu
	00-		R	R	**CF253**	Luc	Ø 19,05	Alu
	00-				**CZ130**		Ø 20,64	Alu
2.0 Eng.G4GC-G (104kW)	00-		R	L	**CF252**	Luc	Ø 19,05	Alu
	00-		R	R	**CF253**	Luc	Ø 19,05	Alu
	00-				**CZ130**		Ø 20,64	Alu
2.0 Eng.G4GC-G (105kW)	03-		R	L	**CF252**	Luc	Ø 19,05	Alu
	03-		R	R	**CF253**	Luc	Ø 19,05	Alu
	03-				**CZ130**		Ø 20,64	Alu
2.0 CRDi Eng.D4EA (83kW)	01-		R	L	**CF252**	Luc	Ø 19,05	Alu
	01-		R	R	**CF253**	Luc	Ø 19,05	Alu
	01-				**CZ130**		Ø 20,64	Alu
Excel I (X1) 1/86-1/90								
1.5 Eng.G15B (53kW)	86-88		R		**CF269**		Ø 19,05	
	89-90		R		**CF471**		Ø 19,05	

HYUNDAI

		Spare Parts	F/R	L/R	FRITECH ref.		DIMENSIONS mm.	NOTE
Excel II (X2) 1/90-5/96								
1.3 Eng.G4DG (43kW)	92-93		R	L	**CF538**		Ø 20,64	Alu
	92-93		R	R	**CF539**		Ø 20,64	Alu
	90-91		R		**CF472**		Ø 20,64	
1.5 Eng.G4DJ (53kW)	92-93		R	L	**CF538**		Ø 20,64	Alu
	92-93		R	R	**CF539**		Ø 20,64	Alu
	90-91		R		**CF472**		Ø 20,64	
Galloper I 8/91-7/98								
2.5 TD Eng.4D56T (62kW)	91-98		R	L	**CF795**		Ø 23,81	Alu
	91-98		R	R	**CF986**		Ø 23,81	Alu
2.5 TD intercooler Eng.4D56T (70kW)	91-98		R	L	**CF795**		Ø 23,81	Alu
	91-98		R	R	**CF986**		Ø 23,81	Alu
Galloper II (JK-01) 8/98-12/03								
2.5 TD intercooler Eng.D4BH (73kW)	98-		R		**CF795**		Ø 23,81	Alu
Getz (TB) 9/02-12/11								
1.1 Eng.G4HD/ SOCH 12v (46kW)	02-		R	L	**CF585**		Ø 17,78	Alu
	02-		R	R	**CF586**		Ø 17,78	Alu
	02-				**PF631**	Man	Ø 22,20	Alu, +ABS, -ESP
	9/02-				**PF517**		Ø 22,20	Alu, -ABS
	02-				**CZ131**		Ø 19,05	Alu
1.1 Eng.G4HG (49kW)	05-		R	L	**CF585**		Ø 17,78	Alu
	05-		R	R	**CF586**		Ø 17,78	Alu
	05-				**PF631**	Man	Ø 22,20	Alu, +ABS, -ESP
	05-				**PF517**		Ø 22,20	Alu, -ABS
	05-				**CZ131**		Ø 19,05	Alu
1.3 Eng.G4EA (60kW)	02-		R	L	**CF585**		Ø 17,78	Alu
	02-		R	R	**CF586**		Ø 17,78	Alu
	02-				**PF631**	Man	Ø 22,20	Alu, +ABS, -ESP
	9/02-				**PF517**		Ø 22,20	Alu, -ABS
	02-				**CZ132**		Ø 20,64	
1.3 Eng.G4EA (63kW)	03-		R	L	**CF585**		Ø 17,78	Alu
	03-		R	R	**CF586**		Ø 17,78	Alu
	03-				**PF631**	Man	Ø 22,20	Alu, +ABS, -ESP
	11/04-				**PF517**		Ø 22,20	Alu, -ABS
	03-				**CZ132**		Ø 20,64	
1.4 16v Eng.G4EE (71kW)	05-		R	L	**CF585**		Ø 17,78	Alu
	05-		R	R	**CF586**		Ø 17,78	Alu
	05-				**PF631**	Man	Ø 22,20	Alu, +ABS, -ESP
	05-				**PF517**		Ø 22,20	Alu, -ABS
	05-				**CZ132**		Ø 20,64	
1.5 CRDi Eng.D3EA (60kW)	03-		R	L	**CF585**		Ø 17,78	Alu
	03-		R	R	**CF586**		Ø 17,78	Alu
	03-				**PF631**	Man	Ø 22,20	Alu, +ABS, -ESP
	11/04-				**PF517**		Ø 22,20	Alu, -ABS
1.5 CRDi Eng.D4FA (65kW)	05-		R	L	**CF585**		Ø 17,78	Alu
	05-		R	R	**CF586**		Ø 17,78	Alu
	05-				**PF631**	Man	Ø 22,20	Alu, +ABS, -ESP
	05-				**PF517**		Ø 22,20	Alu, -ABS
1.5 CRDi Eng.D4FA (81kW)	05-		R	L	**CF585**		Ø 17,78	Alu
	05-		R	R	**CF586**		Ø 17,78	Alu
	05-				**PF631**	Man	Ø 22,20	Alu, +ABS, -ESP
	05-				**PF517**		Ø 22,20	Alu, -ABS
1.5i Eng.G4ER (73kW)	03-				**CZ132**		Ø 20,64	
1.6 Eng.G4ED-G (77kW)	02-		R	L	**CF585**		Ø 17,78	Alu
	02-		R	R	**CF586**		Ø 17,78	Alu
	02-				**PF631**	Man	Ø 22,20	Alu, +ABS, -ESP
	02-				**PF517**		Ø 22,20	Alu, -ABS
	02-				**CZ132**		Ø 20,64	
i10 I (PA) 5/08-12/13								
1.0 Eng.G3LA (51kW)	11-		R	L	**CF855**		Ø 15,87	Alu
	11-		R	R	**CF859**		Ø 15,87	Alu
1.1 12v Eng.G4HG (49kW)	08-		R	L	**CF855**		Ø 15,87	Alu
	08-		R	R	**CF859**		Ø 15,87	Alu

		Spare Parts	F/R	L/R	FRITECH ref.		DIMENSIONS mm.	NOTE
1.1 12V Eng.G4HG (51kW)	11-		R	L	**CF855**		Ø 15,87	Alu
	11-		R	R	**CF859**		Ø 15,87	Alu
1.1 CRDi Eng.D3FA (55kW)	08-		R	L	**CF855**		Ø 15,87	Alu
	08-		R	R	**CF859**		Ø 15,87	Alu
1.2 16v Eng.G4LA (57kW)	08-		R	L	**CF855**		Ø 15,87	Alu
	08-		R	R	**CF859**		Ø 15,87	Alu
1.2 16V Eng.G4LA (63kW)	11-		R	L	**CF855**		Ø 15,87	Alu
	11-		R	R	**CF859**		Ø 15,87	Alu
i20 I (PB, PBT) 3/09-1/15								
1.1 CRDi Eng.D3FA (55kW)	12-		R	L	**CF862**		Ø 17,78	Alu
	12-		R	R	**CF863**		Ø 17,78	Alu
1.2 Eng.G4LA (57kW)	09-		R	L	**CF862**		Ø 17,78	Alu
	09-		R	R	**CF863**		Ø 17,78	Alu
1.2 Eng.G4LA (63kW)	12-		R	L	**CF862**		Ø 17,78	Alu
	12-		R	R	**CF863**		Ø 17,78	Alu
1.4 Eng.G4FA (74kW)	09-		R	L	**CF862**		Ø 17,78	Alu
	09-		R	R	**CF863**		Ø 17,78	Alu
1.4 CRDi Eng.D4FC (55kW)	09-		R	L	**CF862**		Ø 17,78	Alu
	09-		R	R	**CF863**		Ø 17,78	Alu
1.4 CRDi Eng.D4FC (66kW)	09-		R	L	**CF862**		Ø 17,78	Alu
	09-		R	R	**CF863**		Ø 17,78	Alu
1.6 CRDi Eng.D4FB (85kW)	09-		R	L	**CF862**		Ø 17,78	Alu
	09-		R	R	**CF863**		Ø 17,78	Alu
1.6 CRDi Eng.D4FB (94kW)	09-		R	L	**CF862**		Ø 17,78	Alu
	09-		R	R	**CF863**		Ø 17,78	Alu
i20 II, Coupe (GB) 1/15-								
1.1 CRDi Eng.D3FA (55kW)	15-		R		**CF862**		Ø 17,78	Alu
1.2 Eng.G4LA (55kW)	15-		R		**CF862**		Ø 17,78	Alu
1.2, Blue Eng.G4LA (62kW)	15-		R		**CF862**		Ø 17,78	Alu
1.4 Eng.G4FA/ G4LC (74kW)	15-		R		**CF862**		Ø 17,78	Alu
1.4 CRDi Eng.D4FC (66kW)	15-		R		**CF862**		Ø 17,78	Alu
i30 I (FD), SW 9/07-4/12								
1.4 Eng.G4FA (77kW)	07-				**PF953**		Ø 22,20	Alu, +ESP
1.4 16v Eng.G4FA (80kW)	07-				**PF953**		Ø 22,20	Alu, +ESP
1.6 Eng.G4FC (85kW)	07-				**PF953**		Ø 22,20	Alu, +ESP
1.6 16v Eng.G4FC (90kW)	07-				**PF953**		Ø 22,20	Alu, +ESP
1.6 16v Eng.G4FC (93kW)	08-				**PF953**		Ø 22,20	Alu, +ESP
1.6 CRDi Eng.D4FB (94kW)	10-				**PF953**		Ø 22,20	Alu, +ESP
1.6 CRDi 16v Eng.D4FB (85kW)	07-				**PF953**		Ø 22,20	Alu, +ESP
1.6 CRDi 16v Eng.D4FB-L (66kW)	07-				**PF953**		Ø 22,20	Alu, +ESP
2.0 16v Eng.G4GC (105kW)	07-				**PF953**		Ø 22,20	Alu, +ESP
2.0 CRDi Eng.D4EA (103kW)	07-				**PF953**		Ø 22,20	Alu, +ESP
ix35 (LM, EL, ELH) 1/10-12/15								
2.0 16v, Allrad Eng.G4KD (120kW)	10-				**CZ130**		Ø 20,64	Alu
2.0 CRDi, Allrad Eng.D4HA (100kW)	10-				**CZ130**		Ø 20,64	Alu
2.0 CRDi, Allrad Eng.D4HA (135kW)	10-				**CZ130**		Ø 20,64	Alu
Lantra 1/86-6/90								
1.2 Pick-up (40kW)	86-6/90		R		**CF472**		Ø 20,64	
Lantra I (J-1) 10/90-11/95								
1.5 Eng.G15B/ G4DJ (63-53kW)	91-95		R	L	**CF311**		Ø 19,05	Alu
	91-95		R	R	**CF312**		Ø 19,05	Alu
	90-95				**CZ125**		Ø 20,64	
1.6 i.e. 16v Eng.G4CR (78-84kW)	91-95		R	L	**CF311**		Ø 19,05	Alu
	91-95		R	R	**CF312**		Ø 19,05	Alu
	90-95				**CZ125**		Ø 20,64	
1.8 i.e. 16v Eng.G4CN (93kW)	92-95		R	L	**CF311**		Ø 19,05	Alu
	92-95		R	R	**CF312**		Ø 19,05	Alu
	90-95				**CZ125**		Ø 20,64	
Lantra II (J-2), SW 11/95-9/00								
1.5 12v Eng.G4EK (65kW)	96-00		R	L	**CF311**		Ø 19,05	Alu
	96-00		R	R	**CF312**		Ø 19,05	Alu
	96-00				**PF904**	Man	Ø 22,20	Alu, +ABS
	96-00				**PF836**	Man	Ø 22,20	Alu, -ABS
	96-				**CZ130**		Ø 20,64	Alu

HYUNDAI

		Spare Parts	F/R	L/R	FRITECH ref.		DIMENSIONS mm.	NOTE
1.6 16v Eng.G4GR/ G4DR (84kW)	95-00		R	L	**CF311**		Ø 19,05	Alu
	95-00		R	R	**CF312**		Ø 19,05	Alu
	95-00				**PF904**	Man	Ø 22,20	Alu, +ABS
	95-00				**PF836**	Man	Ø 22,20	Alu, -ABS
	95-				**CZ130**		Ø 20,64	Alu
1.6 i Eng.G4GR (66kW)	95-00		R	L	**CF311**		Ø 19,05	Alu
	95-00		R	R	**CF312**		Ø 19,05	Alu
	95-00				**PF904**	Man	Ø 22,20	Alu, +ABS
	95-00				**PF836**	Man	Ø 22,20	Alu, -ABS
1.8 16v Eng.G4GM (94kW)	95-00		R	L	**CF311**		Ø 19,05	Alu
	95-00		R	R	**CF312**		Ø 19,05	Alu
	95-00				**PF904**	Man	Ø 22,20	Alu, +ABS
	95-00				**PF836**	Man	Ø 22,20	Alu, -ABS
	95-				**CZ130**		Ø 20,64	Alu
1.9 D Eng.XUD9 (50kW)	98-00		R	L	**CF311**		Ø 19,05	Alu
	98-00		R	R	**CF312**		Ø 19,05	Alu
	98-00				**PF904**	Man	Ø 22,20	Alu, +ABS
	98-				**CZ130**		Ø 20,64	Alu
2.0 16v Eng.G4GF (102kW)	96-00				**PF904**	Man	Ø 22,20	Alu, +ABS
	96-				**CZ130**		Ø 20,64	Alu
Matrix (FC) 6/01-12/08								
1.5 CRDi Eng.D3EA (60kW)	6/01-		R	L	**CF252**	Luc	Ø 19,05	Alu
	6/01-		R	R	**CF253**	Luc	Ø 19,05	Alu
	6/01-8/03				**PF632**		Ø 23,81	Alu, +ABS
	6/01-				**PF519**		Ø 23,81	Alu, -ABS
	01-				**CZ130**		Ø 20,64	Alu
1.5 CRDi Eng.D4FA (75kW)	04-		R	L	**CF252**	Luc	Ø 19,05	Alu
	04-		R	R	**CF253**	Luc	Ø 19,05	Alu
	04-				**PF632**		Ø 23,81	Alu, +ABS
	04-				**PF519**		Ø 23,81	Alu, -ABS
1.5 CRDi Eng.D4FA (81kW)	06-		R	L	**CF252**	Luc	Ø 19,05	Alu
	06-		R	R	**CF253**	Luc	Ø 19,05	Alu
1.6 Eng.G4ED-G (76kW)	6/01-		R	L	**CF252**	Luc	Ø 19,05	Alu
	6/01-		R	R	**CF253**	Luc	Ø 19,05	Alu
	6/01-8/03				**PF632**		Ø 23,81	Alu, +ABS
	6/01-				**PF519**		Ø 23,81	Alu, -ABS
	01-				**CZ130**		Ø 20,64	Alu
1.6 Eng.G4ED-L (66kW)	02-05		R	L	**CF252**	Luc	Ø 19,05	Alu
	02-05		R	R	**CF253**	Luc	Ø 19,05	Alu
	02-05				**CZ130**		Ø 20,64	Alu
1.8 Eng.G4GB-G (90kW)	6/01-		R	L	**CF252**	Luc	Ø 19,05	Alu
	6/01-		R	R	**CF253**	Luc	Ø 19,05	Alu
	6/01-8/03				**PF632**		Ø 23,81	Alu, +ABS
	6/01-				**PF519**		Ø 23,81	Alu, -ABS
	01-				**CZ130**		Ø 20,64	Alu
Pony I 6/74-9/89								
1.2, Wagon Eng.4G36 (40-41-59kW)	82-85		R	L	**CF378**	Mit.	Ø 19,05	
	82-85		R	R	**CF379**	Mit.	Ø 19,05	
	82-85		R		**CF358**		Ø 17,78	
	85-88		R		**CF269**		Ø 19,05	
	80-85		R		**CF076**		Ø 20,64	
	90-91		R		**CF472**		Ø 20,64	
1.4, Wagon Eng.4G33 (50-68kW)	82-85		R	L	**CF378**	Mit.	Ø 19,05	
	82-85		R	R	**CF379**	Mit.	Ø 19,05	
	85-88		R		**CF269**		Ø 19,05	
	80-85		R		**CF076**		Ø 20,64	
	90-91		R		**CF472**		Ø 20,64	
1.5 Eng.G15B/ G4DJ (51-53kW)	-85		R	L	**CF378**	Mit.	Ø 19,05	
	-85		R	R	**CF379**	Mit.	Ø 19,05	
	85-88		R		**CF269**		Ø 19,05	
	86-8/89		R		**CF471**		Ø 19,05	
	-89		R		**CF472**		Ø 20,64	

		Spare Parts	F/R	L/R	FRITECH ref.		DIMENSIONS mm.	NOTE
Pony II (X-2) 10/89-1/95								
1.3 Eng.G13B (49kW)	91-94		R	L	**CF538**		Ø 20,64	Alu
	91-94		R	R	**CF539**		Ø 20,64	Alu
	89-95				**CZ125**		Ø 20,64	
1.3 Eng.G4DG (43kW)	91-94		R	L	**CF538**		Ø 20,64	Alu
	91-94		R	R	**CF539**		Ø 20,64	Alu
	89-95				**CZ125**		Ø 20,64	
1.5 Eng.G15B/ G4DJ (53-61-62kW)	91-94		R	L	**CF538**		Ø 20,64	Alu
	91-94		R	R	**CF539**		Ø 20,64	Alu
	89-95				**CZ125**		Ø 20,64	
S Coupe (SLC) 2/90-5/96								
1.5 Eng.G15B/ G4DJ (62-53kW)	3/90-6/92		R		**CF472**		Ø 20,64	
	90-96				**CZ125**		Ø 20,64	
1.5 i Eng.G4EK (65kW)	91-94		R	L	**CF538**		Ø 20,64	Alu
	91-94		R	R	**CF539**		Ø 20,64	Alu
	90-96				**CZ125**		Ø 20,64	
1.5 i T. Eng.G4EK-TC (85kW)	91-94		R	L	**CF538**		Ø 20,64	Alu
	91-94		R	R	**CF539**		Ø 20,64	Alu
	91-96				**CZ125**		Ø 20,64	
Santa Fe I (SM) 2/01-2/06								
2.0 Eng.G4BP (99kW)	01-				**PF576**		Ø 25,40	Alu
	01-06				**CZ130**		Ø 20,64	Alu
2.0 CRDi, 4WD Eng.D4EA (83kW)	01-		R	L	**CF816**		Ø 20,64	Alu
	01-		R	R	**CF817**		Ø 20,64	Alu
	01-				**PF576**		Ø 25,40	Alu
	01-06				**CZ130**		Ø 20,64	Alu
2.0 CRDi, 4WD Eng.D4EA (92kW)	03-06				**CZ130**		Ø 20,64	Alu
2.4 16v, 4WD Eng.G4JS-G (100-107kW)	01-		R	L	**CF816**		Ø 20,64	Alu
	01-		R	R	**CF817**		Ø 20,64	Alu
	01-				**PF576**		Ø 25,40	Alu
	01-06				**CZ130**		Ø 20,64	Alu
2.7 V6 4WD Eng.G6BA-G (127-129kW)	01-		R	L	**CF816**		Ø 20,64	Alu
	01-		R	R	**CF817**		Ø 20,64	Alu
	01-				**PF576**		Ø 25,40	Alu
	01-06				**CZ130**		Ø 20,64	Alu
Santa Fe II (CM) 3/06-3/12								
2.2 CRDi, 4WD Eng.D4EB (114kW)	06-				**PF950**	Man	Ø 26,99	Alu, +ESP
2.2 CRDI, 4WD Eng.D4HB (145kW)	09-12				**PF950**	Man	Ø 26,99	Alu, +ESP
2.7 V6, 4WD Eng.G6EA (139kW)	06-				**PF950**	Man	Ø 26,99	Alu, +ESP
Solaris (RB) 11/10-								
1.4 Eng.G4FA (79kW)	10-		R		**CF862**		Ø 17,78	Alu
Sonata I (Y-2) 9/88-10/93								
1.8 i Eng.G4M (70kW)	89-90		R	L	**CF469**		Ø 20,64	
	89-90		R	R	**CF470**		Ø 20,64	
	1/91-12/91		R		**CF511**		Ø 20,64	
	88-93				**CZ125**		Ø 20,64	
2.0 i Eng.G4CP (74kW)	89-90		R	L	**CF469**		Ø 20,64	
	89-90		R	R	**CF470**		Ø 20,64	
	1/91-12/91		R		**CF511**		Ø 20,64	
	88-91				**CZ125**		Ø 20,64	
2.0 i Eng.G4CP-U (80kW)	91-93				**CZ125**		Ø 20,64	
2.0 i 16v Eng.G4CP-D (96-102kW)	91-93				**CZ125**		Ø 20,64	
2.4 i Eng.G4CS (82-84-90kW)	89-90		R	L	**CF469**		Ø 20,64	
	89-90		R	R	**CF470**		Ø 20,64	
	1/91-12/91		R		**CF511**		Ø 20,64	
	88-91				**CZ125**		Ø 20,64	
3.0i V6 Eng.G6AT (107-104kW)	91-93				**CZ125**		Ø 20,64	
Sonata II (Y-3) 5/93-6/98								
1.8 GLS Eng.G4DM (63kW)	96-98				**CZ125**		Ø 20,64	
1.8 i Eng.G4CM (72kW)	93-96		R	L	**CF311**		Ø 19,05	Alu
	93-96		R	R	**CF312**		Ø 19,05	Alu
	93-98				**CZ125**		Ø 20,64	
2.0 i Eng.G4CP (70kW)	96-98		R	L	**CF311**		Ø 19,05	Alu
	96-98		R	R	**CF312**		Ø 19,05	Alu

HYUNDAI

		Spare Parts	F/R	L/R	FRITECH ref.		DIMENSIONS mm.	NOTE
2.0 i Eng.G4CP (70kW)	96-98				**CZ125**		Ø 20,64	
2.0 i Eng.G4CP (77kW)	94-96		R	L	**CF311**		Ø 19,05	Alu
	94-96		R	R	**CF312**		Ø 19,05	Alu
	94-96				**CZ125**		Ø 20,64	
2.0 i 16v Eng.G4CP-D (96-102kW)	7/93-98		R	L	**CF311**		Ø 19,05	Alu
	7/93-98		R	R	**CF312**		Ø 19,05	Alu
	93-98				**CZ125**		Ø 20,64	
2.0 i 16v Eng.G4CP-DM (92kW)	96-98		R	L	**CF311**		Ø 19,05	Alu
	96-98		R	R	**CF312**		Ø 19,05	Alu
	96-98				**CZ125**		Ø 20,64	
3.0i V6 Eng.G6AT (107-104kW)	93-98				**CZ125**		Ø 20,64	
Sonata III (EF) 3/98-10/01								
2.0 16v Eng.G4JP-G (100kW)	98-01		R	L	**CF253**		Ø 19,05	Alu
	98-01		R	R	**CF252**		Ø 19,05	Alu
	98-01				**CZ130**		Ø 20,64	Alu
2.4 16v Eng.G4JS (105kW)	98-01		R	L	**CF253**		Ø 19,05	Alu
	98-01		R	R	**CF252**		Ø 19,05	Alu
	98-01				**CZ130**		Ø 20,64	Alu
2.5 V6 24v Eng.G6BV-G (118kW)	98-01		R	L	**CF253**		Ø 19,05	Alu
	98-01		R	R	**CF252**		Ø 19,05	Alu
	98-01				**CZ130**		Ø 20,64	Alu
Sonata V (NF) 1/05-12/09								
2.0 CRDi Eng.D4EA-L (100kW)	06-				**PF948**	Man	Ø 25,40	Alu
2.0 CRDi Eng.G4DF (103kW)	06-				**PF948**	Man	Ø 25,40	Alu
2.0 VVTi GLS Eng.G4BPE (106kW)	05-				**PF948**	Man	Ø 25,40	Alu
Starex (H1) 6/97-								
2.4, 4WD Eng.G4BS (82kW)	97-		R	L	**CF847**		Ø 22,20	Alu
	97-		R	R	**CF848**		Ø 22,20	Alu
2.5 TD, 4WD Eng.D4BF (59kW)	97-		R	L	**CF847**		Ø 22,20	Alu
	97-		R	R	**CF848**		Ø 22,20	Alu
Stellar 10/83-12/91								
1.4 Eng.4G33 (50-68kW)	86-		R	L	**CF547**		Ø 20,64	
	86-		R	R	**CF548**		Ø 20,64	
	83-85		R		**CF007**		Ø 17,78	
	85-86		R		**CF095**		Ø 22,20	
1.6 Eng.4G32 (55-74kW)	87-91		R	L	**CF547**		Ø 20,64	
	87-91		R	R	**CF548**		Ø 20,64	
	84-85		R		**CF007**		Ø 17,78	
	85-87		R		**CF095**		Ø 22,20	
Terracan (HP) 12/01-7/07								
2.5 TD Eng.D4BH (73-65-77kW)	01-		R	L	**CF983**		Ø 19,05	Alu
	01-		R	R	**CF984**		Ø 19,05	Alu
	-12/06				**CZ122**		Ø 20,64	
2.9 CRDi Eng.HJ3 (110kW)	01-		R	L	**CF983**		Ø 19,05	Alu
	01-		R	R	**CF984**		Ø 19,05	Alu
	01-				**PZ153**	Valeo	Ø 15,87	Alu
2.9 CRDi Eng.HJ3 (120kW)	03-		R	L	**CF983**		Ø 19,05	Alu
	03-		R	R	**CF984**		Ø 19,05	Alu
	03-				**PZ153**	Valeo	Ø 15,87	Alu
3.5 i V6 4WD Eng.G6CU (143kW)	-12/06				**CZ122**		Ø 20,64	
	01-				**PZ153**	Valeo	Ø 15,87	Alu
3.5 i V6 4WD Eng.G6CU (147kW)	01-				**PZ153**	Valeo	Ø 15,87	Alu
Tiburon Coupe 10/06-								
2.0 CVVT Eng.G4GC (105kW)	06-				**PF951**	Man	Ø 25,40	Alu, +ABS, -ESP
Trajet (FO) 3/00-12/08								
2.0 Eng.G4GC (103kW)	04-		R	L	**CF816**		Ø 20,64	Alu
	04-		R	R	**CF817**		Ø 20,64	Alu
2.0 16v Eng.G4JP-G (100kW)	00-		R	L	**CF816**		Ø 20,64	Alu
	00-		R	R	**CF817**		Ø 20,64	Alu
2.0 CRDi Eng.D4EA (83kW)	01-		R	L	**CF816**		Ø 20,64	Alu
	01-		R	R	**CF817**		Ø 20,64	Alu
2.7 V6 Eng.G6BA-G (127kW)	00-		R	L	**CF816**		Ø 20,64	Alu
	00-		R	R	**CF817**		Ø 20,64	Alu

		Spare Parts	F/R	L/R	FRITECH ref.		DIMENSIONS mm.	NOTE
Tucson I (JM) 8/04-3/10								
2.0 CRDi Eng.D4EA (100kW)	06-				**CZ130**		Ø 20,64	Alu
2.0 CRDi Eng.D4EA-F/ -V (103kW)	06-				**PF947**	Man	Ø 25,40	Alu, +TC
	06-				**CZ130**		Ø 20,64	Alu
2.0 CRDi, 4WD Eng.D4EA (83kW)	04-				**PF947**	Man	Ø 25,40	Alu, +TC
	04-				**CZ130**		Ø 20,64	Alu
2.0 CRDi, Allrad Eng.D4EA (110kW)	09-				**CZ130**		Ø 20,64	Alu
2.0, 4WD Eng.G4GC (104kW)	04-				**PF947**	Man	Ø 25,40	Alu, +TC
	04-				**CZ130**		Ø 20,64	Alu
2.7 4WD Eng.G6BA (129kW)	04-				**PF947**	Man	Ø 25,40	Alu, +TC

HYUNDAI LCV

Grace Bus 7/93-10/04								
2.5 D Eng.D4BA (55kW)	93-94		R	L	**CF836**		Ø 19,05	Alu
	93-94		R	R	**CF837**		Ø 19,05	Alu
2.5 TD Eng.D4BF (59kW)	98-01		R	L	**CF836**		Ø 19,05	Alu
	98-01		R	R	**CF837**		Ø 19,05	Alu
2.6 D (57kW)	99-04		R	L	**CF836**		Ø 19,05	Alu
	99-04		R	R	**CF837**		Ø 19,05	Alu
H-1 Van, Starex 10/97-								
2.4 Eng.G4JS (107kW)	01-		R	L	**CF847**		Ø 22,20	Alu
	01-		R	R	**CF848**		Ø 22,20	Alu
2.4, 4WD Eng.G4CS (82-84-90kW)	03-		R	L	**CF816**		Ø 20,64	Alu
	97-		R	L	**CF847**		Ø 22,20	Alu
	03-		R	R	**CF817**		Ø 20,64	Alu
	97-		R	R	**CF848**		Ø 22,20	Alu
2.5 CRDi Eng.4G64 (85kW)	11-		R		**CF1004**		Ø 22,20	Alu
2.5 CRDi Eng.D4CB (125kW)	08-		R		**CF1004**		Ø 22,20	Alu
2.5 CRDi Eng.D4CB (81kW)	07-		R		**CF1004**		Ø 22,20	Alu
2.5 CRDi Eng.D4CB (85kW)	08-		R		**CF1004**		Ø 22,20	Alu
2.5 CRDi, 4WD Eng.D4CB (100-103kW)	03-		R	L	**CF816**		Ø 20,64	Alu
	03-		R	L	**CF847**		Ø 22,20	Alu
	03-		R	R	**CF817**		Ø 20,64	Alu
	03-		R	R	**CF848**		Ø 22,20	Alu
2.5 D Eng.D4BB (57kW)	97-		R	L	**CF836**		Ø 19,05	Alu
	97-		R	L	**CF847**		Ø 22,20	Alu
	97-		R	R	**CF837**		Ø 19,05	Alu
	97-		R	R	**CF848**		Ø 22,20	Alu
2.5 TD Eng.D4BF (59kW)	97-		R	L	**CF847**		Ø 22,20	Alu
	97-		R	R	**CF848**		Ø 22,20	Alu
2.5 TD, 4WD Eng.D4BH (73kW)	99-		R	L	**CF847**		Ø 22,20	Alu
	99-		R	R	**CF848**		Ø 22,20	Alu
2.5 TD, 4WD Eng.D4BH (74kW)	03-		R	L	**CF816**		Ø 20,64	Alu
	01-		R	L	**CF847**		Ø 22,20	Alu
	03-		R	R	**CF817**		Ø 20,64	Alu
	01-		R	R	**CF848**		Ø 22,20	Alu
2.6 TDiC Eng.D4BB (63kW)	97-		R	L	**CF847**		Ø 22,20	Alu
	97-		R	R	**CF848**		Ø 22,20	Alu
H100 Bus (P) 7/93-								
2.4 Eng.G4CS (82-84-90kW)	93-00		R	L	**CF712**	Luc	Ø 20,64	Alu
	93-00		R	L	**CF836**		Ø 19,05	Alu
	93-00		R	R	**CF711**	Luc	Ø 20,64	Alu
	93-00		R	R	**CF837**		Ø 19,05	Alu
2.5 D, Van Eng.D4BB/ A (57kW)	94-00		R	L	**CF712**	Luc	Ø 20,64	Alu
	94-00		R	L	**CF836**		Ø 19,05	Alu
	94-00		R	R	**CF711**	Luc	Ø 20,64	Alu
	94-00		R	R	**CF837**		Ø 19,05	Alu
2.5 D, Van Eng.D4BX/ D4BA (55kW)	93-94		R	L	**CF712**	Luc	Ø 20,64	Alu
	93-94		R	L	**CF836**		Ø 19,05	Alu
	93-94		R	R	**CF711**	Luc	Ø 20,64	Alu
	93-94		R	R	**CF837**		Ø 19,05	Alu
2.5 TD Eng.D4BF (59kW)	93-00		R	L	**CF712**	Luc	Ø 20,64	Alu
	93-00		R	L	**CF836**		Ø 19,05	Alu
	93-00		R	R	**CF711**	Luc	Ø 20,64	Alu

HYUNDAI LCV

		Spare Parts	F/R	L/R	FRITECH ref.		DIMENSIONS mm.	NOTE
2.5 TD Eng.D4BF (59kW)	93-00		R	R	**CF837**		Ø 19,05	Alu
Porter 7/94-4/04								
2.5 TD Eng.D4BA (57kW)	94-04		R	L	**CF836**		Ø 19,05	Alu
	94-04		R	R	**CF837**		Ø 19,05	Alu
2.6 TD Eng.D4BB (63kW)	94-04		R	L	**CF836**		Ø 19,05	Alu
	94-04		R	R	**CF837**		Ø 19,05	Alu

IHC TRUCK

AD100 - AD150								
All models	84-89		R	L	**CF949**		Ø 25,40	12Inch Brake
	84-89		R	R	**CF950**		Ø 25,40	12Inch Brake
Scout - Scout II								
All models	62-68		R	L	**CF949**		Ø 25,40	
	62-68		R	R	**CF950**		Ø 25,40	
Serie 90								
All models	63-68		R	L	**CF949**		Ø 25,40	Only Version C900 63-64
	63-68		R	R	**CF950**		Ø 25,40	Only Version C900 63-64
Serie Metro								
CM 75, 80, 85	59-72		R	L	**CF949**		Ø 25,40	
	59-72		R	R	**CF950**		Ø 25,40	

INNOCENTI

Elba (146) 4/86-12/97								
1.3 Eng.146A5.000 (49kW)	91-		R		**CF216**		Ø 19,05	
	91-				**PF023**	Ate	Ø 20,64	
1.4 ie Eng.146C5.000/ 146D5.000 (49kW)	94-96		R		**CF216**		Ø 19,05	
	94-96				**PF023**	Ate	Ø 20,64	
1.5 Eng.149C1.000 (55kW)	92-		R		**CF216**		Ø 19,05	
	92-				**PF023**	Ate	Ø 20,64	
1.6 ie Eng.146C6.000/ 146D6.000 (55kW)	94-96		R		**CF216**		Ø 19,05	
	94-96				**PF023**	Ate	Ø 20,64	
1.7 D Eng.146B2.000 (42kW)	91-		R		**CF216**		Ø 19,05	
	91-				**PF023**	Ate	Ø 20,64	
	91-				**PF187**	Bdx	Ø 20,64	
Mille 1/94-12/98								
1.0	94-		R		**CF004**		Ø 19,05	
1.4 Eng.160A1.048 (52kW)	94-		R		**CF004**		Ø 19,05	
Mini I 1/69-1/77								
1.0 Eng.BLMC99H (32kW)	69-77		F	L	**CF190**		Ø 23,81	Clubman
	69-77		F	R	**CF189**		Ø 23,81	Clubman
			R		**CF262**	Loc	Ø 15,87	Ch -364531
			R		**CF191**	Loc	Ø 19,05	Ch 364532-, Cooper
1.0 Eng.BLMC99H (35kW)	69-77		F	L	**CF190**		Ø 23,81	Clubman
	69-77		F	R	**CF189**		Ø 23,81	Clubman
			R		**CF262**	Loc	Ø 15,87	Ch -364531
			R		**CF191**	Loc	Ø 19,05	Ch 364532-, Cooper
1.0 (39kW)	69-77		F	L	**CF190**		Ø 23,81	Clubman
	69-77		F	R	**CF189**		Ø 23,81	Clubman
			R		**CF262**	Loc	Ø 15,87	Ch -364531
			R		**CF191**	Loc	Ø 19,05	Ch 364532-, Cooper
90-120	74-77		R		**CF341**		Ø 12,70	
	-77		R		**CF002**		Ø 19,05	
Mini II 1/77-10/85								
0.8 (25kW)	69-77		F	L	**CF190**		Ø 23,81	
	69-77		F	R	**CF189**		Ø 23,81	
	69-77		R		**CF191**	Loc	Ø 19,05	
1.0 Eng.BLMC99H (27kW)			R		**CF262**	Loc	Ø 15,87	Ch -364531
			R		**CF191**	Loc	Ø 19,05	Ch 364532-, Cooper / Clubman
1.0 Eng.BLMC99H (32kW)			R		**CF262**	Loc	Ø 15,87	Ch -364531
			R		**CF191**	Loc	Ø 19,05	Ch 364532-, Cooper / Clubman
1.0 Eng.BLMC99H (35kW)			R		**CF262**	Loc	Ø 15,87	Ch -364531
			R		**CF191**	Loc	Ø 19,05	Ch 364532-, Cooper / Clubman
1.0 Eng.CB23 (39kW)			R		**CF262**	Loc	Ø 15,87	Ch -364531
			R		**CF191**	Loc	Ø 19,05	Ch 364532-, Cooper / Clubman

INNOCENTI

		Spare Parts	F/R	L/R	FRITECH ref.		DIMENSIONS mm.	NOTE
1.1 (33-37kW)	67-74		R		**CF348**		Ø 20,32	
1.3 S (44kW)	67-74		R		**CF348**		Ø 20,32	
Mini III 10/85-10/91								
0.8 (25kW)	69-77		F	L	**CF190**		Ø 23,81	
	69-77		F	R	**CF189**		Ø 23,81	
	69-77		R		**CF191**	Loc	Ø 19,05	
1.0 Eng.BLMC99H (27kW)	69-77		F	L	**CF190**		Ø 23,81	
	69-77		F	R	**CF189**		Ø 23,81	
	69-77		R		**CF191**	Loc	Ø 19,05	
1.0 Eng.BLMC99H (32kW)	69-77		F	L	**CF190**		Ø 23,81	
	69-77		F	R	**CF189**		Ø 23,81	
	69-77		R		**CF191**	Loc	Ø 19,05	
1.0 Eng.BLMC99H (35kW)	69-77		F	L	**CF190**		Ø 23,81	
	69-77		F	R	**CF189**		Ø 23,81	
	69-77		R		**CF191**	Loc	Ø 19,05	
1.1 (33-37kW)	67-74		R		**CF348**		Ø 20,32	
1.3 Eng.BLMC99H (47kW)	67-74		R		**CF348**		Ø 20,32	
1.3 S (44kW)	69-71		R		**CF380**		Ø 17,46	
Small 1/87-								
500 (22kW)	87-		R		**CF002**		Ø 19,05	
900 (38kW)	87-		R		**CF002**		Ø 19,05	
Spider								
1.1 S			R		**CF191**	Loc	Ø 19,05	
JM3-JM3S-J4-J4S			R		**CF191**	Loc	Ø 19,05	

ISUZU

Amigo 1/89-								
2.2 16v, 4WD Eng.Y22E (96kW)	98-		R		**CF287**		Ø 22,20	
2.3 8v, AWD	89-93		R		**CF287**		Ø 22,20	
2.6 8v, 4WD Eng.4ZE1 (84kW)	89-94		R		**CF287**		Ø 22,20	
D-Max/Wizard/Frontier 5/02-								
2.5 D 4WD Eng.4JA1-T (74kW)	02-		R		**CF815**		Ø 23,81	Alu
2.5 Ddi, 4WD Eng.4JK1E5S-L (120kW)	12-		R		**CF815**		Ø 23,81	Alu
3.0 DiTD 4WD Eng.4JH1-TC (96kW)	02-		R		**CF815**		Ø 23,81	Alu
Faster 1/81-12/87								
KB20, 21	81-84		R		**CF237**		Ø 25,40	
Gemini I (JT) 1/82-12/90								
1.3	86-88		R		**CF621**		Ø 17,46	
1.5 Eng.4XC1-U (52kW)			R		**CF621**		Ø 17,46	
1.5 D Eng.4EC1 (37kW)			R		**CF621**		Ø 17,46	
Hombre								
All models	96-00		R		**CF762**		Ø 19,05	
Mark I 1/82-12/91								
1.5, T. Eng.4XC1-T (49kW)	85-89		R		**CF621**		Ø 17,46	Exc. Turbo -87
	81-84		R		**CF644**		Ø 20,64	
1.6 16v Eng.4XE1W (98kW)	85-89		R		**CF621**		Ø 17,46	Exc. Turbo -87
	81-84		R		**CF644**		Ø 20,64	
1.8 D, TD Eng.4FB1 (45-54kW)	85-89		R		**CF621**		Ø 17,46	Exc. Turbo -87
	81-84		R		**CF644**		Ø 20,64	
Pick-Up (TFR-TFS)								
1.6 4WD Eng.G161Z (58kW)	84-87		R		**CF287**		Ø 22,20	Exc. Sweden/Finland/Norway
	81-12/83		R		**CF237**		Ø 25,40	
	84-87		R		**CF237**		Ø 25,40	Sweden/Finland/Norway
2.0 Eng.G200Z (57kW)	84-87		R		**CF287**		Ø 22,20	Exc. Sweden/Finland/Norway
	81-12/83		R		**CF237**		Ø 25,40	
	84-87		R		**CF237**		Ø 25,40	Sweden/Finland/Norway
2.2 D Eng.C223 (38kW)	84-87		R		**CF287**		Ø 22,20	Exc. Sweden/Finland/Norway
	81-12/83		R		**CF237**		Ø 25,40	
	84-87		R		**CF237**		Ø 25,40	Sweden/Finland/Norway
2.8 D Eng.4BA1 (55kW)	84-87		R		**CF287**		Ø 22,20	Exc. Sweden/Finland/Norway
	81-12/83		R		**CF237**		Ø 25,40	
	84-87		R		**CF237**		Ø 25,40	Sweden/Finland/Norway

ISUZU

		Spare Parts	F/R	L/R	FRITECH ref.		DIMENSIONS mm.	NOTE
Rodeo 1/88-								
2.2 16v, 4WD Eng.Y22E (96kW)	91-		R		**CF287**		Ø 22,20	
2.6 8V, 4WD Eng.4ZE1/ D1 (85-81kW)	91-		R		**CF287**		Ø 22,20	
Serie KB II 7/04-								
200	7/04-		R		**CF815**		Ø 23,81	Alu, South Africa
240 Eng.C24SE (94kW)	7/04-		R		**CF815**		Ø 23,81	Alu, South Africa
250 Dc Eng.4JA1-T (74kW)	7/04-		R		**CF815**		Ø 23,81	Alu, South Africa
300 TDi 4WD Eng.4JJ1-TC (120kW)	7/04-		R		**CF815**		Ø 23,81	Alu, South Africa
350 Eng.6VE1 (147kW)	7/04-		R		**CF815**		Ø 23,81	Alu, South Africa
Serie TF								
All models	92-		R		**CF626**		Ø 25,40	South Africa
Stylus 1/89-12/93								
1.6 16v Eng.4XE1W (98kW)	91-		R		**CF619**		Ø 15,87	
1.8 16v Eng.4XF1	91-		R		**CF619**		Ø 15,87	
Trooper I (UBS) 1/83-12/91								
2.0 Eng.G200Z (58kW)	84-85		R		**CF287**		Ø 22,20	
	81-83		R		**CF237**		Ø 25,40	
2.2 D 4WD Eng.C223 (39kW)	85-87		R		**CF287**		Ø 22,20	
Trooper I Soft Top (UBS) 1/83-12/91								
2.2 Eng.4ZD1 (66kW)	85-89		R		**CF287**		Ø 22,20	
2.2 TD Eng.C223T (53kW)	85-87		R		**CF287**		Ø 22,20	
WFR 11 - 12 - 53 - 62 1/83-12/89								
1.8 (61kW)	86-91		R		**CF287**		Ø 22,20	
	82-83		R		**CF626**		Ø 25,40	
2.0 Eng.4ZC1 (69kW)	86-8/90		R		**CF287**		Ø 22,20	
	82-83		R		**CF626**		Ø 25,40	
2.2 D Eng.C223 (44kW)	85-8/90		R		**CF287**		Ø 22,20	
	82-83		R		**CF626**		Ø 25,40	

IVECO BUS

A 70.14 Z								
All models Bus			R		**CF536**		Ø 23,81	
Autobus								
308			F		**CF230**		Ø 50,80	
					PF026		Ø 44,45	
					PZ026		Ø 31,75	
309, 220 H			F		**CF475**		Ø 50,80	
					PF026		Ø 44,45	
					PZ008		Ø 31,75	309, 220 H
					PZ026		Ø 31,75	309A
314/1			F/R		**CF476**		Ø 38,10	
314/2 Eng.8060.02 (90kW)			F		**CF477**		Ø 44,45	
					PF026		Ø 44,45	
					CZ002		Ø 31,75	
					PZ008		Ø 31,75	
314/3 Eng.8060.12			F		**CF477**		Ø 44,45	
			R		**CF478**		Ø 50,80	
					PF026		Ø 44,45	
					CZ002		Ø 31,75	
					PZ008		Ø 31,75	
330					**PZ001**		Ø 31,75	
343 Eng.8200.13					**PZ026**		Ø 31,75	
370,.10,.20 Eng.8220.12 (148kW)			F		**CF756**		Ø 50,80	
					PF026		Ø 44,45	
					PZ001		Ø 31,75	
50 AL			F/R		**CF188**		Ø 25,40	
					PF027		Ø 25,40	
					CZ005		Ø 19,05	Alu
					CZ101		Ø 19,05	
					PZ005		Ø 19,05	

	Spare Parts	F/R	L/R	FRITECH ref.		DIMENSIONS mm.	NOTE
100 1/73-							
F13, OM13, EC Eng.8060.02 (90kW)		F		**CF479**		Ø 50,80	
				PF026		Ø 44,45	
				CT003		Ø 25,40	Alu
				CZ005		Ø 19,05	Alu
				CZ101		Ø 19,05	
				PZ005		Ø 19,05	
NC Eng.8060.02 (90kW)		F/R		**CF230**		Ø 50,80	
				PF026		Ø 44,45	
				CZ001		Ø 31,75	
				PZ002		Ø 31,75	
OM Eng.8060.02 (90kW)		R		**CF478**		Ø 50,80	
				PF026		Ø 44,45	
				CZ001		Ø 31,75	
				PZ008		Ø 31,75	
109 1/83-12/91							
109.14 Zeta Eng.8060.04/ .05 (96-99-101kW)		R		**CF482**		Ø 31,75	
85-				**PF137**		Ø 27,00	
				PF135		Ø 31,75	
-85				**PF103**		Ø 38,10	
				CZ007		Ø 19,05	
				PZ005		Ø 19,05	
110 1/73-							
110.14, NC, 130 NC Eng.8060.04 (96-99-101kW)		F		**CF230**		Ø 50,80	
				PF026		Ø 44,45	
				CZ001		Ø 31,75	
				PZ021		Ø 31,75	
NC, OM		F/R		**CF230**		Ø 50,80	
				PF026		Ø 44,45	
				CZ001		Ø 31,75	
				PZ002		Ø 31,75	
115							
115.14 - 115.17 Eng.8060.04/ .24 (96kW)				**CZ006**		Ø 38,10	
				PZ006		Ø 25,40	
120 1/75-							
OM, F13, OM13, F14, OM14 Eng.CP3 (114kW)		F/R		**CF756**		Ø 50,80	
				PF026		Ø 44,45	
				CZ001		Ø 31,75	OM, F13, OM13
				CZ002		Ø 31,75	F14 / OM14
				PZ008		Ø 31,75	OM
				PZ021		Ø 31,75	F13,14 / OM13,14
130 1/74-							
130.20 NC, NR, NT Eng.8220.02		F		**CF230**		Ø 50,80	
				PF026		Ø 44,45	
				CZ002		Ø 31,75	
				PZ021		Ø 31,75	
OM 14 Eng.CP3 (114kW)		F/R		**CF230**		Ø 50,80	
				PF026		Ø 44,45	
				CZ002		Ø 31,75	
				PZ002		Ø 31,75	
135							
135.14 - 135.17 Eng.8060.05 (101kW)				**CZ006**		Ø 38,10	
				PZ006		Ø 25,40	
140 1/75-							
F 14 - OM 14				**CZ002**		Ø 31,75	
				PZ021		Ø 31,75	
F20, OM20		F/R		**CF481**		Ø 57,15	
				PF026		Ø 44,45	
145 1/87-							
145.17 Eng.8060.25 (105-130kW)				**CZ006**		Ø 38,10	
				PZ006		Ø 25,40	

IVECO TRUCK

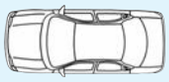		Spare Parts	F/R	L/R	FRITECH ref.		DIMENSIONS mm.	NOTE
150 1/75-								
150.20NC, NR, NT Eng.8220.02			F/R		**CF481**		Ø 57,15	
					PF026		Ø 44,45	
					CZ002		Ø 31,75	
					PZ021		Ø 31,75	
F14, OM14, 150.16A, 150.17 Eng.8060.25 (105-130kW)			F/R		**CF481**		Ø 57,15	
					PF026		Ø 44,45	
					CZ002		Ø 31,75	
					PZ021		Ø 31,75	
159 1/70-								
20 - OM 20					**CZ002**		Ø 31,75	
					PZ021		Ø 31,75	
F 17 - OM 17					**CZ006**		Ø 38,10	
					PZ006		Ø 25,40	
170 1/75-								
170.20 Eng.8220.02					**PZ028**		Ø 25,40	
170.26, NC, NT Eng.8210.02 (192kW)					**PZ028**		Ø 25,40	
170.33, NC Eng.8280.01 (244kW)					**PZ028**		Ø 25,40	
170.35, NC, NT Eng.8280.02 (262kW)					**PZ028**		Ø 25,40	
175								
175.17 Eng.8060.25 (105-130kW)					**CZ006**		Ø 38,10	
					PZ006		Ø 25,40	
180 1/74-								
180.24 Eng.8220.22 (177kW)					**PZ028**		Ø 25,40	
190 1/75-								
190.20F, H, N, NC Eng.8220.02					**PZ028**		Ø 25,40	
190.26, NC, PAC, PAT, PC, PT Eng.8210.02 (192kW)					**PZ028**		Ø 25,40	
190.26H, HT, N, NT, T Eng.8210.02 (192kW)					**PZ028**		Ø 25,40	
190.33, NC Eng.8280.01 (244kW)					**PZ028**		Ø 25,40	
190.35H, HT, NC, NT, PC, PT Eng.8280.02 (262kW)					**PZ028**		Ø 25,40	
220 1/77-								
220.35, T Eng.8280.02 (262kW)					**PZ001**		Ø 31,75	
240 1/69-								
240.26 Eng.8210.02 (192kW)					**PZ001**		Ø 31,75	
240.35 Eng.8280.02 (262kW)					**PZ001**		Ø 31,75	
300 1/74-								
300 PC, PT, TC Eng.8210.02 (192kW)					**PZ001**		Ø 31,75	
40/35 1/66-12/71								
OM 40 - 40/35 NC Eng.8040.02 (60kW)			F		**CF169**		Ø 26,98	
			R		**CF170**		Ø 22,22	
					PF028		Ø 25,40	
					PF126		Ø 25,40	
					CZ004		Ø 19,05	Alu
					CZ100		Ø 19,05	
					PZ009		Ø 19,05	Alu
50 1/66-12/86								
50 - NC/ F8, 0M8 Eng.8040.02 (60kW)					**CZ004**		Ø 19,05	Alu
					CZ100		Ø 19,05	
					CZ005		Ø 19,05	Alu
					CZ101		Ø 19,05	
					CZ007		Ø 19,05	
					PZ005		Ø 19,05	
50.10 Zeta Eng.8340.04 (73-74kW)			F		**CF169**	Per	Ø 26,98	
			F		**CF188**	Sirmac	Ø 25,40	
			R		**CF217**		Ø 23,81	
					PF027		Ø 25,40	
50.8 Zeta Eng.8040.04 (63kW)			F		**CF169**	Per	Ø 26,98	
			F		**CF188**	Sirmac	Ø 25,40	
			R		**CF217**		Ø 23,81	
					PF027		Ø 25,40	
50.9 Zeta Eng.8040.05 (65kW)			F		**CF169**	Per	Ø 26,98	
			R		**CF217**		Ø 23,81	

	Spare Parts	F/R	L/R	FRITECH ref.		DIMENSIONS mm.	NOTE
NC, OM Eng.8040.02 (60kW)		F		**CF169**		Ø 26,98	
		R		**CF170**		Ø 22,22	
				PF027		Ø 25,40	
				PF125		Ø 25,40	
				CT003		Ø 25,40	Alu
				CZ005		Ø 19,05	Alu
				CZ101		Ø 19,05	
				CZ007		Ø 19,05	
				PZ005		Ø 19,05	
55 1/70-							
55NC Eng.8040.02 (60kW)		F		**CF169**		Ø 26,98	
		R		**CF170**		Ø 22,22	
				PF027		Ø 25,40	
				PF125		Ø 25,40	
				CT003		Ø 25,40	Alu
				PZ005		Ø 19,05	
F8, F9, F10, OM8, 9, 10		F		**CF169**		Ø 26,98	
		R		**CF217**		Ø 23,81	
				PF027		Ø 25,40	
				PF125		Ø 25,40	
				CT003		Ø 25,40	Alu
				CZ004		Ø 19,05	Alu, F8 / OM8
				CZ100		Ø 19,05	F8 / OM8
				CZ005		Ø 19,05	Alu, F9,10 / OM9,10
				CZ101		Ø 19,05	F9,10 / OM9,10
				PZ005		Ø 19,05	
60 1/79-12/91							
60.10 Zeta Eng.8340.04 (73-74kW) 10/83-		F		**CF188**		Ø 25,40	
10/83-		R		**CF217**		Ø 23,81	
10/83-				**PF027**		Ø 25,40	
				CZ007		Ø 19,05	
				PZ005		Ø 19,05	
60.11 Zeta Eng.8040.25B/ X (75-85kW) 87-		F/R		**CF188**		Ø 25,40	
87-				**PF125**		Ø 25,40	
				CZ007		Ø 19,05	
				PZ005		Ø 19,05	
60.8 Zeta Eng.8040.04 (63kW) 10/83-		F		**CF188**		Ø 25,40	
10/83-		R		**CF217**		Ø 23,81	
10/83-				**PF027**		Ø 25,40	
				CZ007		Ø 19,05	
				PZ005		Ø 19,05	
F8, F10, OM8, OM10		F		**CF169**		Ø 26,98	
		R		**CF217**		Ø 23,81	
				PF027		Ø 25,40	
				PF125		Ø 25,40	
				CT003		Ø 25,40	Alu
				CZ005		Ø 19,05	Alu
				CZ101		Ø 19,05	
				PZ005		Ø 19,05	
615 1/51-12/58							
N1 Truck Eng.305D		F/R		**CF187**		Ø 28,57	
616 1/65-12/71							
616N, N1, NM Eng.230A.000		F/R		**CF187**		Ø 28,57	
				CZ005		Ø 19,05	Alu
				CZ101		Ø 19,05	
616N2 Eng.803A(8030.01) (33kW)		F/R		**CF187**		Ø 28,57	
				PF101		Ø 31,75	Vett -04822
				PF100		Ø 31,75	Vett 104823-
				PF102		Ø 31,75	
				CZ004		Ø 19,05	Alu
				CZ100		Ø 19,05	
				PZ010		Ø 19,05	Alu
				PZ111		Ø 19,05	

IVECO TRUCK

	Spare Parts	F/R	L/R	FRITECH ref.		DIMENSIONS mm.	NOTE
616N3 Eng.8030.02 (46kW)		F/R		**CF187**		Ø 28,57	
				PF101		Ø 31,75	Vett -04822
				PF100		Ø 31,75	Vett 104823-
				PF102		Ø 31,75	
				CZ004		Ø 19,05	Alu
				CZ100		Ø 19,05	
				PZ010		Ø 19,05	Alu
				PZ111		Ø 19,05	
616N4 Eng.803A(8040.01) (60kW)		F/R		**CF187**		Ø 28,57	
				PF101		Ø 31,75	Vett -04822
				PF100		Ø 31,75	Vett 104823-
				PF102		Ø 31,75	
				CZ004		Ø 19,05	Alu
				CZ100		Ø 19,05	
				PZ010		Ø 19,05	Alu
				PZ111		Ø 19,05	
619 1/70-							
N1, N1P, T1, T1P Eng.8210.02 (192kW)				**PZ001**		Ø 31,75	
625 1/71-							
N - N1 Eng.230A.000		F		**CF331**		Ø 31,75	
		R		**CF187**		Ø 28,57	
				PF101		Ø 31,75	
				CZ005		Ø 19,05	Alu
				CZ101		Ø 19,05	
				CZ001		Ø 31,75	
				PZ027		Ø 19,05	
				PZ008		Ø 31,75	
N2, N2P Eng.804A		F		**CF331**		Ø 31,75	
		R		**CF187**		Ø 28,57	
				CZ004		Ø 19,05	Alu
				CZ100		Ø 19,05	
				CZ001		Ø 31,75	
				PZ027		Ø 19,05	
				PZ008		Ø 31,75	
N3 Eng.8040.02 (60kW)		F		**CF188**		Ø 25,40	
		R		**CF332**		Ø 19,05	
				PF099		Ø 25,40	
				CZ004		Ø 19,05	Alu
				CZ100		Ø 19,05	
				CZ001		Ø 31,75	
				PZ027		Ø 19,05	
				PZ008		Ø 31,75	
643 1/63-12/71							
N2, N3 T		F		**CF475**		Ø 50,80	
				PF026		Ø 44,45	
645 1/60-12/73							
N1 Eng.806A (81kW)		F/R		**CF476**		Ø 38,10	
				PF026		Ø 44,45	
N2 Eng.806A (81kW)		F		**CF477**		Ø 44,45	
				PF026		Ø 44,45	
N3 Eng.8060.02 (90kW)		F		**CF477**		Ø 44,45	
				PF026		Ø 44,45	
65 1/70-12/91							
65.10NC Eng.8040.02 (60kW)		F/R		**CF188**		Ø 25,40	
				PF027		Ø 25,40	
				CT003		Ø 25,40	Alu
83-				**CZ007**		Ø 19,05	
-83				**CZ005**		Ø 19,05	Alu
-83				**CZ101**		Ø 19,05	
-83 / 83-				**PZ005**		Ø 19,05	
65.12 Zeta Eng.8040.25B/ X (75-85kW) 11/85-		R		**CF217**		Ø 23,81	
11/85-				**PF027**		Ø 25,40	
87-				**CZ007**		Ø 19,05	
87-				**PZ005**		Ø 19,05	

	Spare Parts	F/R	L/R	FRITECH ref.		DIMENSIONS mm.	NOTE
65.9 Zeta Eng.8040.05 (65kW) 83-				**CZ007**		Ø 19,05	
83-				**PZ005**		Ø 19,05	
650 1/60-12/73							
N, E Eng.213.000 (66kW)		F/R		**CF476**		Ø 38,10	
				CZ001		Ø 31,75	N, N1, N2, N3
				PZ011		Ø 19,05	E
				PZ008		Ø 31,75	N, N1, N2, N3
N1 Eng.8060.01(806A) (81kW)		F/R		**CF476**		Ø 38,10	
				PF026		Ø 44,45	
				CZ001		Ø 31,75	
				PZ008		Ø 31,75	
N2 Eng.8060.01(806A) (81kW)		F		**CF477**		Ø 44,45	
				PF026		Ø 44,45	
				CZ001		Ø 31,75	
				PZ008		Ø 31,75	
653							
N - N1 - N2 - N3				**CZ001**		Ø 31,75	
				PZ008		Ø 31,75	
655 1/66-12/71							
N Eng.8060.01(806A) (81kW)		F		**CF477**		Ø 44,45	
				PF026		Ø 44,45	
				CZ001		Ø 31,75	
				PZ008		Ø 31,75	
N, N1 Eng.8060.02 (90kW)		F		**CF477**		Ø 44,45	
				PF026		Ø 44,45	
				CZ001		Ø 31,75	
				PZ008		Ø 31,75	
662 1/60-12/71							
N Eng.213.000 (66kW)		F/R		**CF476**		Ø 38,10	
				PF026		Ø 44,45	
				CZ001		Ø 31,75	
				PZ011		Ø 19,05	
N1 Eng.8060.01(806A) (81kW)				**PF026**		Ø 44,45	
				CZ001		Ø 31,75	
				PZ008		Ø 31,75	
N2 Eng.8060.01(806A) (81kW)		F/R		**CF478**		Ø 50,80	
				PF026		Ø 44,45	
				CZ001		Ø 31,75	
				PZ008		Ø 31,75	
N2, N3 T Eng.8060.02 (90kW)		F/R		**CF478**		Ø 50,80	
				PF026		Ø 44,45	
				CZ001		Ø 31,75	
				PZ008		Ø 31,75	
672 1/69-							
N Eng.8060.02 (90kW)		F/R		**CF478**		Ø 50,80	
				PF026		Ø 44,45	
				CZ002		Ø 31,75	
				PZ002		Ø 31,75	
673 1/69-							
N,NR,T Eng.CP3 (114kW)		F/R		**CF478**		Ø 50,80	
				PF026		Ø 44,45	
				CZ002		Ø 31,75	
				PZ002		Ø 31,75	
684 1/70-							
N, NP Eng.8200.02 (147kW)				**PZ001**		Ø 31,75	
691 1/69-							
N, T, TS Eng.8210.02 (192kW)				**PZ001**		Ø 31,75	
697 1/70-							
N, NP, NT, T, TP Eng.8210.02 (192kW)				**PZ001**		Ø 31,75	
70 1/70-12/92							
70.10, NC Eng.8040.02 (60kW)		F/R		**CF188**		Ø 25,40	
				PF027		Ø 25,40	
				CT003		Ø 25,40	Alu
-83				**CZ005**		Ø 19,05	Alu

IVECO TRUCK

		Spare Parts	F/R	L/R	FRITECH ref.		DIMENSIONS mm.	NOTE
70.10, NC Eng.8040.02 (60kW)	-83				**CZ101**		Ø 19,05	
	-83				**PZ005**		Ø 19,05	
70.12 Zeta Eng.8340.05 (84kW)					**CZ005**		Ø 19,05	Alu
					CZ101		Ø 19,05	
					PZ005		Ø 19,05	
70.14 Zeta Eng.8060.05 (101kW)					**CZ005**		Ø 19,05	Alu
					CZ101		Ø 19,05	
					PZ005		Ø 19,05	
F10 - OM 10	-83				**CZ005**		Ø 19,05	Alu
	-83				**CZ101**		Ø 19,05	
	-83				**PZ005**		Ø 19,05	
75 1/70-								
75.10	-83				**CZ005**		Ø 19,05	Alu
	-83				**CZ101**		Ø 19,05	
	-83				**PZ005**		Ø 19,05	
75.14 ACL90 W ME.I Eng.8060.05.200 (101kW)			R		**CF558**		Ø 48,00	
	-83				**CZ005**		Ø 19,05	Alu
	-83				**CZ101**		Ø 19,05	
	-83				**PZ005**		Ø 19,05	
F10, OM10, NC Eng.8040.02 (60kW)			F/R		**CF188**		Ø 25,40	
					PF027		Ø 25,40	
					CT003		Ø 25,40	Alu
	-83				**CZ005**		Ø 19,05	Alu
	-83				**CZ101**		Ø 19,05	
	-83				**PZ005**		Ø 19,05	
PC, PM Eng.8060.02 (90kW)			F		**CF534**		Ø 44,45	
			R		**CF535**		Ø 31,75	
					PF026		Ø 44,45	
79 1/83-12/91								
79.10 Zeta Eng.8340.04 (73-74kW)	83-		F/R		**CF231**		Ø 26,98	
	83-				**CT003**		Ø 25,40	Alu
					CZ007		Ø 19,05	
					PZ005		Ø 19,05	
79.12 T. Zeta Eng.8060.25B/ X (75-85kW)	83-		F/R		**CF231**		Ø 26,98	
	83-				**CT003**		Ø 25,40	Alu
					CZ007		Ø 19,05	
					PZ005		Ø 19,05	
79.14, 79.13 Zeta Eng.8040.04/ .05 (96-99-101kW)			F/R		**CF231**		Ø 26,98	
	11/85-				**PF137**		Ø 27,00	
	11/85-				**PF136**		Ø 28,57	
	-85				**PF103**		Ø 38,10	
	-85				**CT003**		Ø 25,40	Alu
	83-				**CZ007**		Ø 19,05	Turbo
					CZ005		Ø 19,05	Alu
					CZ101		Ø 19,05	
					PZ005		Ø 19,05	
F10, F13, OM10, OM13			F/R		**CF231**		Ø 26,98	
					PF027		Ø 25,40	
					CT003		Ø 25,40	Alu
					CZ005		Ø 19,05	Alu
					CZ101		Ø 19,05	
					PZ005		Ø 19,05	
80 1/70-								
80 NC Eng.8060.02 (90kW)	70-		R		**CF293**		Ø 31,75	
					PF026		Ø 44,45	
					CT003		Ø 25,40	Alu
					CZ014		Ø 31,75	
80 OM	70-		R		**CF293**		Ø 31,75	
					PF026		Ø 44,45	
					CT003		Ø 25,40	Alu
					CZ015		Ø 19,05	
					PZ005		Ø 19,05	
80.14 Eng.8060.05.200 (101kW)			F		**CF534**		Ø 44,45	
			R		**CF535**		Ø 31,75	

	Spare Parts	F/R	L/R	FRITECH ref.		DIMENSIONS mm.	NOTE
80.14 Eng.8060.05.200 (101kW)				**PF026**		Ø 44,45	
				CZ001		Ø 31,75	
				PZ001		Ø 31,75	
80.16 Eng.8060.24 (124kW)		F		**CF534**		Ø 44,45	
		R		**CF559**		Ø 38,10	
				PF026		Ø 44,45	
				CZ001		Ø 31,75	
				PZ001		Ø 31,75	
NR, OM F13, OM13 70-		R		**CF293**		Ø 31,75	
				PF026		Ø 44,45	
				CT003		Ø 25,40	Alu
90 1/70-							
90.17 VM				**CZ094**		Ø 19,05	Military Vehicle
NC, OM, F13, OM13 Eng.8060.04 (96-99-101kW)				**PF026**		Ø 44,45	
				CT003		Ø 25,40	Alu
				CZ005		Ø 19,05	Alu, F13, OM13
				CZ101		Ø 19,05	F13, OM13
				CZ015		Ø 19,05	OM
				CZ014		Ø 31,75	NC
				PZ005		Ø 19,05	OM, F13, OM13
PC, PM, NC Eng.8060.02 (90kW)				**PF026**		Ø 44,45	
95 1/83-12/91							
95.14 Zeta Eng.8060.04 (96-99-101kW)		R		**CF528**		Ø 28,60	
				PF137		Ø 27,00	
85-				**PF136**		Ø 28,57	
-85				**PF103**		Ø 38,10	
-85				**CT003**		Ø 25,40	Alu
				CZ007		Ø 19,05	
				PZ005		Ø 19,05	
A 55.10							
All models		R		**CF536**		Ø 23,81	
Cerbiatto							
- Eng.C03D/ 20		F		**CF188**		Ø 25,40	
		R		**CF170**		Ø 22,22	
				PF027		Ø 25,40	
				CZ005		Ø 19,05	Alu
				CZ101		Ø 19,05	
				PZ007		Ø 19,05	
Daily - Grinta 1/79-12/90							
28 F 79-		R		**CF209**		Ø 15,87	
79-				**PF144**	Loc	Ø 22,20	
79-				**CT003**		Ø 25,40	Alu
28.8 79-		R		**CF209**		Ø 15,87	
79-				**PF144**	Loc	Ø 22,20	
79-				**CT003**		Ø 25,40	Alu
30 F 79-		R		**CF209**		Ø 15,87	
79-				**PF144**	Loc	Ø 22,20	
79-				**CT003**		Ø 25,40	Alu
30.8 Eng.8140.61 (53kW) 79-		R		**CF209**		Ø 15,87	
79-				**PF144**	Loc	Ø 22,20	
79-				**CT003**		Ø 25,40	Alu
32 F 79-		R		**CF209**		Ø 15,87	
79-				**PF144**	Loc	Ø 22,20	
79-				**CT003**		Ø 25,40	Alu
32.8 Eng.8140.61 (53kW) 79-		R		**CF209**		Ø 15,87	
79-				**PF144**	Loc	Ø 22,20	
79-				**CT003**		Ø 25,40	Alu
35.10 Eng.8140.21 (68kW) 82-		R		**CF163**		Ø 17,46	
82-				**PF025**	Bdx	Ø 20,64	
82-				**CT003**		Ø 25,40	Alu
35.10 T. Eng.8140.21 (68kW) 82-		R		**CF208**		Ø 19,05	
82-				**PF025**	Bdx	Ø 20,64	
82-				**CT001**	Benditalia	Ø 25,40	Alu

IVECO TRUCK

		Spare Parts	F/R	L/R	FRITECH ref.		DIMENSIONS mm.	NOTE
35.12 T. Eng.8140.61 (53kW)	82-		R		**CF208**		Ø 19,05	
	82-				**PF025**	Bdx	Ø 20,64	
	82-				**CT001**	Benditalia	Ø 25,40	Alu
35.8 Eng.8140.61 (53kW)	79-		R		**CF209**		Ø 15,87	
	82-		R		**CF163**		Ø 17,46	
	82-				**PF025**	Bdx	Ø 20,64	
	79-				**PF144**	Loc	Ø 22,20	
	79-				**CT003**		Ø 25,40	Alu
40.10 Eng.8140.21 (68kW)	82-		R		**CF163**		Ø 17,46	
	82-				**PF025**	Bdx	Ø 20,64	
	82-				**CT003**		Ø 25,40	Alu
40.10 T. Eng.8140.21 (68kW)	82-		R		**CF208**		Ø 19,05	
	82-				**PF025**	Bdx	Ø 20,64	
	82-				**CT001**	Benditalia	Ø 25,40	Alu
40.12	82-		R		**CF163**		Ø 17,46	
	82-				**PF025**	Bdx	Ø 20,64	
	82-				**CT003**		Ø 25,40	Alu
40.8 Eng.8140.61 (53kW)	82-		R		**CF163**		Ø 17,46	
	82-				**PF025**	Bdx	Ø 20,64	
	82-				**CT003**		Ø 25,40	Alu
45.10 Eng.8140.21 (68kW)	82-		R		**CF232**		Ø 20,64	
	82-				**PF029**		Ø 25,40	
	82-				**CT001**	Benditalia	Ø 25,40	Alu
49.10 T. Eng.8140.21 (68kW)	82-		R		**CF232**		Ø 20,64	
	82-				**PF029**		Ø 25,40	
	82-				**CT001**	Benditalia	Ø 25,40	Alu
49.12			R		**CF232**		Ø 20,64	
Daily I 1/91-1/99								
30.8 Eng.8140.61 (53kW)	91-99		R		**CF209**		Ø 15,87	
	91-99				**PF144**	Loc	Ø 22,20	
35.10 Eng.8140.21 (68kW)	91-96		R		**CF208**		Ø 19,05	
	96-99				**PF204**		Ø 25,40	
	96-99				**PF465**		Ø 26,99	Supplied -Servo
35.10 Eng.8140.47R (76kW)	-96		R		**CF163**		Ø 17,46	
35.12 Eng.8140.47 (85kW)	90-96		R		**CF208**		Ø 19,05	
35.12 V, C Eng.8140.61 (53kW)	91-96		R		**CF208**		Ø 19,05	
	96-99				**PF204**		Ø 25,40	
	96-99				**PF465**		Ø 26,99	Supplied -Servo
35.8 Eng.8140.61 (53kW)	96-99				**PF204**		Ø 25,40	
40.10 Eng.8140.21 (68kW)	91-99		R		**CF163**		Ø 17,46	
	91-99				**PF025**	Bdx	Ø 20,64	
40.10 Eng.8140.27 (76kW)	89-96				**PF029**		Ø 25,40	Special Vehicle
40.8 Eng.8140.61 (53kW)	91-99		R		**CF163**		Ø 17,46	
	91-99				**PF025**	Bdx	Ø 20,64	
45.10 TD Eng.8140.21 (68kW)	91-99		R		**CF232**		Ø 20,64	
	96-99				**PF465**		Ø 26,99	Supplied -Servo
45.12 TD Eng.8140.47 (85kW)	91-99		R		**CF209**		Ø 15,87	
	91-99		R		**CF163**		Ø 17,46	
	96-99				**PF465**		Ø 26,99	Supplied -Servo
49.10 TD Eng.8140.21 (68kW)	91-99		R		**CF232**		Ø 20,64	
	96-99				**PF465**		Ø 26,99	Supplied -Servo
49.12 TD Eng.8140.21 (68kW)	91-99		R		**CF232**		Ø 20,64	
	96-99				**PF465**		Ø 26,99	Supplied -Servo
59.12 TD Eng.8140.21/ .47 (85kW)	91-96		R		**CF310**		Ø 23,81	
	91-96				**PF238**		Ø 28,60	Supplied -Servo
Daily II 2/99-4/06								
35C11V 2.8 D Eng.8140.43C/ B (78kW)	99-				**PF204**		Ø 25,40	
35C12 2.3JTD Eng.F1AE0481B (85kW)	02-06				**PF204**		Ø 25,40	
35C13V 2.8 D Eng.8140.43S (92-94kW)	99-				**PF204**		Ø 25,40	
35C15V Eng.8140.43N (107kW)	99-				**PF204**		Ø 25,40	
35C9 2.8 D Eng.8140.63 (62kW)	99-				**PF204**		Ø 25,40	
35S11 2.8 D Eng.8140.43C (78kW)	99-				**PF538**		Ø 23,81	
35S13 2.8 D Eng.8140.43S (92kW)	99-				**PF538**		Ø 23,81	

		Spare Parts	F/R	L/R	FRITECH ref.		DIMENSIONS mm.	NOTE
35S15 2.8 D Eng.8140.43N (107kW)	99-				**PF538**		Ø 23,81	
35S9 2.8 D Eng.8140.63 (62kW)	99-				**PF538**		Ø 23,81	
50C11 2.8 D Eng.8140.43C/ B (78kW)	99-				**PF204**		Ø 25,40	
50C13 2.8 D Eng.8140.43S (92-94kW)	99-				**PF204**		Ø 25,40	
65C15 2.8 TD Eng.8140.43N (107-90kW)	99-				**PF511**		Ø 28,60	Supplied -Servo
Daily III 5/06-12/10								
2.3 HPI Eng.F1AE0481FA (71kW)	06-				**PF204**		Ø 25,40	
2.3 HPI Eng.F1AE0481FA (78kW)	09-				**PF204**		Ø 25,40	
2.3 HPI Eng.F1AE0481GA (85kW)	06-				**PF204**		Ø 25,40	
2.3 HPI Eng.F1AE0481GA (93kW)	09-				**PF204**		Ø 25,40	
2.3 HPI Eng.F1AE0481HA (100kW)	06-				**PF204**		Ø 25,40	
3.0 HPI Eng.F1CE0441A (100kW)	09-12/11				**PF984**		Ø 31,75	Alu
	09-12/11				**PF985**		Ø 31,75	Alu
3.0 HPI Eng.F1CE0481FA (108kW)	06-				**PF204**		Ø 25,40	
	06-12/11				**PF984**		Ø 31,75	Alu
	06-12/11				**PF985**		Ø 31,75	Alu
3.0 HPI Eng.F1CE0481HA (130kW)	06-				**PF204**		Ø 25,40	
	06-12/11				**PF984**		Ø 31,75	Alu
	06-12/11				**PF985**		Ø 31,75	Alu
3.0 HPT Eng.F1CE0481HC (130kW)	07-				**PF204**		Ø 25,40	
3.0 Nat. Power Eng.F1CE0441A (100kW)	09-				**PF204**		Ø 25,40	
3.0 TT Eng.F1CE0481HA (125kW)	10-				**PF204**		Ø 25,40	
	10-12/11				**PF984**		Ø 31,75	Alu
	10-12/11				**PF985**		Ø 31,75	Alu
3.0 TT Eng.F1CE3481LC (103kW)	10-				**PF204**		Ø 25,40	
	10-12/11				**PF984**		Ø 31,75	Alu
	10-12/11				**PF985**		Ø 31,75	Alu
Daily IV 1/11-2/14								
2.3 HPI Eng.F1AE3481A (78kW)	11-				**PF986**		Ø 25,40	Alu
2.3 HPI Eng.F1AE3481B (93kW)	11-				**PF986**		Ø 25,40	Alu
3.0 HPI Eng.F1CE3481J/ F1CE3481L (107kW)	11-				**PF984**		Ø 31,75	Alu
	11-				**PF985**		Ø 31,75	Alu
3.0 HPT Eng.F1CE3481C/ F1CE3481K (125kW)	11-				**PF984**		Ø 31,75	Alu
	11-				**PF985**		Ø 31,75	Alu
3.0 HPT Eng.F1CE3481D (150kW)	11-				**PF984**		Ø 31,75	Alu
	11-				**PF985**		Ø 31,75	Alu
Daino								
40, 45 Eng.C03 70/ 100			F/R		**CF188**		Ø 25,40	
					PF027		Ø 25,40	
					CZ005		Ø 19,05	Alu
					CZ101		Ø 19,05	
					PZ007		Ø 19,05	
EuroCargo 1/91-12/11								
100 E 15 Eng.8060.25R (105-130kW)					**PF135**		Ø 31,75	
100 E 15 Eng.8060.45R (105-130kW)					**PF135**		Ø 31,75	
100 E 17 Eng.F4AE0481A (125kW)	00-				**PF135**		Ø 31,75	
100 E 18 Eng.8060.25V (130kW)					**PF135**		Ø 31,75	
100 E 18 Eng.F4AE0681E (134kW)	00-				**PF135**		Ø 31,75	
100 E 21 Eng.8060.45 (152-105kW)					**PF135**		Ø 31,75	
100 E 21 Eng.F4AE0681D (154kW)	00-				**PF135**		Ø 31,75	
120 E 18 Eng.F4AE0681E (134kW)	00-				**PF135**		Ø 31,75	
120 E 24 Eng.F4AE0681B (176kW)	00-				**PF135**		Ø 31,75	
120 E 28 Eng.F4AE0681A (202kW)	00-				**PF135**		Ø 31,75	
120 EL 17 Eng.F4AE0481A (125kW)	00-				**PF135**		Ø 31,75	
120 EL 21 Eng.F4AE0681D (154kW)	00-				**PF135**		Ø 31,75	
130 E 18 Eng.F4AE0681E (134kW)	00-				**PF135**		Ø 31,75	
130 E 24 Eng.F4AE0681B (176kW)	00-				**PF135**		Ø 31,75	
130 E 28 Eng.F4AE0681A (202kW)	00-				**PF135**		Ø 31,75	
140 E 18 Eng.F4AE0681E (134kW)	00-				**PF135**		Ø 31,75	
140 E 24 Eng.F4AE0681B (176kW)	00-				**PF135**		Ø 31,75	
150 E 15 Eng.8060.25R (105-130kW)					**PF140**		Ø 33,34	
150 E 18 Eng.8060.25V (105-130kW)					**PF140**		Ø 33,34	
150 E 18 Eng.F4AE0681E (134kW)	00-				**PF135**		Ø 31,75	
					PF140		Ø 33,34	

IVECO TRUCK

		Spare Parts	F/R	L/R	FRITECH ref.		DIMENSIONS mm.	NOTE
150 E 23 Eng.8060.45S/ .6090 (167kW)					**PF140**		Ø 33,34	
150 E 24 Eng.F4AE0681B (176kW)	00-				**PF135**		Ø 31,75	
150 E 27 Eng.8360.46/ R (196-176kW)					**PF140**		Ø 33,34	
150 E 28 Eng.F4AE0681A (202kW)	00-				**PF135**		Ø 31,75	
180 E 21 Eng.8060.45 (152-105kW)					**PF135**		Ø 31,75	
180 E 21 Eng.F4AE0681D (154kW)	00-				**PF135**		Ø 31,75	
180 E 24 Eng.F4AE0681B (176kW)	00-				**PF135**		Ø 31,75	
180 E 28 Eng.F4AE0681A (202kW)	00-				**PF135**		Ø 31,75	
320 E 28 Eng.F4AE0681A (202kW)	00-				**PF135**		Ø 31,75	
60 E 10 Eng.8040.25B/ X (75-85kW)					**PF140**		Ø 33,34	
60 E 12 Eng.8040.25B/ X (75-85kW)					**PF140**		Ø 33,34	
60 E 14 Eng.8040.45 (100kW)	91-				**PF140**		Ø 33,34	
	91-				**PZ120**		Ø 25,40	Turkye
65 E 13 Eng.F4AE0481D (95kW)	00-				**PF135**		Ø 31,75	
65 E 15 Eng.F4AE0481C (110kW)	00-				**PF135**		Ø 31,75	
75 E 12 Eng.8040.25B/ X (75-85kW)					**PF135**		Ø 31,75	
75 E 13 Eng.F4AE0481D (95kW)	00-				**PF135**		Ø 31,75	
75 E 14 Eng.8040.45 (100kW)	91-				**PF135**		Ø 31,75	
	91-				**PZ120**		Ø 25,40	Turkye
75 E 15 Eng.8060.25R (105-130kW)					**PF135**		Ø 31,75	
75 E 15 Eng.F4AE0481C (110kW)	00-				**PF135**		Ø 31,75	
75 E 17 Eng.F4AE0481A (125kW)	00-				**PF135**		Ø 31,75	
75 E 18 Eng.F4AE0681E (134kW)	00-				**PF135**		Ø 31,75	
80 E 15 Eng.8060.25R (105-130kW)					**PF135**		Ø 31,75	
	91-				**CT013**	Bch	Ø 25,40/14,28	
					CZ012		Ø 38,10	
					PZ019		Ø 25,40	
80 E 17 Eng.F4AE0481A (125kW)	00-				**PF135**		Ø 31,75	
80 E 18 Eng.8060.25V (105-130kW)					**PF135**		Ø 31,75	
	91-				**CT013**	Bch	Ø 25,40/14,28	
					CZ012		Ø 38,10	
					PZ019		Ø 25,40	
80 E 18 Eng.F4AE0681E (134kW)	00-				**PF135**		Ø 31,75	
	91-				**CT013**	Bch	Ø 25,40/14,28	
					CZ012		Ø 38,10	
					PZ019		Ø 25,40	
80 E 21 Eng.8060.45 (105-152kW)					**PF135**		Ø 31,75	
	91-				**CT013**	Bch	Ø 25,40/14,28	
					CZ012		Ø 38,10	
					PZ019		Ø 25,40	
80 E 21 Eng.F4AE0681D (154kW)	00-				**PF135**		Ø 31,75	
	91-				**CT013**	Bch	Ø 25,40/14,28	
					CZ012		Ø 38,10	
					PZ019		Ø 25,40	
80 EL 15 Eng.F4AE0481C (110kW)	00-				**PF135**		Ø 31,75	
	91-				**CT013**	Bch	Ø 25,40/14,28	
					CZ012		Ø 38,10	
					PZ019		Ø 25,40	
90 E 17 Eng.F4AE0481A (125kW)	00-				**PF135**		Ø 31,75	
90 E 18 Eng.F4AE0681E (134kW)	00-				**PF135**		Ø 31,75	
90 E 21 Eng.F4AE0681D (154kW)	00-				**PF135**		Ø 31,75	
95 E 15 Eng.8060.25R (105-152kW)					**PF135**		Ø 31,75	
95 E 15 Eng.8060.45R (105-152kW)					**PF135**		Ø 31,75	
95 E 21 Eng.8060.45 (105-152kW)					**PF135**		Ø 31,75	
EuroStar 1/93-12/02								
LD 190 E 38 Eng.8460.41L (221-234-254-276kW)	93-02				**PZ147**	Fte	Ø 31,75	Ch 4220068-, Alu, +Cruise control
LD 190 E 39 Eng.F3AE0681E (287kW)	99-02				**PZ147**	Fte	Ø 31,75	Ch 4220068-, Alu, +Cruise control
LD 190 E 42 Eng.8210.42/ K/ L (243-265-272-277-309kW)	-02				**PZ093**	Fte	Ø 31,75	Ch 4220068-, -Cruise control
LD 190 E 43 Eng.F3AE0681D (316kW)	99-02				**PZ147**	Fte	Ø 31,75	Ch 4220068-, Alu, +Cruise control
LD 190 E 47 Eng.8210.42M (345kW)	93-02				**PZ147**	Fte	Ø 31,75	Ch 4220068-, Alu, +Cruise control
LD 190 E 52 Eng.8280.42S (378kW)	-02				**PZ093**	Fte	Ø 31,75	Ch 4220068-, -Cruise control
	93-02				**PZ147**	Fte	Ø 31,75	Ch 4220068-, Alu, +Cruise control

		Spare Parts	F/R	L/R	FRITECH ref.		DIMENSIONS mm.	NOTE
LD 240 E 42 Eng.8210.42/ K/ L (243-265-272-277-309kW)	-02				**PZ093**	Fte	Ø 31,75	Ch 4220068-, -Cruise control
LD 240 E 47 Eng.8210.42M (345kW)	93-02				**PZ147**	Fte	Ø 31,75	Ch 4220068-, Alu, +Cruise control
LD 240 E 52 Eng.8280.42S (378kW)	-02				**PZ093**	Fte	Ø 31,75	Ch 4220068-, -Cruise control
	93-02				**PZ147**	Fte	Ø 31,75	Ch 4220068-, Alu, +Cruise control
LD 260 E 38 Eng.8460.41L (221-234-254-276kW)	93-02				**PZ147**	Fte	Ø 31,75	Ch 4220068-, Alu, +Cruise control
LD 260 E 39 Eng.F3AE0681E (287kW)	93-02				**PZ147**	Fte	Ø 31,75	Ch 4220068-, Alu, +Cruise control
LD 260 E 42 Eng.8210.42/ K/ L (243-265-272-277-309kW)	-02				**PZ093**	Fte	Ø 31,75	Ch 4220068-, -Cruise control
LD 260 E 43 Eng.F3AE0681D (316kW)	93-02				**PZ147**	Fte	Ø 31,75	Ch 4220068-, Alu, +Cruise control
LD 260 E 47 Eng.8210.42M (345kW)	93-02				**PZ147**	Fte	Ø 31,75	Ch 4220068-, Alu, +Cruise control
LD 260 E 52 Eng.8280.42S (378kW)	-02				**PZ093**	Fte	Ø 31,75	Ch 4220068-, -Cruise control
	93-02				**PZ147**	Fte	Ø 31,75	Ch 4220068-, Alu, +Cruise control
LD 400 E 38 Eng.8460.41 (221-234-254-276kW)	93-02				**PZ147**	Fte	Ø 31,75	Ch 4220068-, Alu, +Cruise control
LD 400 E 38 Eng.8460.41L/ K (221-234-254-276kW)	93-02				**PZ147**	Fte	Ø 31,75	Ch 4220068-, Alu, +Cruise control
LD 400 E 42 Eng.8210.42L (309kW)	-02				**PZ093**	Fte	Ø 31,75	Ch 4220068-, -Cruise control
	93-02				**PZ147**	Fte	Ø 31,75	Ch 4220068-, Alu, +Cruise control
LD 440 E 38 Eng.8460.41 (221-234-254-276kW)	93-02				**PZ147**	Fte	Ø 31,75	Ch 4220068-, Alu, +Cruise control
LD 440 E 39 Eng.F3AE0681E (287kW)	93-02				**PZ147**	Fte	Ø 31,75	Ch 4220068-, Alu, +Cruise control
LD 440 E 42 Eng.8210.42/ K/ L (243-265-272-277-309kW)	-02				**PZ093**	Fte	Ø 31,75	Ch 4220068-, -Cruise control
LD 440 E 43 Eng.F3AE0681D (316kW)	93-02				**PZ147**	Fte	Ø 31,75	Ch 4220068-, Alu, +Cruise control
LD 440 E 47 Eng.8210.42M (345kW)	93-02				**PZ147**	Fte	Ø 31,75	Ch 4220068-, Alu, +Cruise control
LD 440 E 52 Eng.8280.42S (378kW)	-02				**PZ093**	Fte	Ø 31,75	Ch 4220068-, -Cruise control
	93-02				**PZ147**	Fte	Ø 31,75	Ch 4220068-, Alu, +Cruise control
EuroTech MH 1/98-12/03								
190 E 24 Eng.F2BE0681D (180kW)					**PZ093**	Fte	Ø 31,75	Ch 4220068-, -Cruise control
190 E 27 Eng.F2BE0681C (200kW)					**PZ093**	Fte	Ø 31,75	Ch 4220068-, -Cruise control
190 E 27 Eng.F2BE0681F (200kW)					**PZ093**	Fte	Ø 31,75	Ch 4220068-, -Cruise control
190 E 31 Eng.F2BE0681B (228kW)					**PZ093**	Fte	Ø 31,75	Ch 4220068-, -Cruise control
190 E 35 Eng.F2BE0681A (259kW)					**PZ093**	Fte	Ø 31,75	Ch 4220068-, -Cruise control
260 E 24 Eng.F2BE0681D (180kW)					**PZ093**	Fte	Ø 31,75	-Cruise control
260 E 27 Eng.F2BE0681C (200kW)					**PZ093**	Fte	Ø 31,75	Ch 4220068-, -Cruise control
260 E 27 Eng.F2BE0681F (200kW)					**PZ093**	Fte	Ø 31,75	-Cruise control
260 E 31 Eng.F2BE0681B (228kW)					**PZ093**	Fte	Ø 31,75	-Cruise control
260 E 35 Eng.F2BE0681A (259kW)					**PZ093**	Fte	Ø 31,75	-Cruise control
400/440 E 31 Eng.F2BE0681B (228kW)					**PZ093**	Fte	Ø 31,75	Ch 4220068-, -Cruise control
400/440 E 35 Eng.F2BE0681A (259kW)					**PZ093**	Fte	Ø 31,75	Ch 4220068-, -Cruise control
EuroTech MP 1/92-12/03								
440 E 42 Eng.8210.42/ K/ L (243-265-272-277-309kW)					**PZ018**	Bdx	Ø 31,75	
EuroTrakker 1/93-12/04								
MP 190 E 30 Eng.8460.41 (221-234-254-276kW)	-04				**PZ093**	Fte	Ø 31,75	Ch 4220068-/C067797-, -Cruise control
MP 190 E 31 Eng.F2BE0681B (228kW)	99-04				**PZ093**	Fte	Ø 31,75	-Cruise control
MP 190 E 34 Eng.8460.41 (221-234-254-276kW)	-04				**PZ093**	Fte	Ø 31,75	Ch 4220068-/C067797-, -Cruise control
MP 190 E 35 Eng.F2BE0681A (259kW)	99-04				**PZ093**	Fte	Ø 31,75	-Cruise control
MP 190 E 37 Eng.8210.42/ K/ L (243-265-272-277-309kW)	-04				**PZ093**	Fte	Ø 31,75	Ch 4220068-/C067797-, -Cruise control
MP 190 E 38 Eng.F3BE0681G (280kW)	01-04				**PZ093**	Fte	Ø 31,75	-Cruise control
MP 190 E 42 Eng.8210.42/ K/ L (243-265-272-277-309kW)	-04				**PZ093**	Fte	Ø 31,75	Ch 4220068-/C067797-, -Cruise control
MP 190 E 44 Eng.F3BE0681C (324kW)	00-04				**PZ093**	Fte	Ø 31,75	-Cruise control
MP 260 E 30 Eng.8460.41 (221-234-254-276kW)	-04				**PZ093**	Fte	Ø 31,75	Ch 4220068-/C067797-, -Cruise control
MP 260 E 31 Eng.F2BE0681B (228kW)	99-04				**PZ093**	Fte	Ø 31,75	-Cruise control
MP 260 E 34 Eng.8460.41 (221-234-254-276kW)	-04				**PZ093**	Fte	Ø 31,75	Ch 4220068-/C067797-, -Cruise control
MP 260 E 35 Eng.F2BE0681A (259kW)	99-04				**PZ093**	Fte	Ø 31,75	-Cruise control
MP 260 E 37 Eng.8210.42/ K/ L (243-265-272-277-309kW)	-04				**PZ093**	Fte	Ø 31,75	Ch 4220068-/C067797-, -Cruise control
MP 260 E 38 Eng.F3BE0681G (280kW)	01-04				**PZ093**	Fte	Ø 31,75	-Cruise control
MP 260 E 42 Eng.8210.42/ K/ L (243-265-272-277-309kW)	-04				**PZ093**	Fte	Ø 31,75	Ch 4220068-/C067797-, -Cruise control
MP 260 E 44 Eng.F3BE0681C (324kW)	00-04				**PZ093**	Fte	Ø 31,75	-Cruise control

IVECO TRUCK

		Spare Parts	F/R	L/R	FRITECH ref.		DIMENSIONS mm.	NOTE
MP 340 E 34 Eng.8460.41 (221-234-254-276kW)	-04				**PZ093**	Fte	Ø 31,75	Ch 4220068-/C067797-, -Cruise control
MP 340 E 35 Eng.F2BE0681A (259kW)	99-04				**PZ093**	Fte	Ø 31,75	-Cruise control
MP 340 E 37 Eng.8210.42/ K/ L (243-265-272-277-309kW)	-04				**PZ093**	Fte	Ø 31,75	Ch 4220068-/C067797-, -Cruise control
MP 340 E 38 Eng.F3BE0681G (280kW)	01-04				**PZ093**	Fte	Ø 31,75	-Cruise control
MP 340 E 42 Eng.8210.42/ K/ L (243-265-272-277-309kW)	-04				**PZ093**	Fte	Ø 31,75	Ch 4220068-/C067797-, -Cruise control
MP 340 E 44 Eng.F3BE0681C (324kW)	01-04				**PZ093**	Fte	Ø 31,75	-Cruise control
MP 380 E 34 Eng.8460.41 (221-234-254-276kW)	-04				**PZ093**	Fte	Ø 31,75	Ch 4220068-/C067797-, -Cruise control
MP 380 E 37 Eng.8210.42/ K/ L (243-265-272-277-309kW)	-04				**PZ093**	Fte	Ø 31,75	Ch 4220068-/C067797-, -Cruise control
MP 380 E 38 Eng.F3BE0681G (280kW)	01-04				**PZ093**	Fte	Ø 31,75	-Cruise control
MP 380 E 42 Eng.8210.42/ K/ L (243-265-272-277-309kW)	-04				**PZ093**	Fte	Ø 31,75	Ch 4220068-/C067797-, -Cruise control
MP 380 E 44 Eng.F3BE0681C (324kW)	01-04				**PZ093**	Fte	Ø 31,75	-Cruise control
MP 400 E 34 Eng.8460.41 (221-234-254-276kW)	-04				**PZ093**	Fte	Ø 31,75	Ch 4220068-/C067797-, -Cruise control
MP 400 E 37 Eng.8210.42/ K/ L (272kW)	-04				**PZ093**	Fte	Ø 31,75	Ch 4220068-/C067797-, -Cruise control
MP 400 E 42 Eng.8210.42/ K/ L (243-265-272-277-309kW)	-04				**PZ093**	Fte	Ø 31,75	Ch 4220068-/C067797-, -Cruise control
MP 410 E 37 Eng.8210.42/ K/ L (243-265-272-277-309kW)	-04				**PZ093**	Fte	Ø 31,75	Ch 4220068-/C067797-, -Cruise control
MP 410 E 38 Eng.F3BE0681G (280kW)	01-04				**PZ093**	Fte	Ø 31,75	-Cruise control
MP 410 E 42 Eng.8210.42/ K/ L (243-265-272-277-309kW)	-04				**PZ093**	Fte	Ø 31,75	Ch 4220068-/C067797-, -Cruise control
MP 410 E 44 Eng.F3BE0681C (324kW)	01-04				**PZ093**	Fte	Ø 31,75	-Cruise control
MP 440 E 34 Eng.8460.41 (221-234-254-276kW)	93-04				**PZ093**	Fte	Ø 31,75	Ch 4220068-/C067797-, -Cruise control
MP 440 E 42 Eng.8210.42/ K/ L (243-265-272-277-309kW)	93-04				**PZ093**	Fte	Ø 31,75	Ch 4220068-/C067797-, -Cruise control
MP 720 E 37 Eng.8210.42/ K/ L (243-265-272-277-309kW)	93-04				**PZ093**	Fte	Ø 31,75	Ch 4220068-/C067797-, -Cruise control
MP 720 E 42 Eng.8210.42/ K/ L (243-265-272-277-309kW)	93-04				**PZ093**	Fte	Ø 31,75	Ch 4220068-/C067797-, -Cruise control
Leoncino 1/55-12/60								
- Eng.C01D			F/R		**CF188**		Ø 25,40	
					PF027		Ø 25,40	
					CZ005		Ø 19,05	Alu
					CZ101		Ø 19,05	
					PZ007		Ø 19,05	
- Eng.C03 70/ 100			F/R		**CF188**		Ø 25,40	
					PF027		Ø 25,40	
					CZ005		Ø 19,05	Alu
					CZ101		Ø 19,05	
					PZ007		Ø 19,05	
Lupetto 1/60-								
- Eng.C01K			F		**CF188**		Ø 25,40	
			R		**CF170**		Ø 22,22	
					PF027		Ø 25,40	
					CZ005		Ø 19,05	Alu
					CZ101		Ø 19,05	
					PZ007		Ø 19,05	
- Eng.C02D			F		**CF188**		Ø 25,40	
			R		**CF170**		Ø 22,22	
					PF027		Ø 25,40	
					CZ005		Ø 19,05	Alu
					CZ101		Ø 19,05	
					PZ007		Ø 19,05	
- Eng.C03 70/ 100			F		**CF188**		Ø 25,40	
			R		**CF170**		Ø 22,22	
					PF027		Ø 25,40	
					CZ005		Ø 19,05	Alu
					CZ101		Ø 19,05	
					PZ007		Ø 19,05	

		Spare Parts	F/R	L/R	FRITECH ref.		DIMENSIONS mm.	NOTE
Orsetto 1/65-								
2.7 D Eng.230A.000			F		**CF169**		Ø 26,98	
			R		**CF170**		Ø 22,22	
					PF028		Ø 25,40	
					PF126		Ø 25,40	
					CZ005		Ø 19,05	Alu
					CZ101		Ø 19,05	
					PZ009		Ø 19,05	Alu
3.1 D Eng.8040.01(804A) (60kW)			F		**CF169**		Ø 26,98	
			R		**CF170**		Ø 22,22	
					PF028		Ø 25,40	
					PF126		Ø 25,40	
					CZ005		Ø 19,05	Alu
					CZ101		Ø 19,05	
					PZ009		Ø 19,05	Alu
3.4 D Eng.8040.02 (60kW)			F		**CF169**		Ø 26,98	
			R		**CF170**		Ø 22,22	
					PF028		Ø 25,40	
					PF126		Ø 25,40	
					CZ005		Ø 19,05	Alu
					CZ101		Ø 19,05	
					PZ009		Ø 19,05	Alu
Stralis 1/02-								
AD/AT 190S31 Eng.F2BE0681B (228kW)	03-				**PZ147**	Fte	Ø 31,75	Alu, +Cruise control
AD/AT 190S35 Eng.F2BE0681A (259kW)	03-				**PZ093**	Fte	Ø 31,75	-Cruise control
	03-				**PZ147**	Fte	Ø 31,75	Alu, +Cruise control
AD/AT 190S40 Eng.F3AE0681B (294kW)	03-				**PZ093**	Fte	Ø 31,75	-Cruise control
	03-				**PZ147**	Fte	Ø 31,75	Alu, +Cruise control
AD/AT 190S43 Eng.F3AE0681D (316kW)	03-				**PZ093**	Fte	Ø 31,75	-Cruise control
	03-				**PZ147**	Fte	Ø 31,75	Alu, +Cruise control
AD/AT 260S31 Eng.F2BE0681B (228kW)	03-				**PZ093**	Fte	Ø 31,75	-Cruise control
	03-				**PZ147**	Fte	Ø 31,75	Alu, +Cruise control
AD/AT 260S35 Eng.F2BE0681A (259kW)	03-				**PZ093**	Fte	Ø 31,75	-Cruise control
	03-				**PZ147**	Fte	Ø 31,75	Alu, +Cruise control
AD/AT 260S40 Eng.F3AE0681B (294kW)	03-				**PZ093**	Fte	Ø 31,75	-Cruise control
	03-				**PZ147**	Fte	Ø 31,75	Alu, +Cruise control
AD/AT 260S43 Eng.F3AE0681D (316kW)	03-				**PZ093**	Fte	Ø 31,75	-Cruise control
	03-				**PZ147**	Fte	Ø 31,75	Alu, +Cruise control
AD/AT 440S35 Eng.F2BE0681A (259kW)	03-				**PZ093**	Fte	Ø 31,75	-Cruise control
	03-				**PZ147**	Fte	Ø 31,75	Alu, +Cruise control
AD/AT 440S40 Eng.F3AE0681B (294kW)	03-				**PZ093**	Fte	Ø 31,75	-Cruise control
	03-				**PZ147**	Fte	Ø 31,75	Alu, +Cruise control
AD/AT 440S43 Eng.F3AE0681D (316kW)	03-				**PZ093**	Fte	Ø 31,75	-Cruise control
	03-				**PZ147**	Fte	Ø 31,75	Alu, +Cruise control
AS 190S40 Eng.F3AE0681B (294kW)	02-				**PZ093**	Fte	Ø 31,75	-Cruise control
	02-				**PZ147**	Fte	Ø 31,75	Alu, +Cruise control
AS 190S43 Eng.F3AE0681D (316kW)	02-				**PZ093**	Fte	Ø 31,75	-Cruise control
	02-				**PZ147**	Fte	Ø 31,75	Alu, +Cruise control
AS 190S48 Eng.F3BE0681E (353kW)	02-				**PZ093**	Fte	Ø 31,75	-Cruise control
	02-				**PZ147**	Fte	Ø 31,75	Alu, +Cruise control
AS 260S40 Eng.F3AE0681B (294kW)	02-				**PZ093**	Fte	Ø 31,75	-Cruise control
	02-				**PZ147**	Fte	Ø 31,75	Alu, +Cruise control
AS 260S43 Eng.F3AE0681D (316kW)	02-				**PZ093**	Fte	Ø 31,75	-Cruise control
	02-				**PZ147**	Fte	Ø 31,75	Alu, +Cruise control
AS 260S48 Eng.F3BE0681E (353kW)	02-				**PZ093**	Fte	Ø 31,75	-Cruise control
	02-				**PZ147**	Fte	Ø 31,75	Alu, +Cruise control
AS 440S40 Eng.F3AE0681B (294kW)	02-				**PZ093**	Fte	Ø 31,75	-Cruise control
	02-				**PZ147**	Fte	Ø 31,75	Alu, +Cruise control
AS 440S43 Eng.F3AE0681D (316kW)	02-				**PZ093**	Fte	Ø 31,75	-Cruise control
	02-				**PZ147**	Fte	Ø 31,75	Alu, +Cruise control
AS 440S48 Eng.F3BE0681E (353kW)	02-				**PZ093**	Fte	Ø 31,75	-Cruise control
	03-				**PZ147**	Fte	Ø 31,75	Alu, +Cruise control

IVECO TRUCK

		Spare Parts	F/R	L/R	FRITECH ref.		DIMENSIONS mm.	NOTE
Tigrotto 1/65-								
- Eng.C01D			F/R		**CF333**		Ø 28,57	
					CZ005		Ø 19,05	Alu
					CZ101		Ø 19,05	
					PZ007		Ø 19,05	
- Eng.C01K			F/R		**CF333**		Ø 28,57	
					CZ005		Ø 19,05	Alu
					CZ101		Ø 19,05	
					PZ007		Ø 19,05	
- Eng.C02D			F/R		**CF333**		Ø 28,57	
					CZ005		Ø 19,05	Alu
					CZ101		Ø 19,05	
					PZ007		Ø 19,05	
- Eng.C03 70/ 100			F/R		**CF333**		Ø 28,57	
					CZ005		Ø 19,05	Alu
					CZ101		Ø 19,05	
					PZ007		Ø 19,05	
- Eng.C03D/ 20			F/R		**CF333**		Ø 28,57	
					CZ005		Ø 19,05	Alu
					CZ101		Ø 19,05	
					PZ007		Ø 19,05	
Turbostar 7/84-12/93								
190.33 Eng.8210.22 (224kW)					**PZ001**		Ø 31,75	
190.36 Eng.8210.42/ K/ L (243-265-272-277-309kW)					**PZ001**		Ø 31,75	
190.42 Eng.8280.22 (309-281-310kW)					**PZ001**		Ø 31,75	
Z 230 T								
All models			R		**CF536**		Ø 23,81	

JAGUAR

Double Six & Sovereign 1/76-1/84								
All models	76-84				**PF090**		Ø 23,81	
XJ I 9/68-9/86								
3.4 Eng.XK3.4(82-86) (119kW)	-86				**PF090**		Ø 23,81	Vett 3A51203-
4.2 Eng.XK4.2 (124-127kW)	-79				**PF090**		Ø 23,81	Vett 2J53208-
4.2 Eng.XK4.2 (151kW)	-86				**PF090**		Ø 23,81	Vett 2J53208-
5.3 Eng.V12 (211kW)					**PF090**		Ø 23,81	Vett 2R57411-
5.3 (197kW)					**PF090**		Ø 23,81	Vett 2R57411-

JEEP

Cherokee II (XJ) 10/84-8/01								
2.1 TD, 4WD Eng.J8S (59-64kW)	87-92		R		**CF695**		Ø 20,64	Rear Drum Brake, -ABS
	84-				**CZ121**		Ø 22,20	
2.5 i Eng.EPE/ HX (87-90kW)	91-3/00		R		**CF695**		Ø 20,64	Rear Drum Brake, -ABS
2.5 SE Eng.EPE (87kW)	96-99				**PF810**		Ø 25,40	Alu
2.5 TD, 4WD Eng.VM425 (85-89kW)	89-3/00		R		**CF695**		Ø 20,64	Rear Drum Brake, -ABS
	88-01				**PF810**		Ø 25,40	Alu
	-8/96				**CZ121**		Ø 22,20	
4.0 i Eng.C698QA (127-131kW)	1/95-3/00		R		**CF695**		Ø 20,64	Rear Drum Brake, -ABS
	95-01				**PF810**		Ø 25,40	Alu
4.0 i Eng.ERH (136kW)	9/89-		R		**CF695**		Ø 20,64	Rear Drum Brake, -ABS
4.0 i Eng.MX (135kW)	91-		R		**CF695**		Ø 20,64	Rear Drum Brake, -ABS
4.0 i Eng.S01 (135kW)	00-01				**PF810**		Ø 25,40	Alu
Cherokee III (KJ) 9/01-6/08								
2.5 CRD Eng.ENJ (105kW)	01-04		R		**CF956**		Ø 20,64	
	01-08				**PF981**		Ø 26,99	Alu
2.8 CRD Eng.ENR (110kW)	02-08				**PF981**		Ø 26,99	Alu
2.8 CRD Eng.ENR (120kW)	04-08				**PF981**		Ø 26,99	Alu
3.7 V6 Eng.EKG (150-155-157kW)	01-08				**PF981**		Ø 26,99	Alu
Cherokee IV (KK) 7/08-3/14								
2.8 CRD Eng.ENS (130kW)	08-				**PF939**	Bch	Ø 26,99	Alu
3.7 V6, 4WD Eng.EKG (151-157kW)	08-				**PF939**	Bch	Ø 26,99	Alu

		Spare Parts	F/R	L/R	FRITECH ref.		DIMENSIONS mm.	NOTE
Compass 9/06-								
2.0 Eng.ECN (115kW)	11-				**PF940**	Ate	Ø 20,64	Alu
2.0 CRD Eng.BMM (103kW)	06-				**PF940**	Ate	Ø 20,64	Alu
2.2 CRD Eng.OM651.925 (120kW)	11-		R		**CF994**		Ø 20,64	
	11-				**PF940**	Ate	Ø 20,64	Alu
2.2 CRD, 4WD Eng.ENE (100kW)	11-		R		**CF994**		Ø 20,64	
	11-				**PF940**	Ate	Ø 20,64	Alu
2.4 Eng.ERZ (125kW)	06-				**PF940**	Ate	Ø 20,64	Alu
Grand Cherokee I (Z) 9/91-4/99								
2.5 TD Eng.M52/ M51 (85kW)	95-99				**PF810**		Ø 25,40	Alu
4.0 Eng.S01 (130kW)	95-99				**PF810**		Ø 25,40	Alu
4.0 i Eng.MX (132-135kW)	91-99				**PF810**		Ø 25,40	Alu
4.0 Laredo Eng.ERH (131kW)	96-98				**PF810**		Ø 25,40	Alu
5.2 Eng.Y01 (155-156-158kW)	92-99				**PF810**		Ø 25,40	Alu
5.2 Limited 4WD Eng.ELF (136kW)	96-98				**PF810**		Ø 25,40	Alu
5.9 i Eng.Z00 (177kW)	97-99				**PF810**		Ø 25,40	Alu
Patriot 11/07-12/12								
2.0 CRD Eng.BYL / ECD/ ECE (103kW)	07-				**PF940**	Ate	Ø 20,64	Alu
2.4 Eng.ERZ/ ED3 (125kW)	07-				**PF940**	Ate	Ø 20,64	Alu
Wrangler II (TJ) 8/96-4/07								
2.5 Eng.P00 (87kW)	96-		R		**CF695**		Ø 20,64	Rear Drum Brake, -ABS
4.0 Eng.S00 (124kW)	98-		R		**CF695**		Ø 20,64	Rear Drum Brake, -ABS
4.0 Eng.S01 (130kW)	96-		R		**CF695**		Ø 20,64	Rear Drum Brake, -ABS

JEEP USA

Cherokee								
All models	93-96		R	L	**CF436**		Ø 22,20	
	71-73		R	L	**CF609**		Ø 23,81	+AA
	93-96		R	R	**CF437**		Ø 22,20	
	71-73		R	R	**CF610**		Ø 23,81	+AA
	84-95		R		**CF319**		Ø 19,05	
	74-91		R		**CF931**		Ø 23,81	
Comanche								
All models	86-92		R	L	**CF436**		Ø 22,20	HDB
	86-92		R	R	**CF437**		Ø 22,20	HDB
	90-91		R		**CF319**		Ø 19,05	
Dispatcher								
All models	72-73		R	L	**CF609**		Ø 23,81	
	72-73		R	R	**CF610**		Ø 23,81	
Grand Cherokee								
All models	93-96		R	L	**CF436**		Ø 22,20	
	71-73		R	L	**CF609**		Ø 23,81	+AA
	93-96		R	R	**CF437**		Ø 22,20	
	71-73		R	R	**CF610**		Ø 23,81	+AA
	84-95		R		**CF319**		Ø 19,05	
	74-91		R		**CF931**		Ø 23,81	
Jeepster Commando								
All models	72-73		R	L	**CF609**		Ø 23,81	
	72-73		R	R	**CF610**		Ø 23,81	
Liberty								
All models	-02		R		**CF956**		Ø 20,64	
Serie CJ - Universal 4x4								
All models	76-86		R	L	**CF436**		Ø 22,20	Exc. 10Inch
	72-75		R	L	**CF609**		Ø 23,81	
	76-86		R	R	**CF437**		Ø 22,20	Exc. 10Inch
	72-75		R	R	**CF610**		Ø 23,81	
Serie J10, J20								
All models	72-73		R	L	**CF609**		Ø 23,81	+AA
	72-73		R	R	**CF610**		Ø 23,81	+AA
	74-88		R		**CF931**		Ø 23,81	Exc. Model 27
	78-88		R		**CF932**		Ø 25,40	
Serie YJ								
All models	87-89		R	L	**CF436**		Ø 22,20	Exc. 10Inch
	87-89		R	R	**CF437**		Ø 22,20	Exc. 10Inch

JEEP USA

		Spare Parts	F/R	L/R	FRITECH ref.		DIMENSIONS mm.	NOTE
Wagoneer - Grand Wagoneer								
All models	93-96		R	L	**CF436**		Ø 22,20	Exc. 10Inch
	71-73		R	L	**CF609**		Ø 23,81	+AA
	93-96		R	R	**CF437**		Ø 22,20	Exc. 10Inch
	71-73		R	R	**CF610**		Ø 23,81	+AA
	1/90-12/90		R		**CF319**		Ø 19,05	
	74-91		R		**CF931**		Ø 23,81	
Wrangler								
All models	87-89		R	L	**CF436**		Ø 22,20	
	87-89		R	R	**CF437**		Ø 22,20	
	97-98		R		**CF319**		Ø 19,05	

KIA

Carens I 11/00-7/02								
1.8 Eng.TBD (81kW)	-02		R		**CF775**		Ø 19,05	-ABS
Carens II (FJ) 7/02-8/06								
2.0 CRDi Eng.D4EA (103kW)	05-06				**PF922**	Kasco	Ø 25,40	Alu, +ESP, M/T+A/T
	05-06				**PF920**		Ø 25,40	Alu, -ESP
Carens III 9/06-12/09								
2.0 CRDi Eng.D4EA (103kW)	06-				**PF922**	Kasco	Ø 25,40	Alu, +ESP, M/T+A/T
	06-09				**PF920**		Ø 25,40	Alu, -ESP
	06-09				**CZ130**		Ø 20,64	Alu, LHD
2.0 CVVT Eng.G4KA (106kW)	06-				**PF922**	Kasco	Ø 25,40	Alu, +ESP, M/T+A/T
	06-09				**PF920**		Ø 25,40	Alu, -ESP
	06-09				**CZ130**		Ø 20,64	Alu
Carnival I (UP) 8/99-10/01								
2.5 V6 Eng.KV6 (121kW)	6/00-		R	L	**CF877**		Ø 22,20	Alu, +ABS
	12/99-01		R	L	**CF816**		Ø 20,64	Alu, -ABS
	6/00-		R	R	**CF878**		Ø 22,20	Alu, +ABS
	12/99-01		R	R	**CF817**		Ø 20,64	Alu, -ABS
	-5/00		R		**CF833**		Ø 20,64	+/-ABS
2.9 TD Eng.J3 TCI (93kW)	6/00-		R	L	**CF877**		Ø 22,20	Alu, +ABS
	12/99-01		R	L	**CF816**		Ø 20,64	Alu, -ABS
	6/00-		R	R	**CF878**		Ø 22,20	Alu, +ABS
	12/99-01		R	R	**CF817**		Ø 20,64	Alu, -ABS
	-5/00		R		**CF833**		Ø 20,64	+/-ABS
Carnival II/ Sedona (GQ) 10/01-5/06								
2.5 V6 Eng.OK52 (110kW)	01-03		R	L	**CF877**		Ø 22,20	Alu, +ABS
	01-06		R	L	**CF1017**		Ø 19,05	Alu, -ABS
	01-03		R	R	**CF878**		Ø 22,20	Alu, +ABS
	01-06		R	R	**CF1016**		Ø 19,05	Alu, -ABS
2.9 CRDi Eng.OK53 (106kW)	01-		R	L	**CF877**		Ø 22,20	Alu, +ABS
	01-06		R	L	**CF1017**		Ø 19,05	Alu, -ABS
	01-		R	R	**CF878**		Ø 22,20	Alu, +ABS
	01-06		R	R	**CF1016**		Ø 19,05	Alu, -ABS
Ceed I, SW (ED) 3/07-6/12								
1.4 Eng.G4FA (77kW)	10-				**PF953**		Ø 22,20	Alu, +ESP
1.4 Eng.G4FA (80kW)	07-				**PF953**		Ø 22,20	Alu, +ESP
1.4 CVVT Eng.G4FA-L (66kW)	10-				**PF953**		Ø 22,20	Alu, +ESP
1.6 Eng.G4HE (85kW)	07-				**PF953**		Ø 22,20	Alu, +ESP
1.6 CRDi Eng.D4FB (85kW)	07-				**PF953**		Ø 22,20	Alu, +ESP
1.6 CRDi Eng.D4FB-L (66kW)	07-				**PF953**		Ø 22,20	Alu, +ESP
1.6 CVVT Eng.G4FC (90-93kW)	07-				**PF953**		Ø 22,20	Alu, +ESP
2.0 Eng.G4GC (105kW)	07-				**PF953**		Ø 22,20	Alu, +ESP
2.0 CRDi Eng.D4EA-F (100-103kW)	07-				**PF953**		Ø 22,20	Alu, +ESP
Cerato (LD) 4/04-12/08								
1.6 Eng.G4GD (77kW)	04-				**CZ130**		Ø 20,64	Alu
1.6, Coupe Eng.G4FC (90kW)	06-				**CZ130**		Ø 20,64	Alu
2.0 Eng.G4GC (105kW)	04-				**CZ130**		Ø 20,64	Alu
2.0 CRDi Eng.D4DA (83kW)	04-				**CZ130**		Ø 20,64	Alu
Magentis I (GD) 5/01-10/05								
2.0 Eng.G4JP (100kW)	01-05		R	L	**CF253**		Ø 19,05	Alu
	01-05		R	R	**CF252**		Ø 19,05	Alu

		Spare Parts	F/R	L/R	FRITECH ref.		DIMENSIONS mm.	NOTE
Picanto I (BC) 4/04-4/08								
1.0 Eng.G4HE (45kW)	05-		R		**CF889**		Ø 15,87	Alu, -ABS
1.1 Eng.G4HG (48kW)	04-		R		**CF889**		Ø 15,87	Alu, -ABS
1.1 D Eng.D3FA (55kW)	05-		R		**CF889**		Ø 15,87	Alu, -ABS
Picanto II (BA) 5/08-4/11								
1.0 12v Eng.G4HE (45kW)	08-		R		**CF889**		Ø 15,87	Alu
1.0 12v Eng.G4HE (46kW)	08-		R		**CF889**		Ø 15,87	Alu
1.1 12v Eng.G4HG (48kW)	08-		R		**CF889**		Ø 15,87	Alu
1.1 CRDi Eng.D3FA (55kW)	08-		R		**CF889**		Ø 15,87	Alu
Picanto III (TA) 5/11-								
1.0 Eng.G3LA (51kW)	11-		R	L	**CF999**		Ø 17,46	Alu
	11-		R	R	**CF1000**		Ø 17,46	Alu
1.0 Eng.G3LA (60kW)	11-		R	L	**CF999**		Ø 17,46	Alu
	11-		R	R	**CF1000**		Ø 17,46	Alu
1.0 (49kW)	15-		R	L	**CF999**		Ø 17,46	Alu
	15-		R	R	**CF1000**		Ø 17,46	Alu
1.0 GPL (51kW)	13-		R	L	**CF999**		Ø 17,46	Alu
	13-		R	R	**CF1000**		Ø 17,46	Alu
1.0 LPG Eng.B3LA (49kW)	13-		R	L	**CF999**		Ø 17,46	Alu
	13-		R	R	**CF1000**		Ø 17,46	Alu
1.2 Eng.G4LA (63kW)	11-		R	L	**CF999**		Ø 17,46	Alu
	11-		R	R	**CF1000**		Ø 17,46	Alu
Pride (DA) 1/90-12/00								
1.3 16v Eng.B3 (44-47-53kW)	90-		R		**CF302**		Ø 15,87	
Pro Ceed I (ED) 2/08-12/12								
1.4 CVVT Eng.G4FA-L (66kW)	10-				**PF953**		Ø 22,20	Alu, +ESP
1.6 Eng.G4FC (90kW)	08-				**PF953**		Ø 22,20	Alu, +ESP
1.6 Eng.G4FC (93kW)	08-				**PF953**		Ø 22,20	Alu, +ESP
1.6 CRDi Eng.D4FB (85kW)	08-				**PF953**		Ø 22,20	Alu, +ESP
2.0 Eng.G4GC (105kW)	08-				**PF953**		Ø 22,20	Alu, +ESP
2.0 CRDi Eng.D4EA-F (103kW)	08-				**PF953**		Ø 22,20	Alu, +ESP
Rio I, SW (DC) 8/00-2/05								
1.3 Eng.A3E (55-60kW)	00-7/02		R		**CF236**		Ø 17,46	
	7/02-05		R		**CF969**		Ø 17,46	Alu
	02-05				**PF952**	Kasco	Ø 22,20	Alu, +ABS
1.5 Eng.A5D (71-72kW)	00-7/02		R		**CF236**		Ø 17,46	
	7/02-05		R		**CF969**		Ø 17,46	Alu
	02-05				**PF952**	Kasco	Ø 22,20	Alu, +ABS
Rio II (JB) 3/05-9/11								
1.4 16v Eng.G4EE (71kW)	05-		R		**CF834**		Ø 17,46	Alu
	05-				**PF949**	Kasco	Ø 22,20	Alu, +ABS, -ESP
1.5 CRDi Eng.D4FA (81kW)	05-		R		**CF834**		Ø 17,46	Alu
1.6 16v Eng.G4ED (82kW)	05-		R		**CF834**		Ø 17,46	Alu
	05-				**PF949**	Kasco	Ø 22,20	Alu, +ABS, -ESP
Rio III (UB) 9/11-								
1.1 CRDi Eng.D3FA (55kW)	11-		R	L	**CF862**		Ø 17,78	Alu, Rear drum brake
	11-		R	R	**CF863**		Ø 17,78	Alu, Rear drum brake
1.2 CVVT Eng.G4LA (62kW)	11-		R	L	**CF862**		Ø 17,78	Alu, Rear drum brake
	11-		R	R	**CF863**		Ø 17,78	Alu, Rear drum brake
1.2 CVVT Eng.G4LA (65kW)	11-		R	L	**CF862**		Ø 17,78	Alu, Rear drum brake
	11-		R	R	**CF863**		Ø 17,78	Alu, Rear drum brake
1.2 CVVT GPL Eng.G4LA (62kW)	13-		R	L	**CF862**		Ø 17,78	Alu, Rear drum brake
	13-		R	R	**CF863**		Ø 17,78	Alu, Rear drum brake
1.4 CRDi Eng.D4FC (66kW)	11-		R	L	**CF862**		Ø 17,78	Alu, Rear drum brake
	11-		R	R	**CF863**		Ø 17,78	Alu, Rear drum brake
1.4 CVVT Eng.G4FA (80kW)	11-		R	L	**CF862**		Ø 17,78	Alu, Rear drum brake
	11-		R	R	**CF863**		Ø 17,78	Alu, Rear drum brake
Sephia, Timor (FA) 9/93-12/03								
1.5 i 16v Eng.B5 (59kW)	96-97		R		**CF775**		Ø 19,05	
1.6 i Eng.B6 (59kW)	93-		R		**CF775**		Ø 19,05	
1.8 i 16v Eng.T8 (82kW)	95-		R		**CF775**		Ø 19,05	
Shuma (FB) 3/96-12/04								
1.5 Eng.BFD (59kW)	96-98		R		**CF775**		Ø 19,05	

KIA

		Spare Parts	F/R	L/R	FRITECH ref.		DIMENSIONS mm.	NOTE
1.6 Eng.S6D (75kW)	01-04		R		**CF969**		Ø 17,46	Alu
Sorento I (JC) 8/02-12/09								
2.4 Eng.G4JSG (102kW)	02-				**PF813**		Ø 26,99	Alu, +ABS, -ESP, M/T+A/T
2.5 CRDi Eng.D4CB (103kW)	02-				**PF929**	Kasco	Ø 26,99	Alu, +ABS, +ESP
	02-				**PF813**		Ø 26,99	Alu, +ABS, -ESP, M/T+A/T
2.5 CRDi Eng.D4CBV (125kW)	06-				**PF929**	Kasco	Ø 26,99	Alu, +ABS, +ESP
	06-				**PF813**		Ø 26,99	Alu, +ABS, -ESP, M/T+A/T
3.3 V6 Eng.G6HV (177kW)	06-				**PF929**	Kasco	Ø 26,99	Alu, +ABS, +ESP
	06-				**PF813**		Ø 26,99	Alu, +ABS, -ESP
3.5 V6 24v Eng.6G74 (143-149kW)	02-				**PF813**		Ø 26,99	Alu, +ABS, -ESP, M/T+A/T
Sportage I (FM, K00) 4/94-8/04								
2.0 i 16v, 4WD Eng.FE(16V) (94kW)	94-97		R		**CF833**		Ø 20,64	
	97-04		R		**CF982**		Ø 20,64	
2.0 i 4WD Eng.FE (70kW)	94-97		R		**CF833**		Ø 20,64	
	97-99		R		**CF982**		Ø 20,64	
2.0 TD 4WD Eng.RF (61kW)	97-01		R		**CF982**		Ø 20,64	
2.0, 4WD Eng.FE DOHC (87kW)	00-04		R		**CF982**		Ø 20,64	
	00-04				**PF921**		Ø 25,40	Alu, +ABS
Sportage II (FQ) 9/04-6/10								
2.0 16v, 4WD Eng.G4GC (104kW)	04-10				**PF947**	Man	Ø 25,40	Alu, +TC
	04-10				**CZ130**		Ø 20,64	Alu
2.0 CRDi Eng.D4EA (103kW)	06-10				**PF947**	Man	Ø 25,40	Alu, +TC
	06-10				**CZ130**		Ø 20,64	Alu, M/T
2.0 CRDi, 4WD Eng.D4EA (83kW)	04-10				**PF947**	Man	Ø 25,40	Alu, +TC
	04-10				**CZ130**		Ø 20,64	Alu, M/T
2.7 V6 4WD Eng.G6BA (129kW)	04-10				**PF947**	Man	Ø 25,40	Alu, +TC
Sportage III (SL) 7/10-2/16								
2.0, AWD Eng.G4KD (120-122kW)	10-				**CZ130**		Ø 20,64	Alu

KIA LCV

Pregio (TB) 10/97-12/06								
2.5 TCi Eng.D4BH (69kW)	02-04		R	L	**CF1005**		Ø 19,05	
	5/04-		R	L	**CF1008**		Ø 19,05	
	02-04		R	R	**CF1006**		Ø 19,05	
	5/04-		R	R	**CF1007**		Ø 19,05	
2.7 D Eng.J2 (60kW)	5/04-		R	L	**CF1008**		Ø 19,05	
	97-04		R	L	**CF1005**		Ø 19,05	
	5/04-		R	R	**CF1007**		Ø 19,05	
	97-04		R	R	**CF1006**		Ø 19,05	

LADA

110 1/95-								
1.5, 16v Eng.VAZ 2111/ VAZ 2112 (57-67-70kW)	00-		R		**CF171**		Ø 20,64	
	00-				**PF024**		Ø 20,64	
111 1/95-								
1.5 Eng.2111 (56kW)	00-		R		**CF171**		Ø 20,64	
	00-				**PF024**		Ø 20,64	
1.5 Eng.VAZ 2111 (57kW)	96-		R		**CF171**		Ø 20,64	
	96-				**PF024**		Ø 20,64	
1.5 16v Eng.VAZ 2112 (67-70kW)	95-		R		**CF171**		Ø 20,64	
	95-				**PF024**		Ø 20,64	
112 1/95-								
1.5 Eng.2111 (56kW)	00-		R		**CF171**		Ø 20,64	
	00-				**PF024**		Ø 20,64	
1.5 Eng.VAZ 2111 (54-57kW)	95-		R		**CF171**		Ø 20,64	
	95-				**PF024**		Ø 20,64	
1.5 16v Eng.VAZ 2112 (67kW)	00-		R		**CF171**		Ø 20,64	
	00-				**PF024**		Ø 20,64	
1.5 16v Eng.VAZ 2112 (70kW)	95-		R		**CF171**		Ø 20,64	
	95-				**PF024**		Ø 20,64	
1200-1600 1/70-1/87								
1.2, SW Eng.BA32101 (44kW)	70-76		R		**CF002**		Ø 19,05	
	76-		R		**CF195**		Ø 20,64	
	70-86				**PF015**		Ø 19,05	

		Spare Parts	F/R	L/R	FRITECH ref.		DIMENSIONS mm.	NOTE
1.2, SW Eng.BA32101 (44kW)	70-86				**CT001**	Benditalia	Ø 25,40	Alu
	70-86				**CZ010**		Ø 19,05	Alu
	70-86				**CZ102**		Ø 19,05	
	70-86				**PZ014**		Ø 19,05	Alu
	70-86				**PZ112**		Ø 19,05	
1.3 Eng.BA32103 (51kW)	74-76		R		**CF002**		Ø 19,05	
	76-		R		**CF195**		Ø 20,64	
	74-				**PF015**		Ø 19,05	
	74-				**CT001**	Benditalia	Ø 25,40	Alu
	74-				**CZ010**		Ø 19,05	Alu
	74-				**CZ102**		Ø 19,05	
	74-				**PZ014**		Ø 19,05	Alu
	74-				**PZ112**		Ø 19,05	
1.3, SW Eng.BA321011 (48kW)	78-		R		**CF195**		Ø 20,64	
	78-				**PF015**		Ø 19,05	
	78-				**CT001**	Benditalia	Ø 25,40	Alu
	78-				**CZ010**		Ø 19,05	Alu
	78-				**CZ102**		Ø 19,05	
	78-				**PZ014**		Ø 19,05	Alu
	78-				**PZ112**		Ø 19,05	
1.5, SW Eng.BA32105 (55kW)	72-76		R		**CF002**		Ø 19,05	
	76-		R		**CF195**		Ø 20,64	
	72-				**PF015**		Ø 19,05	
	72-				**CT001**	Benditalia	Ø 25,40	Alu
	72-				**CZ010**		Ø 19,05	Alu
	72-				**CZ102**		Ø 19,05	
	72-				**PZ014**		Ø 19,05	Alu
	72-				**PZ112**		Ø 19,05	
1.6 Eng.BA32106 (57kW)	79-		R		**CF195**		Ø 20,64	
	79-				**PF015**		Ø 19,05	
	79-				**CT001**	Benditalia	Ø 25,40	Alu
	79-				**CZ010**		Ø 19,05	Alu
	79-				**CZ102**		Ø 19,05	
	79-				**PZ014**		Ø 19,05	Alu
	79-				**PZ112**		Ø 19,05	
1.6 Eng.BA32106 (58kW)	72-76		R		**CF002**		Ø 19,05	
	72-		R		**CF195**		Ø 20,64	
	72-				**PF015**		Ø 19,05	
	72-				**CT001**	Benditalia	Ø 25,40	Alu
	72-				**CZ010**		Ø 19,05	Alu
	72-				**CZ102**		Ø 19,05	
	72-				**PZ014**		Ø 19,05	Alu
	72-				**PZ112**		Ø 19,05	
Kalina (1117, 1118, 1119) 10/04-11/13								
1.6 Eng.21114 (60kW)	04-		R		**CF171**		Ø 20,64	
1.6 16v (66kW)	04-		R		**CF171**		Ø 20,64	
Nadeschda (2120) 12/97-								
1.7 Eng.VAZ-2121.3 (59-60kW)	97-		R		**CF195**		Ø 20,64	
	97-				**PF073**		Ø 19,05	
1.8 Eng.VAZ-2130 (60-67kW)	97-		R		**CF195**		Ø 20,64	
	97-				**PF073**		Ø 19,05	
Natasha (2120)								
1.1	93-		R		**CF171**		Ø 20,64	
	93-				**PF024**		Ø 20,64	
1.5	93-		R		**CF171**		Ø 20,64	
	93-				**PF024**		Ø 20,64	
Niva I (2121) 12/76-								
1.6 Eng.BA32121 (54kW)	87-95		R		**CF195**		Ø 20,64	
	87-95				**PF073**		Ø 19,05	
	87-95				**CT001**	Benditalia	Ø 25,40	Alu
	87-95				**CZ010**		Ø 19,05	Alu
	87-95				**CZ102**		Ø 19,05	
	87-95				**PZ014**		Ø 19,05	Alu
	87-95				**PZ112**		Ø 19,05	

LADA

		Spare Parts	F/R	L/R	FRITECH ref.		DIMENSIONS mm.	NOTE
1.6 Eng.BA32121 (56-59kW)	76-		R		**CF195**		Ø 20,64	
	76-				**PF073**		Ø 19,05	
	76-				**CT001**	Benditalia	Ø 25,40	Alu
1.7 i Eng.BA321214 (59kW)	96-		R		**CF195**		Ø 20,64	
	96-				**PF073**		Ø 19,05	
	96-				**CT001**	Benditalia	Ø 25,40	Alu
	96-				**CZ010**		Ø 19,05	Alu
	96-				**CZ102**		Ø 19,05	
	96-				**PZ014**		Ø 19,05	Alu
	96-				**PZ112**		Ø 19,05	
1.7 i Eng.BA321214 (60kW)	00-		R		**CF195**		Ø 20,64	
	00-				**PF073**		Ø 19,05	
	00-				**CT001**	Benditalia	Ø 25,40	Alu
	00-				**CZ010**		Ø 19,05	Alu
	00-				**CZ102**		Ø 19,05	
	00-				**PZ014**		Ø 19,05	Alu
	00-				**PZ112**		Ø 19,05	
1.9 D Eng.XUD9A (47kW)	93-		R		**CF195**		Ø 20,64	
	93-				**PF073**		Ø 19,05	
	93-				**CT001**	Benditalia	Ø 25,40	Alu
	93-				**CZ010**		Ø 19,05	Alu
	93-				**CZ102**		Ø 19,05	
	93-				**PZ014**		Ø 19,05	Alu
	93-				**PZ112**		Ø 19,05	
1.9 D Eng.XUD9SD (55kW)	99-		R		**CF195**		Ø 20,64	
	99-				**PF073**		Ø 19,05	
	99-				**CT001**	Benditalia	Ø 25,40	Alu
	99-				**CZ010**		Ø 19,05	Alu
	99-				**CZ102**		Ø 19,05	
	99-				**PZ014**		Ø 19,05	Alu
	99-				**PZ112**		Ø 19,05	
Niva II (2123) 9/02-								
1.7 Eng.BA321214 (59kW)	02-		R		**CF171**		Ø 20,64	
	02-				**PF073**		Ø 19,05	
	02-				**CZ010**		Ø 19,05	Alu
	02-				**CZ102**		Ø 19,05	
	02-				**PZ014**		Ø 19,05	Alu
	02-				**PZ112**		Ø 19,05	
1.7 Eng.BA321214 (61kW)	04-		R		**CF171**		Ø 20,64	
	04-				**PF073**		Ø 19,05	
	04-				**CZ010**		Ø 19,05	Alu
	04-				**CZ102**		Ø 19,05	
	04-				**PZ014**		Ø 19,05	Alu
	04-				**PZ112**		Ø 19,05	
Nova (2105, 2108, 2109) 5/81-								
1.2, SW Eng.BA32101 (44kW)	81-		R		**CF171**		Ø 20,64	
	81-				**PF015**		Ø 19,05	
	81-				**CZ010**		Ø 19,05	Alu
	81-				**CZ102**		Ø 19,05	
	81-				**PZ014**		Ø 19,05	Alu
	81-				**PZ112**		Ø 19,05	
1.3 Eng.BA32105 (48kW)	81-		R		**CF171**		Ø 20,64	
	81-				**PF015**		Ø 19,05	
	81-				**CZ010**		Ø 19,05	Alu
	81-				**CZ102**		Ø 19,05	
	81-				**PZ014**		Ø 19,05	Alu
	81-				**PZ112**		Ø 19,05	
1.5 S Eng.BA32111 (52kW)	89-		R		**CF171**		Ø 20,64	
	89-				**PF015**		Ø 19,05	
	89-				**CZ010**		Ø 19,05	Alu
	89-				**CZ102**		Ø 19,05	
	89-				**PZ014**		Ø 19,05	Alu
	89-				**PZ112**		Ø 19,05	

		Spare Parts	F/R	L/R	FRITECH ref.		DIMENSIONS mm.	NOTE
1.5, SW Eng.BA32103 (55kW)	85-		R		**CF171**		Ø 20,64	
	85-				**PF015**		Ø 19,05	
	85-				**CZ010**		Ø 19,05	Alu
	85-				**CZ102**		Ø 19,05	
	85-				**PZ014**		Ø 19,05	Alu
	85-				**PZ112**		Ø 19,05	
1.6 Eng.BA32106 (56kW)	88-		R		**CF171**		Ø 20,64	
	88-				**PF015**		Ø 19,05	
	88-				**CZ010**		Ø 19,05	Alu
	88-				**CZ102**		Ø 19,05	
	88-				**PZ014**		Ø 19,05	Alu
	88-				**PZ112**		Ø 19,05	
1.7 i Classic, SW (62kW)	94-		R		**CF171**		Ø 20,64	
	94-				**PF015**		Ø 19,05	
	94-				**CZ010**		Ø 19,05	Alu
	94-				**CZ102**		Ø 19,05	
	94-				**PZ014**		Ø 19,05	Alu
	94-				**PZ112**		Ø 19,05	
Riva								
1.2 Eng.1200 (44kW)	83-89		R		**CF171**		Ø 20,64	
	83-89				**PF015**		Ø 19,05	
	82-93				**CZ010**		Ø 19,05	Alu
	82-93				**CZ102**		Ø 19,05	
	82-93				**PZ014**		Ø 19,05	Alu
	82-93				**PZ112**		Ø 19,05	
1.3 (48-52kW)	83-92		R		**CF171**		Ø 20,64	
	83-92				**PF015**		Ø 19,05	
	82-93				**CZ010**		Ø 19,05	Alu
	82-93				**CZ102**		Ø 19,05	
	82-93				**PZ014**		Ø 19,05	Alu
	82-93				**PZ112**		Ø 19,05	
1.5i (51-52-55kW)	84-		R		**CF171**		Ø 20,64	
	84-				**PF015**		Ø 19,05	
	82-93				**CZ010**		Ø 19,05	Alu
	82-93				**CZ102**		Ø 19,05	
	82-93				**PZ014**		Ø 19,05	Alu
	82-93				**PZ112**		Ø 19,05	
1.6 (62kW)	86-92		R		**CF171**		Ø 20,64	
	86-92				**PF015**		Ø 19,05	
	82-93				**CZ010**		Ø 19,05	Alu
	82-93				**CZ102**		Ø 19,05	
	82-93				**PZ014**		Ø 19,05	Alu
	82-93				**PZ112**		Ø 19,05	
Sagona								
1.5 D	95-		R		**CF171**		Ø 20,64	
	95-				**PF024**		Ø 20,64	
1.5i	91-		R		**CF171**		Ø 20,64	
	91-				**PF024**		Ø 20,64	
Samara, Forma (2108, 2109) 1/88-								
1.1 Eng.BA321081 (39kW)	88-		R		**CF171**		Ø 20,64	
	88-				**PF024**		Ø 20,64	
1.3 Eng.2108 (46kW)	88-		R		**CF171**		Ø 20,64	
	88-				**PF024**		Ø 20,64	
1.3 Eng.BA32108 (48kW)	1/86-		R		**CF171**		Ø 20,64	
	1/86-				**PF024**		Ø 20,64	
1.3 Eng.BA32108(KAT) (45kW)	91-		R		**CF171**		Ø 20,64	
	91-				**PF024**		Ø 20,64	
1.5 Eng.BA321083 (53kW)	88-		R		**CF171**		Ø 20,64	
	88-				**PF024**		Ø 20,64	
1.5 Eng.BA321083(KAT) (50kW)	91-		R		**CF171**		Ø 20,64	
	91-				**PF024**		Ø 20,64	
1.5 Eng.BA32111 (52kW)	94-		R		**CF171**		Ø 20,64	
	94-				**PF024**		Ø 20,64	

LADA

		Spare Parts	F/R	L/R	FRITECH ref.		DIMENSIONS mm.	NOTE
Shiguli (2107) 1/70-								
1.6 Eng.1600 (58-59kW)	-76				**PF015**		Ø 19,05	

LANCIA

Beta (828B) 8/73-7/82								
1.3 Eng.828AC.3/ BB.3 (61kW)	76-				**CT003**		Ø 25,40	Alu
1.4 Eng.828A2.000/ B2.000 (66kW)	6/73-				**CT003**		Ø 25,40	Alu
1.6 Eng.132AB/ 828B.000 (74kW)	6/73-				**CT003**		Ø 25,40	Alu
1.8 Eng.828A1.000/ AB/ AC/ AF/ AS (81kW)	6/73-				**CT003**		Ø 25,40	Alu
2.0 Eng.828B1.000 (85-88kW)	76-				**CT003**		Ø 25,40	Alu
Beta Coupe (828BC) 4/76-12/84								
1.3 Eng.828D3.000 (62kW)	81-				**CT003**		Ø 25,40	Alu
1.6 Eng.132AB/ 828B.000 (74kW)	76-				**CT003**		Ø 25,40	Alu
2.0 Eng.828B1.000 (85-88kW)	76-				**CT003**		Ø 25,40	Alu
2.0 i.e. Eng.828B4.000 (90kW)	81-				**CT003**		Ø 25,40	Alu
2.0 Volumex Eng.828B7.000 (99kW)	83-				**CT003**		Ø 25,40	Alu
Beta H.P.E. (828BF) 5/76-9/84								
1.6 Eng.132AB/ 828B.000 (74kW)	80-				**CT003**		Ø 25,40	Alu
2.0 Eng.828B1.000 (85-88kW)	76-				**CT003**		Ø 25,40	Alu
2.0 i.e. Eng.828B4.000 (90kW)	81-				**CT003**		Ø 25,40	Alu
2.0 Volumex Eng.828B7.000 (99kW)	83-				**CT003**		Ø 25,40	Alu
Beta Monte Carlo (137AS, 137BS) 7/80-5/81								
2.0 Eng.134AS.000 (88kW)	80-				**CT003**		Ø 25,40	Alu
Dedra (835) 4/89-7/99								
1.6 16v, SW Eng.182A4.000/ 182B6.000 (76kW)	96-99		R		**CF130**	Bdx	Ø 22,00	+ABS
	96-				**PF042**	Bdx	Ø 22,20	Supplied -Servo
1.6 i.e. Eng.835A1.000/ 835C1.000 (55kW)	7/94-		R		**CF130**	Bdx	Ø 22,00	+ABS
	93-6/94		R		**CF101**		Ø 19,05	
	94-				**PF042**	Bdx	Ø 22,20	Supplied -Servo
	93-94				**PF132**		Ø 20,64	+ABS
	93-94				**PF006**		Ø 20,64	-ABS
1.6 i.e. Eng.835A1.046 (57kW)	7/94-		R		**CF130**	Bdx	Ø 22,00	+ABS
	3/89-6/94		R		**CF101**		Ø 19,05	
	4/89-93				**PF132**		Ø 20,64	+ABS
	3/89-93				**PF006**		Ø 20,64	-ABS
1.6, SW Eng.159B9.000 (66kW)	7/94-		R		**CF130**	Bdx	Ø 22,00	+ABS
	94-				**PF042**	Bdx	Ø 22,20	Supplied -Servo
1.8 16v, SW Eng.183A1.000/ 183A2.000 (83-96kW)	96-				**PF042**	Bdx	Ø 22,20	Supplied -Servo
1.8 i.e. Eng.835C5.000 (66-55kW)	93-				**PF132**		Ø 20,64	+ABS
	93-				**PF006**		Ø 20,64	-ABS
1.8 i.e., SW Eng.835A2.000/ 835A2.046/ 836A5.000 (74-77-80kW)	94-99				**PF042**	Bdx	Ø 22,20	Supplied -Servo
1.9 TDS, SW Eng.160D1.000/ 835A4.000/ .046 (55-66kW)	94-				**PF042**	Bdx	Ø 22,20	Supplied -Servo
	4/89-94				**PF132**		Ø 20,64	+ABS
	91-94				**PF006**		Ø 20,64	-ABS
	10/94-				**PZ034**		Ø 19,05	
2.0 16v, SW, Integrale Eng.836A3.000 (102kW)	94-				**PF042**	Bdx	Ø 22,20	Supplied -Servo
	10/94-				**CZ023**		Ø 25,40	
	10/94-				**PZ034**		Ø 19,05	
2.0 HF Integrale Eng.835A7.046/ 835A8.000 (119-121-124-130kW)	90-				**PF042**	Bdx	Ø 22,20	Supplied -Servo
2.0 i.e. Eng.835A5.000 (86kW)	4/89-92				**PF132**		Ø 20,64	+ABS
	3/89-92				**PF006**		Ø 20,64	-ABS
2.0 i.e. Eng.835A5.046 (83kW)	94-				**PF042**	Bdx	Ø 22,20	Supplied -Servo
	4/89-94				**PF132**		Ø 20,64	+ABS
	3/89-94				**PF006**		Ø 20,64	-ABS
2.0 i.e. T. Eng.835A8.046 (119kW)	91-				**PF042**	Bdx	Ø 22,20	Supplied -Servo
	91-				**PZ060**		Ø 19,05	
2.0 i.e. T. Integrale Eng.835A7.000 (121kW)	90-				**PF042**	Bdx	Ø 22,20	Supplied -Servo
	11/90-				**PZ060**		Ø 19,05	
Delta I (831AB0) 9/79-1/94								
1.1 Eng.831B8.000 (47kW)	-90		R		**CF004**		Ø 19,05	Ch 262992-
	-90				**PF019**		Ø 19,05	Ch 262992-

		Spare Parts	F/R	L/R	FRITECH ref.		DIMENSIONS mm.	NOTE
1.3 Eng.831A1.000/ A2.000/ AB.000 (58kW)	-92		R		**CF004**		Ø 19,05	Ch 262992-
1.3 Eng.831A2.000/ 831B.000 (55kW)	10/79-		R		**CF347**		Ø 17,46	Ch -60274
	11/80-12/86		R		**CF201**		Ø 17,46	Ch 60276-235563
	-92		R		**CF004**		Ø 19,05	Ch 262992-
	-92				**PF019**		Ø 19,05	Ch 262992-
	10/79-				**PF047**		Ø 19,05	Ch -60274
	11/80-12/86				**PF141**		Ø 19,05	Ch 60276-235563
1.5 Eng.138A1.000/ A3.000/ 831A1.000/ B1.000	10/79-		R		**CF347**		Ø 17,46	Ch -60274
(62-63kW)	11/80-12/86		R		**CF201**		Ø 17,46	Ch 60276-235563
	-92		R		**CF004**		Ø 19,05	Ch 262992-
	-92				**PF019**		Ø 19,05	Ch 262992-
	10/79-				**PF047**		Ø 19,05	Ch -60274
	11/80-12/86				**PF141**		Ø 19,05	Ch 60276-235563
1.6 GT Eng.149C2.000/ 831A4.000/ B4.000/ B7.000 (66-77-79-80-97kW)	86-88				**PF019**		Ø 19,05	
1.6 HF T. Eng.831A7.000/ 831B7.046 (96-191kW)	83-86				**PF019**		Ø 19,05	
1.6 HF T. Eng.831B3.000 (103-122kW)	86-88				**PF019**		Ø 19,05	
1.9 TD Eng.831D1.000 (59kW)	-89		R		**CF004**		Ø 19,05	Ch 262992-
	-89				**PF019**		Ø 19,05	Ch 262992-
2.0 16v HF Integrale Eng.831D5.000 (144-147kW)	89-91				**CZ011**		Ø 25,40	
2.0 HF Integrale Eng.831B5.000/ C5.000/ C5.046 (122-130-133-135kW)	86-88				**CZ011**		Ø 25,40	
Delta II (836) 6/93-8/99								
1.4 i.e. Eng.160A1.046/ 836A4.000 (51kW)	09/94-		R		**CF132**	Bdx	Ø 22,00	Vett 3279061-, -ABS
	10/94-99		R		**CF130**	Bdx	Ø 22,00	
	10/94-99				**PF042**	Bdx	Ø 22,20	Supplied -Servo
1.6 16v Eng.182A4.000/ 182B6.000 (76kW)	96-		R		**CF130**	Bdx	Ø 22,00	
	96-				**PF042**	Bdx	Ø 22,20	Supplied -Servo
1.6 i.e. Eng.182A6.000 (66kW)	96-		R		**CF130**	Bdx	Ø 22,00	
	96-				**PF042**	Bdx	Ø 22,20	Supplied -Servo
1.6 i.e. Eng.835A1.000/ 835C1.000 (55kW)	93-96		R		**CF130**	Bdx	Ø 22,00	
	93-96				**PF042**	Bdx	Ø 22,20	Supplied -Servo
1.8 16v GT Eng.183A1.000/ 183A2.000/ 182A2.000	96-				**PF042**	Bdx	Ø 22,20	Supplied -Servo
(83-96kW)	96-				**PZ067**		Ø 19,05	
1.8 i.e. Eng.835C2.000/ C4.000/ 836A6.000/ 836C4.000 (66-76kW)	94-				**PF042**	Bdx	Ø 22,20	Supplied -Servo
1.9 TD Eng.160D1.000/ 835A4.000 (66kW)	94-99		R		**CF132**	Bdx	Ø 22,00	-ABS
	95-99				**PF042**	Bdx	Ø 22,20	Supplied -Servo
2.0 16v Eng.836A3.000 (102kW)	93-				**PF042**	Bdx	Ø 22,20	Supplied -Servo
	93-				**CZ023**		Ø 25,40	
	93-				**PZ034**		Ø 19,05	
2.0 16v T. Eng.175A4.000/ 836A2.000 (137-142kW)	93-99				**PF042**	Bdx	Ø 22,20	Supplied -Servo
	93-99				**CZ024**		Ø 25,40	
	93-99				**PZ067**		Ø 19,05	
Delta III (844) 7/08-12/14								
1.4 16v Eng.198A7.000 (103kW)	10-				**PF847**	Bch	Ø 23,81	Alu
1.4 T-Jet Eng.19854H.000 (110kW)	08-				**PF847**	Bch	Ø 23,81	Alu
1.4 T-Jet Eng.198A4.000 (88kW)	11-				**PF847**	Bch	Ø 23,81	Alu
	11/08-				**PF847**	Bch	Ø 23,81	Alu
1.6 MJT Eng.198A2.000 (88kW)	08-				**PF847**	Bch	Ø 23,81	Alu
1.6 MJT Eng.944A3.000 (77kW)	11-				**PF847**	Bch	Ø 23,81	Alu
1.8 Di Turbo Eng.198A.000 (147kW)	09-				**PF847**	Bch	Ø 23,81	Alu
1.9 MJT Eng.844A1.000 (140kW)	11/08-				**PF847**	Bch	Ø 23,81	Alu
2.0 MJT Eng.198A5.000 (121kW)	11/08-				**PF847**	Bch	Ø 23,81	Alu
Gamma, Coupe 8/81-12/84								
2.5 Eng.830A.000/ 830A4.000 (103kW)	81-				**CT003**		Ø 25,40	Alu
Kappa (838A,B), SW 8/94-10/01								
2.0 16v T., Coupe Eng.838A4.000 (151kW)	-01				**PZ070**	Bch	Ø 19,05	Ch 2081382-
	95-				**PZ037**		Ø 19,05	Ch -2081381
2.0 20v Eng.838A1.000 (107kW)	-01				**PZ070**	Bch	Ø 19,05	Ch 2081382-
	94-				**PZ037**		Ø 19,05	Ch -2081381
2.0 20v T., Coupe Eng.175A3.000 (162kW)	-01				**PZ070**	Bch	Ø 19,05	Ch 2081382-
	98-				**PZ037**		Ø 19,05	Ch -2081381

LANCIA

		Spare Parts	F/R	L/R	FRITECH ref.		DIMENSIONS mm.	NOTE
2.0 20v, Coupe Eng.838A6.000 (114kW)	-01				**PZ070**	Bch	Ø 19,05	Ch 2081382-
	96-				**PZ037**		Ø 19,05	Ch -2081381
2.4 20v, Coupe Eng.838A2.000/ 838A2.027	-01				**PZ070**	Bch	Ø 19,05	Ch 2081382-
(129kW)	94-				**PZ037**		Ø 19,05	Ch -2081381
2.4 JTD Eng.838A8.000 (100kW)	-01				**PZ070**	Bch	Ø 19,05	Ch 2081382-
	98-				**PZ037**		Ø 19,05	Ch -2081381
2.4 TDS Eng.838A3.000/ 838A7.000 (91kW)	-01				**PZ070**	Bch	Ø 19,05	Ch 2081382-
	94-				**PZ037**		Ø 19,05	Ch -2081381
3.0 24v, Coupe Eng.838B.000 (150kW)	-01				**PZ070**	Bch	Ø 19,05	Ch 2081382-
	94-				**PZ037**		Ø 19,05	Ch -2081381
Lybra (839AX,BX), SW 7/99-12/05								
1.6 16v Eng.182A4.000/ 182B6.000 (76kW)	01-				**PF795**	Bch	Ø 20,64	Supplied -Servo, +ABS, -TC
	99-				**PF323**	Bch	Ø 22,20	Alu, +ABS, +VDC
	99-10/00				**PF236**	Bch	Ø 22,20	Alu, +ABS, +TC
	99-01				**PF246**		Ø 20,64	Supplied -Servo, +ABS, -TC
	10/99-				**CZ023**		Ø 25,40	
	99-00				**PZ032**		Ø 19,05	
1.8 16v Eng.839A4.000/ 839A7.000/ 839A9.000	01-				**PF795**	Bch	Ø 20,64	Supplied -Servo, +ABS, -TC
(96kW)	99-				**PF323**	Bch	Ø 22,20	Alu, +ABS, +VDC
	99-10/00				**PF236**	Bch	Ø 22,20	Alu, +ABS, +TC
	99-01				**PF246**		Ø 20,64	Supplied -Servo, +ABS, -TC
	10/99-				**CZ023**		Ø 25,40	
	99-05				**PZ032**		Ø 19,05	
1.9 JTD Eng.AR32302 (77kW)	99-				**PF323**	Bch	Ø 22,20	Alu, +ABS, +VDC
	99-10/00				**PF236**	Bch	Ø 22,20	Alu, +ABS, +TC
	99-				**PF246**		Ø 20,64	Supplied -Servo, +ABS, -TC
	10/99-				**CZ024**		Ø 25,40	
1.9 JTD Eng.AR37101/ 937A2.000 (81-85kW)	00-				**PF323**	Bch	Ø 22,20	Alu, +ABS, +VDC
	-10/00				**PF236**	Bch	Ø 22,20	Alu, +ABS, +TC
	00-				**PF246**		Ø 20,64	Supplied -Servo, +ABS, -TC
	00-01				**CZ023**		Ø 25,40	
	00-01				**PZ032**		Ø 19,05	Only 85kw
2.0 20v Eng.182B7.000 (113kW)	99-				**PF323**	Bch	Ø 22,20	Alu, +ABS, +VDC
	99-10/00				**PF236**	Bch	Ø 22,20	Alu, +ABS, +TC
	99-				**PF261**		Ø 22,20	Supplied -Servo, -TC
	10/99-				**CZ023**		Ø 25,40	
	99-00				**PZ032**		Ø 19,05	
2.0 20v Eng.185A8.000 (110kW)	00-				**PF323**	Bch	Ø 22,20	Alu, +ABS, +VDC
	-10/00				**PF236**	Bch	Ø 22,20	Alu, +ABS, +TC
	00-				**PF261**		Ø 22,20	Supplied -Servo, -TC
	00-				**CZ023**		Ø 25,40	
	00-05				**PZ032**		Ø 19,05	
2.4 20v Blindata Eng.192A2.000 (125kW)	99-				**PF236**	Bch	Ø 22,20	Alu, +ABS, +TC
	99-				**PF323**	Bch	Ø 22,20	Alu, +ABS, +VDC
2.4 JTD Eng.839A5.000/ AR32501 (99kW)	99-10/00				**PF236**	Bch	Ø 22,20	Alu, +ABS, +TC
	99-				**PF261**		Ø 22,20	Supplied -Servo, -TC
	10/99-				**CZ024**		Ø 25,40	
2.4 JTD Eng.839A6.000/ 841C.000 (103-110kW)	00-				**PF323**	Bch	Ø 22,20	Alu, +ABS, +VDC
	-10/00				**PF236**	Bch	Ø 22,20	Alu, +ABS, +TC
	00-				**PF261**		Ø 22,20	Supplied -Servo, -TC
	00-				**CZ024**		Ø 25,40	
Musa I (184) 10/04-11/10								
1.3 D MJT Eng.199B1.000 (70kW)	09-		R		**CF827**	Loc	Ø 20,64	Alu
	09-				**PF845**	Bch	Ø 23,81	Alu, +ABS, +ESP
	09-				**PZ072**	Valeo	Ø 15,87	
1.3 MJT Eng.188A9.000 (51kW)	04-6/05		R		**CF778**	Loc	Ø 22,00	Alu
	7/05-		R		**CF829**	Loc	Ø 22,00	Alu
	1/07-				**PF845**	Bch	Ø 23,81	Alu, +ABS, +ESP
	04-12/06				**PF482**	Bch	Ø 23,81	Alu, +ABS, +VDC
	04-12/06				**PF500**	Bch	Ø 23,81	Alu, +ABS, -VDC
	04-				**PZ071**	Ap	Ø 15,87	
1.3 MJT 16v Eng.199A3.000 (66kW)	7/08-		R		**CF827**	Loc	Ø 20,64	Alu
	08-		R		**CF829**		Ø 22,00	Alu
	7/08-				**PF845**	Bch	Ø 23,81	Alu, +ABS, +ESP

		Spare Parts	F/R	L/R	FRITECH ref.		DIMENSIONS mm.	NOTE
1.3 MJT 16v Eng.199A3.000 (66kW)	08-				**PZ072**	Valeo	Ø 15,87	
1.4 Eng.350A1.000 (57kW)	05-		R		**CF829**	Loc	Ø 22,00	Alu
	05-12/06				**PF482**	Bch	Ø 23,81	Alu, +ABS, +ESP, +VDC, A/T
	1/07-				**PF845**	Bch	Ø 23,81	Alu, +ABS, +ESP
	05-12/06				**PF500**	Bch	Ø 23,81	Alu, +ABS, -VDC
	05-				**PZ071**	Ap	Ø 15,87	
1.4 16v Eng.843A1.000 (70kW)	10/04-6/05		R		**CF778**	Loc	Ø 22,00	Alu
	7/05-		R		**CF829**	Loc	Ø 22,00	Alu
	1/07-				**PF845**	Bch	Ø 23,81	Alu, +ABS, +ESP
	04-12/06				**PF500**	Bch	Ø 23,81	Alu, +ABS, -VDC
	10/04-12/06				**PF482**	Bch	Ø 23,81	Alu, +ABS, +VDC
	04-				**PZ071**	Ap	Ø 15,87	
1.4 16v AUSTRIA Eng.192B2.000 (66kW)	10/04-6/05		R		**CF778**	Loc	Ø 22,00	Alu
	7/05-		R		**CF829**	Loc	Ø 22,00	Alu
	1/07-				**PF845**	Bch	Ø 23,81	Alu, +ABS, +ESP
	04-12/06				**PF500**	Bch	Ø 23,81	Alu, +ABS, -VDC
	10/04-12/06				**PF482**	Bch	Ø 23,81	Alu, +ABS, +VDC
	04-				**PZ071**	Ap	Ø 15,87	
1.6 MJT Eng.350A2.000 (85kW)	08-				**PZ071**	Ap	Ø 15,87	
1.6 MJT Eng.350A2.000 (88kW)	7/08-				**PF845**	Bch	Ø 23,81	Alu, +ABS, +ESP
	08-				**PZ071**	Ap	Ø 15,87	
1.9 Multijet Eng.188B2.000 (74kW)	10/04-7/05		R		**CF090**	Loc	Ø 20,64	
	7/05-		R		**CF827**	Loc	Ø 20,64	Alu
	1/07-				**PF845**	Bch	Ø 23,81	Alu, +ABS, +ESP
	04-12/06				**PF500**	Bch	Ø 23,81	Alu, +ABS, -VDC
	10/04-12/06				**PF482**	Bch	Ø 23,81	Alu, +ABS, +VDC
	04-10				**PZ072**	Valeo	Ø 15,87	
Musa II 12/10-6/13								
1.3 MJT 16v Eng.188A9.000 (51kW)	10-		R		**CF829**		Ø 22,00	Alu
	10-				**PF482**	Bch	Ø 23,81	Alu, +DSC
	10-				**PF845**	Bch	Ø 23,81	Alu, -DSC
	10-				**PZ071**	Ap	Ø 15,87	
1.3 MJT 16v Eng.199A3.000 (66kW)	10-		R		**CF829**		Ø 22,00	Alu
	10-				**PF482**	Bch	Ø 23,81	Alu, +DSC
	10-				**PF845**	Bch	Ø 23,81	Alu, -DSC
	10-				**PZ072**	Valeo	Ø 15,87	
1.4 Eng.350A1.000 (57kW)	10-		R		**CF829**	Loc	Ø 22,00	Alu
1.4 16v Eng.843A1.000 (70kW)	10-		R		**CF829**	Loc	Ø 22,00	Alu
	10-				**PF845**	Bch	Ø 23,81	Alu, +ABS, +ESP
	10-				**PZ071**	Ap	Ø 15,87	
1.4 GPL Eng.350A1.000 (57kW)	10-		R		**CF829**	Loc	Ø 22,00	Alu
	10-				**PF845**	Bch	Ø 23,81	Alu, +ABS, +ESP
1.6 MJT 16v Eng.350A2.000 (88kW)	10-				**PF845**	Bch	Ø 23,81	Alu, +ABS, +ESP
Phedra (179) 9/02-12/10								
2.0 16v Eng.RFN(EW10J4) (100kW)	02-				**CZ103**	Fte	Ø 19,05	Pla
	9/02-				**PZ130**	Fte	Ø 19,05	Alu
2.0 JTD Eng.RHM(DW10ATED4-FAP) (79kW)	7/03-				**PZ130**	Fte	Ø 19,05	Alu
2.0 JTD Eng.RHW(DW10ATED4) (80kW)	9/02-				**PZ130**	Fte	Ø 19,05	Alu
2.0 MJT 16v Eng.RHK(DW10UTED4) (88kW)	6/06-				**PZ130**	Fte	Ø 19,05	Alu
2.2 JTD Eng.4HW(DW12ATED4) (94kW)	9/02-				**PZ130**	Fte	Ø 19,05	Alu
Prisma (831AB0) 12/82-2/92								
1.3 Eng.831A1.000/ A2.000/ AB.000 (58kW)	1/83-		R		**CF201**		Ø 17,46	Ch -3032272
	-86		R		**CF004**		Ø 19,05	Ch 3032273-
	1/83-86				**PF019**		Ø 19,05	
1.6 GT Eng.149C2.000/ 831A4.000/ B4.000/ B7.000	82-		R		**CF201**		Ø 17,46	Ch -3032272
(66-77-79-80-97kW)	-86		R		**CF004**		Ø 19,05	Ch 3032273-
	82-86				**PF019**		Ø 19,05	
1.9 D Eng.831D.000 (48kW)	1/83-		R		**CF201**		Ø 17,46	Ch -3032272
			R		**CF004**		Ø 19,05	Ch 3032273-
	1/83-				**PF019**		Ø 19,05	
Thema (834) 11/84-4/97								
2.0 16v T., SW Eng.834C.146 (110kW)	86-				**PF091**		Ø 22,20	Alu
	86-				**CZ011**		Ø 25,40	
	86-				**PZ015**		Ø 19,05	

LANCIA

		Spare Parts	F/R	L/R	FRITECH ref.		DIMENSIONS mm.	NOTE
2.0 16v T., SW Eng.834C1.000 (133kW)	88-				**PF091**		Ø 22,20	Alu
	88-				**CZ011**		Ø 25,40	
	88-				**PZ015**		Ø 19,05	
2.0 16v T., SW Eng.834C1.246 (130kW)	89-				**CZ011**		Ø 25,40	
	89-				**PZ015**		Ø 19,05	
2.0 16v T., SW Eng.834F1.000/ 834F2.000	92-				**PF091**		Ø 22,20	Alu
(148-133-147-112-104kW)	92-				**CZ011**		Ø 25,40	
	92-				**PZ015**		Ø 19,05	
2.0 i.e Eng.834B.000/ 834B1.000 (83-86-88kW)	88-				**PF091**		Ø 22,20	Alu
	88-				**CZ011**		Ø 25,40	
	88-				**PZ015**		Ø 19,05	
2.0 i.e. Eng.834B.048 (83kW)	86-				**PF091**		Ø 22,20	Alu
	86-				**CZ011**		Ø 25,40	
	86-				**PZ015**		Ø 19,05	
2.0 i.e. Eng.834B.146 (85kW)	87-				**PF091**		Ø 22,20	Alu
	87-				**CZ011**		Ø 25,40	
	87-				**PZ015**		Ø 19,05	
2.0 i.e. 16v, SW Eng.834B2.000 (108kW)	88-				**PF091**		Ø 22,20	Alu
	88-				**CZ011**		Ø 25,40	
	88-				**PZ015**		Ø 19,05	
2.0 i.e. 16v, SW Eng.834B2.246 (104kW)	89-				**PF091**		Ø 22,20	Alu
	89-				**CZ011**		Ø 25,40	
	89-				**PZ015**		Ø 19,05	
2.0 i.e. T. Eng.834C.000/ M601.AT200 (122-133kW)	84-				**CZ011**		Ø 25,40	
	84-				**PZ015**		Ø 19,05	
2.5 TDS, SW Eng.8144.91 (74kW)	84-				**PF091**		Ø 22,20	Alu
	84-				**CZ011**		Ø 25,40	
	84-				**PZ015**		Ø 19,05	
2.5 TDS, SW Eng.8144.97S (77kW)	88-				**PF091**		Ø 22,20	Alu
	88-				**CZ011**		Ø 25,40	
	88-				**PZ015**		Ø 19,05	
2.5 TDS, SW Eng.8144.97Y (85kW)	88-				**PF091**		Ø 22,20	Alu
	88-				**CZ011**		Ø 25,40	
	88-				**PZ015**		Ø 19,05	
2.8 V6 i.e. Eng.834E.000 (110kW)	84-				**PF091**		Ø 22,20	Alu
	84-				**CZ011**		Ø 25,40	
	84-				**PZ015**		Ø 19,05	
2.8 V6 i.e. Eng.834E.146 (108kW)	88-				**PF091**		Ø 22,20	Alu
	88-				**CZ011**		Ø 25,40	
	88-				**PZ015**		Ø 19,05	
3.0 8.32 Eng.F105L.046 (151-158kW)	87-				**PF091**		Ø 22,20	Alu
	87-				**CZ011**		Ø 25,40	
	87-				**PZ015**		Ø 19,05	
3.0 V6, SW Eng.834F.000 (126kW)	92-				**PF091**		Ø 22,20	Alu
	92-				**CZ011**		Ø 25,40	
	92-				**PZ015**		Ø 19,05	
Trevi (828DB) 5/80-1/87								
1.6 Eng.828B.000 (74kW)	1/80-				**CT003**		Ø 25,40	Alu
2.0 i.e. Eng.828B4.000 (90kW)	1/80-				**CT003**		Ø 25,40	Alu
2.0 Volumex Eng.828B7.000 (99kW)	1/80-				**CT003**		Ø 25,40	Alu
Y (840A) 11/95-10/03								
1.1 Eng.176B2.000 (40kW)	95-		R		**CF067**	Bdx	Ø 20,64	+ABS
	95-		R		**CF090**	Loc	Ø 20,64	
	11/01-03				**PF592**	Bch	Ø 20,64	+ABS
	95-11/01				**PF006**		Ø 20,64	+ABS
1.2 Eng.840A3.000/ 188A4.000 (44kW)	96-		R		**CF067**	Bdx	Ø 20,64	+ABS
	96-		R		**CF090**	Loc	Ø 20,64	
	11/01-03				**PF592**	Bch	Ø 20,64	+ABS
	96-11/01				**PF006**		Ø 20,64	+ABS
1.2 16v Eng.176B9.000 (63kW)	97-00		R		**CF067**	Bdx	Ø 20,64	+ABS
	97-00		R		**CF090**	Loc	Ø 20,64	-ABS
	97-00				**PF006**		Ø 20,64	+ABS
1.2 16v Eng.188A5.000 (59kW)	00-		R		**CF067**	Bdx	Ø 20,64	+ABS
	00-		R		**CF090**	Loc	Ø 20,64	

		Spare Parts	F/R	L/R	FRITECH ref.		DIMENSIONS mm.	NOTE
1.2 16v Eng.188A5.000 (59kW)	11/01-03				**PF592**	Bch	Ø 20,64	+ABS
	00-11/01				**PF006**		Ø 20,64	+ABS
1.4 12v Eng.840A2.000 (59kW)	96-03		R		**CF067**	Bdx	Ø 20,64	+ABS
	96-03		R		**CF090**	Loc	Ø 20,64	-ABS
	11/01-03				**PF592**	Bch	Ø 20,64	+ABS
	96-11/01				**PF006**		Ø 20,64	+ABS
1.4 12v Eng.840A4.000 (55kW)	96-		R		**CF067**	Bdx	Ø 20,64	+ABS
	96-		R		**CF090**	Loc	Ø 20,64	-ABS
	11/01-03				**PF592**	Bch	Ø 20,64	+ABS
	96-11/01				**PF006**		Ø 20,64	+ABS
Y10 (156) 3/85-12/95								
1.0 Fire Eng.156A.000 (41kW)	85-		R		**CF004**		Ø 19,05	
	85-				**PF009**	Loc	Ø 20,64	
	85-				**CT006**	Bdx/Ate	Ø 25,40	Alu
1.0 Fire Eng.156A2.000 (33kW)	85-89				**PF009**	Loc	Ø 20,64	
1.0 Fire Eng.156A2.100 (32kW)	85-		R		**CF004**		Ø 19,05	
	85-				**PF009**	Loc	Ø 20,64	
	85-				**CT006**	Bdx/Ate	Ø 25,40	Alu
1.0 Fire, 4WD Eng.146A2.166 (37kW)	87-		R		**CF004**		Ø 19,05	
	92-				**PF185**	Bdx	Ø 20,64	
	87-92				**PF009**	Loc	Ø 20,64	
	85-92				**CT006**	Bdx/Ate	Ø 25,40	Alu
1.0 Fire, 4WD Eng.156A2.246 (33kW)	87-		R		**CF004**		Ø 19,05	
	92-				**PF185**	Bdx	Ø 20,64	
	87-92				**PF009**	Loc	Ø 20,64	
	87-92				**CT006**	Bdx/Ate	Ø 25,40	Alu
1.0 T. Eng.156A1.000 (62kW)	85-		R		**CF004**		Ø 19,05	
	85-				**PF009**	Loc	Ø 20,64	
	85-				**CT006**	Bdx/Ate	Ø 25,40	Alu
1.1 Avenue, 4WD Eng.176B2.000 (40kW)	95-		R		**CF004**		Ø 19,05	
	95-				**PF185**	Bdx	Ø 20,64	
	95-				**CT006**	Bdx/Ate	Ø 25,40	Alu
1.1 i.e, 4WD Eng.156C.000 (42kW)	89-92		R		**CF004**		Ø 19,05	
	89-92				**PF185**	Bdx	Ø 20,64	
	89-92				**PF009**	Loc	Ø 20,64	
	89-92				**CT006**	Bdx/Ate	Ø 25,40	Alu
1.1 i.e. Fire, 4WD Eng.156C.046 (37kW)	89-		R		**CF004**		Ø 19,05	
	89-				**PF185**	Bdx	Ø 20,64	
	89-				**PF009**	Loc	Ø 20,64	
	89-				**CT006**	Bdx/Ate	Ø 25,40	Alu
1.3 i.e. Fire Eng.146A5.046 (53kW)	87-		R		**CF004**		Ø 19,05	
	87-				**PF185**	Bdx	Ø 20,64	
	87-				**PF009**	Loc	Ø 20,64	
	87-				**CT006**	Bdx/Ate	Ø 25,40	Alu
1.3 i.e. Fire Eng.156B.000 (53kW)	87-		R		**CF004**		Ø 19,05	
	87-				**PF185**	Bdx	Ø 20,64	
	87-				**PF009**	Loc	Ø 20,64	
	87-				**CT006**	Bdx/Ate	Ø 25,40	Alu
Ypsilon I (843) 10/03-12/13								
1.2 Eng.169A4/ A5.000 (51kW)	10-		R		**CF808**	Bch	Ø 19,05	Alu
	10-11				**PF965**	Bch	Ø 20,64	Alu
	10-				**PZ071**	Ap	Ø 15,87	
1.2 16v Eng.188A5.000 (59kW)	8/03-		R		**CF777**	Bch	Ø 20,64	Alu
	03-				**PF542**	Bch	Ø 22,20	Alu, +ABS, +VDC
	8/03-				**PF540**	Bch	Ø 22,20	Alu, +ABS, -VDC
	03-				**PZ072**	Valeo	Ø 15,87	
1.2 8v Eng.188A4.000 (44kW)	03-		R		**CF808**	Bch	Ø 19,05	Alu
	8/03-				**PF539**	Bch	Ø 20,64	Alu, +Differential lock, +ABS
	03-				**PF965**	Bch	Ø 20,64	Alu
	03-				**PZ071**	Ap	Ø 15,87	
1.3 MJT Eng.188A9.000 (51kW)	8/03-		R		**CF777**	Bch	Ø 20,64	Alu
	03-				**PF542**	Bch	Ø 22,20	Alu, +ABS, +VDC
	8/03-				**PF540**	Bch	Ø 22,20	Alu, +ABS, -VDC
	03-				**PZ072**	Valeo	Ø 15,87	

LANCIA

		Spare Parts	F/R	L/R	FRITECH ref.		DIMENSIONS mm.	NOTE
1.3 MJT Eng.199A2.000 (55kW)	06-		R		**CF777**	Bch	Ø 20,64	Alu
	06-				**PF540**	Bch	Ø 22,20	Alu, +ABS, -VDC, A/T
	06-				**PF542**	Bch	Ø 22,20	Alu, +ABS, +VDC
	06-				**PZ072**	Valeo	Ø 15,87	
1.3 MJT 16v Eng.199A3.000 (66kW)	06-		R		**CF777**	Bch	Ø 20,64	Alu
	06-				**PZ072**	Valeo	Ø 15,87	
1.3 MJT, Momo Design Eng.843A2.000 (77kW)	08-		R		**CF777**	Bch	Ø 20,64	Alu
	08-13				**PF542**	Bch	Ø 22,20	Alu, +ESP
	08-13				**PF540**	Bch	Ø 22,20	Alu, -ESP
	08-				**PZ072**	Valeo	Ø 15,87	
1.4 Eng.350A1.000 (57kW)	06-		R		**CF808**	Bch	Ø 19,05	Alu
	06-				**PF540**	Bch	Ø 22,20	Alu, +ABS, -VDC
	06-				**PF542**	Bch	Ø 22,20	Alu, +ABS, +VDC
	06-				**PZ071**	Ap	Ø 15,87	
1.4 16v, Momo Design Eng.843A1.000 (70kW)	8/03-		R		**CF777**	Bch	Ø 20,64	Alu
	03-				**PF542**	Bch	Ø 22,20	Alu, +ABS, +VDC
	8/03-				**PF540**	Bch	Ø 22,20	Alu, +ABS, -VDC
	03-				**PZ072**	Valeo	Ø 15,87	
1.4 LPG Eng.350A1.000 (57kW)	10-				**PF540**	Bch	Ø 22,20	Alu, +ABS, -VDC
	10-				**PF542**	Bch	Ø 22,20	Alu, +ABS, +VDC
	10-				**PZ071**	Ap	Ø 15,87	
Ypsilon II (846) 6/11-								
0.9 Twinair Eng.312A2.000 (63kW)	11-		R		**CF827**	Loc	Ø 20,64	Alu
0.9 Twinair Met. Eng.312A2.000 (63kW)	13-		R		**CF827**	Loc	Ø 20,64	Alu
0.9 Twinair Met. (59kW)	14-		R		**CF827**	Loc	Ø 20,64	Alu
1.2 Eng.169A4.000 (51kW)	11-		R		**CF827**	Loc	Ø 20,64	Alu
1.2 GPL Eng.169A4.000 (49-51kW)	11-		R		**CF827**	Loc	Ø 20,64	Alu
	11-				**PZ071**	Ap	Ø 15,87	
1.3 MJT Eng.199B1.000 (70kW)	11-		R		**CF827**	Loc	Ø 20,64	Alu
Zeta (220) 5/95-9/02								
2.0 16v Eng.RFN(EW10J4) (100kW)	00-02		R		**CF094**		Ø 19,05	-ABS
	00-02				**PF464**	Bch	Ø 23,81	+ABS
	00-02				**PF429**	Bch	Ø 23,81	-ABS
2.0 16v Eng.RFV(XU10J4R) (97kW)	98-00		R		**CF094**		Ø 19,05	-ABS
	5/99-00				**PF464**	Bch	Ø 23,81	+ABS
	5/99-00				**PF429**	Bch	Ø 23,81	-ABS
	98-5/99				**PF217**		Ø 23,81	
2.0 JTD, 16v Eng.RHW/ RHZ(DW10ATED/ 4)	99-02		R		**CF094**		Ø 19,05	-ABS
(80kW)	99-02				**PF464**	Bch	Ø 23,81	+ABS
	99-02				**PF429**	Bch	Ø 23,81	-ABS
	9/99-9/02				**PZ130**	Fte	Ø 19,05	Alu
2.0 T. Eng.RGX(XU10J2CTE) (108kW)	95-02		R		**CF094**		Ø 19,05	-ABS
	5/99-02				**PF464**	Bch	Ø 23,81	+ABS
	5/99-02				**PF429**	Bch	Ø 23,81	-ABS
	95-5/99				**PF217**		Ø 23,81	
2.1 TD Eng.P8C (80kW)	96-99		R		**CF094**		Ø 19,05	-ABS
	5/99-9/99				**PF464**	Bch	Ø 23,81	+ABS
	5/99-9/99				**PF429**	Bch	Ø 23,81	-ABS
	96-5/99				**PF217**		Ø 23,81	+ABS

LAND ROVER

109 9/63-12/86								
2.3 Eng.11H (51kW)	71-84		F	L	**CF279**	Luc	Ø 28,60	
	71-84		F	R	**CF280**	Luc	Ø 28,60	
	71-84		R	L	**CF278**	Luc	Ø 31,75	
	71-84		R	R	**CF277**	Luc	Ø 31,75	
2.3 D Eng.10J (46kW)	71-84		F	L	**CF279**	Luc	Ø 28,60	
	71-84		F	R	**CF280**	Luc	Ø 28,60	
	71-84		R	L	**CF278**	Luc	Ø 31,75	
	71-84		R	R	**CF277**	Luc	Ø 31,75	
2.6 Eng.941 (63kW)	71-9/71		R	L	**CF278**	Luc	Ø 31,75	
	71-9/71		R	R	**CF277**	Luc	Ø 31,75	
2.6 D Eng.10J (45kW)	67-71		R	L	**CF278**	Luc	Ø 31,75	
	67-71		R	R	**CF277**	Luc	Ø 31,75	

		Spare Parts	F/R	L/R	FRITECH ref.		DIMENSIONS mm.	NOTE
3.5 Eng.10G (68kW)	80-83		R	L	**CF278**	Luc	Ø 31,75	
	80-83		R	R	**CF277**	Luc	Ø 31,75	
110 9/83-7/90								
2.25 (55kW)	83-85		R	L	**CF296**	Luc	Ø 26,99	
	83-85		R	R	**CF295**	Luc	Ø 26,99	
2.3 D 4WD Eng.10J (44-46kW)	83-84		R	L	**CF296**	Luc	Ø 26,99	
	83-84		R	R	**CF295**	Luc	Ø 26,99	
2.5 Eng.17H (62kW)	86-90		R	L	**CF296**	Luc	Ø 26,99	
	86-90		R	R	**CF295**	Luc	Ø 26,99	
2.5 D Eng.12J (49kW)	84-90		R	L	**CF296**	Luc	Ø 26,99	
	84-90		R	R	**CF295**	Luc	Ø 26,99	
2.5 TD Eng.19J (63kW)	87-90		R	L	**CF296**	Luc	Ø 26,99	
	87-90		R	R	**CF295**	Luc	Ø 26,99	
3.5 V8 Eng.24G (100kW)	83-90		R	L	**CF296**	Luc	Ø 26,99	
	83-90		R	R	**CF295**	Luc	Ø 26,99	
88 9/63-12/86								
2.3 D Eng.10J (46kW)	83-84		F	L	**CF279**	Luc	Ø 28,60	
	1/71-82		F	L	**CF278**	Luc	Ø 31,75	
	83-84		F	R	**CF280**	Luc	Ø 28,60	
	1/71-82		F	R	**CF277**	Luc	Ø 31,75	
	1/71-84		R	L	**CF430**	Luc	Ø 25,40	
	1/71-84		R	R	**CF429**	Luc	Ø 25,40	
2.3, 4WD Eng.11H (51kW)	83-84		F	L	**CF279**	Luc	Ø 28,60	
	1/71-82		F	L	**CF278**	Luc	Ø 31,75	
	83-84		F	R	**CF280**	Luc	Ø 28,60	
	1/71-82		F	R	**CF277**	Luc	Ø 31,75	
	1/71-84		R	L	**CF430**	Luc	Ø 25,40	
	1/71-84		R	R	**CF429**	Luc	Ø 25,40	
90 9/83-7/90								
2.5 Eng.17H (62kW)	84-90		R	L	**CF294**	Luc	Ø 22,20	
	84-90		R	R	**CF485**	Luc	Ø 22,20	
2.5 D Eng.12J (49kW)	86-90		R	L	**CF294**	Luc	Ø 22,20	
	86-90		R	R	**CF485**	Luc	Ø 22,20	
2.5 TD Eng.19J (63kW)	86-90		R	L	**CF294**	Luc	Ø 22,20	
	86-90		R	R	**CF485**	Luc	Ø 22,20	
Defender I (LD) 110 9/90-4/07								
2.5 Eng.17H (60kW)	90-92		R	L	**CF296**	Luc	Ø 26,99	
	90-92		R	R	**CF295**	Luc	Ø 26,99	
2.5 D Eng.12J (49kW)	90-93		R	L	**CF296**	Luc	Ø 26,99	
	90-93		R	R	**CF295**	Luc	Ø 26,99	
2.5 TDi, SW Eng.11L/ 16L (83kW)	94-		R	L	**CF296**	Luc	Ø 26,99	
	90-94		R	L	**CF978**		Ø 25,40	
	94-		R	R	**CF295**	Luc	Ø 26,99	
	90-94		R	R	**CF977**		Ø 25,40	
3.5 Eng.24G (98kW)	1/90-12/90		R	L	**CF294**	Luc	Ø 22,20	
	1/90-12/90		R	R	**CF485**	Luc	Ø 22,20	
Defender I (LD) 130 9/90-4/07								
2.5 TDi, SW Eng.11L/ 16L (83kW)	94-		R	L	**CF296**	Luc	Ø 26,99	
	90-94		R	L	**CF978**		Ø 25,40	
	94-		R	R	**CF295**	Luc	Ø 26,99	
	90-94		R	R	**CF977**		Ø 25,40	
Defender I (LD) 90 9/90-4/07								
2.5 Eng.17H (60kW)	1/90-12/90		R	L	**CF294**	Luc	Ø 22,20	
	1/90-12/90		R	R	**CF485**	Luc	Ø 22,20	
2.5 D Eng.12J (49kW)	1/90-12/90		R	L	**CF294**	Luc	Ø 22,20	
	1/90-12/90		R	R	**CF485**	Luc	Ø 22,20	
2.5 TDi, SW Eng.11L/ 16L (83kW)	90-94		R	L	**CF978**		Ø 25,40	
	90-94		R	R	**CF977**		Ø 25,40	
3.5 Eng.24G (98kW)	1/90-12/90		R	L	**CF294**	Luc	Ø 22,20	
	1/90-12/90		R	R	**CF485**	Luc	Ø 22,20	
Discovery II (LJ, LT) 6/94-9/04								
2.5 TD5 Eng.10P/ 15P/ 16P (102kW)	99-04				**CZ119**	Ap	Ø 22,20	

LAND ROVER

		Spare Parts	F/R	L/R	FRITECH ref.		DIMENSIONS mm.	NOTE
Freelander I (LN) 2/98-2/06								
1.8 16v Eng.18K16HOL/ HOU/ 18K4F (86kW)	00-		R		**CF811**		Ø 19,05	Alu
1.8 16v, SoftTop Eng.18K16 (88kW)	98-		R		**CF085**	Luc	Ø 20,64	
2.0 Di, Soft Top Eng.20T2N (72kW)	98-		R		**CF085**	Luc	Ø 20,64	
2.0 TD4 Eng.TD4/ M47R (80-82kW)	00-		R		**CF811**		Ø 19,05	Alu
2.5 V6 Eng.25K4F (130kW)	00-		R		**CF811**		Ø 19,05	Alu

LDV

Convoy 1/96-12/06								
2.5 D Eng.EN55 (56kW)	96-		R		**CF209**		Ø 15,87	13 Q
	96-		R		**CF163**		Ø 17,46	15-16Q
2.5 TD Eng.ET70 (74kW)	96-		R		**CF209**		Ø 15,87	13 Q
	96-		R		**CF163**		Ø 17,46	15-16Q
3.5 V8	96-		R		**CF209**		Ø 15,87	13 Q
	96-		R		**CF163**		Ø 17,46	15-16Q

LEXUS

IS II (XE2) 10/05-6/13								
250, Coupe, Cabrio Eng.4GRFSE (153kW)	05-				**PF958**	Advics	Ø 22,20	Alu

LINCOLN

Continental								
All models	70-73		R	L	**CF609**		Ø 23,81	
	70-73		R	R	**CF610**		Ø 23,81	
	80-81		R		**CF936**		Ø 25,40	
Mark III, IV, V, VI, VII, VIII								
All models	69-71		R	L	**CF609**		Ø 23,81	
	72-74		R	L	**CF747**		Ø 25,40	
	69-71		R	R	**CF610**		Ø 23,81	
	72-74		R	R	**CF748**		Ø 25,40	
	80-83		R		**CF936**		Ø 25,40	
Town Car								
All models	82-91		R		**CF936**		Ø 25,40	

LOTUS

Europa I 10/66-4/76								
1.5 (57kW)	66-70		R		**CF417**		Ø 17,78	Alu, Special
	66-70		R		**CF335**		Ø 19,05	Alu, S1, S2
1.6 (78kW)	71-73		R		**CF417**		Ø 17,78	Alu, Super Seven
	71-75		R		**CF335**		Ø 19,05	Alu, S2 Twin Cam
Europa II 8/76-1/83								
1.5 (57kW)	8/76-83		R		**CF163**		Ø 17,46	serie A, AC406, AO407

MARCOS

1800 1/64-12/70								
1.8 GT	64-66		R		**CF261**		Ø 17,78	Alu

MATRA

Ranch								
All models	77-79		R		**CF027**	Bdx	Ø 20,64	
	80-84		R		**CF020**	Bdx	Ø 22,00	
	77-79		R		**CF030**	Luc	Ø 20,64	
	80-84		R		**CF036**	Luc	Ø 22,00	

MAZDA

1000 1/75-1/77								
1.0 Eng.PC (33kW)	75-77		R		**CF410**		Ø 19,05	Front Drum Brake
121 I (DA) 10/87-10/90								
1.1 Eng.B1/ B116 (42kW)	87-90		R		**CF302**		Ø 15,87	
1.3 Eng.B3 (40-44-48kW)	87-90		R		**CF302**		Ø 15,87	
121 II (DB) 11/90-3/96								
1.3 Eng.B3 (39kW)	91-95		R		**CF302**		Ø 15,87	
1.3 16v Eng.B3(16v) (40-53-54kW)	91-95		R		**CF302**		Ø 15,87	

		Spare Parts	F/R	L/R	FRITECH ref.		DIMENSIONS mm.	NOTE
121 III (JASM, JBSM) 3/96-10/02								
1.25 Eng.DHF/ DHG (55kW)	96-		R		**CF786**		Ø 17,78	M/T
	96-		R		**CF721**		Ø 19,05	h. 36mm (body), A/T
1.3 Eng.J4C (37-44kW)	96-		R		**CF786**		Ø 17,78	M/T
	96-		R		**CF721**		Ø 19,05	h. 36mm (body), A/T
1.8 D Eng.RTK/ RTJ (44kW)	96-		R		**CF786**		Ø 17,78	M/T
	96-		R		**CF721**		Ø 19,05	h. 36mm (body), A/T
1300 1/75-1/77								
1.3 Eng.TC (44kW)	75-77		R		**CF361**		Ø 17,46	Front Drum Brake
2 I (DY) 4/03-7/07								
1.25 Eng.FUJA (55kW)	03-07		R		**CF552**	Loc	Ø 19,05	Alu
	03-07				**PF528**	Ate	Ø 23,81	Alu, +ABS
	4/03-09/07				**PF693**	Ate	Ø 23,81	Alu, +ESP
1.4 Eng.FXJA (59kW)	03-07		R		**CF552**	Loc	Ø 19,05	Alu
	03-07				**PF528**	Ate	Ø 23,81	Alu, +ABS
	4/03-09/07				**PF693**	Ate	Ø 23,81	Alu, +ESP
1.4 TD Eng.F6JA/ F6JB (50kW)	4/03-		R		**CF552**	Loc	Ø 19,05	Alu
	4/03-				**PF528**	Ate	Ø 23,81	Alu, +ABS
	4/03-09/07				**PF693**	Ate	Ø 23,81	Alu, +ESP
1.6 Eng.FYJA (74kW)	03-		R		**CF552**	Loc	Ø 19,05	Alu
	4/03-				**PF528**	Ate	Ø 23,81	Alu, +ABS
	4/03-09/07				**PF693**	Ate	Ø 23,81	Alu, +ESP
2 II (DE) 8/07-12/14								
1.3 16v Eng.ZJ06 (55kW)	07-		R		**CF572**		Ø 19,05	
1.3 16v Eng.ZJ07 (63kW)	07-		R		**CF572**		Ø 19,05	
1.4 TD Eng.Y404 (50kW)	08-		R		**CF572**		Ø 19,05	
1.5 16v Eng.ZY05/ ZYDE (76kW)	07-		R		**CF572**		Ø 19,05	
1.6 TD Eng.Y401 (66kW)	09-		R		**CF572**		Ø 19,05	
1.6 TD Eng.Y660 (70kW)	12-		R		**CF572**		Ø 19,05	
2 III (DL, DJ) 11/14-								
1.5 Eng.P5Y8/ Y5/ Y7 (55kW)	15-		R		**CF572**		Ø 19,05	
1.5 Eng.P5Y8/ Y5/ Y7 (66kW)	15-		R		**CF572**		Ø 19,05	
1.5 D Eng.S5Y5 (77kW)	15-		R		**CF572**		Ø 19,05	
1.5 D 4WD Eng.S5-DPTR (77kW)	14-		R		**CF572**		Ø 19,05	
3 I (BK) 10/03-4/09								
1.3 Eng.ZJ (62kW)	03-				**PF801**	Ate	Ø 25,40	Alu
1.4 Eng.FXJA (59kW)	04-				**PF801**	Ate	Ø 25,40	Alu
1.6 Eng.Z6 (77kW)	03-				**PF801**	Ate	Ø 25,40	Alu
1.6 Di T. Eng.Y601 (80kW)	04-				**PF801**	Ate	Ø 25,40	Alu
1.6 TD 16v Eng.Y603 (66kW)	06-09				**PF801**	Ate	Ø 25,40	Alu
2.0 Eng.LF50 (110kW)	03-				**PF801**	Ate	Ø 25,40	Alu
2.0 TD Eng.RF7J (105kW)	07-				**PF801**	Ate	Ø 25,40	Alu
2.3 16v MPS Eng.L3N9 (191kW)	12/06-				**PZ118**		Ø 19,05	Pla
3 II (BL) 5/09-9/13								
1.6 MZ-CD Eng.Y6 (85kW)	10-				**PF801**	Ate	Ø 25,40	Alu
1.6 MZ-CD Eng.Y642 (80kW)	09-				**PF801**	Ate	Ø 25,40	Alu
1.6 MZR Eng.Z668 (77kW)	09-				**PF801**	Ate	Ø 25,40	Alu
2.0 MZR Eng.LF5W (111kW)	09-				**PF801**	Ate	Ø 25,40	Alu
2.0 MZR Eng.LFZ2 (110kW)	09-				**PF801**	Ate	Ø 25,40	Alu
2.2 MZ-CD Eng.R2AA (110kW)	09-				**PF801**	Ate	Ø 25,40	Alu
2.2 MZ-CD Eng.R2AA (136kW)	09-				**PF801**	Ate	Ø 25,40	Alu
2.3 MZR Eng.L3Y7 (191kW)	09-				**PF954**	Ate	Ø 25,40	Alu
323 I (FA), SW 1/77-5/86								
1.0 (Exc. SW) Eng.PC (33kW)	77-80		R	L	**CF740**		Ø 19,05	Alu, Exc. Sweden
	77-80		R	R	**CF600**		Ø 19,05	Alu, Exc. Sweden
	77-80		R		**CF361**		Ø 17,46	Front Drum Brake, Exc. Europe
	77-80		R		**CF618**		Ø 19,05	Sweden
1.3 Eng.TC (44kW)	77-86		R	L	**CF740**		Ø 19,05	Alu, Exc. Sweden
	77-86		R	R	**CF600**		Ø 19,05	Alu, Exc. Sweden
	77-86		R		**CF598**		Ø 15,87	Alu, Front Disc Brake, Exc. Europe
	77-86		R		**CF618**		Ø 19,05	Sweden
1.4 Eng.UC (51kW)	78-82		R	L	**CF740**		Ø 19,05	Alu, Exc. Sweden
	78-82		R	R	**CF600**		Ø 19,05	Alu, Exc. Sweden
	78-82		R		**CF598**		Ø 15,87	Alu, Front Disc Brake, Exc. Europe

MAZDA

		Spare Parts	F/R	L/R	FRITECH ref.		DIMENSIONS mm.	NOTE
1.4 Eng.UC (51kW)	78-82		R		**CF618**		Ø 19,05	Sweden
323 II (BD) 9/80-10/89								
1.1 Eng.E1 (40kW)	81-85		R	L	**CF488**		Ø 17,46	Europe
	81-85		R	R	**CF615**		Ø 17,46	Europe
	81-85		R		**CF630**		Ø 15,87	South Africa
	81-85		R		**CF271**		Ø 17,46	
	81-85		R		**CF631**		Ø 19,05	South Africa
1.3 Eng.E3 (44-50kW)	80-89		R	L	**CF488**		Ø 17,46	Europe
	80-89		R	L	**CF622**		Ø 19,05	
	80-89		R	R	**CF615**		Ø 17,46	Europe
	80-89		R	R	**CF516**		Ø 19,05	
	80-89		R		**CF630**		Ø 15,87	South Africa
	80-89		R		**CF271**		Ø 17,46	
	80-89		R		**CF631**		Ø 19,05	South Africa
1.5 Eng.E5OHC (55-59kW)	81-85		R	L	**CF488**		Ø 17,46	Europe
	84-85		R	L	**CF622**		Ø 19,05	
	81-85		R	R	**CF615**		Ø 17,46	Europe
	84-85		R	R	**CF516**		Ø 19,05	
	81-85		R		**CF630**		Ø 15,87	South Africa
	81-85		R		**CF271**		Ø 17,46	
	81-85		R		**CF631**		Ø 19,05	South Africa
323 III (BF, BW) 8/85-10/95								
1.1 Eng.E1 (40kW)	85-87		R		**CF218**		Ø 17,46	
	87-89		R		**CF227**		Ø 17,46	
1.3, SW Eng.E3 (40-44kW)	85-87		R		**CF218**		Ø 17,46	
	87-89		R		**CF227**		Ø 17,46	
1.4 Eng.B3 (40-44-49-52kW)	85-89		R		**CF227**		Ø 17,46	
1.5 i Eng.E5E3 (70kW)	85-89		R		**CF227**		Ø 17,46	
1.5, SW Eng.B5/ B5E/ B50/ B53 (54-55-65kW)	-87		R		**CF218**		Ø 17,46	
	87-89		R		**CF227**		Ø 17,46	
1.5, SW Eng.E5/ B50/ B53 (55-59-63-65kW)	85-87		R		**CF218**		Ø 17,46	
	87-89		R		**CF227**		Ø 17,46	
1.6 GT Eng.B6D/ E/ F (63-77kW)	85-87		R		**CF218**		Ø 17,46	
	87-89		R		**CF227**		Ø 17,46	
1.6 H-Back Eng.B68 (54kW)	87-89		R		**CF227**		Ø 17,46	
1.6, 4WD SW Eng.B6D/ E/ F/ B65M (63kW)	86-95		R		**CF227**		Ø 17,46	
1.7 D Eng.PN27 (40kW)	86-87		R		**CF218**		Ø 17,46	
	87-89		R		**CF227**		Ø 17,46	
1.7 D Eng.PN46 (42kW)	87-89		R		**CF227**		Ø 17,46	
1.7 D SW Eng.PN26/ PN54 (40kW)	86-93		R		**CF227**		Ø 17,46	
323 IV (BG) 6/89-10/94								
1.3 Eng.B3E/ B383 (49kW)	89-94		R		**CF236**		Ø 17,46	
1.3 16v Eng.B3(16v) (53-54kW)	89-94		R		**CF236**		Ø 17,46	
1.6 Eng.B6E (62kW)	89-91		R		**CF236**		Ø 17,46	-ABS
1.6 16v Eng.B6/ D/ E/ F (65kW)	89-94		R		**CF236**		Ø 17,46	-ABS
1.7 D Eng.PN46/ PN54/ PN62 (42kW)	89-94		R		**CF236**		Ø 17,46	-ABS
1.8 16v, 4WD Eng.BPKat/ BP52 (76kW)	89-94		R		**CF236**		Ø 17,46	
323 V (BA) 8/94-9/98								
1.3 16v Eng.B3(16v) (54kW)	8/94-9/98		R		**CF573**		Ø 19,05	+ABS
	8/94-9/98		R		**CF825**		Ø 17,46	-ABS
	8/94-9/98				**PF258**		Ø 23,81	Alu, +BFR, +ABS
1.5 16v Eng.Z5-DE (65kW)	8/94-9/98		R		**CF573**		Ø 19,05	+ABS
	8/94-9/98		R		**CF825**		Ø 17,46	-ABS
	8/94-9/98				**PF258**		Ø 23,81	Alu, +BFR, +ABS
1.7 TD Eng.4EE1-T (60kW)	2/95-9/98		R		**CF573**		Ø 19,05	
1.8 16v Eng.BP-ZE (84-103kW)	94-98		R		**CF573**		Ø 19,05	
	8/94-9/98				**PF258**		Ø 23,81	Alu, +BFR, +ABS
2.0 D Eng.RF1G (52kW)	96-98		R		**CF573**		Ø 19,05	
323 VI (BJ) 9/98-10/03								
1.3 16v Eng.B3ME (54kW)	98-		R		**CF825**		Ø 17,46	
	9/98-				**PF258**		Ø 23,81	Alu, +BFR, +ABS
1.5 16v Eng.ZL-DE (65kW)	98-		R		**CF825**		Ø 17,46	
1.8 16v Eng.FP (74-84kW)	9/98-				**PF258**		Ø 23,81	Alu, +BFR, +ABS

		Spare Parts	F/R	L/R	FRITECH ref.		DIMENSIONS mm.	NOTE
2.0 D Eng.RF1G (52kW)	98-		R		**CF825**		Ø 17,46	
2.0 TD Eng.RF4F (74kW)	01-		R		**CF825**		Ø 17,46	
2.0 TD Eng.RF-T (66kW)	98-		R		**CF825**		Ø 17,46	
6 I (GG,GY), SW 6/02-7/07								
1.8 Eng.L813 (88kW)	05-07				**PF880**		Ø 20,64	Alu, M/T+A/T
2.0 Eng.LF17/ LF18 (104kW)	02-07				**PF880**		Ø 20,64	Alu, M/T+A/T
2.0 Eng.LF-DE (108kW)	05-07				**PF880**		Ø 20,64	Alu, M/T+A/T
2.0 Di Eng.RF7J (105kW)	05-07				**PF880**		Ø 20,64	Alu, M/T+A/T
2.0 Di, 4WD Eng.RF5C (100kW)	02-07				**PF880**		Ø 20,64	Alu, M/T+A/T
2.0 Di, 4WD Eng.RF5C (89kW)	02-07				**PF880**		Ø 20,64	Alu, M/T+A/T
2.3 Eng.L3C1 (122kW)	02-07				**PF880**		Ø 20,64	Alu, M/T+A/T
2.3 AWD SW Eng.L3 (118kW)	05-07				**PF880**		Ø 20,64	Alu, M/T+A/T
2.3 MPS Eng.L3KG (191kW)	05-07				**PF880**		Ø 20,64	Alu, M/T+A/T
616 6/73-2/78								
1.6 Eng.NA (55kW)	73-75		R		**CF361**		Ø 17,46	
	75-78		R		**CF410**		Ø 19,05	
626 I (CB) 5/79-5/82								
1.6 Eng.NA (55kW)	79-82		R		**CF604**		Ø 20,64	
	79-82		R		**CF411**		Ø 20,64	
	79-82		R		**CF606**		Ø 20,64	
2.0 Eng.HE3/ MA (66kW)	79-82		R		**CF604**		Ø 20,64	
2.0 (60kW)	79-82		R		**CF411**		Ø 20,64	
	79-82		R		**CF606**		Ø 20,64	
626 II (GC) 11/82-9/87								
1.6 Eng.F6 (55-59kW)	1/83-87		R		**CF211**		Ø 19,05	
2.0 D Eng.RF46 (44-46-55-60kW)	1/83-87		R		**CF211**		Ø 19,05	
2.0 GT Eng.FE (88kW)	1/83-87		R		**CF211**		Ø 19,05	
2.0, 12v Eng.FE (60-63-66-68-70-74-79-81-85kW)	1/83-87		R		**CF211**		Ø 19,05	
626 III (GD,GV), SW 6/87-9/97								
1.6, Coupe Eng.F6 (60kW)	87-92		R		**CF236**		Ø 17,46	
1.8, Coupe Eng.F8 (65-69kW)	87-92		R		**CF236**		Ø 17,46	
2.0 12v, Coupe Eng.FE(12v) (60-63-66-68-70-74-79-81-85-88kW)	87-92		R		**CF236**		Ø 17,46	
2.0 16v, Coupe Eng.FEKat.(16v) (103kW)	87-92		R		**CF236**		Ø 17,46	
2.0 D Eng.RF-N (44-46-55-60kW)	87-91		R		**CF236**		Ø 17,46	
2.0 D Comprex SW Eng.RF-CX (55kW)	93-96		R		**CF236**		Ø 17,46	
2.0 D SW Eng.RF-N (60kW)	94-97		R		**CF236**		Ø 17,46	
2.0, Coupe Eng.FEKat. (66kW)	87-92		R		**CF236**		Ø 17,46	
2.2 12v, Coupe, 4WD Eng.F2 (65-85-94-100kW)	87-96		R		**CF236**		Ø 17,46	
626 IV (GE), Cronos 1/92-4/97								
1.8 i Eng.FP (66kW)	94-97		R		**CF236**		Ø 17,46	Ch -960701
	94-97		R		**CF825**		Ø 17,46	Ch 960702-
2.0 D GLX Comprex Eng.RFOHC (55kW)	92-97		R		**CF236**		Ø 17,46	Ch -960701
	94-97		R		**CF825**		Ø 17,46	Ch 960702-
626 V (GF,GW), SW 5/97-12/02								
1.8 Eng.FP9A (74-84kW)	99-		R		**CF981**		Ø 20,64	Ch -011126
1.8 Eng.FPY3 (66kW)	97-99		R		**CF981**		Ø 20,64	
2.0 TD Eng.RF3F (66kW)	98-99		R		**CF981**		Ø 20,64	
2.0 TD Eng.RF4F (74kW)	98-		R		**CF981**		Ø 20,64	Ch -011126
808 1/74-10/78								
1.3 Eng.TC (44kW)	75-12/76		R		**CF361**		Ø 17,46	
	1/77-12/77		R		**CF410**		Ø 19,05	
	75-78		R		**CF618**		Ø 19,05	
818 SW 1/74-10/78								
1.3 Eng.TC (44kW)	74-		R		**CF361**		Ø 17,46	
1.6 Eng.NA (55kW)	77-78		R		**CF618**		Ø 19,05	
929 I (LA) 5/79-7/86								
2.0 Eng.MA (66kW)	-79		R	L	**CF488**		Ø 17,46	
	-79		R	R	**CF615**		Ø 17,46	
	79-86		R		**CF618**		Ø 19,05	
BT-50 I (UN) 12/06-10/11								
2.5 TD, 4WD Eng.WL Turbo (105kW)	06-		R		**CF997**		Ø 23,81	
	06-				**PF933**	Jkc	Ø 25,40	Alu, +ABS, A/T+M/T

MAZDA

		Spare Parts	F/R	L/R	FRITECH ref.		DIMENSIONS mm.	NOTE
2.5 TD, 4WD Eng.WL Turbo (105kW)	06-				**PF932**	Jkc	Ø 25,40	Alu, -ABS, A/T+MT
3.0 CDVi, 4WD Eng.WEAT (115kW)	06-		R		**CF997**		Ø 23,81	
	06-				**PF933**	Jkc	Ø 25,40	Alu, +ABS, A/T+M/T
	06-				**PF932**	Jkc	Ø 25,40	Alu, -ABS, A/T+MT
Demio (DW) 8/98-12/02								
1.3 16v Eng.B3 (46kW)	98-		R		**CF789**		Ø 17,46	
1.3 16v Eng.B3(16v) (40-53-54kW)	98-		R		**CF789**		Ø 17,46	
1.5 16v Eng.B5E (54-55-65kW)	00-		R		**CF789**		Ø 17,46	
GLC 1/77-1/86								
All models	77-80		R	L	**CF740**		Ø 19,05	Alu
	82-86		R	L	**CF622**		Ø 19,05	Wagon
	77-80		R	R	**CF600**		Ø 19,05	Alu
	82-86		R	R	**CF516**		Ø 19,05	Wagon
	81-83		R		**CF271**		Ø 17,46	
Mizer 1/77-1/86								
All models	77-		R		**CF618**		Ø 19,05	
Montrose 1/79-1/81								
All models	79-81		R	L	**CF411**		Ø 20,64	
	79-81		R	R	**CF606**		Ø 20,64	
MPV I (LV) 1/89-9/99								
2.5 TD Eng.LE (85kW)			R	L	**CF507**		Ø 17,46	
			R	R	**CF506**		Ø 17,46	
3.0 i V6 Eng.JE94 (109-113-116kW)			R	L	**CF507**		Ø 17,46	
			R	R	**CF506**		Ø 17,46	
MPV II (LW) 9/99-10/05								
2.0 Eng.FS-DS (88-90kW)	99-02		R		**CF1011**		Ø 19,05	
2.0 Di Eng.RF5C (100kW)	02-		R		**CF1011**		Ø 19,05	
2.3 Eng.L3 (104kW)	02-		R		**CF1011**		Ø 19,05	
MX-3 (EC) 7/91-12/98								
1.6 i Eng.B69 (65kW)	7/91-		R		**CF236**		Ø 17,46	-ABS
1.6 i Eng.B6D (79kW)	94-		R		**CF236**		Ø 17,46	-ABS
MX-5 I (NA) 5/90-4/98								
1.6 Eng.B6EGI (66kW)	95-98				**CZ128**		Ø 19,05	
1.6 16v Eng.B6/ D/ E/ F (54-63-65-77-79-81-85kW)	90-94				**CZ128**		Ø 19,05	
1.8 Eng.BPF1 (96kW)	94-98				**CZ128**		Ø 19,05	
MX-5 II (NB) 5/98-2/05								
1.6 16v Eng.B6Z/ D/ E/ F (81kW)	98-05				**PF930**		Ø 23,81	Alu
	98-05				**CZ128**		Ø 19,05	
1.8 16v Eng.BP (102-107kW)	00-05				**PF930**		Ø 23,81	Alu
	00-05				**CZ128**		Ø 19,05	
1.8 16v Eng.BP-ZE (103kW)	98-05				**CZ128**		Ø 19,05	
MX-5 III (NC) Coupe, Spider 3/05-5/15								
1.8 Eng.L8 (93kW)	05-				**PF930**		Ø 23,81	Alu
2.0 Eng.LF (118kW)	05-				**PF930**		Ø 23,81	Alu
MX-6 (GE6) 2/92-12/97								
2.0 Eng.FS (85kW)	92-		R		**CF236**		Ø 17,46	
2.5 i 24v Eng.KL (120-121-122-123kW)	92-		R		**CF236**		Ø 17,46	
Navajo 1/91-1/94								
All models	91-94		R		**CF962**		Ø 22,20	
Premacy I (CP) 7/99-3/05								
1.8 16v Eng.FP (74-84kW)	99-01		R		**CF981**		Ø 20,64	
2.0 TD Eng.RF3F (66kW)	99-00		R		**CF981**		Ø 20,64	
Protege 1/90-1/92								
1.6 Eng.SOHC	90-92		R		**CF236**		Ø 17,46	A/T
1.8 Eng.DOHC	90-92		R		**CF236**		Ø 17,46	A/T
RX 2 1/70-1/76								
All models	70-76		R		**CF361**		Ø 17,46	Capella
RX 3 1/74-1/76								
All models	74-		R		**CF361**		Ø 17,46	Savanna, Coupè, Saloon
	74-75		R		**CF618**		Ø 19,05	
RX 4 1/73-1/78								
All models	73-76		R	L	**CF488**		Ø 17,46	
	77-78		R	L	**CF411**		Ø 20,64	

MAZDA

		Spare Parts	F/R	L/R	FRITECH ref.		DIMENSIONS mm.	NOTE
All models	73-76		R	R	**CF615**		Ø 17,46	
	77-78		R	R	**CF606**		Ø 20,64	
RX 7 I (SA) 5/79-3/86								
1.1 Wankel Eng.12AN2 (77-83-85kW)	79-82		R	L	**CF740**		Ø 19,05	Alu
	79-82		R	R	**CF600**		Ø 19,05	Alu
	79-80		R		**CF618**		Ø 19,05	

MAZDA LCV

B-Serie I (PE) 2/77-1/82								
1.8 Eng.VC (60-62kW)	77-78		R	L	**CF493**		Ø 19,05	
	77-78		R	R	**CF492**		Ø 19,05	
B-Serie I Rotary 1/71-2/77								
1.6 Eng.NA (55kW)	71-76		R	L	**CF488**		Ø 17,46	
	71-76		R	R	**CF615**		Ø 17,46	
B-Serie III (UF) 1/85-6/99								
1.6 Eng.F6 (55-59kW)			R	L	**CF705**	Luc	Ø 17,46	South Africa
	85-88		R	L	**CF507**		Ø 17,46	
			R	R	**CF706**	Luc	Ø 17,46	South Africa
	85-88		R	R	**CF506**		Ø 17,46	
2.0 Eng.FE (62-65kW)			R	L	**CF705**	Luc	Ø 17,46	South Africa
	85-88		R	L	**CF507**		Ø 17,46	
	85-87		R	L	**CF493**		Ø 19,05	
			R	R	**CF706**	Luc	Ø 17,46	South Africa
	85-88		R	R	**CF506**		Ø 17,46	
	85-87		R	R	**CF492**		Ø 19,05	
	-12/91				**CZ129**		Ø 19,05	
2.2 12v Eng.F2L8 (64-68-85-94-100kW)	12/96-		R		**CF550**		Ø 19,05	9Inch Brake
	1/94-12/96		R		**CF551**		Ø 20,64	9Inch Brake
	-5/94				**CZ129**		Ø 19,05	
2.2 D Eng.R290/ R2 (46-47-52-60kW)			R	L	**CF493**		Ø 19,05	
			R	R	**CF492**		Ø 19,05	
2.5	1/98-12/98		R		**CF550**		Ø 19,05	9Inch Brake
	1/94-12/96		R		**CF551**		Ø 20,64	9Inch Brake
2.5 D 4WD Eng.MD25NA (57kW)	98-99				**CZ129**		Ø 19,05	
2.5 D, 4WD Eng.WL (63kW)	96-99				**CZ129**		Ø 19,05	
2.6 4WD Eng.AM (73kW)	90-		R	L	**CF507**		Ø 17,46	4WD
	-87		R	L	**CF493**		Ø 19,05	
	90-		R	R	**CF506**		Ø 17,46	4WD
	-87		R	R	**CF492**		Ø 19,05	
3.0	1/97-12/98		R		**CF550**		Ø 19,05	9Inch Brake
	1/94-12/96		R		**CF551**		Ø 20,64	9Inch Brake
4.0	1/97-12/98		R		**CF550**		Ø 19,05	9Inch Brake
	1/94-12/96		R		**CF551**		Ø 20,64	9Inch Brake
B-Serie IV (UN) 2/99-12/06								
2.2 8v 4WD Eng.JL22 (68kW)	-8/02				**CZ129**		Ø 19,05	
2.5 D, 4WD Eng.MD25NA (57kW)	99-				**CZ129**		Ø 19,05	
2.5 D, 4WD Eng.WLLE7 (62kW)	02-		R		**CF997**		Ø 23,81	
	02-				**CZ129**		Ø 19,05	
2.5 D, TD, 4WD Eng.WL-T (86kW)	99-05				**CZ129**		Ø 19,05	
2.5 TD 4WD Eng.MD25TI (80kW)	-7/06				**CZ129**		Ø 19,05	
E-Serie II (SR2) 5/84-12/04								
2.0, 4WD Eng.FE18/ FE58/ FEV4 (63kW)	84-88		R	L	**CF493**		Ø 19,05	
	85-89		R	R	**CF492**		Ø 19,05	
2.2 D Eng.R203/ R207 (46kW)	84-88		R	L	**CF493**		Ø 19,05	
	84-88		R	R	**CF492**		Ø 19,05	

MERCEDES BENZ

114 (W114) 1/68-11/76								
230.6 (114.015) Eng.M180.954 (88kW)	68-76				**CZ018**		Ø 23,81	
250 (114.010) Eng.M114.920 (85-96kW)	68-72				**CZ018**		Ø 23,81	
250 C (114.011) Eng.M114.920 (96kW)	69-72				**CZ018**		Ø 23,81	
280 (114.060) Eng.M110.921 (118kW)	72-76				**CZ018**		Ø 23,81	
280 E (114.062) Eng.M110.981 (136kW)	72-76				**CZ018**		Ø 23,81	

MERCEDES BENZ

		Spare Parts	F/R	L/R	FRITECH ref.		DIMENSIONS mm.	NOTE
114 Coupe (W114) 4/69-2/77								
250 C (114.021) Eng.M114.920 (96kW)	69-72				**CZ018**		Ø 23,81	
250 CE (114.022) Eng.M114.980 (110kW)	69-72				**CZ018**		Ø 23,81	
250, C 2.8 (114.023) Eng.M130.923 (96kW)	72-76				**CZ018**		Ø 23,81	
280 C (114.073) Eng.M110.921 (118kW)	72-77				**CZ018**		Ø 23,81	
280 CE (114.072) Eng.M110.981 (136kW)	72-77				**CZ018**		Ø 23,81	
115 (W115) 1/68-1/77								
200 (115.015) Eng.M115.923/ 926 (63-70kW)	68-77				**CZ018**		Ø 23,81	
200 D (115.115/.112) Eng.OM615.913 (40kW)	68-77				**CZ018**		Ø 23,81	
220 (115.010) Eng.M115.920 (77kW)	68-73				**CZ018**		Ø 23,81	
220 (115.010) Eng.M115.924 (66kW)	68-73				**CZ018**		Ø 23,81	
220 D (115.110) Eng.OM615.912 (44kW)	68-77				**CZ018**		Ø 23,81	
230.4 (115.017) Eng.M115.951 (81kW)	73-76				**CZ018**		Ø 23,81	
240 D (115.117/.119) Eng.OM616.916 (48kW)	73-77				**CZ018**		Ø 23,81	
240 D 3.0 (115.114) Eng.OM617.910 (59kW)	74-76				**CZ018**		Ø 23,81	
190 II (W201) 10/82-8/93								
1.8 E (201.018) Eng.M102.910 (77-80kW)	90-93				**PF156**		Ø 22,20/17,46	Alu
	90-93				**CZ016**		Ø 23,81	
	90-93				**PZ023**		Ø 19,05	Alu
	90-93				**PZ113**		Ø 19,05	
2.0 Eng.M102.921 (66kW)	82-84				**PF156**		Ø 22,20/17,46	Alu
	82-84				**CZ016**		Ø 23,81	
	82-84				**PZ023**		Ø 19,05	Alu
	82-84				**PZ113**		Ø 19,05	
2.0 Eng.M102.924 (75-77kW)	84-90				**PF156**		Ø 22,20/17,46	Alu
	84-90				**CZ016**		Ø 23,81	
	84-90				**PZ023**		Ø 19,05	Alu
	84-90				**PZ113**		Ø 19,05	
2.0 D (201.122) Eng.OM601.911 (53-55kW)	83-93				**PF156**		Ø 22,20/17,46	Alu
	83-93				**CZ016**		Ø 23,81	
	83-93				**PZ023**		Ø 19,05	Alu
	83-93				**PZ113**		Ø 19,05	
2.3 E (201.028) Eng.M102.985 (97-100kW)	86-93				**PF156**		Ø 22,20/17,46	Alu
					CZ016		Ø 23,81	Ch -F655709
					CZ017		Ø 23,81	Ch F655710-, Incl. TD
	86-93				**PZ023**		Ø 19,05	Alu
	86-93				**PZ113**		Ø 19,05	
2.3-16 E (201.034) Eng.M102.983	84-88				**PF158**		Ø 23,81	Alu, RHD
(125-130-136kW)	84-88				**CZ016**		Ø 23,81	
	84-88				**PZ023**		Ø 19,05	Alu
	84-88				**PZ113**		Ø 19,05	
2.5 D (201.126) Eng.OM602.911 (66-69kW)	85-93				**PF156**		Ø 22,20/17,46	Alu
					CZ016		Ø 23,81	Ch -F655709
					CZ017		Ø 23,81	Ch F655710-, Incl. TD
	85-93				**PZ023**		Ø 19,05	Alu
	85-93				**PZ113**		Ø 19,05	
2.5 E Evolution II Eng.M102.992 (173kW)	90-93				**PF158**		Ø 23,81	Alu, RHD
	90-93				**PF157**		Ø 25,40/19,05	Alu
	90-93				**CZ016**		Ø 23,81	
	90-93				**PZ023**		Ø 19,05	Alu
	90-93				**PZ113**		Ø 19,05	
2.5 TD (201.128) Eng.OM602.961 (90-93kW)	88-93				**PF156**		Ø 22,20/17,46	Alu
					CZ016		Ø 23,81	Ch -F655709
					CZ017		Ø 23,81	Ch F655710-, Incl. TD
	88-93				**PZ023**		Ø 19,05	Alu
	88-93				**PZ113**		Ø 19,05	
2.5-16 E Eng.M102.990 (150kW)	88-93				**PF158**		Ø 23,81	Alu, RHD
	90-92				**PF157**		Ø 25,40/19,05	Alu
	88-93				**CZ016**		Ø 23,81	
	88-93				**PZ023**		Ø 19,05	Alu
	88-93				**PZ113**		Ø 19,05	
2.5-16 E Eng.M102.991 (143kW)	89-93				**PF158**		Ø 23,81	Alu, RHD
	90-92				**PF157**		Ø 25,40/19,05	Alu
	89-93				**CZ016**		Ø 23,81	

		Spare Parts	F/R	L/R	FRITECH ref.		DIMENSIONS mm.	NOTE
2.5-16 E Eng.M102.991 (143kW)	89-93				**PZ023**		Ø 19,05	Alu
	89-93				**PZ113**		Ø 19,05	
2.6 E (201.029) Eng.M103.942 (118-122kW)	86-93				**PF158**		Ø 23,81	Alu, RHD
					CZ016		Ø 23,81	Ch -F640356
					CZ017		Ø 23,81	Ch F640357-, Incl. TD
	86-93				**PZ023**		Ø 19,05	Alu
	86-93				**PZ113**		Ø 19,05	
200 E Eng.M102.962 (85-87kW)	85-93				**PF156**		Ø 22,20/17,46	Alu
	85-93				**CZ016**		Ø 23,81	
	85-93				**PZ023**		Ø 19,05	Alu
	85-93				**PZ113**		Ø 19,05	
200 E Eng.M102.962 (93kW)	82-93				**PF156**		Ø 22,20/17,46	Alu
	82-93				**CZ016**		Ø 23,81	
	82-93				**PZ023**		Ø 19,05	Alu
	82-93				**PZ113**		Ø 19,05	
200 E (201.024) Eng.M102.961/ 962 (83kW)	82-93				**PF156**		Ø 22,20/17,46	Alu
	82-93				**CZ016**		Ø 23,81	
	82-93				**PZ023**		Ø 19,05	Alu
	82-93				**PZ113**		Ø 19,05	
Classe A I (W168) 7/97-8/04								
A 140 (168.031/.131) Eng.M166.940 (60kW)			R		**CF318**		Ø 17,78	Ch J168710-, Alu, 1 holes of fixing, +ESP
			R		**CF856**		Ø 17,78	Ch J168710-, Alu, 2 holes of fixing
	97-		R		**CF317**		Ø 19,05	Ch -J168709, Alu
	97-				**PF239**	Luc	Ø 22,20	Ch -J016124, Alu
					PF240	Luc	Ø 22,20	Ch J016125-, Alu
	97-7/98				**PZ094**	Fte	Ø 15,87	Ch -J080609
	97-7/98				**PZ108**	Fte	Ø 15,87	Ch -J080609
	8/98-				**PZ095**	Fte	Ø 15,87	Ch J080610-, Pla
	8/98-				**PZ109**	Fte	Ø 15,87	Ch J080610-
A 160 (168.033/.133) Eng.M166.960 (75kW)			R		**CF318**		Ø 17,78	Ch J168710-, Alu, 1 holes of fixing, +ESP
			R		**CF856**		Ø 17,78	Ch J168710-, Alu, 2 holes of fixing
	97-		R		**CF317**		Ø 19,05	Ch -J168709, Alu
	97-				**PF239**	Luc	Ø 22,20	Ch -J016124, Alu
					PF240	Luc	Ø 22,20	Ch J016125-, Alu
	97-7/98				**PZ094**	Fte	Ø 15,87	Ch -J080609
	97-7/98				**PZ108**	Fte	Ø 15,87	Ch -J080609
	8/98-				**PZ095**	Fte	Ø 15,87	Ch J080610-, Pla
	8/98-				**PZ109**	Fte	Ø 15,87	Ch J080610-
A 160 CDi (168.006) Eng.OM668.940 (55kW)			R		**CF318**		Ø 17,78	Ch J168710-, Alu, 1 holes of fixing, +ABS, +ESP
			R		**CF856**		Ø 17,78	Ch J168710-, Alu, 2 holes of fixing
			R		**CF317**		Ø 19,05	Ch -J168709, Alu
					PF239	Luc	Ø 22,20	Ch -J016124, Alu
					PF240	Luc	Ø 22,20	Ch J016125-, Alu
	01-				**PZ095**	Fte	Ø 15,87	Ch J080610-, Pla
	01-				**PZ109**	Fte	Ø 15,87	Ch J080610-
A 160 CDi (168.007) Eng.OM668.941 (44kW)			R		**CF318**		Ø 17,78	Ch J168710-, Alu, 1 holes of fixing, +ABS, +ESP
			R		**CF856**		Ø 17,78	Ch J168710-, Alu, 2 holes of fixing
	98-		R		**CF317**		Ø 19,05	Ch -J168709, Alu
	98-				**PF239**	Luc	Ø 22,20	Ch -J016124, Alu
					PF240	Luc	Ø 22,20	Ch J016125-, Alu
	8/98-				**PZ095**	Fte	Ø 15,87	Ch J080610-, Pla
	8/98-				**PZ109**	Fte	Ø 15,87	Ch J080610-
A 170 CDi (168.008) Eng.OM668.940 (66kW)			R		**CF318**		Ø 17,78	Ch J168710-, Alu, 1 holes of fixing, +ESP
			R		**CF856**		Ø 17,78	Ch J168710-, Alu, 2 holes of fixing
	98-		R		**CF317**		Ø 19,05	Ch -J168709, Alu
	98-				**PF239**	Luc	Ø 22,20	Ch -J016124, Alu
					PF240	Luc	Ø 22,20	Ch J016125-, Alu
	7/98-				**PZ094**	Fte	Ø 15,87	Ch -J080609
	7/98-				**PZ108**	Fte	Ø 15,87	Ch -J080609
	8/98-				**PZ095**	Fte	Ø 15,87	Ch J080610-, Pla
	8/98-				**PZ109**	Fte	Ø 15,87	Ch J080610-

MERCEDES BENZ

		Spare Parts	F/R	L/R	FRITECH ref.		DIMENSIONS mm.	NOTE
A 170 CDi (168.009/109) Eng.OM668.942 (70kW)			R		**CF318**		Ø 17,78	Ch J168710-, Alu, 1 holes of fixing, +ESP
			R		**CF856**		Ø 17,78	Ch J168710-, Alu, 2 holes of fixing
			R		**CF317**		Ø 19,05	Ch -J168709, Alu
					PF239	Luc	Ø 22,20	Ch -J016124, Alu
					PF240	Luc	Ø 22,20	Ch J016125-, Alu
	01-				**PZ095**	Fte	Ø 15,87	Ch J080610-, Pla
	01-				**PZ109**	Fte	Ø 15,87	Ch J080610-
A 190 (168.032/.132) Eng.M166.990 (92kW)					**PF240**	Luc	Ø 22,20	Ch J016125-, Alu, +ESP
	99-				**PZ095**	Fte	Ø 15,87	Ch J080610-, Pla
	99-				**PZ109**	Fte	Ø 15,87	Ch J080610-
A 210 (168.035/.135) Eng.M166.995 (103kW)					**PF240**	Luc	Ø 22,20	Ch J016125-, Alu
	02-				**PZ095**	Fte	Ø 15,87	Ch J080610-, Pla
	02-				**PZ109**	Fte	Ø 15,87	Ch J080610-
Classe A II (W169) 9/04-5/12								
A 150 (169.031/331) Eng.M266.920 (70kW)	04-				**PF838**	Trw	Ø 23,81	Alu
A 160 (169.031/331) Eng.M266.920 (70kW)	09-				**PF838**	Trw	Ø 23,81	Alu
A 160 CDi (169.006/306) Eng.OM640.942 (60kW)	04-				**PF838**	Trw	Ø 23,81	Alu
A 170 (169.032/332) Eng.M266.940 (85kW)	04-				**PF838**	Trw	Ø 23,81	Alu
A 170 NGT (245.233) Eng.M266.940 (85kW)	08-				**PF838**	Trw	Ø 23,81	Alu
A 180 (169.032/332) Eng.M266.940 (85kW)	09-				**PF838**	Trw	Ø 23,81	Alu
A 180 CDi (169.007/307) Eng.OM640.940 (80kW)	04-				**PF838**	Trw	Ø 23,81	Alu
A 200 (169.033/333) Eng.M266.960 (100kW)	04-				**PF838**	Trw	Ø 23,81	Alu
A 200 CDi (169.008/308) Eng.OM640.941 (100-103kW)	04-				**PF838**	Trw	Ø 23,81	Alu
A 200 T. (169.034/334) Eng.M266.980 (142kW)	05-				**PF838**	Trw	Ø 23,81	Alu
Classe B I (W245) 3/05-9/11								
B 150 (245.231) Eng.M266.920 (70kW)	05-				**PF838**	Trw	Ø 23,81	Alu
B 160 (245.231) Eng.M266.920 (70kW)	09-				**PF838**	Trw	Ø 23,81	Alu
B 170 (245.232) Eng.M266.940 (85kW)	05-				**PF838**	Trw	Ø 23,81	Alu
B 180 (245.232) Eng.M266.940 (85kW)	09-				**PF838**	Trw	Ø 23,81	Alu
B 180 CDi (245.207) Eng.OM640.940 (80kW)	05-				**PF838**	Trw	Ø 23,81	Alu
B 180 NGT (235.233) Eng.M266.940 (85kW)	08-11				**PF838**	Trw	Ø 23,81	Alu
B 200 (245.233) Eng.M266.960 (100kW)	05-				**PF838**	Trw	Ø 23,81	Alu
B 200 CDi (245.208) Eng.OM640.941 (103kW)	05-				**PF838**	Trw	Ø 23,81	Alu
B 200 T (245.234) Eng.M266.980 (142kW)	05-				**PF838**	Trw	Ø 23,81	Alu
Classe C I (W202) 3/93-5/00								
C 180 (202.018) Eng.M111.920/ 921 (89-90kW)					**PF611**	Trw	Ø 19,05/23,81	Ch A136774 / F110262-A519673 / F619720, Alu
					PF633		Ø 19,05/23,81	Ch A519674 / F619721-A809594 / F894083, Alu
					PF831		Ø 19,05/23,81	Ch A809595 / F894084-, Alu
	6/93-				**PF156**		Ø 22,20/17,46	Ch -A072907/F060569, Alu
					PF158		Ø 23,81	Ch A072907 / F060569-, Alu
	93-00				**CZ017**		Ø 23,81	
	93-00				**PZ023**		Ø 19,05	Alu
	93-00				**PZ113**		Ø 19,05	
C 200 (202.020) Eng.M111.941/ 945 (100kW)					**PF611**	Trw	Ø 19,05/23,81	Ch A136774 / F110262-A519673 / F619720, Alu
					PF633		Ø 19,05/23,81	Ch A519674 / F619721-A809594 / F894083, Alu
					PF831		Ø 19,05/23,81	Ch A809595 / F894084-, Alu
	1/94-				**PF158**		Ø 23,81	Ch -A136773/F110261, Alu
	94-00				**CZ017**		Ø 23,81	
	94-00				**PZ023**		Ø 19,05	Alu
	94-00				**PZ113**		Ø 19,05	
C 200 CDi (202.134) Eng.OM611.960 (75kW)					**PF831**		Ø 19,05/23,81	Ch A809595 / F894084-, Alu
	98-00				**CZ017**		Ø 23,81	
	98-00				**PZ023**		Ø 19,05	Alu
	98-00				**PZ113**		Ø 19,05	
C 200 D (202.120) Eng.OM601.913 (55kW)					**PF611**	Trw	Ø 19,05/23,81	Ch A136774 / F110262-A519673 / F619720, Alu
					PF633		Ø 19,05/23,81	Ch A519674 / F619721-A809594 / F894083, Alu
	6/93-				**PF156**		Ø 22,20/17,46	Ch -A072907/F060569, Alu
					PF158		Ø 23,81	Ch A072907 / F060569-, Alu
	93-00				**CZ017**		Ø 23,81	
	93-00				**PZ023**		Ø 19,05	Alu
	93-00				**PZ113**		Ø 19,05	
C 200 D (202.122) Eng.OM604.915 (65kW)					**PF611**	Trw	Ø 19,05/23,81	Ch A136774 / F110262-A519673 / F619720, Alu
					PF633		Ø 19,05/23,81	Ch A519674 / F619721-A809594 / F894083, Alu

		Spare Parts	F/R	L/R	FRITECH ref.		DIMENSIONS mm.	NOTE
C 200 D (202.122) Eng.OM604.915 (65kW)					**PF156**		Ø 22,20/17,46	Ch -A072907/F060569, Alu
					PF158		Ø 23,81	Ch A072907 / F060569-, Alu
	96-00				**CZ017**		Ø 23,81	
	96-00				**PZ023**		Ø 19,05	Alu
	96-00				**PZ113**		Ø 19,05	
C 200 K. (202.025) Eng.M111.944 (132-141kW)					**PF611**	Trw	Ø 19,05/23,81	Ch A136774 / F110262-A519673 / F619720, Alu
					PF633		Ø 19,05/23,81	Ch A519674 / F619721-A809594 / F894083, Alu
	95-				**PF158**		Ø 23,81	Ch -A136773/F110261, Alu
	95-00				**CZ017**		Ø 23,81	
	95-00				**PZ023**		Ø 19,05	Alu
	95-00				**PZ113**		Ø 19,05	
C 220 (202.022) Eng.M111.961 (110kW)					**PF611**	Trw	Ø 19,05/23,81	Ch A136774 / F110262-A519673 / F619720, Alu
	6/93-				**PF158**		Ø 23,81	Ch -A136773/F110261, Alu
	93-00				**CZ017**		Ø 23,81	
	93-00				**PZ023**		Ø 19,05	Alu
	93-00				**PZ113**		Ø 19,05	
C 220 CDi (202.133) Eng.OM611.960 (92kW)					**PF633**		Ø 19,05/23,81	Ch A519674 / F619721-A809594 / F894083, Alu
					PF831		Ø 19,05/23,81	Ch A809595 / F894084-, Alu
	97-00				**CZ017**		Ø 23,81	
	97-00				**PZ023**		Ø 19,05	Alu
	97-00				**PZ113**		Ø 19,05	
C 220 D (202.121) Eng.OM604.910 (55-70kW)					**PF611**	Trw	Ø 19,05/23,81	Ch A136774 / F110262-A519673 / F619720, Alu
					PF633		Ø 19,05/23,81	Ch A519674 / F619721-A809594 / F894083, Alu
	6/93-				**PF156**		Ø 22,20/17,46	Ch -A072907/F060569, Alu
					PF158		Ø 23,81	Ch A072907 / F060569-, Alu
	93-00				**CZ017**		Ø 23,81	
	93-00				**PZ023**		Ø 19,05	Alu
	93-00				**PZ113**		Ø 19,05	
C 230 (202.023) Eng.M111.974 (110kW)					**PF611**	Trw	Ø 19,05/23,81	Ch A136774 / F110262-A519673 / F619720, Alu
					PF831		Ø 19,05/23,81	Ch A809595 / F894084-, Alu
	96-00				**CZ017**		Ø 23,81	
	96-00				**PZ023**		Ø 19,05	Alu
	96-00				**PZ113**		Ø 19,05	
C 230 K. (202.024) Eng.M111.975 (142kW)					**PF611**	Trw	Ø 19,05/23,81	Ch A136774 / F110262-A519673 / F619720, Alu
					PF633		Ø 19,05/23,81	Ch A519674 / F619721-A809594 / F894083, Alu
	95-00				**CZ017**		Ø 23,81	
	95-00				**PZ023**		Ø 19,05	Alu
	95-00				**PZ113**		Ø 19,05	
C 240 (202.026) Eng.M112.910 (125kW)	97-00				**CZ017**		Ø 23,81	
	97-00				**PZ023**		Ø 19,05	Alu
	97-00				**PZ113**		Ø 19,05	
C 250 D (202.125) Eng.OM605.910 (83kW)					**PF611**	Trw	Ø 19,05/23,81	Ch A136774 / F110262-A519673 / F619720, Alu
	6/93-				**PF156**		Ø 22,20/17,46	Ch -A072907/F060569, Alu
					PF158		Ø 23,81	Ch A072907 / F060569-, Alu
	93-00				**CZ017**		Ø 23,81	
	93-00				**PZ023**		Ø 19,05	Alu
	93-00				**PZ113**		Ø 19,05	
C 250 TD (202.128) Eng.OM605.960 (110kW)					**PF611**	Trw	Ø 19,05/23,81	Ch A136774 / F110262-A519673 / F619720, Alu
					PF633		Ø 19,05/23,81	Ch A519674 / F619721-A809594 / F894083, Alu
					PF831		Ø 19,05/23,81	Ch A809595 / F894084-, Alu
	95-00				**CZ017**		Ø 23,81	
	95-00				**PZ023**		Ø 19,05	Alu
	95-00				**PZ113**		Ø 19,05	
C 280 (202.028) Eng.M104.941 (142kW)					**PF611**	Trw	Ø 19,05/23,81	Ch A136774 / F110262-A519673 / F619720, Alu
					PF831		Ø 19,05/23,81	Ch A809595 / F894084-, Alu
	6/93-				**PF158**		Ø 23,81	Ch -A136773/F110261, Alu
	93-00				**CZ017**		Ø 23,81	
	93-00				**PZ023**		Ø 19,05	Alu
	93-00				**PZ113**		Ø 19,05	
C 280 (202.029) Eng.M112.920 (145kW)					**PF611**	Trw	Ø 19,05/23,81	Ch A136774 / F110262-A519673 / F619720, Alu
	97-				**PF158**		Ø 23,81	Ch -A136773/ F110261, Alu
	97-00				**CZ017**		Ø 23,81	
	97-00				**PZ023**		Ø 19,05	Alu
	97-00				**PZ113**		Ø 19,05	

MERCEDES BENZ

		Spare Parts	F/R	L/R	FRITECH ref.		DIMENSIONS mm.	NOTE
C 36 AMG (202.028) Eng.M104.941(AMG3.6)					**PF611**	Trw	Ø 19,05/23,81	Ch A136774 / F110262-A519673 / F619720, Alu
(206kW)	5/94-				**PF158**		Ø 23,81	Ch -A136773/F110261, Alu
	94-00				**CZ017**		Ø 23,81	
C 43 AMG (202.033) Eng.M113.944 (225kW)	97-00				**PF627**	Trw	Ø 22,20/25,4	Alu
Classe C I SW (S202) 6/96-3/01								
C 180 T (202.078) Eng.M111.920/ 921 (90kW)					**PF831**		Ø 19,05/23,81	Ch A809595 / F894084-, Alu
C 200 T (202.080) Eng.M111.941/ 945 (100kW)					**PF831**		Ø 19,05/23,81	Ch A809595 / F894084-, Alu
C 200 T CDi (202.194) Eng.OM611.960 (75kW)					**PF831**		Ø 19,05/23,81	Ch A809595 / F894084-, Alu
C 220 T CDi (202.193) Eng.OM611.960 (92kW)					**PF831**		Ø 19,05/23,81	Ch A809595 / F894084-, Alu
C 230 T (202.083) Eng.M111.974 (110kW)					**PF633**		Ø 19,05/23,81	Ch A519674 / F619721-A809594 / F894083, Alu
					PF831		Ø 19,05/23,81	Ch A809595 / F894084-, Alu
C 240 T (202.086) Eng.M112.910 (125kW)	6/97-9/00				**PF634**		Ø 19,05/23,81	Alu, +ESP
					PF633		Ø 19,05/23,81	Ch A519674 / F619721-A809594 / F894083, Alu
C 250 T TD (202.188) Eng.OM605.960 (110kW)					**PF831**		Ø 19,05/23,81	Ch A809595 / F894084-, Alu
C 280 T (202.089) Eng.M112.920 (145kW)	6/97-3/01				**PF634**		Ø 19,05/23,81	Alu, +ESP
					PF633		Ø 19,05/23,81	Ch A519674 / F619721-A809594 / F894083, Alu
					PF831		Ø 19,05/23,81	Ch A809595 / F894084-, Alu
C 43 AMG (202.093) Eng.M113.944 (225kW)	99-02				**PF627**	Trw	Ø 22,20/25,4	Alu
Classe C II (W203) 5/00-12/06								
C 180 (203.035) Eng.M111.951 (95kW)	10/00-5/02				**PF837**	Ate	Ø 20,64/23,81	Alu, +ABS, RHD
	10/00-5/02				**PF832**		Ø 20,64/23,81	Alu, +ABS, LHD
	00-02				**PZ096**	Fte	Ø 19,05	Pla, M/T
	00-02				**PZ110**	Fte	Ø 19,05	M/T
C 180 K. (203.046) Eng.M271.946 (105kW)	5/02-				**PF837**	Ate	Ø 20,64/23,81	Alu, +ABS, RHD
	5/02-				**PF832**		Ø 20,64/23,81	Alu, +ABS, LHD
	02-				**PZ096**	Fte	Ø 19,05	Pla, M/T
	02-				**PZ110**	Fte	Ø 19,05	M/T
C 200 CDi Eng.OM646.962 (75kW)	2/01-				**PF837**	Ate	Ø 20,64/23,81	Alu, +ABS, RHD
	2/01-				**PF832**		Ø 20,64/23,81	Alu, +ABS, LHD
	2/01-				**PZ096**	Fte	Ø 19,05	Pla, M/T
	2/01-				**PZ110**	Fte	Ø 19,05	M/T
C 200 CDi (203.004) Eng.OM611.962 (85kW)	9/00-				**PF837**	Ate	Ø 20,64/23,81	Alu, +ABS, RHD
	9/00-				**PF832**		Ø 20,64/23,81	Alu, +ABS, LHD
	00-				**PZ096**	Fte	Ø 19,05	Pla, M/T
	00-				**PZ110**	Fte	Ø 19,05	M/T
C 200 CDi (203.007) Eng.OM646.962 (90kW)	4/03-				**PF837**	Ate	Ø 20,64/23,81	Alu, +ABS, RHD
	4/03-				**PF832**		Ø 20,64/23,81	Alu, +ABS, LHD
	03-				**PZ096**	Fte	Ø 19,05	Pla, M/T
	03-				**PZ110**	Fte	Ø 19,05	M/T
C 200 CGI K. (203.043) Eng.M271.942 (125kW)	7/03-				**PF837**	Ate	Ø 20,64/23,81	Alu, +ABS, RHD
	7/03-				**PF832**		Ø 20,64/23,81	Alu, +ABS, LHD
	03-				**PZ096**	Fte	Ø 19,05	Pla, M/T
	03-				**PZ110**	Fte	Ø 19,05	M/T
C 200 K. (203.042) Eng.M271.940 (120kW)	5/02-				**PF837**	Ate	Ø 20,64/23,81	Alu, +ABS, RHD
	5/02-				**PF832**		Ø 20,64/23,81	Alu, +ABS, LHD
	5/02-				**PZ096**	Fte	Ø 19,05	Pla, M/T
	5/02-				**PZ110**	Fte	Ø 19,05	M/T
C 200 K. (203.045) Eng.M111.955 (120kW)	5/00-5/02				**PF837**	Ate	Ø 20,64/23,81	Alu, +ABS, RHD
	5/00-5/02				**PF832**		Ø 20,64/23,81	Alu, +ABS, LHD
	00-02				**PZ096**	Fte	Ø 19,05	Pla, M/T
	00-02				**PZ110**	Fte	Ø 19,05	M/T
C 220 CDi (203.006) Eng.OM611.962 (105kW)	5/00-				**PF837**	Ate	Ø 20,64/23,81	Alu, +ABS, RHD
	5/00-				**PF832**		Ø 20,64/23,81	Alu, +ABS, LHD
	00-				**PZ096**	Fte	Ø 19,05	Pla, M/T
	00-				**PZ110**	Fte	Ø 19,05	M/T
C 220 CDi (203.008) Eng.OM646.963 (110kW)	2/04-				**PF837**	Ate	Ø 20,64/23,81	Alu, +ABS, RHD
	2/04-				**PF832**		Ø 20,64/23,81	Alu, +ABS, LHD
	2/04-				**PZ096**	Fte	Ø 19,05	Pla, M/T
	2/04-				**PZ110**	Fte	Ø 19,05	M/T
C 230 (203.052) Eng.M272.920 (150kW)	05-				**PF833**		Ø 20,64/25,40	Alu, +ABS
	05-				**PZ096**	Fte	Ø 19,05	Pla, M/T
	05-				**PZ110**	Fte	Ø 19,05	M/T
C 230 K. (203.040) Eng.M271.948 (141kW)	04-				**PF837**	Ate	Ø 20,64/23,81	Alu, +ABS, RHD
	04-				**PF832**		Ø 20,64/23,81	Alu, +ABS, LHD

		Spare Parts	F/R	L/R	FRITECH ref.		DIMENSIONS mm.	NOTE
C 230 K. (203.040) Eng.M271.948 (141kW)	04-				**PZ096**	Fte	Ø 19,05	Pla, M/T
	04-				**PZ110**	Fte	Ø 19,05	M/T
C 240 (203.061) Eng.M112.912 (125kW)	5/00-				**PF837**	Ate	Ø 20,64/23,81	Alu, +ABS, RHD
	5/00-				**PF832**		Ø 20,64/23,81	Alu, +ABS, LHD
	00-				**PZ096**	Fte	Ø 19,05	Pla, M/T
	00-				**PZ110**	Fte	Ø 19,05	M/T
C 240 4-matic (203.081) Eng.M112.916 (125kW)	7/02-				**PF833**		Ø 20,64/25,40	Alu, +ABS
C 270 CDi (203.016) Eng.OM612.962 (125kW)	12/00-				**PF833**		Ø 20,64/25,40	Alu, +ABS
	00-				**PZ096**	Fte	Ø 19,05	Pla, M/T
	00-				**PZ110**	Fte	Ø 19,05	M/T
C 280 (203.054) Eng.M272.940 (170kW)	05-				**PF833**		Ø 20,64/25,40	Alu, +ABS
C 30 CDi AMG (203.018) Eng.OM612.990 (170kW)	1/03-				**PF833**		Ø 20,64/25,40	Alu, +ABS
C 32 AMG K. (203.065) Eng.M112.961 (260kW)	2/01-				**PF833**		Ø 20,64/25,40	Alu, +ABS
C 320 (203.064) Eng.M112.946 (160kW)	5/00-				**PF833**		Ø 20,64/25,40	Alu, +ABS
	00-				**PZ096**	Fte	Ø 19,05	Pla, M/T
	00-				**PZ110**	Fte	Ø 19,05	M/T
C 320 4-matic (203.084) Eng.M112.953 (160kW)	7/02-				**PF833**		Ø 20,64/25,40	Alu, +ABS
C 320 CDi (203.020) Eng.OM642.910 (165kW)	05-				**PF833**		Ø 20,64/25,40	Alu, +ABS
C 350 (203.056) Eng.M272.960 (200kW)	05-				**PF833**		Ø 20,64/25,40	Alu, +ABS
	05-				**PZ096**	Fte	Ø 19,05	Pla, M/T
	05-				**PZ110**	Fte	Ø 19,05	M/T
C 350 4-matic (203.087) Eng.M272.970 (200kW)	05-				**PF833**		Ø 20,64/25,40	Alu, +ABS
C 55 AMG (203.076) Eng.M113.988 (270kW)	2/04-				**PF833**		Ø 20,64/25,40	Alu, +ABS
Classe C II SportCoupe (CL203) 3/01-12/06								
C 160 K. (203.730) Eng.M271.921 (90kW)	02-				**PZ096**	Fte	Ø 19,05	Pla, M/T
	02-				**PZ110**	Fte	Ø 19,05	M/T
C 180 (203.735) Eng.M111.951 (95kW)	3/01-5/02				**PF837**	Ate	Ø 20,64/23,81	Alu, +ABS, RHD
	3/01-5/02				**PF832**		Ø 20,64/23,81	Alu, +ABS, LHD
	01-02				**PZ096**	Fte	Ø 19,05	Pla, M/T
	01-02				**PZ110**	Fte	Ø 19,05	M/T
C 180 K. (203.746) Eng.M271.946 (105kW)	5/02-				**PF837**	Ate	Ø 20,64/23,81	Alu, +ABS, RHD
	5/02-				**PF832**		Ø 20,64/23,81	Alu, +ABS, LHD
	02-				**PZ096**	Fte	Ø 19,05	Pla, M/T
	02-				**PZ110**	Fte	Ø 19,05	M/T
C 200 CDi (203.707) Eng.OM646.962 (90kW)	7/03-				**PF837**	Ate	Ø 20,64/23,81	Alu, +ABS, RHD
	7/03-				**PF832**		Ø 20,64/23,81	Alu, +ABS, LHD
	03-				**PZ096**	Fte	Ø 19,05	Pla, M/T
	03-				**PZ110**	Fte	Ø 19,05	M/T
C 200 CGI K. (203.743) Eng.M271.942 (125kW)	7/03-				**PF837**	Ate	Ø 20,64/23,81	Alu, +ABS, RHD
	7/03-				**PF832**		Ø 20,64/23,81	Alu, +ABS, LHD
	03-				**PZ096**	Fte	Ø 19,05	Pla, M/T
	03-				**PZ110**	Fte	Ø 19,05	M/T
C 200 K. (203.742) Eng.M271.940 (120kW)	5/02-				**PF837**	Ate	Ø 20,64/23,81	Alu, +ABS, RHD
	5/02-				**PF832**		Ø 20,64/23,81	Alu, +ABS, LHD
	02-				**PZ096**	Fte	Ø 19,05	Pla, M/T
	02-				**PZ110**	Fte	Ø 19,05	M/T
C 200 K. (203.745) Eng.M111.955 (120kW)	3/01-5/02				**PF837**	Ate	Ø 20,64/23,81	Alu, +ABS, RHD
	3/01-5/02				**PF832**		Ø 20,64/23,81	Alu, +ABS, LHD
	01-02				**PZ096**	Fte	Ø 19,05	Pla, M/T
	01-02				**PZ110**	Fte	Ø 19,05	M/T
C 220 CDi (203.706) Eng.OM611.962 (105kW)	3/01-				**PF837**	Ate	Ø 20,64/23,81	Alu, +ABS, RHD
	3/01-				**PF832**		Ø 20,64/23,81	Alu, +ABS, LHD
	01-				**PZ096**	Fte	Ø 19,05	Pla, M/T
	01-				**PZ110**	Fte	Ø 19,05	M/T
C 220 CDi (203.708) Eng.OM646.963 (110kW)	2/04-				**PF837**	Ate	Ø 20,64/23,81	Alu, +ABS, RHD
	2/04-				**PF832**		Ø 20,64/23,81	Alu, +ABS, LHD
	04-				**PZ096**	Fte	Ø 19,05	Pla, M/T
	04-				**PZ110**	Fte	Ø 19,05	M/T
C 230 (203.752) Eng.M272.920 (150kW)	05-				**PZ096**	Fte	Ø 19,05	Pla, M/T
	05-				**PZ110**	Fte	Ø 19,05	M/T
C 230 K. (203.740) Eng.M271.948 (141kW)	5/02-				**PF837**	Ate	Ø 20,64/23,81	Alu, +ABS, RHD
	5/02-				**PF832**		Ø 20,64/23,81	Alu, +ABS, LHD
	02-				**PZ096**	Fte	Ø 19,05	Pla, M/T
	02-				**PZ110**	Fte	Ø 19,05	M/T

MERCEDES BENZ

		Spare Parts	F/R	L/R	FRITECH ref.		DIMENSIONS mm.	NOTE
C 230 K. (203.747) Eng.M111.981 (145kW)	3/01-5/02				**PF837**	Ate	Ø 20,64/23,81	Alu, +ABS, RHD
	3/01-5/02				**PF832**		Ø 20,64/23,81	Alu, +ABS, LHD
	01-02				**PZ096**	Fte	Ø 19,05	Pla, M/T
	01-02				**PZ110**	Fte	Ø 19,05	M/T
C 270 Cdi Eng.OM612.962 (125kW)	00-07				**PF833**		Ø 20,64/25,40	Alu, +ABS
	00-07				**PZ096**	Fte	Ø 19,05	Pla, M/T
	00-07				**PZ110**	Fte	Ø 19,05	M/T
C 30 CDi AMG (203.718) Eng.OM612.990 (170kW)	9/02-				**PF833**		Ø 20,64/25,40	Alu, +ABS
C 320 (203.764) Eng.M112.946 (160kW)	9/02-				**PF833**		Ø 20,64/25,40	Alu, +ABS
	02-				**PZ096**	Fte	Ø 19,05	Pla, M/T
	02-				**PZ110**	Fte	Ø 19,05	M/T
C 350 (203.756) Eng.M272.960 (200kW)	05-				**PZ096**	Fte	Ø 19,05	Pla, M/T
	05-				**PZ110**	Fte	Ø 19,05	M/T
C 55 AMG Eng.M113.988 (270kW)	04-07				**PF833**		Ø 20,64/25,40	Alu, +ABS
Classe C II SW (S203) 3/01-12/06								
C 180 (203.235) Eng.M111.951 (95kW)	3/01-5/02				**PF837**	Ate	Ø 20,64/23,81	Alu, +ABS, RHD
	3/01-5/02				**PF832**		Ø 20,64/23,81	Alu, +ABS, LHD
	01-				**PZ096**	Fte	Ø 19,05	Pla, M/T
	01-				**PZ110**	Fte	Ø 19,05	M/T
C 180 K. (203.246) Eng.M271.946 (105kW)	5/02-				**PF837**	Ate	Ø 20,64/23,81	Alu, +ABS, RHD
	5/02-				**PF832**		Ø 20,64/23,81	Alu, +ABS, LHD
	5/02-				**PZ096**	Fte	Ø 19,05	Pla, M/T
	5/02-				**PZ110**	Fte	Ø 19,05	M/T
C 200 CDi Eng.OM646.962 (75kW)	3/01-				**PF837**	Ate	Ø 20,64/23,81	Alu, +ABS, RHD
	3/01-				**PF832**		Ø 20,64/23,81	Alu, +ABS, LHD
	01-				**PZ096**	Fte	Ø 19,05	Pla, M/T
	01-				**PZ110**	Fte	Ø 19,05	M/T
C 200 CDi (203.204) Eng.OM611.962 (85kW)	3/01-				**PF837**	Ate	Ø 20,64/23,81	Alu, +ABS, RHD
	3/01-				**PF832**		Ø 20,64/23,81	Alu, +ABS, LHD
	01-				**PZ096**	Fte	Ø 19,05	Pla, M/T
	01-				**PZ110**	Fte	Ø 19,05	M/T
C 200 CDi (203.207) Eng.OM646.962 (90kW)	4/03-				**PF837**	Ate	Ø 20,64/23,81	Alu, +ABS, RHD
	4/03-				**PF832**		Ø 20,64/23,81	Alu, +ABS, LHD
	03-				**PZ096**	Fte	Ø 19,05	Pla, M/T
	03-				**PZ110**	Fte	Ø 19,05	M/T
C 200 CGI K. (203.243) Eng.M271.942 (125kW)	7/03-				**PF837**	Ate	Ø 20,64/23,81	Alu, +ABS, RHD
	7/03-				**PF832**		Ø 20,64/23,81	Alu, +ABS, LHD
	03-				**PZ096**	Fte	Ø 19,05	Pla, M/T
	03-				**PZ110**	Fte	Ø 19,05	M/T
C 200 K. (203.242) Eng.M271.940 (120kW)	5/02-				**PF837**	Ate	Ø 20,64/23,81	Alu, +ABS, RHD
	5/02-				**PF832**		Ø 20,64/23,81	Alu, +ABS, LHD
	02-				**PZ096**	Fte	Ø 19,05	Pla, M/T
	02-				**PZ110**	Fte	Ø 19,05	M/T
C 200 K. (203.245) Eng.M111.955 (120kW)	3/01-5/02				**PF837**	Ate	Ø 20,64/23,81	Alu, +ABS, RHD
	3/01-5/02				**PF832**		Ø 20,64/23,81	Alu, +ABS, LHD
	01-				**PZ096**	Fte	Ø 19,05	Pla, M/T
	01-				**PZ110**	Fte	Ø 19,05	M/T
C 220 CDi (203.206) Eng.OM611.962 (105kW)	3/01-				**PF837**	Ate	Ø 20,64/23,81	Alu, +ABS, RHD
	3/01-				**PF832**		Ø 20,64/23,81	Alu, +ABS, LHD
	01-				**PZ096**	Fte	Ø 19,05	Pla, M/T
	01-				**PZ110**	Fte	Ø 19,05	M/T
C 220 CDi (203.208) Eng.OM646.963 (110kW)	2/04-				**PF837**	Ate	Ø 20,64/23,81	Alu, +ABS, RHD
	2/04-				**PF832**		Ø 20,64/23,81	Alu, +ABS, LHD
	04-				**PZ096**	Fte	Ø 19,05	Pla, M/T
	04-				**PZ110**	Fte	Ø 19,05	M/T
C 230 (203.252) Eng.M272.920 (150kW)	05-				**PF833**		Ø 20,64/25,40	Alu, +ABS
	05-				**PZ096**	Fte	Ø 19,05	Pla, M/T
	05-				**PZ110**	Fte	Ø 19,05	M/T
C 230 K. (203.240) Eng.M271.948 (141kW)	2/04-				**PF837**	Ate	Ø 20,64/23,81	Alu, +ABS, RHD
	2/04-				**PF832**		Ø 20,64/23,81	Alu, +ABS, LHD
	04-				**PZ096**	Fte	Ø 19,05	Pla, M/T
	04-				**PZ110**	Fte	Ø 19,05	M/T
C 240 (203.261) Eng.M112.912 (125kW)	3/01-				**PF837**	Ate	Ø 20,64/23,81	Alu, +ABS, RHD
	3/01-				**PF832**		Ø 20,64/23,81	Alu, +ABS, LHD

		Spare Parts	F/R	L/R	FRITECH ref.		DIMENSIONS mm.	NOTE
C 240 (203.261) Eng.M112.912 (125kW)	3/01-				**PF634**		Ø 19,05/23,81	Alu, +ESP
	01-				**PZ096**	Fte	Ø 19,05	Pla, M/T
	01-				**PZ110**	Fte	Ø 19,05	M/T
C 240 4-matic (203.281) Eng.M112.916 (125kW)	7/02-				**PF833**		Ø 20,64/25,40	Alu, +ABS
C 270 CDi (203.216) Eng.OM612.962 (125kW)	3/01-				**PF833**		Ø 20,64/25,40	Alu, +ABS
	01-				**PZ096**	Fte	Ø 19,05	Pla, M/T
	01-				**PZ110**	Fte	Ø 19,05	M/T
C 280 Eng.M272.940 (170kW)	05-				**PF833**		Ø 20,64/25,40	Alu, +ABS
C 300 CDi AMG (203.218) Eng.OM612.990 (170kW)	1/03-				**PF833**		Ø 20,64/25,40	Alu, +ABS
C 32 AMG K. (203.265) Eng.M112.961 (260kW)	3/01-				**PF833**		Ø 20,64/25,40	Alu, +ABS
C 320 (203.264) Eng.M112.946 (160kW)	3/01-				**PF833**		Ø 20,64/25,40	Alu, +ABS
	01-				**PZ096**	Fte	Ø 19,05	Pla, M/T
	01-				**PZ110**	Fte	Ø 19,05	M/T
C 320 4-matic (203.284) Eng.M112.953 (160kW)	7/02-				**PF833**		Ø 20,64/25,40	Alu, +ABS
C 320 CDi (203.220) Eng.OM642.910 (165kW)	05-				**PF833**		Ø 20,64/25,40	Alu, +ABS
C 350 (203.256) Eng.M272.960 (200kW)	05-				**PF833**		Ø 20,64/25,40	Alu, +ABS
	05-				**PZ096**	Fte	Ø 19,05	Pla, M/T
	05-				**PZ110**	Fte	Ø 19,05	M/T
C 350 4-matic Eng.M272.970 (200kW)	05-				**PF833**		Ø 20,64/25,40	Alu, +ABS
C 55 AMG (203.276) Eng.M113.988 (270kW)	2/04-				**PF833**		Ø 20,64/25,40	Alu, +ABS
Classe E I (W124) 6/93-6/95								
E 200 (124.019) Eng.M111.940 (100kW)	94-6/95				**PF610**	Trw	Ø 19,05/23,81	Alu, RWD
	93-95				**PF158**		Ø 23,81	Alu
	93-				**CZ016**		Ø 23,81	Ch -0031301
	-95				**CZ017**		Ø 23,81	Ch 0031302-
	93-95				**PZ023**		Ø 19,05	Alu
	93-95				**PZ113**		Ø 19,05	
E 200 D (124.120) Eng.OM601.912 (55kW)	94-6/95				**PF610**	Trw	Ø 19,05/23,81	Alu, RWD
	93-6/95				**PF158**		Ø 23,81	Alu
	10/93-				**CZ017**		Ø 23,81	
	-9/93				**CZ016**		Ø 23,81	
	93-95				**PZ023**		Ø 19,05	Alu
	93-95				**PZ113**		Ø 19,05	
E 220 (124.022) Eng.M111.960 (110kW)	94-6/95				**PF610**	Trw	Ø 19,05/23,81	Alu, RWD
	93-95				**PF158**		Ø 23,81	Alu
	93-95				**CZ017**		Ø 23,81	
	93-95				**PZ023**		Ø 19,05	Alu
	93-95				**PZ113**		Ø 19,05	
E 250 D (124.126/.129) Eng.OM605.911 (83kW)	94-6/95				**PF610**	Trw	Ø 19,05/23,81	Alu, RWD
	93-95				**PF158**		Ø 23,81	Alu
	93-95				**CZ017**		Ø 23,81	
	93-95				**PZ023**		Ø 19,05	Alu
	93-95				**PZ113**		Ø 19,05	
E 250 TD (124.128) Eng.OM602.962 (93kW)	94-6/95				**PF610**	Trw	Ø 19,05/23,81	Alu, RWD
	93-95				**PF158**		Ø 23,81	Alu
	93-95				**CZ017**		Ø 23,81	
	93-95				**PZ023**		Ø 19,05	Alu
	93-95				**PZ113**		Ø 19,05	
E 280 (124.028) Eng.M104.942 (145kW)	94-6/95				**PF610**	Trw	Ø 19,05/23,81	Alu, RWD
	93-95				**PF158**		Ø 23,81	Alu
	93-95				**CZ017**		Ø 23,81	
	93-95				**PZ023**		Ø 19,05	Alu
	93-95				**PZ113**		Ø 19,05	
E 280 lungo (124.029) Eng.M104.942 (142kW)	94-6/95				**PF610**	Trw	Ø 19,05/23,81	Alu, RWD
	93-95				**PF158**		Ø 23,81	Alu
E 300 (124.030) Eng.M103.983 (132kW)	94-6/95				**PF610**	Trw	Ø 19,05/23,81	Alu, RWD
E 300 4-matic (124.230) Eng.M103.985 (132kW)	94-6/95				**PF610**	Trw	Ø 19,05/23,81	Alu, RWD
	93-95				**PF158**		Ø 23,81	Alu
	93-95				**CZ017**		Ø 23,81	
	93-95				**PZ023**		Ø 19,05	Alu
	93-95				**PZ113**		Ø 19,05	
E 300 D (124.131) Eng.OM606.910 (100kW)	93-95				**PF158**		Ø 23,81	Alu
	93-95				**CZ017**		Ø 23,81	
	93-95				**PZ023**		Ø 19,05	Alu

MERCEDES BENZ

		Spare Parts	F/R	L/R	FRITECH ref.		DIMENSIONS mm.	NOTE
E 300 D (124.131) Eng.OM606.910 (100kW)	93-95				**PZ113**		Ø 19,05	
E 300 TD (124.133) Eng.OM603.960 (108kW)	94-6/95				**PF610**	Trw	Ø 19,05/23,81	Alu, RWD
	93-95				**PF158**		Ø 23,81	Alu
	93-95				**CZ017**		Ø 23,81	
	93-95				**PZ023**		Ø 19,05	Alu
	93-95				**PZ113**		Ø 19,05	
E 300 TD 4-matic (124.333) Eng.OM603.963	94-6/95				**PF610**	Trw	Ø 19,05/23,81	Alu, RWD
(108kW)	93-95				**PF158**		Ø 23,81	Alu
	93-95				**CZ017**		Ø 23,81	
	93-95				**PZ023**		Ø 19,05	Alu
	93-95				**PZ113**		Ø 19,05	
E 320 (124.032) Eng.M104.992 (162kW)	94-6/95				**PF610**	Trw	Ø 19,05/23,81	Alu, RWD
	93-95				**PF158**		Ø 23,81	Alu
	93-95				**CZ017**		Ø 23,81	
	93-95				**PZ023**		Ø 19,05	Alu
	93-95				**PZ113**		Ø 19,05	
E 420 (124.034) Eng.M119.975 (205kW)	94-95				**PF655**	Trw	Ø 19,05/25,4	Alu
	93-6/95				**PF157**		Ø 25,40/19,05	Alu
E 500 (124.036) Eng.M119.974 (235kW)	93-6/95				**PF158**		Ø 23,81	Alu
Classe E I Cabrio (A124) 6/93-3/98								
E 200 (124.060) Eng.M111.940 (100kW)	94-6/95				**PF610**	Trw	Ø 19,05/23,81	Alu, RWD
	93-98				**PF158**		Ø 23,81	Alu
	93-				**CZ016**		Ø 23,81	Ch -0031301
					CZ017		Ø 23,81	Ch 0031302-
	93-98				**PZ023**		Ø 19,05	Alu
	93-98				**PZ113**		Ø 19,05	
E 220 (124.062) Eng.M111.960 (110kW)	94-6/95				**PF610**	Trw	Ø 19,05/23,81	Alu, RWD
	93-6/97				**PF158**		Ø 23,81	Alu
	93-97				**CZ017**		Ø 23,81	
	93-97				**PZ023**		Ø 19,05	Alu
	93-97				**PZ113**		Ø 19,05	
E 300 (124.061)	94-6/95				**PF610**	Trw	Ø 19,05/23,81	Alu, RWD
E 320 (124.066) Eng.M104.992/ 995 (162kW)	94-6/95				**PF610**	Trw	Ø 19,05/23,81	Alu, RWD
	93-6/97				**PF158**		Ø 23,81	Alu
	93-97				**CZ017**		Ø 23,81	
	93-97				**PZ023**		Ø 19,05	Alu
	93-97				**PZ113**		Ø 19,05	
E 36 AMG (124.066) Eng.M104.992(AMG3.6)	94-97				**CZ017**		Ø 23,81	
(200kW)	94-97				**PZ023**		Ø 19,05	Alu
	94-97				**PZ113**		Ø 19,05	
Classe E I Coupe (C124) 6/93-6/97								
E 200 (124.040) Eng.M111.940 (100kW)	94-6/95				**PF610**	Trw	Ø 19,05/23,81	Alu, RWD
	93-6/97				**PF158**		Ø 23,81	Alu
	93-				**CZ016**		Ø 23,81	Ch -0031301
	-95				**CZ017**		Ø 23,81	Ch 0031302-
	93-97				**PZ023**		Ø 19,05	Alu
	93-97				**PZ113**		Ø 19,05	
E 220 (124.042) Eng.M111.960 (110kW)	94-6/95				**PF610**	Trw	Ø 19,05/23,81	Alu, RWD
	93-6/97				**PF158**		Ø 23,81	Alu
	93-97				**CZ017**		Ø 23,81	
	93-97				**PZ023**		Ø 19,05	Alu
	93-97				**PZ113**		Ø 19,05	
E 320 (124.052) Eng.M104.992 (162kW)	94-6/95				**PF610**	Trw	Ø 19,05/23,81	Alu, RWD
	93-6/97				**PF158**		Ø 23,81	Alu
	93-97				**CZ017**		Ø 23,81	
	93-97				**PZ023**		Ø 19,05	Alu
	93-97				**PZ113**		Ø 19,05	
E 36 AMG (124.052) Eng.M104.992(AMG3.6)	94-97				**CZ017**		Ø 23,81	
(195-200kW)	94-97				**PZ023**		Ø 19,05	Alu
	94-97				**PZ113**		Ø 19,05	
Classe E I SW (S124) 6/93-6/96								
E 200 (124.079) Eng.M111.940 (100kW)	94-6/95				**PF610**	Trw	Ø 19,05/23,81	Alu, RWD
	93-96				**PF158**		Ø 23,81	Alu
	93-				**CZ016**		Ø 23,81	Ch -0031301

		Spare Parts	F/R	L/R	FRITECH ref.		DIMENSIONS mm.	NOTE
E 200 (124.079) Eng.M111.940 (100kW)	-96				**CZ017**		Ø 23,81	Ch 0031302-
	93-96				**PZ023**		Ø 19,05	Alu
	93-96				**PZ113**		Ø 19,05	
E 220 (124.082) Eng.M111.960 (110kW)	94-6/95				**PF610**	Trw	Ø 19,05/23,81	Alu, RWD
	93-96				**PF158**		Ø 23,81	Alu
	93-96				**CZ017**		Ø 23,81	
	93-96				**PZ023**		Ø 19,05	Alu
	93-96				**PZ113**		Ø 19,05	
E 250 D (124.186) Eng.OM605.911 (83kW)	94-6/95				**PF610**	Trw	Ø 19,05/23,81	Alu, RWD
	93-5/96				**PF158**		Ø 23,81	Alu
	93-96				**CZ017**		Ø 23,81	
	93-96				**PZ023**		Ø 19,05	Alu
	93-96				**PZ113**		Ø 19,05	
E 250 TD Eng.OM602.962 (93kW)	94-6/95				**PF610**	Trw	Ø 19,05/23,81	Alu, RWD
	93-5/96				**PF158**		Ø 23,81	Alu
	93-96				**CZ017**		Ø 23,81	
	93-96				**PZ023**		Ø 19,05	Alu
	93-96				**PZ113**		Ø 19,05	
E 280 (124.088) Eng.M104.942 (142-145kW)	94-6/95				**PF610**	Trw	Ø 19,05/23,81	Alu, RWD
	93-5/96				**PF158**		Ø 23,81	Alu
	93-96				**CZ017**		Ø 23,81	
	93-96				**PZ023**		Ø 19,05	Alu
	93-96				**PZ113**		Ø 19,05	
E 300 4-matic (124.290) Eng.M103.985 (132kW)	94-6/95				**PF610**	Trw	Ø 19,05/23,81	Alu, RWD
	93-5/96				**PF158**		Ø 23,81	Alu
	93-95				**CZ017**		Ø 23,81	
	93-95				**PZ023**		Ø 19,05	Alu
	93-95				**PZ113**		Ø 19,05	
E 300 D (124.191) Eng.OM606.910 (100kW)	93-5/96				**PF158**		Ø 23,81	Alu
	93-96				**CZ017**		Ø 23,81	
	93-96				**PZ023**		Ø 19,05	Alu
	93-96				**PZ113**		Ø 19,05	
E 300 TD (124.193) Eng.OM603.960 (108kW)	94-6/95				**PF610**	Trw	Ø 19,05/23,81	Alu, RWD
	93-5/96				**PF158**		Ø 23,81	Alu
	93-96				**CZ017**		Ø 23,81	
	93-96				**PZ023**		Ø 19,05	Alu
	93-96				**PZ113**		Ø 19,05	
E 300 TD 4-matic (124.393) Eng.OM603.963 (108kW)	94-6/95				**PF610**	Trw	Ø 19,05/23,81	Alu, RWD
	93-5/96				**PF158**		Ø 23,81	Alu
	93-96				**CZ017**		Ø 23,81	
	93-96				**PZ023**		Ø 19,05	Alu
	93-96				**PZ113**		Ø 19,05	
E 300 TE-24 AMG (124.091) Eng.M104.980 (162kW)	94-6/95				**PF610**	Trw	Ø 19,05/23,81	Alu, RWD
E 320 (124.092) Eng.M104.992 (162kW)	94-6/95				**PF610**	Trw	Ø 19,05/23,81	Alu, RWD
	93-96				**PF158**		Ø 23,81	Alu
	93-96				**CZ017**		Ø 23,81	
	93-96				**PZ023**		Ø 19,05	Alu
	93-96				**PZ113**		Ø 19,05	
E 36 AMG (124.092) Eng.M104.992(AMG3.6) (200kW)	94-96				**CZ017**		Ø 23,81	
	94-96				**PZ023**		Ø 19,05	Alu
	94-96				**PZ113**		Ø 19,05	
Classe E II (W210) 6/95-3/02								
E 200 (210.035) Eng.M111.942 (100kW)	95-				**PF626**	Ate	Ø 19,05/23,81	Ch -A394035, Alu
					PF830		Ø 19,05/23,81	Ch A394036-, Alu
	95-00				**CZ017**		Ø 23,81	
	95-00				**PZ023**		Ø 19,05	Alu
	95-00				**PZ113**		Ø 19,05	
E 200 CDi (210.007) Eng.OM611.961 (75kW)	6/98-				**PF830**		Ø 19,05/23,81	Alu
	98-99				**CZ017**		Ø 23,81	
	98-99				**PZ023**		Ø 19,05	Alu
	98-99				**PZ113**		Ø 19,05	
E 200 CDi (210.007) Eng.OM611.961 (85kW)	7/99-				**PF830**		Ø 19,05/23,81	Alu

MERCEDES BENZ

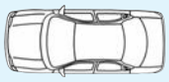		Spare Parts	F/R	L/R	FRITECH ref.		DIMENSIONS mm.	NOTE
E 200 D (210.003) Eng.OM604.917 (65kW)	96-02				**CZ017**		Ø 23,81	
	96-02				**PZ023**		Ø 19,05	Alu
	96-02				**PZ113**		Ø 19,05	
E 200 K. (210.045) Eng.M111.947 (137kW)	6/97-				**PF653**	Trw	Ø 19,05/25,4	Alu
	97-02				**CZ017**		Ø 23,81	
	97-02				**PZ023**		Ø 19,05	Alu
	97-02				**PZ113**		Ø 19,05	
E 200 K. (210.048) Eng.M111.957 (120kW)	8/00-				**PF653**	Trw	Ø 19,05/25,4	Alu
E 220 CDi (210.006) Eng.OM611.961 (105kW)	7/99-				**PF830**		Ø 19,05/23,81	Alu
E 220 CDi (210.006) Eng.OM611.961 (92kW)	6/98-				**PF830**		Ø 19,05/23,81	Alu
	98-99				**CZ017**		Ø 23,81	
	98-99				**PZ023**		Ø 19,05	Alu
	98-99				**PZ113**		Ø 19,05	
E 220 D (210.004) Eng.OM604.912 (55-70kW)	6/95-				**PF626**	Ate	Ø 19,05/23,81	Ch -A394035, Alu
					PF830		Ø 19,05/23,81	Ch A394036-, Alu
	95-02				**CZ017**		Ø 23,81	
	95-02				**PZ023**		Ø 19,05	Alu
	95-02				**PZ113**		Ø 19,05	
E 230 (210.037) Eng.M111.970 (110kW)	6/95-				**PF626**	Ate	Ø 19,05/23,81	Alu
	95-97				**CZ017**		Ø 23,81	
	95-97				**PZ023**		Ø 19,05	Alu
	95-97				**PZ113**		Ø 19,05	
E 240 (210.061) Eng.M112.911 (125kW)	6/97-				**PF653**	Trw	Ø 19,05/25,4	Alu, +ESP
	6/97-				**PF830**		Ø 19,05/23,81	Alu, -ESP
	97-				**CZ017**		Ø 23,81	
	97-				**PZ023**		Ø 19,05	Alu
	97-				**PZ113**		Ø 19,05	
E 250 D (210.010) Eng.OM605.912 (83kW)	6/95-				**PF626**	Ate	Ø 19,05/23,81	Ch -A394035, Alu
	97-				**PF653**	Trw	Ø 19,05/25,4	Alu
					PF830		Ø 19,05/23,81	Ch A394036-, Alu
	95-99				**CZ017**		Ø 23,81	
	95-99				**PZ023**		Ø 19,05	Alu
	95-99				**PZ113**		Ø 19,05	
E 250 TD (210.015) Eng.OM605.962 (110kW)	6/97-				**PF830**		Ø 19,05/23,81	Alu
	97-99				**CZ017**		Ø 23,81	
	97-99				**PZ023**		Ø 19,05	Alu
	97-99				**PZ113**		Ø 19,05	
E 260 (210.062) Eng.M112.914 (125kW)	8/00-				**PF653**	Trw	Ø 19,05/25,4	Alu, +ESP
	8/00-				**PF830**		Ø 19,05/23,81	Alu, -ESP
E 270 CDi (210.016) Eng.OM612.961 (125kW)	99-				**PF653**	Trw	Ø 19,05/25,4	Alu
E 280 (210.053) Eng.M104.945 (142kW)	96-				**PF653**	Trw	Ø 19,05/25,4	Alu
	96-				**CZ017**		Ø 23,81	
	96-				**PZ023**		Ø 19,05	Alu
	96-				**PZ113**		Ø 19,05	
E 280 (210.063) Eng.M112.921 (150kW)	96-				**PF653**	Trw	Ø 19,05/25,4	Alu
	96-				**CZ017**		Ø 23,81	
	96-				**PZ023**		Ø 19,05	Alu
	96-				**PZ113**		Ø 19,05	
E 280 4-matic (210.081) Eng.M112.921 (150kW)	96-				**PF653**	Trw	Ø 19,05/25,4	Alu
	96-				**CZ017**		Ø 23,81	
	96-				**PZ023**		Ø 19,05	Alu
	96-				**PZ113**		Ø 19,05	
E 290 TD (210.017) Eng.OM602.982 (95kW)	3/96-				**PF626**	Ate	Ø 19,05/23,81	Ch -A394035, Alu
					PF830		Ø 19,05/23,81	Ch A394036-, Alu
	96-99				**CZ017**		Ø 23,81	
	96-99				**PZ023**		Ø 19,05	Alu
	96-99				**PZ113**		Ø 19,05	
E 300 D (210.020) Eng.OM606.912 (100kW)	6/95-				**PF626**	Ate	Ø 19,05/23,81	Ch -A394035, Alu
	97-				**PF653**	Trw	Ø 19,05/25,4	Alu
					PF830		Ø 19,05/23,81	Ch A394036-, Alu
	95-97				**CZ017**		Ø 23,81	
	95-97				**PZ023**		Ø 19,05	Alu
	95-97				**PZ113**		Ø 19,05	

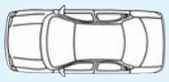		Spare Parts	F/R	L/R	FRITECH ref.		DIMENSIONS mm.	NOTE
E 300 TD (210.025) Eng.OM606.962 (130kW)	12/96-				**PF653**	Trw	Ø 19,05/25,4	Alu
E 320 (210.055) Eng.M104.992/ 995 (162kW)	95-97				**PF654**	Trw	Ø 19,05/25,4	Ch F102745-, Alu
	95-				**PF653**	Trw	Ø 19,05/25,4	Alu
E 320 (210.065) Eng.M112.941 (165kW)	97-02				**PF654**	Trw	Ø 19,05/25,4	Ch F102745-, Alu
	97-				**PF653**	Trw	Ø 19,05/25,4	Alu
E 320 4-matic (210.082) Eng.M112.941 (165kW)	97-02				**PF654**	Trw	Ø 19,05/25,4	Ch F102745-, Alu
	97-				**PF653**	Trw	Ø 19,05/25,4	Alu
E 320 CDi (210.026) Eng.OM613.961 (145kW)	99-				**PF653**	Trw	Ø 19,05/25,4	Alu
E 420 (210.072) Eng.M119.985 (205kW)	96-97				**PF654**	Trw	Ø 19,05/25,4	Ch F102745-, Alu
E 430 (210.070) Eng.M113.940 (205kW)	97-				**PF653**	Trw	Ø 19,05/25,4	Alu
	97-02				**PF627**	Trw	Ø 22,20/25,4	Alu
E 430 4-matic (210.083) Eng.M113.940 (205kW)	99-				**PF653**	Trw	Ø 19,05/25,4	Alu
	99-02				**PF627**	Trw	Ø 22,20/25,4	Alu
E 50 AMG (210.072) Eng.M119.985 (255kW)	96-97				**PF654**	Trw	Ø 19,05/25,4	Ch F102745-, Alu
E 55 AMG (210.074) Eng.M113.980 (260kW)	97-				**PF653**	Trw	Ø 19,05/25,4	Alu
	99-02				**PF627**	Trw	Ø 22,20/25,4	Alu
E 55 AMG 4-matic (210.083) Eng.M113.980 (260kW)	01-				**PF653**	Trw	Ø 19,05/25,4	Alu
Classe E II SW (S210) 6/96-3/03								
E 200 (210.235) Eng.M111.942 (100kW)	6/95-				**PF626**	Ate	Ø 19,05/23,81	Ch -A394035, Alu
					PF830		Ø 19,05/23,81	Ch A394036-, Alu
	96-00				**CZ017**		Ø 23,81	
	96-00				**PZ023**		Ø 19,05	Alu
	96-00				**PZ113**		Ø 19,05	
E 200 K. (210.245) Eng.M111.947 (137kW)	97-				**PF653**	Trw	Ø 19,05/25,4	Alu
	97-				**CZ017**		Ø 23,81	
	97-				**PZ023**		Ø 19,05	Alu
	97-				**PZ113**		Ø 19,05	
E 200 K. (210.248) Eng.M111.957 (120kW)	8/00-				**PF653**	Trw	Ø 19,05/25,4	Alu
E 220 CDi Eng.OM611.961 (92kW)	6/98-				**PF653**	Trw	Ø 19,05/25,4	Alu, +ESP
	6/98-				**PF830**		Ø 19,05/23,81	Alu, -ESP
E 220 CDi (210.006) Eng.OM611.961 (105kW)	7/99-				**PF653**	Trw	Ø 19,05/25,4	Alu, +ESP
	7/99-				**PF830**		Ø 19,05/23,81	Alu, -ESP
E 230 (210.237) Eng.M111.970 (110kW)	6/95-				**PF626**	Ate	Ø 19,05/23,81	Ch -A394035, Alu
					PF830		Ø 19,05/23,81	Ch A394036-, Alu
	96-97				**CZ017**		Ø 23,81	
	96-97				**PZ023**		Ø 19,05	Alu
	96-97				**PZ113**		Ø 19,05	
E 240 (210.261) Eng.M112.911 (125kW)	6/97-				**PF653**	Trw	Ø 19,05/25,4	Alu, +ESP
	6/97-				**PF830**		Ø 19,05/23,81	Alu, -ESP
	97-				**CZ017**		Ø 23,81	
	97-				**PZ023**		Ø 19,05	Alu
	97-				**PZ113**		Ø 19,05	
E 250 D (210.210) Eng.OM605.912 (83kW)	6/95-				**PF626**	Ate	Ø 19,05/23,81	Ch -A394035, Alu
					PF653	Trw	Ø 19,05/25,4	Ch A394036-, Alu
	96-99				**PF654**	Trw	Ø 19,05/25,4	Ch F102745-, Alu
	96-99				**CZ017**		Ø 23,81	
	96-99				**PZ023**		Ø 19,05	Alu
	96-99				**PZ113**		Ø 19,05	
E 250 TD (210.215) Eng.OM605.962 (110kW)	6/97-				**PF653**	Trw	Ø 19,05/25,4	Alu
	97-99				**CZ017**		Ø 23,81	
	97-99				**PZ023**		Ø 19,05	Alu
	97-99				**PZ113**		Ø 19,05	
E 260 (210.262) Eng.M112.914 (125kW)	8/00-				**PF653**	Trw	Ø 19,05/25,4	Alu, +ESP
	8/00-				**PF830**		Ø 19,05/23,81	Alu, -ESP
E 270 CDi (210.216) Eng.OM612.961 (125kW)	7/99-				**PF653**	Trw	Ø 19,05/25,4	Alu
E 280 (210.263) Eng.M112.921 (150kW)	12/96-				**PF653**	Trw	Ø 19,05/25,4	Alu
	96-				**CZ017**		Ø 23,81	
	96-				**PZ023**		Ø 19,05	Alu
	96-				**PZ113**		Ø 19,05	
E 280 4-matic (210.281) Eng.M112.921 (150kW)	12/96-				**PF653**	Trw	Ø 19,05/25,4	Alu
	96-				**CZ017**		Ø 23,81	
	96-				**PZ023**		Ø 19,05	Alu
	96-				**PZ113**		Ø 19,05	

MERCEDES BENZ

		Spare Parts	F/R	L/R	FRITECH ref.		DIMENSIONS mm.	NOTE
E 290 TD (210.217) Eng.OM602.982 (95kW)	6/95-				**PF626**	Ate	Ø 19,05/23,81	Ch -A394035, Alu
					PF653	Trw	Ø 19,05/25,4	Ch A394036-, Alu
	96-99				**PF654**	Trw	Ø 19,05/25,4	Ch F102745-, Alu
	96-99				**CZ017**		Ø 23,81	
	96-99				**PZ023**		Ø 19,05	Alu
	96-99				**PZ113**		Ø 19,05	
E 300 TD (210.225) Eng.OM606.962 (130kW)	12/96-				**PF653**	Trw	Ø 19,05/25,4	Alu
E 320 (210.265) Eng.M112.941 (165kW)	96-				**PF653**	Trw	Ø 19,05/25,4	Alu
E 320 4-matic (210.282) Eng.M112.941 (165kW)	96-				**PF653**	Trw	Ø 19,05/25,4	Alu
E 320 CDi (210.226) Eng.OM613.961 (145kW)	7/99-				**PF653**	Trw	Ø 19,05/25,4	Alu
E 420 (210.272) Eng.M119.985 (205kW)	96-97				**PF654**	Trw	Ø 19,05/25,4	Ch F102745-, Alu
E 430 (210.270) Eng.M113.940 (205kW)	97-03				**PF654**	Trw	Ø 19,05/25,4	Ch F102745-, Alu
	97-				**PF653**	Trw	Ø 19,05/25,4	Alu
E 430 4-matic (210.283) Eng.M113.940 (205kW)	99-				**PF653**	Trw	Ø 19,05/25,4	Alu
E 55 AMG (210.274) Eng.M113.980 (260kW)	97-				**PF653**	Trw	Ø 19,05/25,4	Alu
E 55 AMG 4-matic (210.283) Eng.M113.980 (260kW)	3/01-				**PF653**	Trw	Ø 19,05/25,4	Alu
Classe G (W460) 3/79-7/93								
230 (460,2) Eng.M102.979/ 987 (90kW)	87-92		R		**CF283**		Ø 17,46	
	90-				**CZ016**		Ø 23,81	
230 (460,2) Eng.M102.981/ 987 (92kW)	82-92		R		**CF283**		Ø 17,46	
	90-				**CZ017**		Ø 23,81	
230 (460,2) Eng.M115.973 (66kW)	89-93		R		**CF283**		Ø 17,46	
230 (460,2) Eng.M115.973 (75kW)	80-87		R		**CF283**		Ø 17,46	
240 (460,3) Eng.OM616.936 (53kW)	79-87		R		**CF283**		Ø 17,46	
250 (460,3) Eng.OM602.930 (62-68kW)	87-92		R		**CF283**		Ø 17,46	
	87-				**CZ016**		Ø 23,81	W460, W461
280 (460,2) Eng.M110.994 (110-115kW)	79-89		R		**CF283**		Ø 17,46	
300 (460.3) Eng.OM603.912 (83kW)	79-93		R		**CF283**		Ø 17,46	
	89-				**CZ017**		Ø 23,81	
300 (460.3) Eng.OM617.931 (65kW)	79-91		R		**CF283**		Ø 17,46	
Classe G (W461) 2/90-								
230 (461) Eng.M102.996 (92kW)	93-		R		**CF283**		Ø 17,46	
	93-				**CZ016**		Ø 23,81	
230 (461.238/.239) Eng.M102.979 (90kW)	93-		R		**CF283**		Ø 17,46	
	93-				**CZ016**		Ø 23,81	
250 (461) Eng.OM602.939 (68kW)	90-		R		**CF283**		Ø 17,46	
	90-				**CZ016**		Ø 23,81	
290 D (461.337/.338) Eng.OM602.942 (70kW)	93-		R		**CF283**		Ø 17,46	
	92-				**CZ016**		Ø 23,81	
290 TD (461.335/.336) Eng.OM602.983 (88kW)	97-		R		**CF283**		Ø 17,46	
	97-				**CZ016**		Ø 23,81	
300 CDi Eng.OM642.884 (135kW)	10-		R		**CF283**		Ø 17,46	
	10-				**PF635**	Luc	Ø 25,40	Alu
Classe G (W463) 9/89-								
230 (463.224/.225) Eng.M102.989 (92-93kW)	90-				**CZ017**		Ø 23,81	
250 (463) Eng.OM602.931 (69kW)	90-				**CZ017**		Ø 23,81	W463
300 (463.227/.228) Eng.M103.987 (125-128kW)	90-				**CZ017**		Ø 23,81	
300 (463.327/.328) Eng.OM603.931 (83kW)	89-				**CZ017**		Ø 23,81	
500 (463.228) Eng.M117.965 (177kW)	93-				**CZ017**		Ø 23,81	
Classe G Cabrio (W463) 9/89-								
230 (463.204) Eng.M102.989 (93-92kW)	90-93				**CZ017**		Ø 23,81	
300 (463.207) Eng.M103.987 (125kW)	89-97				**CZ017**		Ø 23,81	
300 (463.307) Eng.OM603.931 (83kW)	90-97				**CZ017**		Ø 23,81	
Classe M I (W163) 2/98-6/05								
ML 230 (163.136) Eng.M111.977 (110kW)	98-05				**PF829**	Ate	Ø 25,40	Alu, +ESP
	98-05				**PF828**	Ate	Ø 25,40	Alu, -ESP
	98-				**CZ017**		Ø 23,81	
	98-				**PZ023**		Ø 19,05	Alu
	98-				**PZ113**		Ø 19,05	
ML 270 CDi (163.113) Eng.OM612.963 (120kW)	99-05				**PF829**	Ate	Ø 25,40	Alu, +ABS
	99-05				**PF828**	Ate	Ø 25,40	Alu, -ESP
	99-				**PZ023**		Ø 19,05	Alu
	99-				**PZ113**		Ø 19,05	

		Spare Parts	F/R	L/R	FRITECH ref.		DIMENSIONS mm.	NOTE
ML 320 (163.154) Eng.M112.942 (160kW)	98-02				**PF829**	Ate	Ø 25,40	Alu, +ABS
	98-02				**PF828**	Ate	Ø 25,40	Alu, -ESP
ML 350 Eng.M112.970 (173kW)	03-05				**PF829**	Ate	Ø 25,40	Alu, +ABS
	03-05				**PF828**	Ate	Ø 25,40	Alu, -ESP
ML 350 (163.157) Eng.M112.970 (180kW)	02-05				**PF829**	Ate	Ø 25,40	Alu, +ABS
	02-05				**PF828**	Ate	Ø 25,40	Alu, -ESP
ML 400 CDi (163.128) Eng.OM628.963 (184kW)	01-05				**PF829**	Ate	Ø 25,40	Alu, +ABS
	01-05				**PF828**	Ate	Ø 25,40	Alu, -ESP
ML 430 (163.172) Eng.M113.942 (200kW)	98-05				**PF829**	Ate	Ø 25,40	Alu, +ABS
	98-05				**PF828**	Ate	Ø 25,40	Alu, -ESP
ML 500 (163.175) Eng.M113.964/ 965 (215kW)	01-05				**PF829**	Ate	Ø 25,40	Alu, +ABS
	01-05				**PF828**	Ate	Ø 25,40	Alu, -ESP
ML 55 AMG (163.174) Eng.M113.981 (255kW)	00-05				**PF829**	Ate	Ø 25,40	Alu, +ABS
	00-05				**PF828**	Ate	Ø 25,40	Alu, -ESP
Classe S I (W108,W109) 1/66-8/72								
280 S (108.016) Eng.M130.920 (103kW)	67-72				**CZ018**		Ø 23,81	
280 SE,SEL (108.018/.019) Eng.M130.980 (118kW)	68-72				**CZ018**		Ø 23,81	
300 SEL (109.016) Eng.M130.981 (118kW)	68-72				**CZ018**		Ø 23,81	
Classe S II (W116) 8/72-7/80								
280 S (116.020) Eng.M110.922 (115-118kW)	-7/80				**PF124**	Luc	Ø 19,05	Ch 053430-
	72-80				**CZ018**		Ø 23,81	
280 SE,SEL (116.024/.025) Eng.M110.983/ 985	-7/80				**PF124**	Luc	Ø 19,05	Ch 053430-
(130-136kW)	72-80				**CZ018**		Ø 23,81	
350 SE,SEL (116.028/.029) Eng.M116.983 (147-151kW)	-76				**PF124**	Luc	Ø 19,05	Ch 029952-
350 SE,SEL (116.928) Eng.M116.985 (143kW)	-3/80				**PF124**	Luc	Ø 19,05	Ch 029952-
450 SE,SEL (116.032) Eng.M117.983/ 986 (165kW)	-9/80				**PF124**	Luc	Ø 19,05	Ch 043631-
450 SE,SEL (116.033) Eng.M117.985/ 986 (160kW)	-9/80				**PF124**	Luc	Ø 19,05	Ch 043631-
450 SEL 6.9 (116.036) Eng.M100.985 (210kW)	-9/80				**PF124**	Luc	Ø 19,05	Ch 043631-
Classe S III (W126) 10/79-6/91								
260 SE (126.020) Eng.M103.941 (118-122kW)	9/85-3/91				**PF157**		Ø 25,40/19,05	Alu
	85-91				**CZ016**		Ø 23,81	
	85-91				**PZ022**		Ø 19,05	
280 S (126.021) Eng.M110.926/ 924 (115kW)	1/80-				**PF124**	Luc	Ø 19,05	Ch -095332
	-7/85				**PF155**		Ø 25,40/19,05	Ch 095333-, Special body
	79-85				**CZ018**		Ø 23,81	
	79-85				**PZ022**		Ø 19,05	
280 SE,SEL (126.022/.023) Eng.M110.987/ 989	1/80-				**PF124**	Luc	Ø 19,05	Ch -095332
(136kW)	-7/85				**PF155**		Ø 25,40/19,05	Ch 095333-, Special body
	79-85				**CZ018**		Ø 23,81	
	79-85				**PZ022**		Ø 19,05	
300 SE,SEL (126.024/.025) Eng.M103.981(KAT)	9/85-3/91				**PF157**		Ø 25,40/19,05	Alu
(132kW)	85-91				**CZ016**		Ø 23,81	
	85-91				**PZ022**		Ø 19,05	
300 SE,SEL (126.041) Eng.M103.981 (138kW)	9/85-3/91				**PF157**		Ø 25,40/19,05	Alu
	85-91				**CZ016**		Ø 23,81	
	85-91				**PZ022**		Ø 19,05	
380 SE,SEL (126.032/.033) Eng.M116.961 (160kW)					**PF124**	Luc	Ø 19,05	Ch -048641
					PF155		Ø 25,40/19,05	Ch 048642-, Special body
	85-86				**CZ016**		Ø 23,81	
380 SE,SEL (126.032/.033) Eng.M116.963 (150kW)	1/80-				**PF124**	Luc	Ø 19,05	Ch -048641
	-7/85				**PF155**		Ø 25,40/19,05	Ch 048642-, Special body
	80-85				**CZ016**		Ø 23,81	
420 SE,SEL (126.034/.035) Eng.M116.965 (150-160-165-170kW)	9/85-3/91				**PF157**		Ø 25,40/19,05	Alu
500 SE,SEL (126.036/.037) Eng.M117.961/ 963	79-				**PF124**	Luc	Ø 19,05	Ch -036885
(170-177kW)	-7/85				**PF155**		Ø 25,40/19,05	Ch 036886-, Special body
	8/85-				**PF157**		Ø 25,40/19,05	Alu
500 SE,SEL (126.036/.037) Eng.M117.965 (164-180-185-195kW)					**PF124**	Luc	Ø 19,05	Ch -036885
					PF155		Ø 25,40/19,05	Ch 036886-, Special body
	9/85-3/91				**PF157**		Ø 25,40/19,05	Alu

MERCEDES BENZ

		Spare Parts	F/R	L/R	FRITECH ref.		DIMENSIONS mm.	NOTE
560 SE,SEL (126.038/.039) Eng.M117.968 (178-200-205-220kW)	9/85-3/91				**PF157**		Ø 25,40/19,05	Alu
Classe S III Coupe (C126) 10/81-6/91								
380 SEC (126.043) Eng.M116.963 (150kW)					**PF124**	Luc	Ø 19,05	Ch 029952-
	-7/85				**PF155**		Ø 25,40/19,05	Ch 095333-, Special body
420 SEC (126.046) Eng.M116.965 (150-160-165kW)					**PF157**		Ø 25,40/19,05	Ch -A212244, Alu
500 SEC (126.044) Eng.M117.963 (170-177kW)					**PF124**	Luc	Ø 19,05	Ch 029952-
	-7/85				**PF155**		Ø 25,40/19,05	Ch 095333-, Special body
					PF157		Ø 25,40/19,05	Ch -A212244, Alu
500 SEC (126.044) Eng.M117.965 (164-180-185-195kW)					**PF124**	Luc	Ø 19,05	Ch 029952-
					PF157		Ø 25,40/19,05	Ch -A212244, Alu
560 SEC (126.045) Eng.M117.968 (178-200-205-220kW)					**PF157**		Ø 25,40/19,05	Ch -A212244, Alu
Classe S IV (W140) 2/91-10/98								
S 280 (140.028) Eng.M104.944 (142-145kW)	93-98				**PF654**	Trw	Ø 19,05/25,4	Ch F102745-, Alu
	93-				**PF157**		Ø 25,40/19,05	Ch -A212244, Alu
	93-98				**CZ017**		Ø 23,81	
	93-98				**PZ023**		Ø 19,05	Alu
	93-98				**PZ113**		Ø 19,05	
S 300 SE,SEL Eng.M104.944 (145kW)	92-01				**PF654**	Trw	Ø 19,05/25,4	Ch F102745-, Alu
	91-98				**CZ017**		Ø 23,81	
S 300 SE,SEL (140.033) Eng.M104.994 (170kW)	4/91-6/93				**PF157**		Ø 25,40/19,05	Alu
S 300 TD (140.135) Eng.OM606.961 (130kW)	96-98				**PF654**	Trw	Ø 19,05/25,4	Ch F102745-, Alu
	96-98				**PF157**		Ø 25,40/19,05	Alu
S 320 SE,SEL (140.032) Eng.M104.990 (170kW)	93-				**PF157**		Ø 25,40/19,05	Ch -A212244, Alu
	91-98				**CZ017**		Ø 23,81	
	91-98				**PZ023**		Ø 19,05	Alu
	91-98				**PZ113**		Ø 19,05	
S 350 TD (140.134) Eng.OM603.971 (110kW)	93-98				**PF654**	Trw	Ø 19,05/25,4	Ch F102745-, Alu
	93-				**PF157**		Ø 25,40/19,05	Ch -A212244, Alu
S 400/420 (140.043) Eng.M119.971 (210kW)	91-98				**PF655**	Trw	Ø 19,05/25,4	Alu
Classe S V (W220) 10/98-9/05								
S 280 (220.063/.163) Eng.M112.922 (150kW)	98-05				**PF654**	Trw	Ø 19,05/25,4	Ch F102745-, Alu
S 320 (220.065/.165) Eng.M112.944 (165kW)	98-05				**PF654**	Trw	Ø 19,05/25,4	Ch F102745-, Alu
Classe V (638/2) 9/96-12/03								
200 (638.214) Eng.M111.948 (95kW)	97-				**PF244**		Ø 23,81	+ABS
	97-				**PF245**		Ø 23,81	-ABS
	2/97-				**CZ112**		Ø 22,20	
	2/97-				**PZ075**	Fte	Ø 19,05	
200 CDi (638.294) Eng.OM611.980 (75kW)	99-				**PF244**		Ø 23,81	+ABS
	99-				**PF245**		Ø 23,81	-ABS
	3/99-				**PZ075**	Fte	Ø 19,05	
220 CDi (638.294) Eng.OM611.980 (90kW)	3/99-				**PF244**		Ø 23,81	+ABS
	3/99-				**PF245**		Ø 23,81	-ABS
	3/99-				**PZ075**	Fte	Ø 19,05	
230 (638.234) Eng.M111.978 (105kW)	2/96-				**PF244**		Ø 23,81	+ABS
	2/96-				**PF245**		Ø 23,81	-ABS
	10/96-				**CZ112**		Ø 22,20	
	10/96-				**PZ075**	Fte	Ø 19,05	
230 TD (638.274) Eng.OM601.970 (72kW)	9/96-				**PF244**		Ø 23,81	+ABS
	9/96-				**PF245**		Ø 23,81	-ABS
	9/96-				**CZ112**		Ø 22,20	
	9/96-				**PZ075**	Fte	Ø 19,05	
280 (638.244) Eng.M104.900 (128kW)	97-				**PF244**		Ø 23,81	+ABS
	97-				**PF245**		Ø 23,81	-ABS
	8/97-				**CZ112**		Ø 22,20	
	8/97-				**PZ075**	Fte	Ø 19,05	
CLC (C204) 6/08-12/11								
160 Eng.M271.911 (95kW)	09-				**PF837**	Ate	Ø 20,64/23,81	Alu, +ABS, RHD
	09-				**PF832**		Ø 20,64/23,81	Alu, +ABS, LHD
	09-				**PZ096**	Fte	Ø 19,05	Pla
	09-				**PZ110**	Fte	Ø 19,05	

		Spare Parts	F/R	L/R	FRITECH ref.		DIMENSIONS mm.	NOTE
180 K Eng.M271.946 (105kW)	08-				**PF837**	Ate	Ø 20,64/23,81	Alu, +ABS, RHD
	08-				**PF832**		Ø 20,64/23,81	Alu, +ABS, LHD
	08-				**PZ096**	Fte	Ø 19,05	Pla
	08-				**PZ110**	Fte	Ø 19,05	
200 CDi Eng.OM646.962 (90kW)	08-				**PF837**	Ate	Ø 20,64/23,81	Alu, +ABS, RHD
	08-				**PF832**		Ø 20,64/23,81	Alu, +ABS, LHD
	08-				**PZ096**	Fte	Ø 19,05	Pla
	08-				**PZ110**	Fte	Ø 19,05	
200 K Eng.M271.940 (135kW)	08-				**PF837**	Ate	Ø 20,64/23,81	Alu, +ABS, RHD
	08-				**PF832**		Ø 20,64/23,81	Alu, +ABS, LHD
	08-				**PZ096**	Fte	Ø 19,05	Pla
	08-				**PZ110**	Fte	Ø 19,05	
220 CDi Eng.OM646.963 (110kW)	08-				**PF837**	Ate	Ø 20,64/23,81	Alu, +ABS, RHD
	08-				**PF832**		Ø 20,64/23,81	Alu, +ABS, LHD
	08-				**PZ096**	Fte	Ø 19,05	Pla
	08-				**PZ110**	Fte	Ø 19,05	
230 Eng.M272.920 (150kW)	08-				**PF833**		Ø 20,64/25,40	Alu, +ABS
	08-				**PZ096**	Fte	Ø 19,05	Pla
	08-				**PZ110**	Fte	Ø 19,05	
350 Eng.M272.960 (200kW)	08-				**PF833**		Ø 20,64/25,40	Alu, +ABS
	08-				**PZ096**	Fte	Ø 19,05	Pla
	08-				**PZ110**	Fte	Ø 19,05	
CLK I (C208) 6/97-6/02								
200 (208.335) Eng.M111.941/ 945 (100kW)	6/97-6/02				**PF634**		Ø 19,05/23,81	Alu, +ESP
	6/97-6/02				**PF633**		Ø 19,05/23,81	Alu, -ESP
	97-02				**CZ017**		Ø 23,81	
	97-				**PZ023**		Ø 19,05	Alu
	97-				**PZ113**		Ø 19,05	
200 K. (208.344) Eng.M111.956 (120kW)	00-02				**CZ017**		Ø 23,81	
	00-02				**PZ023**		Ø 19,05	Alu
	00-02				**PZ113**		Ø 19,05	
200 K. (208.345) Eng.M111.944 (132-141kW)	6/97-6/00				**PF634**		Ø 19,05/23,81	Alu, +ESP
	6/97-6/00				**PF633**		Ø 19,05/23,81	Alu, -ESP
	97-00				**CZ017**		Ø 23,81	
	97-				**PZ023**		Ø 19,05	Alu
	97-				**PZ113**		Ø 19,05	
230 K. (208.347) Eng.M111.973/ 975 (142kW)	6/97-6/00				**PF634**		Ø 19,05/23,81	Alu, +ESP
	6/97-6/00				**PF633**		Ø 19,05/23,81	Alu, -ESP
	97-00				**CZ017**		Ø 23,81	
	97-00				**PZ023**		Ø 19,05	Alu
	97-00				**PZ113**		Ø 19,05	
320 (208.365) Eng.M112.940 (160kW)	6/97-6/02				**PF634**		Ø 19,05/23,81	Alu, +ESP
	6/97-6/02				**PF633**		Ø 19,05/23,81	Alu, -ESP
430 (208.370) Eng.M113.943 (205kW)	98-02				**PF627**	Trw	Ø 22,20/25,4	Alu
55 AMG (208.374) Eng.M113.981/ .984 (255kW)	99-02				**PF627**	Trw	Ø 22,20/25,4	Alu
CLK I Cabrio (A208) 3/98-5/02								
200 (208.435) Eng.M111.941/ 945 (100kW)	3/98-				**PF634**		Ø 19,05/23,81	Alu, +ESP
	3/98-				**PF633**		Ø 19,05/23,81	Alu, -ESP
200 K. (208.445) Eng.M111.944 (132-141kW)	3/98-6/00				**PF634**		Ø 19,05/23,81	Alu, +ESP
	3/98-6/00				**PF633**		Ø 19,05/23,81	Alu, -ESP
230 K. (208.447) Eng.M111.973/ 975 (142kW)	3/98-6/00				**PF634**		Ø 19,05/23,81	Alu, +ESP
	3/98-6/00				**PF633**		Ø 19,05/23,81	Alu, -ESP
320 (208.465) Eng.M112.940 (160kW)	3/98-6/00				**PF634**		Ø 19,05/23,81	Alu, +ESP
	3/98-				**PF633**		Ø 19,05/23,81	Alu, -ESP
430 (208.470) Eng.M113.943 (205kW)	98-02				**PF627**	Trw	Ø 22,20/25,4	Alu
55 AMG (208.474) Eng.M113.981/ 984 (255kW)	00-02				**PF627**	Trw	Ø 22,20/25,4	Alu
CLK II (C209) 6/02-12/09								
200 CGI K. (209.343) Eng.M271.942 (125kW)	7/03-				**PF837**	Ate	Ø 20,64/23,81	Alu, +ABS, RHD
	7/03-				**PF832**		Ø 20,64/23,81	Alu, +ABS, LHD
	03-				**PZ096**	Fte	Ø 19,05	Pla, M/T
	03-				**PZ110**	Fte	Ø 19,05	M/T
200 K. (209.341) Eng.M271.940 (135kW)	1/07-				**PF837**	Ate	Ø 20,64/23,81	Alu, +ABS, RHD
	1/07-				**PF832**		Ø 20,64/23,81	Alu, +ABS, LHD

MERCEDES BENZ

		Spare Parts	F/R	L/R	FRITECH ref.		DIMENSIONS mm.	NOTE
200 K. (209.342) Eng.M271.940 (120kW)	9/02-				**PF837**	Ate	Ø 20,64/23,81	Alu, +ABS, RHD
	9/02-				**PF832**		Ø 20,64/23,81	Alu, +ABS, LHD
	02-				**PZ096**	Fte	Ø 19,05	Pla, M/T
	02-				**PZ110**	Fte	Ø 19,05	M/T
220 CDi (209.308) Eng.OM646.966 (110kW)	05-				**PF833**		Ø 20,64/25,40	Alu, +ABS
	05-				**PZ096**	Fte	Ø 19,05	Pla, M/T
	05-				**PZ110**	Fte	Ø 19,05	M/T
240 (209.361) Eng.M112.912 (120-125kW)	6/02-				**PF833**		Ø 20,64/25,40	Alu, +ABS
270 CDi (209.316) Eng.OM612.962/ 967 (125kW)	10/02-				**PF837**	Ate	Ø 20,64/23,81	Alu, +ABS, RHD
	10/02-				**PF832**		Ø 20,64/23,81	Alu, +ABS, LHD
	02-				**PZ096**	Fte	Ø 19,05	Pla, M/T
	02-				**PZ110**	Fte	Ø 19,05	M/T
280 (209.354) Eng.M272.940 (170kW)	05-				**PF833**		Ø 20,64/25,40	Alu, +ABS
320 (209.365) Eng.M112.946 (160kW)	6/02-				**PF833**		Ø 20,64/25,40	Alu, +ABS
320 CDi (209.320) Eng.OM642.910 (165kW)	05-				**PF833**		Ø 20,64/25,40	Alu, +ABS
	05-				**PZ096**	Fte	Ø 19,05	Pla, M/T
	05-				**PZ110**	Fte	Ø 19,05	M/T
350 (209.356) Eng.M272.960 (200kW)	05-				**PF833**		Ø 20,64/25,40	Alu, +ABS
	05-				**PZ096**	Fte	Ø 19,05	Pla, M/T
	05-				**PZ110**	Fte	Ø 19,05	M/T
500 (209.375) Eng.M113.968 (225kW)	6/02-				**PF833**		Ø 20,64/25,40	Alu, +ABS
55 AMG (209.376) Eng.M113.987 (270kW)	9/02-				**PF833**		Ø 20,64/25,40	Alu, +ABS
63 AMG (209.377) Eng.M156.982 (354-373kW)	07-				**PF833**		Ø 20,64/25,40	Alu, +ABS
CLK II Cabrio (A209) 2/03-12/09								
200 CGI (209.443) Eng.M271.942 (125kW)	7/03-				**PF837**	Ate	Ø 20,64/23,81	Alu, +ABS, RHD
	7/03-				**PF832**		Ø 20,64/23,81	Alu, +ABS, LHD
	03-				**PZ096**	Fte	Ø 19,05	Pla, M/T
	03-				**PZ110**	Fte	Ø 19,05	M/T
200 K. Eng.M271.940 (135kW)	07-				**PF837**	Ate	Ø 20,64/23,81	Alu, +ABS, RHD
	07-				**PF832**		Ø 20,64/23,81	Alu, +ABS, LHD
	07-				**PF833**		Ø 20,64/25,40	Alu, +ABS
200 K. (209.442) Eng.M271.940 (120kW)	2/03-				**PF837**	Ate	Ø 20,64/23,81	Alu, +ABS, RHD
	2/03-				**PF832**		Ø 20,64/23,81	Alu, +ABS, LHD
	03-				**PZ096**	Fte	Ø 19,05	Pla, M/T
	03-				**PZ110**	Fte	Ø 19,05	M/T
240 (209.461) Eng.M112.912 (125kW)	2/03-				**PF833**		Ø 20,64/25,40	Alu, +ABS
	03-				**PZ096**	Fte	Ø 19,05	Pla, M/T
	03-				**PZ110**	Fte	Ø 19,05	M/T
280 Eng.M272.940/ .943 (170kW)	05-				**PF833**		Ø 20,64/25,40	Alu, +ABS
320 (209.465) Eng.M112.946 (160kW)	2/03-				**PF833**		Ø 20,64/25,40	Alu, +ABS
320 CDi Eng.OM642.910 (165kW)	07-				**PZ096**	Fte	Ø 19,05	Pla, M/T
	07-				**PZ110**	Fte	Ø 19,05	M/T
350 Eng.M272.960 (200kW)	05-				**PF833**		Ø 20,64/25,40	Alu, +ABS
	05-				**PZ096**	Fte	Ø 19,05	Pla, M/T
	05-				**PZ110**	Fte	Ø 19,05	M/T
500 Eng.M273.967 (285kW)	07-				**PF833**		Ø 20,64/25,40	Alu, +ABS
500 (209.475) Eng.M113.968 (225kW)	2/03-				**PF833**		Ø 20,64/25,40	Alu, +ABS
55 AMG (209.476) Eng.M113.987 (270kW)	2/03-				**PF833**		Ø 20,64/25,40	Alu, +ABS
63 AMG Eng.M156.982 (354kW)	07-				**PF833**		Ø 20,64/25,40	Alu, +ABS
Coupe I (W111) 1/61-12/71								
280 SE (111.024) Eng.M130.980/ 984 (118kW)	67-71				**CZ018**		Ø 23,81	
Coupe II (C123) 3/77-12/85								
230 C (123.043) Eng.M115.954 (80kW)	-3/80				**PF124**	Luc	Ø 19,05	Ch 029952-
	77-80				**CZ018**		Ø 23,81	
	80-				**CZ016**		Ø 23,81	
	77-80				**PZ022**		Ø 19,05	
230 CE (123.243) Eng.M102.980 (100kW)					**PF124**	Luc	Ø 19,05	Ch 029952-
	80-				**CZ016**		Ø 23,81	
	-80				**CZ018**		Ø 23,81	
	80-85				**PZ022**		Ø 19,05	
280 C (123.050) Eng.M110.923 (115kW)					**PF124**	Luc	Ø 19,05	Ch 029952-
	77-80				**CZ018**		Ø 23,81	
	77-80				**PZ022**		Ø 19,05	

		Spare Parts	F/R	L/R	FRITECH ref.		DIMENSIONS mm.	NOTE
280 CE (123.053) Eng.M110.988 (130-136kW)					**PF124**	Luc	Ø 19,05	Ch 029952-
	77-85				**CZ018**		Ø 23,81	
	77-85				**PZ022**		Ø 19,05	
Coupe III (C124) 3/87-3/89								
230 CE (124.043) Eng.M102.982 (97-100kW)	87-89				**PF158**		Ø 23,81	Alu
	87-89				**CZ016**		Ø 23,81	
	89-				**CZ017**		Ø 23,81	
	87-89				**PZ023**		Ø 19,05	Alu
	87-89				**PZ113**		Ø 19,05	
300 CE (124.045/.050) Eng.M103.983 (132-138kW)	87-89				**PF158**		Ø 23,81	Alu
	87-89				**CZ016**		Ø 23,81	
	89-				**CZ017**		Ø 23,81	
	87-89				**PZ023**		Ø 19,05	Alu
	87-89				**PZ113**		Ø 19,05	
Coupe IV (C124) 3/89-5/93								
220 CE (124.042) Eng.M111.960 (110kW)	10/92-5/93				**CZ017**		Ø 23,81	
	92-93				**PZ023**		Ø 19,05	Alu
	92-93				**PZ113**		Ø 19,05	
230 CE (124.043) Eng.M102.982 (97-100kW)	89-92				**PF158**		Ø 23,81	Alu
	-89				**CZ016**		Ø 23,81	
	89-92				**CZ017**		Ø 23,81	
	89-92				**PZ023**		Ø 19,05	Alu
	89-92				**PZ113**		Ø 19,05	
300 CE (124.045/.050) Eng.M103.983 (132-138kW)	89-93				**PF158**		Ø 23,81	Alu
	-89				**CZ016**		Ø 23,81	
	89-93				**CZ017**		Ø 23,81	
	89-93				**PZ023**		Ø 19,05	Alu
	89-93				**PZ113**		Ø 19,05	
300 CE-24 (124.051) Eng.M104.980 (162-170kW)	89-92				**PF158**		Ø 23,81	Alu
	89-92				**CZ017**		Ø 23,81	
	89-92				**PZ023**		Ø 19,05	Alu
	89-92				**PZ113**		Ø 19,05	
320 CE (124.052) Eng.M104.992 (162kW)	10/92-5/93				**CZ017**		Ø 23,81	
	92-93				**PZ023**		Ø 19,05	Alu
	92-93				**PZ113**		Ø 19,05	
SL I (R107) 5/71-8/89								
280 SL (107.042) Eng.M110.982/ 986/ 990					**PF124**	Luc	Ø 19,05	Ch 001212-017463
(130-136kW)	-7/85				**PF155**		Ø 25,40/19,05	Ch 017464-
	-85				**CZ016**		Ø 23,81	Ch 011569-
	74-				**CZ018**		Ø 23,81	Ch -011569
300 SL (107.041) Eng.M103.982 (132-138kW)	9/85-8/89				**PF157**		Ø 25,40/19,05	Alu
	85-89				**CZ016**		Ø 23,81	
350 SL (107.043) Eng.M116.982/ 984 (143kW)	-2/80				**PF124**	Luc	Ø 19,05	Ch 012084-
380 SL (107.045) Eng.M116.960/ 962 (150-160kW)	3/80-				**PF124**	Luc	Ø 19,05	Ch -028725
	-8/85				**PF155**		Ø 25,40/19,05	Ch 028726-
420 SL (107.047) Eng.M116.964 (150-160kW)	86-8/89				**PF157**		Ø 25,40/19,05	Alu
450 SL (107.044) Eng.M117.982/ 985 (160-165kW)	-9/80				**PF124**	Luc	Ø 19,05	Ch 011206-
500 SL (107.046) Eng.M117.960/ 964 (164-170kW)	5/80-				**PF124**	Luc	Ø 19,05	Ch -003462
	-8/85				**PF155**		Ø 25,40/19,05	Ch 003463-
	9/85-8/89				**PF157**		Ø 25,40/19,05	Alu
560 SL (107.048) (240kW)	86-7/89				**PF157**		Ø 25,40/19,05	Alu, Incl. Usa/Japan/Australia
SL I Coupe (C107) 1/72-9/81								
280 SLC (107.022) Eng.M110.982/ 986/ 990					**PF124**	Luc	Ø 19,05	Ch 029952-
(130-136kW)	74-81				**CZ018**		Ø 23,81	
350 SLC (107.023) Eng.M116.982/ 984 (143-147kW)	-3/80				**PF124**	Luc	Ø 19,05	Ch 029952-
380 SLC (107.025) Eng.M116.960 (160kW)					**PF124**	Luc	Ø 19,05	Ch 029952-
450 SLC (107.024) Eng.M117.982/ 985 (160-165kW)	-79				**PF124**	Luc	Ø 19,05	Ch 029952-
450 SLC 5.0 (107.026) Eng.M117.960 (177kW)	-3/80				**PF124**	Luc	Ø 19,05	Ch 029952-
SL II (R129) 3/89-10/01								
280 (129.058) Eng.M104.943 (142kW)	93-01				**PF654**	Trw	Ø 19,05/25,4	Ch F102745-, Alu
	93-				**PF157**		Ø 25,40/19,05	Ch -F102744, Alu

MERCEDES BENZ

		Spare Parts	F/R	L/R	FRITECH ref.		DIMENSIONS mm.	NOTE
280 (129.058) Eng.M104.943 (142kW)	93-01				**CZ017**		Ø 23,81	
	93-01				**PZ023**		Ø 19,05	Alu
	93-01				**PZ113**		Ø 19,05	
280 (129.059) Eng.M112.923/ 925 (150kW)	98-01				**PF654**	Trw	Ø 19,05/25,4	Ch F102745-, Alu
	98-				**PF157**		Ø 25,40/19,05	Ch -F102744, Alu
	98-01				**CZ017**		Ø 23,81	
	98-01				**PZ023**		Ø 19,05	Alu
	98-01				**PZ113**		Ø 19,05	
300 SL (129.060) Eng.M103.984 (140kW)	6/89-7/93				**PF157**		Ø 25,40/19,05	Alu
	89-93				**CZ017**		Ø 23,81	
	89-93				**PZ023**		Ø 19,05	Alu
	89-93				**PZ113**		Ø 19,05	
300 SL-24 (129.061) Eng.M104.981 (170kW)	6/89-7/93				**PF157**		Ø 25,40/19,05	Alu
	89-93				**CZ017**		Ø 23,81	
	89-93				**PZ023**		Ø 19,05	Alu
	89-93				**PZ113**		Ø 19,05	
320 (129.063) Eng.M104.991 (170kW)	93-01				**PF654**	Trw	Ø 19,05/25,4	Ch F102745-, Alu
	93-				**PF157**		Ø 25,40/19,05	Ch -F102744, Alu
	93-01				**CZ017**		Ø 23,81	
320 (129.064) Eng.M112.943 (165kW)	98-01				**PF654**	Trw	Ø 19,05/25,4	Ch F102745-, Alu
500 (129.067) Eng.M119.972 (235kW)	92-01				**PF654**	Trw	Ø 19,05/25,4	Ch F102745-, Alu
	93-				**PF157**		Ø 25,40/19,05	Ch -F102744, Alu
500 (129.068) Eng.M113.961 (225kW)	98-01				**PF654**	Trw	Ø 19,05/25,4	Ch F102745-, Alu
500 SL (129.066) Eng.M119.960/ 972 (240kW)	6/89-92				**PF157**		Ø 25,40/19,05	Alu
60 AMG (129.067) Eng.M120.981 (280kW)	97-				**PF157**		Ø 25,40/19,05	Ch -F102744, Alu
SLK I (R170) 9/96-2/04								
200 (170.435) Eng.M111.946 (100kW)					**PF611**	Trw	Ø 19,05/23,81	Ch -F025730, Alu
					PF633		Ø 19,05/23,81	Ch F025731-, Alu
	96-00				**CZ017**		Ø 23,81	
	96-00				**PZ023**		Ø 19,05	Alu
	96-00				**PZ113**		Ø 19,05	
200 K. (170.444) Eng.M111.958 (120kW)	00-04				**PF834**	Ate	Ø 20,64/25,40	Alu
200 K. (170.445) Eng.M111.943 (141kW)					**PF611**	Trw	Ø 19,05/23,81	Ch -F025730, Alu
					PF633		Ø 19,05/23,81	Ch F025731-, Alu
	96-00				**CZ017**		Ø 23,81	
	96-00				**PZ023**		Ø 19,05	Alu
	96-00				**PZ113**		Ø 19,05	
230 K. (170.447) Eng.M111.973 (142kW)					**PF611**	Trw	Ø 19,05/23,81	Ch -F025730, Alu
					PF633		Ø 19,05/23,81	Ch F025731-, Alu
230 K. (170.449) Eng.M111.983 (145kW)	00-04				**PF834**	Ate	Ø 20,64/25,40	Alu
	00-				**CZ017**		Ø 23,81	
	00-				**PZ023**		Ø 19,05	Alu
	00-				**PZ113**		Ø 19,05	
32 AMG K. (170.466) Eng.M112.960 (260kW)	01-04				**PF833**		Ø 20,64/25,40	Alu, +ABS
320 (170.465) Eng.M112.947 (160kW)	00-04				**PF834**	Ate	Ø 20,64/25,40	Alu
SLK II (R171) 3/04-2/11								
200 K. (171.442) Eng.M271.944 (120kW)	3/04-3/08				**PF833**		Ø 20,64/25,40	Alu, +ABS
	3/04-3/08				**PZ096**	Fte	Ø 19,05	Pla
	3/04-3/08				**PZ110**	Fte	Ø 19,05	
280 Eng.M272.942 (170kW)	05-				**PF833**		Ø 20,64/25,40	Alu, +ABS
	05-				**PZ096**	Fte	Ø 19,05	Pla
	05-				**PZ110**	Fte	Ø 19,05	
350 (171.456) Eng.M272.963 (200kW)	6/04-				**PF833**		Ø 20,64/25,40	Alu, +ABS
	04-				**PZ096**	Fte	Ø 19,05	Pla
	04-				**PZ110**	Fte	Ø 19,05	
55 AMG (171.473) Eng.M113.989 (265kW)	6/04-				**PF833**		Ø 20,64/25,40	Alu, +ABS
T-Model I (W123) 1/76-12/85								
200 (123.020) Eng.M115.938/ 939 (62-69kW)	76-80				**PF124**	Luc	Ø 19,05	
	76-80				**CZ018**		Ø 23,81	
	80-				**CZ016**		Ø 23,81	
	76-80				**PZ022**		Ø 19,05	
200 (123.220) Eng.M102.920/ 939 (74-80kW)	80-85				**PF124**	Luc	Ø 19,05	
	-80				**CZ018**		Ø 23,81	
	80-85				**CZ016**		Ø 23,81	

		Spare Parts	F/R	L/R	FRITECH ref.		DIMENSIONS mm.	NOTE
200 (123.220) Eng.M102.920/ 939 (74-80kW)	80-85				**PZ022**		Ø 19,05	
200 D (123.120) Eng.OM615.940 (40-44kW)	1/76-3/85				**PF124**	Luc	Ø 19,05	
	-85				**CZ016**		Ø 23,81	Ch 238054-
	76-				**CZ018**		Ø 23,81	Ch -238054
	76-85				**PZ022**		Ø 19,05	
220 D (123.126) Eng.OM615.941 (44-49kW)	1/76-1/79				**PF124**	Luc	Ø 19,05	
	76-79				**CZ018**		Ø 23,81	
	76-79				**PZ022**		Ø 19,05	
230 (123.023) Eng.M115.954 (80kW)	1/76-				**PF124**	Luc	Ø 19,05	Ch -173999, Special body
	1/76-81				**PF124**	Luc	Ø 19,05	
	-81				**PF155**		Ø 25,40/19,05	Ch 174000-, Special body
	76-81				**CZ016**		Ø 23,81	
	76-81				**PZ022**		Ø 19,05	
230 E (123.223) Eng.M102.980 (100kW)	80-				**PF124**	Luc	Ø 19,05	Ch -173999, Special body
	80-9/85				**PF124**	Luc	Ø 19,05	
	-12/85				**PF155**		Ø 25,40/19,05	Ch 174000-, Special body
	80-85				**CZ016**		Ø 23,81	
	80-85				**PZ022**		Ø 19,05	
240 D (123.123) Eng.OM616.912 (48-53kW)	1/76-				**PF124**	Luc	Ø 19,05	Ch -414568, Special body
	1/76-12/85				**PF124**	Luc	Ø 19,05	
	-12/85				**PF155**		Ø 25,40/19,05	Ch 414569-, Special body
	-85				**CZ016**		Ø 23,81	Ch 219675-
	76-				**CZ018**		Ø 23,81	Ch -219675
	76-85				**PZ022**		Ø 19,05	
250 (123.026) Eng.M123.921 (95-103kW)	1/76-				**PF124**	Luc	Ø 19,05	Ch -118041, Special body
	1/76-7/85				**PF124**	Luc	Ø 19,05	
	-12/85				**PF155**		Ø 25,40/19,05	Ch 118042-, Special body
	76-85				**CZ018**		Ø 23,81	
	76-85				**PZ022**		Ø 19,05	
280 (123.030) Eng.M110.923 (115kW)	1/76-				**PF124**	Luc	Ø 19,05	Ch -115175, Special body
	1/76-81				**PF124**	Luc	Ø 19,05	
	-81				**PF155**		Ø 25,40/19,05	Ch 115176-, Special body
	76-81				**CZ018**		Ø 23,81	
	76-81				**PZ022**		Ø 19,05	
280 E Eng.M110.984/ 988 (136kW)	1/76-				**PF124**	Luc	Ø 19,05	Ch -115175, Special body
	1/76-12/85				**PF124**	Luc	Ø 19,05	
	-12/85				**PF155**		Ø 25,40/19,05	Ch 115176-, Special body
	76-85				**CZ018**		Ø 23,81	
	76-85				**PZ022**		Ø 19,05	
280 E (123.033) Eng.M110.988 (130-136kW)	1/76-				**PF124**	Luc	Ø 19,05	Ch -115175, Special body
	1/76-12/85				**PF124**	Luc	Ø 19,05	
	-12/85				**PF155**		Ø 25,40/19,05	Ch 115176-, Special body
	76-85				**CZ018**		Ø 23,81	
	76-85				**PZ022**		Ø 19,05	
300 D (123.130/.132/.150) Eng.OM617.912	1/76-				**PF124**	Luc	Ø 19,05	Ch -310479, Special body
(59-65kW)	1/76-12/85				**PF124**	Luc	Ø 19,05	
	-12/85				**PF155**		Ø 25,40/19,05	Ch 310480-, Special body
	76-85				**CZ018**		Ø 23,81	
	76-85				**PZ022**		Ø 19,05	
300 TD (123.133) Eng.OM617.952 (92kW)	81-				**PF124**	Luc	Ø 19,05	Ch -310479, Special body
	81-85				**PF124**	Luc	Ø 19,05	
	-85				**PF155**		Ø 25,40/19,05	Ch 310480-, Special body
	81-85				**CZ018**		Ø 23,81	
	81-85				**PZ022**		Ø 19,05	
T-Model I SW (S123) 9/77-12/85								
200 T (123.280) Eng.M102.920/ 939 (74-80kW)					**PF124**	Luc	Ø 19,05	Ch 029952-
	80-85				**CZ016**		Ø 23,81	
	80-85				**PZ022**		Ø 19,05	
230 (123.083) Eng.M115.954 (80kW)	-3/80				**PF124**	Luc	Ø 19,05	Ch 029952-
	77-80				**CZ016**		Ø 23,81	
	77-80				**PZ022**		Ø 19,05	
230 (123.283) Eng.M102.980 (100kW)					**PF124**	Luc	Ø 19,05	Ch 029952-
	80-85				**CZ016**		Ø 23,81	
	80-85				**PZ022**		Ø 19,05	

MERCEDES BENZ

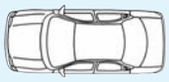	1 2	Spare Parts	F/R	L/R	FRITECH ref.		DIMENSIONS mm.	NOTE
240 D (123.183) Eng.OM616.912 (48-53kW)					**PF124**	Luc	Ø 19,05	Ch 029952-
	-85				**CZ016**		Ø 23,81	Ch 014173-
	77-				**CZ018**		Ø 23,81	Ch -014173
	77-85				**PZ022**		Ø 19,05	
250 (123.086) Eng.M123.921 (95-103kW)					**PF124**	Luc	Ø 19,05	Ch 029952-
	78-82				**CZ018**		Ø 23,81	
	78-82				**PZ022**		Ø 19,05	
280 (123.093) Eng.M110.988 (136kW)					**PF124**	Luc	Ø 19,05	Ch 029952-
	77-85				**CZ018**		Ø 23,81	
	77-85				**PZ022**		Ø 19,05	
300 D (123.190) Eng.OM617.912 (59-65kW)					**PF124**	Luc	Ø 19,05	Ch 029952-
	77-85				**CZ018**		Ø 23,81	
	77-85				**PZ022**		Ø 19,05	
300 TD (123.193) Eng.OM617.952 (92kW)					**PF124**	Luc	Ø 19,05	Ch 029952-
T-Model II (W124) 12/84-6/93								
200 (124.020) Eng.M102.922 (75-77-80kW)	85-90				**PF158**		Ø 23,81	Alu, Exc. 400E, 500E
	85-90				**CZ016**		Ø 23,81	
	85-90				**PZ023**		Ø 19,05	Alu
	85-90				**PZ113**		Ø 19,05	
200 D (124.120) Eng.OM601.912 (53-55kW)	84-93				**PF158**		Ø 23,81	Alu, Exc. 400E, 500E
	84-93				**CZ016**		Ø 23,81	
	84-93				**PZ023**		Ø 19,05	Alu
	84-93				**PZ113**		Ø 19,05	
200 E (124.019) Eng.M111.940 (100kW)	92-93				**PF158**		Ø 23,81	Alu, Exc. 400E, 500E
	92-93				**CZ016**		Ø 23,81	
	92-93				**PZ023**		Ø 19,05	Alu
	92-93				**PZ113**		Ø 19,05	
200 E (124.021) Eng.M102.963 (87-90kW)	88-92				**PF158**		Ø 23,81	Alu, Exc. 400E, 500E
	88-92				**CZ016**		Ø 23,81	
	88-92				**PZ023**		Ø 19,05	Alu
	88-92				**PZ113**		Ø 19,05	
220 E (124.022) Eng.M111.960 (110kW)	92-93				**PF158**		Ø 23,81	Alu, Exc. 400E, 500E
	92-93				**CZ017**		Ø 23,81	
	92-93				**PZ023**		Ø 19,05	Alu
	92-93				**PZ113**		Ø 19,05	
230 E (124.023), Kat Eng.M102.982 (97-100kW)	84-6/93				**PF158**		Ø 23,81	Alu, Exc. 400E, 500E
	-8/89				**CZ016**		Ø 23,81	
	9/89-93				**CZ017**		Ø 23,81	
	84-93				**PZ023**		Ø 19,05	Alu
	84-93				**PZ113**		Ø 19,05	
250 D (124.125) Eng.OM602.912 (66-69kW)	85-93				**PF158**		Ø 23,81	Alu, Exc. 400E, 500E
	85-89				**CZ016**		Ø 23,81	
	89-93				**CZ017**		Ø 23,81	
	85-93				**PZ023**		Ø 19,05	Alu
	85-93				**PZ113**		Ø 19,05	
250 TD (124.128) Eng.OM602.962 (93kW)	88-93				**PF158**		Ø 23,81	Alu, Exc. 400E, 500E
	88-93				**PZ023**		Ø 19,05	Alu
	88-93				**PZ113**		Ø 19,05	
260 E (124.026) Eng.M103.940 (118-122kW)	85-92				**PF158**		Ø 23,81	Alu, Exc. 400E, 500E
	-89				**CZ016**		Ø 23,81	
	89-92				**CZ017**		Ø 23,81	
	85-92				**PZ023**		Ø 19,05	Alu
	85-92				**PZ113**		Ø 19,05	
260 E 4-matic (124.226) Eng.M103.940 (122kW)	86-89				**PF158**		Ø 23,81	Alu, Exc. 400E, 500E
	89-				**CZ017**		Ø 23,81	
	-89				**CZ016**		Ø 23,81	
	86-89				**PZ023**		Ø 19,05	Alu
	86-89				**PZ113**		Ø 19,05	
260 E 4-matic (124.226) Eng.M103.943 (118kW)	86-92				**PF158**		Ø 23,81	Alu, Exc. 400E, 500E
	-89				**CZ016**		Ø 23,81	
	89-92				**CZ017**		Ø 23,81	
	86-92				**PZ023**		Ø 19,05	Alu
	86-92				**PZ113**		Ø 19,05	

		Spare Parts	F/R	L/R	FRITECH ref.		DIMENSIONS mm.	NOTE
280 E (124.028) Eng.M104.942 (145kW)	92-93				**PF158**		Ø 23,81	Alu, Exc. 400E, 500E
	92-93				**CZ017**		Ø 23,81	
	92-93				**PZ023**		Ø 19,05	Alu
	92-93				**PZ113**		Ø 19,05	
300 D (124.130) Eng.OM603.912 (80-81-83kW)	84-93				**PF158**		Ø 23,81	Alu, Exc. 400E, 500E
	84-89				**CZ016**		Ø 23,81	
	89-93				**CZ017**		Ø 23,81	
	84-93				**PZ023**		Ø 19,05	Alu
	84-93				**PZ113**		Ø 19,05	
300 D 4-matic (124.330) Eng.OM603.913	86-6/93				**PF158**		Ø 23,81	Alu, Exc. 400E, 500E
(80-83kW)	86-89				**CZ016**		Ø 23,81	
	89-93				**CZ017**		Ø 23,81	
	86-93				**PZ023**		Ø 19,05	Alu
	86-93				**PZ113**		Ø 19,05	
300 E 4-matic (124.230) Eng.M103.985 (132kW)	86-93				**PF158**		Ø 23,81	Alu, Exc. 400E, 500E
	-89				**CZ016**		Ø 23,81	
	89-93				**CZ017**		Ø 23,81	
	86-93				**PZ023**		Ø 19,05	Alu
	86-93				**PZ113**		Ø 19,05	
300 E, 4-matic (124.030) Eng.M103.980/ 983	85-92				**PF158**		Ø 23,81	Alu, Exc. 400E, 500E
(132-138kW)	-89				**CZ016**		Ø 23,81	
	89-92				**CZ017**		Ø 23,81	
	85-92				**PZ023**		Ø 19,05	Alu
	85-92				**PZ113**		Ø 19,05	
300 E-24 (124.031) Eng.M104.980 (162-170kW)	88-92				**PF158**		Ø 23,81	Alu, Exc. 400E, 500E
	-89				**CZ016**		Ø 23,81	
	89-92				**CZ017**		Ø 23,81	
	88-92				**PZ023**		Ø 19,05	Alu
	88-92				**PZ113**		Ø 19,05	
300 TD, 4-matic (124.333) Eng.OM603.960/ 963 (105-108kW)	86-6/93				**PF158**		Ø 23,81	Alu, Exc. 400E, 500E
320 E (124.032) Eng.M104.992 (162kW)	92-93				**PF158**		Ø 23,81	Alu, Exc. 400E, 500E
	92-93				**CZ017**		Ø 23,81	
	92-93				**PZ023**		Ø 19,05	Alu
	92-93				**PZ113**		Ø 19,05	
400 E 4.2 (124.034) Eng.M119.975 (205kW)	92-93				**PF655**	Trw	Ø 19,05/25,4	Alu
	10/92-6/93				**PF157**		Ø 25,40/19,05	Alu
500 E (124.036) Eng.M119.974 (240kW)	1/91-				**PF157**		Ø 25,40/19,05	Ch -B927760, Alu
T-Model II SW (S124) 9/85-9/89								
200 (124.081) Eng.M102.963 (87kW)	88-89				**PF158**		Ø 23,81	Alu
	88-89				**CZ016**		Ø 23,81	
	88-89				**PZ023**		Ø 19,05	Alu
	88-89				**PZ113**		Ø 19,05	
200 D (124.180) Eng.OM601.912 (53-55kW)	85-89				**PF158**		Ø 23,81	Alu
	85-89				**CZ016**		Ø 23,81	
	85-89				**PZ023**		Ø 19,05	Alu
	85-89				**PZ113**		Ø 19,05	
200 E Eng.M102.962 (90kW)	88-89				**CZ016**		Ø 23,81	
	88-89				**PZ023**		Ø 19,05	Alu
	88-89				**PZ113**		Ø 19,05	
200 T (124.080) Eng.M102.922 (75-77-80kW)	85-89				**PF158**		Ø 23,81	Alu
	85-89				**CZ016**		Ø 23,81	
	85-89				**PZ023**		Ø 19,05	Alu
	85-89				**PZ113**		Ø 19,05	
230, Kat. (124.083) Eng.M102.982 (97-100kW)	85-89				**PF158**		Ø 23,81	Alu
	85-89				**CZ016**		Ø 23,81	
	89-				**CZ017**		Ø 23,81	
	85-89				**PZ023**		Ø 19,05	Alu
	85-89				**PZ113**		Ø 19,05	
250 D (124.185) Eng.OM602.912 (66-69kW)	85-89				**PF158**		Ø 23,81	Alu
	85-89				**CZ016**		Ø 23,81	
	89-				**CZ017**		Ø 23,81	
	85-89				**PZ023**		Ø 19,05	Alu
	85-89				**PZ113**		Ø 19,05	

MERCEDES BENZ

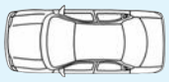		Spare Parts	F/R	L/R	FRITECH ref.		DIMENSIONS mm.	NOTE
260 FGST. Eng.M103.940 (118-122kW)	85-89				**CZ017**		Ø 23,81	
300 (124.090) Eng.M103.983 (132-138kW)	86-89				**PF158**		Ø 23,81	Alu
	86-89				**CZ016**		Ø 23,81	
	89-				**CZ017**		Ø 23,81	
	86-89				**PZ023**		Ø 19,05	Alu
	86-89				**PZ113**		Ø 19,05	
300 4-matic (124.290) Eng.M103.985 (132-138kW)	86-89				**PF158**		Ø 23,81	Alu
	86-89				**CZ016**		Ø 23,81	
	89-				**CZ017**		Ø 23,81	
	86-89				**PZ023**		Ø 19,05	Alu
	86-89				**PZ113**		Ø 19,05	
300 D (124.190) Eng.OM603.912 (80-81-83kW)	86-89				**PF158**		Ø 23,81	Alu
	86-89				**CZ016**		Ø 23,81	
	89-				**CZ017**		Ø 23,81	
	86-89				**PZ023**		Ø 19,05	Alu
	86-89				**PZ113**		Ø 19,05	
T-Model III SW (S124) 9/89-6/93								
200 (124.079) Eng.M111.940 (100kW)	92-93				**PF158**		Ø 23,81	Alu
	92-93				**CZ016**		Ø 23,81	
	92-93				**PZ023**		Ø 19,05	Alu
	92-93				**PZ113**		Ø 19,05	
200 (124.080) Eng.M102.922 (75-77-80kW)	89-90				**PF158**		Ø 23,81	Alu
	89-90				**CZ016**		Ø 23,81	
	89-90				**PZ023**		Ø 19,05	Alu
	89-90				**PZ113**		Ø 19,05	
200 (124.081) Eng.M102.963 (87kW)	89-92				**PF158**		Ø 23,81	Alu
	89-92				**CZ016**		Ø 23,81	
	89-92				**PZ023**		Ø 19,05	Alu
	89-92				**PZ113**		Ø 19,05	
200 D (124.180) Eng.OM601.912 (53-55kW)	89-91				**PF158**		Ø 23,81	Alu
	89-91				**CZ016**		Ø 23,81	
	89-91				**PZ023**		Ø 19,05	Alu
	89-91				**PZ113**		Ø 19,05	
220 (124.082) Eng.M111.960 (110kW)	92-93				**PF158**		Ø 23,81	Alu
	92-93				**CZ017**		Ø 23,81	
	92-93				**PZ023**		Ø 19,05	Alu
	92-93				**PZ113**		Ø 19,05	
230, Kat. (124.083) Eng.M102.982 (97-100kW)	89-92				**PF158**		Ø 23,81	Alu
	-89				**CZ016**		Ø 23,81	
	89-92				**CZ017**		Ø 23,81	
	89-92				**PZ023**		Ø 19,05	Alu
	89-92				**PZ113**		Ø 19,05	
250 D (124.185) Eng.OM602.912 (66-69kW)	89-93				**PF158**		Ø 23,81	Alu
	-89				**CZ016**		Ø 23,81	
	89-93				**CZ017**		Ø 23,81	
	89-93				**PZ023**		Ø 19,05	Alu
	89-93				**PZ113**		Ø 19,05	
250 TD (124.188) Eng.OM602.962 (93kW)					**PF158**		Ø 23,81	Alu
260 FGST. Eng.M103.940 (118-122kW)	89-92				**PF158**		Ø 23,81	Alu
	89-92				**CZ017**		Ø 23,81	
280 (124.088) Eng.M104.942 (145kW)	92-93				**PF158**		Ø 23,81	Alu
	92-93				**CZ017**		Ø 23,81	
	92-93				**PZ023**		Ø 19,05	Alu
	92-93				**PZ113**		Ø 19,05	
300 (124.090) Eng.M103.983 (132-138kW)	89-93				**PF158**		Ø 23,81	Alu
	-89				**CZ016**		Ø 23,81	
	89-93				**CZ017**		Ø 23,81	
	89-93				**PZ023**		Ø 19,05	Alu
	89-93				**PZ113**		Ø 19,05	
300 4-matic (124.290) Eng.M103.985 (132-138kW)	89-93				**PF158**		Ø 23,81	Alu
	-89				**CZ016**		Ø 23,81	
	89-93				**CZ017**		Ø 23,81	
	89-93				**PZ023**		Ø 19,05	Alu
	89-93				**PZ113**		Ø 19,05	

		Spare Parts	F/R	L/R	FRITECH ref.		DIMENSIONS mm.	NOTE
300 D (124.190) Eng.OM603.912 (80-81-83kW)					**PF158**		Ø 23,81	Alu
	-89				**CZ016**		Ø 23,81	
	89-93				**CZ017**		Ø 23,81	
	89-93				**PZ023**		Ø 19,05	Alu
	89-93				**PZ113**		Ø 19,05	
300 TD, 4-matic (124.193) Eng.OM603.960 (100-108kW)					**PF158**		Ø 23,81	Alu
300 TD, 4-matic (124.393) Eng.OM603.963 (105kW)					**PF158**		Ø 23,81	Alu
300-24 (124.091) Eng.M104.980 (162-170kW)	89-92				**PF158**		Ø 23,81	Alu
	-89				**CZ016**		Ø 23,81	
	89-92				**CZ017**		Ø 23,81	
	89-92				**PZ023**		Ø 19,05	Alu
	89-92				**PZ113**		Ø 19,05	
320 (124.092) Eng.M104.992 (162kW)					**PF158**		Ø 23,81	Alu
	92-93				**CZ017**		Ø 23,81	
	92-93				**PZ023**		Ø 19,05	Alu
	92-93				**PZ113**		Ø 19,05	
Vaneo (W414) 2/02-12/05								
1.6 Eng.M166.961 (60kW)	02-				**PZ095**	Fte	Ø 15,87	Pla, M/T
	02-				**PZ109**	Fte	Ø 15,87	M/T
1.6 Eng.M166.961 (75kW)	02-				**PZ095**	Fte	Ø 15,87	Pla, M/T
	02-				**PZ109**	Fte	Ø 15,87	M/T
1.7 CDi Eng.OM668.914 (55kW)	02-				**PZ095**	Fte	Ø 15,87	Pla, M/T
	02-				**PZ109**	Fte	Ø 15,87	M/T
1.7 CDi Eng.OM668.914 (67kW)	02-				**PZ095**	Fte	Ø 15,87	Pla, M/T
	02-				**PZ109**	Fte	Ø 15,87	M/T
1.9 Eng.M166.991 (92kW)	02-				**PZ095**	Fte	Ø 15,87	Pla, M/T
	02-				**PZ109**	Fte	Ø 15,87	M/T
Viano (W639) 9/03-12/13								
2.0 CDi Eng.OM646.980 (85kW)	05-				**PF803**	Bch	Ø 23,81	Alu
2.0 CDI 4-matic Eng.OM646.982 (85kW)	06-				**PF803**	Bch	Ø 23,81	Ch -3558104, Alu
2.0 CDi, 4-matic Eng.OM646.982 (80kW)	03-				**PF803**	Bch	Ø 23,81	Alu
2.2 CDi, 4-matic Eng.OM646.982 (110kW)	03-				**PF803**	Bch	Ø 23,81	Alu
3.0 CDi Eng.OM642.990 (150kW)	06-				**PF803**	Bch	Ø 23,81	Alu
3.2 Eng.M112.951 (140kW)	03-				**PF803**	Bch	Ø 23,81	Alu
3.2 Eng.M112.951 (160kW)	03-				**PF803**	Bch	Ø 23,81	Alu
3.5 Eng.M272.979 (190kW)	07-				**PF803**	Bch	Ø 23,81	Ch -3558105, Alu
3.7 Eng.M112.976 (165-170kW)	04-				**PF803**	Bch	Ø 23,81	Alu

MERCEDES BENZ LCV

Citan (415) 11/12-								
108 CDI Eng.OM607.951 (55kW)	12-		R		**CF854**	Bch	Ø 22,00	Alu
109 CDI Eng.OM607.951 (66kW)	12-		R		**CF854**	Bch	Ø 22,00	Alu
111 CDI Eng.OM607.951 (81kW)	13-		R		**CF854**	Bch	Ø 22,00	Alu
112 Eng.M200.711 (84kW)	13-		R		**CF854**	Bch	Ø 22,00	Alu
MB100 (631) 2/88-12/94								
2.0 D Eng.OM615.970 (44kW)	88-		R		**CF177**		Ø 25,40	
2.0 D Eng.OM615.970 (45kW)	88-		R		**CF177**		Ø 25,40	
2.4 D Eng.OM616.963 (41-53-55kW)	88-		R		**CF177**		Ø 25,40	
Sprinter I 2-T (901, 902) 2/95-5/06								
208 CDi Eng.OM611.987 (60kW)	00-				**PF304**	Bch	Ø 23,81	Ch -A906425
					PF636	Luc	Ø 23,81	Ch R400727-, Alu, -ABS
	00-06				**CZ053**	Fte	Ø 22,20	
	4/00-				**PZ075**	Fte	Ø 19,05	
208 D Eng.OM601.943 (58-60kW)	2/95-				**PF304**	Bch	Ø 23,81	Ch -A906425
	95-00				**CZ053**	Fte	Ø 22,20	
	2/95-4/00				**PZ075**	Fte	Ø 19,05	
210 D Eng.OM602.980 (75kW)	97-				**PF304**	Bch	Ø 23,81	Ch -A906425
	97-00				**CZ053**	Fte	Ø 22,20	
	97-				**PZ029**	Ate	Ø 19,05	
	1/97-4/00				**PZ075**	Fte	Ø 19,05	
211 CDi Eng.OM611.981 (80kW)	00-				**PF304**	Bch	Ø 23,81	Ch -A906425
					PF636	Luc	Ø 23,81	Ch R400727-, Alu, -ABS

MERCEDES BENZ LCV

		Spare Parts	F/R	L/R	FRITECH ref.		DIMENSIONS mm.	NOTE
211 CDi Eng.OM611.981 (80kW)	00-06				**CZ053**	Fte	Ø 22,20	
	4/00-				**PZ075**	Fte	Ø 19,05	
212 D Eng.OM602.980 (90kW)	2/95-				**PF304**	Bch	Ø 23,81	Ch -A906425
	95-06				**CZ053**	Fte	Ø 22,20	
	2/95-4/00				**PZ075**	Fte	Ø 19,05	
213 CDi Eng.OM611.981 (95kW)	00-				**PF304**	Bch	Ø 23,81	Ch -A906425
					PF636	Luc	Ø 23,81	Ch R400727-, Alu, -ABS
	00-06				**CZ053**	Fte	Ø 22,20	
	4/00-				**PZ075**	Fte	Ø 19,05	
214 Eng.M111.979/ 984 (105kW)	2/95-				**PF304**	Bch	Ø 23,81	Ch -A906425
	95-06				**CZ053**	Fte	Ø 22,20	
	2/95-				**PZ075**	Fte	Ø 19,05	
214 NGT Eng.M111.984 (92kW)	4/00-				**PF304**	Bch	Ø 23,81	Ch -A906425
	00-06				**CZ053**	Fte	Ø 22,20	
	4/00-				**PZ075**	Fte	Ø 19,05	
216 CDi Eng.OM612.981 (115kW)	00-				**PF304**	Bch	Ø 23,81	Ch -A906425
					PF636	Luc	Ø 23,81	Ch R400727-, Alu, -ABS
	00-06				**CZ053**	Fte	Ø 22,20	
	4/00-				**PZ075**	Fte	Ø 19,05	
Sprinter I 3-T (903) 2/95-5/06								
308 CDi Eng.OM611.987 (60kW)	00-				**PF304**	Bch	Ø 23,81	Ch -A906425
					PF636	Luc	Ø 23,81	Ch R400727-, Alu, -ABS
	00-06				**CZ053**	Fte	Ø 22,20	
	4/00-				**PZ075**	Fte	Ø 19,05	
308 D 2.3 Eng.OM601.943 (60kW)	2/95-				**PF304**	Bch	Ø 23,81	Ch -A906425
	95-00				**CZ053**	Fte	Ø 22,20	
	2/95-4/00				**PZ075**	Fte	Ø 19,05	
308 D 2.3, 4WD Eng.OM601.943 (58kW)	2/95-				**PF304**	Bch	Ø 23,81	Ch -A906425
	95-00				**CZ053**	Fte	Ø 22,20	
	2/95-4/00				**PZ075**	Fte	Ø 19,05	
308 E (903.372) (40kW)	00-				**PF304**	Bch	Ø 23,81	Ch -A906425
	4/00-				**PZ075**	Fte	Ø 19,05	
310 D 2.9, 4WD Eng.OM602.980 (75kW)	2/95-				**PF304**	Bch	Ø 23,81	Ch -A906425
	95-00				**CZ053**	Fte	Ø 22,20	
	2/95-4/00				**PZ075**	Fte	Ø 19,05	
311 CDi, 4WD Eng.OM611.981 (80kW)	00-4/02				**PF304**	Bch	Ø 23,81	Ch -A906425
	4/02-				**PF636**	Luc	Ø 23,81	Ch R400727-, Alu, -ABS
	00-06				**CZ053**	Fte	Ø 22,20	
	4/00-				**PZ075**	Fte	Ø 19,05	
312 D 2.9, 4WD Eng.OM602.980 (90kW)	95-02				**PF304**	Bch	Ø 23,81	Ch -A906425
	95-02				**CZ053**	Fte	Ø 22,20	
	95-02				**PZ075**	Fte	Ø 19,05	
313 CDi, 4WD Eng.OM611.981 (95kW)	00-4/02				**PF304**	Bch	Ø 23,81	Ch -A906425
	4/02-				**PF636**	Luc	Ø 23,81	Ch R400727-, Alu, -ABS
	00-06				**CZ053**	Fte	Ø 22,20	
	4/00-				**PZ075**	Fte	Ø 19,05	
314 NGT Eng.M111.984 (92kW)	4/00-				**PF304**	Bch	Ø 23,81	Ch -A906425
	00-06				**CZ053**	Fte	Ø 22,20	
	4/00-				**PZ075**	Fte	Ø 19,05	
314, 4WD Eng.M111.979/ 984 (105kW)	95-				**PF304**	Bch	Ø 23,81	Ch -A906425
	95-06				**CZ053**	Fte	Ø 22,20	
	2/95-				**PZ075**	Fte	Ø 19,05	
316 CDi, 4WD Eng.OM612.981 (115kW)	00-				**PF304**	Bch	Ø 23,81	Ch -A906425
					PF636	Luc	Ø 23,81	Ch R400727-, Alu, -ABS
	00-06				**CZ053**	Fte	Ø 22,20	
	4/00-				**PZ075**	Fte	Ø 19,05	
Sprinter I 4-T (904) 2/96-5/06								
408 CDi Eng.OM611.987 (60kW)	00-				**PF580**	Bch	Ø 25,40	Ch -A906425, +ABS
					PF635	Luc	Ø 25,40	Ch R400727-, Alu
	00-06				**CZ053**	Fte	Ø 22,20	
	4/00-				**PZ075**	Fte	Ø 19,05	
408 D, 4WD Eng.OM601.943 (58kW)	-00				**PF580**	Bch	Ø 25,40	Ch P707203-, +ABS
	96-06				**CZ053**	Fte	Ø 22,20	
	2/96-				**PZ075**	Fte	Ø 19,05	

		Spare Parts	F/R	L/R	FRITECH ref.		DIMENSIONS mm.	NOTE
410 D, 4WD Eng.OM602.980 (75kW)	-00				**PF580**	Bch	Ø 25,40	Ch P707203-, +ABS
	97-06				**CZ053**	Fte	Ø 22,20	
	5/97-				**PZ075**	Fte	Ø 19,05	
411 CDi, 4WD Eng.OM611.981 (80kW)	00-				**PF580**	Bch	Ø 25,40	Ch -A906425, +ABS
					PF635	Luc	Ø 25,40	Ch R400727-, Alu
	00-06				**CZ053**	Fte	Ø 22,20	
	4/00-				**PZ075**	Fte	Ø 19,05	
412 D, 4WD Eng.OM602.980 (85kW)	-00				**PF580**	Bch	Ø 25,40	Ch P707203-, +ABS
	96-06				**CZ053**	Fte	Ø 22,20	
	2/96-				**PZ075**	Fte	Ø 19,05	
412 D, 4WD Eng.OM602.980 (90kW)	-00				**PF580**	Bch	Ø 25,40	Ch P707203-, +ABS
	96-06				**CZ053**	Fte	Ø 22,20	
	2/96-				**PZ075**	Fte	Ø 19,05	
413 CDi, 4WD Eng.OM611.981 (95kW)	00-				**PF580**	Bch	Ø 25,40	Ch -A906425, +ABS
					PF635	Luc	Ø 25,40	Ch R400727-, Alu
	00-06				**CZ053**	Fte	Ø 22,20	
	4/00-				**PZ075**	Fte	Ø 19,05	
414, 4WD Eng.M111.979/ 984 (105kW)	-00				**PF580**	Bch	Ø 25,40	Ch P707203-, +ABS
	96-06				**CZ053**	Fte	Ø 22,20	
	2/96-				**PZ075**	Fte	Ø 19,05	
416 CDi, 4WD Eng.OM612.981 (115kW)	00-				**PF580**	Bch	Ø 25,40	Ch -A906425, +ABS
					PF635	Luc	Ø 25,40	Ch R400727-, Alu
	00-06				**CZ053**	Fte	Ø 22,20	
	4/00-				**PZ075**	Fte	Ø 19,05	
Sprinter I 6-T (905) 4/01-5/06								
616 CDi Eng.OM612.981 (115kW)	4/01-				**PZ075**	Fte	Ø 19,05	
Sprinter II 3,5-T (906) 6/06-8/13								
309 CDi Eng.OM646.984 (65kW)	06-				**PF897**	Bch	Ø 25,40	Ch -S419869, Alu, Mod. Z42
	06-5/10				**PF982**	Bch	Ø 26,99	Ch -S419869, Alu
310 CDi Eng.OM651.955 (70kW)	09-5/10				**PF982**	Bch	Ø 26,99	Alu
311 CDi, 4WD Eng.OM646.985 (80kW)	06-				**PF897**	Bch	Ø 25,40	Ch -S419869, Alu, Mod. Z42
	06-5/10				**PF982**	Bch	Ø 26,99	Ch -S419869, Alu
313 CDi Eng.OM651.955 (95kW)	06-				**PF897**	Bch	Ø 25,40	Ch -S419869, Alu, Mod. Z42
	06-5/10				**PF982**	Bch	Ø 26,99	Alu
315 CDi, 4WD Eng.OM646.984 (110kW)	06-				**PF897**	Bch	Ø 25,40	Ch -S419869, Alu, Mod. Z42
	06-5/10				**PF982**	Bch	Ø 26,99	Ch -S419869, Alu
316 Eng.M271.951 (115kW)	08-5/10				**PF982**	Bch	Ø 26,99	Alu
316 CDi, 4WD Eng.OM651.957 (120kW)	09-5/10				**PF982**	Bch	Ø 26,99	Alu
316 NGT/LGT Eng.M271.951 (115kW)	08-5/10				**PF982**	Bch	Ø 26,99	Alu
318 CDi, 4WD Eng.OM646.992 (135kW)	06-				**PF897**	Bch	Ø 25,40	Ch -S419869, Alu, Mod. Z42
	06-5/10				**PF982**	Bch	Ø 26,99	Ch -S419869, Alu
319 CDi, 4WD Eng.OM642.992 (140kW)	09-5/10				**PF982**	Bch	Ø 26,99	Alu
324 Eng.M272.979 (190kW)	06-				**PF897**	Bch	Ø 25,40	Ch -S419869, Alu, Mod. Z42
	06-5/10				**PF982**	Bch	Ø 26,99	Alu
Sprinter II 3-T (906) 6/06-8/13								
209 CDi Eng.OM646.984 (65kW)	06-				**PF897**	Bch	Ø 25,40	Ch -S419869, Alu, Mod. Z42
	06-				**PF982**	Bch	Ø 26,99	Alu
210 CDi Eng.OM651.955 (70kW)	09-5/10				**PF982**	Bch	Ø 26,99	Alu
211 CDi Eng.OM646.984/.985 (80kW)	06-				**PF897**	Bch	Ø 25,40	Ch -S419869, Alu, Mod. Z42
	06-				**PF982**	Bch	Ø 26,99	Alu
213 CDi Eng.OM646.DELA (95kW)	06-				**PF897**	Bch	Ø 25,40	Ch -S419869, Alu, Mod. Z42
	3/09-5/10				**PF982**	Bch	Ø 26,99	Alu
215 CDi Eng.OM646.986 (110kW)	06-				**PF897**	Bch	Ø 25,40	Ch -S419869, Alu, Mod. Z42
	06-				**PF982**	Bch	Ø 26,99	Alu
216 Eng.M271.951 (115kW)	09-5/10				**PF982**	Bch	Ø 26,99	Alu
218 CDi Eng.OM642.992 (135kW)	06-				**PF897**	Bch	Ø 25,40	Ch -S419869, Alu, Mod. Z42
	06-				**PF982**	Bch	Ø 26,99	Alu
219 CDi Eng.OM642.992 (140kW)	09-5/10				**PF982**	Bch	Ø 26,99	Alu
224 Eng.M272.979 (190kW)	06-				**PF897**	Bch	Ø 25,40	Ch -S419869, Alu, Mod. Z42
	06-				**PF982**	Bch	Ø 26,99	Alu
Trasporter (BM309) 1/68-								
L406	1/68-12/75		F/R		**CF199**		Ø 22,20	
	-75				**CZ018**		Ø 23,81	Ch 285632-
	-75				**PZ022**		Ø 19,05	Ch 285632-

MERCEDES BENZ LCV

		Spare Parts	F/R	L/R	FRITECH ref.		DIMENSIONS mm.	NOTE
L407 D	1/75-		F/R		**CF199**		Ø 22,20	
	75-				**CZ018**		Ø 23,81	
	75-				**PZ022**		Ø 19,05	
L408G, DG	1/68-12/75		F/R		**CF199**		Ø 22,20	
	-75				**CZ018**		Ø 23,81	Ch 285632-
	-75				**PZ022**		Ø 19,05	Ch 285632-
L409	1/75-12/82		F/R		**CF199**		Ø 22,20	
	75-82				**CZ018**		Ø 23,81	
	75-82				**PZ022**		Ø 19,05	
L410	1/82-		F/R		**CF199**		Ø 22,20	
	82-				**CZ018**		Ø 23,81	
	82-				**PZ022**		Ø 19,05	
L508 D	1/68-12/75		F/R		**CF199**		Ø 22,20	
	-75				**CZ018**		Ø 23,81	
	-75				**PZ022**		Ø 19,05	
Trasporter (BM310) 1/68-								
507 D	3/86-				**CZ018**		Ø 23,81	
508 D, DK	5/90-				**CZ018**		Ø 23,81	
510	3/86-				**CZ018**		Ø 23,81	
L608 D	1/68-		F/R		**CF199**		Ø 22,20	Exc. VA 730.506/ .600
					PZ022		Ø 19,05	Ch 285632-
LF508 D	1/78-		F/R		**CF199**		Ø 22,20	
	78-				**PZ022**		Ø 19,05	
LF608 D	1/82-		F/R		**CF199**		Ø 22,20	
	82-				**PZ022**		Ø 19,05	
LT608 D	79-				**PZ022**		Ø 19,05	
Trasporter (BM313) 1/77-								
L613 D	77-				**PZ022**		Ø 19,05	
L614 D	77-				**PZ022**		Ø 19,05	
Trasporter (BM601) 5/77-1/95								
207 D Eng.OM616.917/ 934 (48kW)	5/77-		R		**CF166**		Ø 15,87	
					PZ029	Ate	Ø 19,05	Ch 547855- / 232363-499999
					PZ100	Ate	Ø 19,05	Ch 547855- / 232363-499999
207 D Eng.OM616.937/ 939 (53kW)	82-90		R		**CF166**		Ø 15,87	
					PZ029	Ate	Ø 19,05	Ch 547855- / 232363-499999
					PZ100	Ate	Ø 19,05	Ch 547855- / 232363-499999
208 Eng.M115.955/ 972 (63kW)	5/77-		R		**CF166**		Ø 15,87	
					PZ029	Ate	Ø 19,05	Ch 547855- / 232363-499999
					PZ100	Ate	Ø 19,05	Ch 547855- / 232363-499999
208 D Eng.OM601.940 (58-60kW)	9/88-		R		**CF166**		Ø 15,87	
	1/89-95				**PZ029**	Ate	Ø 19,05	
	1/89-95				**PZ100**	Ate	Ø 19,05	
209 D Eng.OM617.913 (65kW)	5/77-		R		**CF166**		Ø 15,87	
	83-12/88				**PZ029**	Ate	Ø 19,05	
	83-12/88				**PZ100**	Ate	Ø 19,05	
210 Eng.M102.945/ 942 (70-77kW)	5/77-		R		**CF166**		Ø 15,87	
	8/82-95				**PZ029**	Ate	Ø 19,05	
	8/82-95				**PZ100**	Ate	Ø 19,05	
210 D Eng.OM602.940 (70-72kW)	88-95		R		**CF166**		Ø 15,87	
	1/89-95				**PZ029**	Ate	Ø 19,05	
	1/89-95				**PZ100**	Ate	Ø 19,05	
Trasporter (BM602) 5/77-1/95								
307 D Eng.OM616.937/ .939/.917 (48-53kW)	5/77-		R		**CF166**		Ø 15,87	
					PZ029	Ate	Ø 19,05	Ch 547855- / 232363-499999
					PZ100	Ate	Ø 19,05	Ch 547855- / 232363-499999
308 (57-62kW)	5/77-		R		**CF166**		Ø 15,87	
					PZ029	Ate	Ø 19,05	Ch 547855- / 232363-499999
					PZ100	Ate	Ø 19,05	Ch 547855- / 232363-499999
308 D Eng.OM601.940 (58-60kW)	9/88-		R		**CF166**		Ø 15,87	
	1/89-95				**PZ029**	Ate	Ø 19,05	
	1/89-95				**PZ100**	Ate	Ø 19,05	
309 D Eng.OM617.913 (65kW)	5/77-		R		**CF166**		Ø 15,87	
	83-12/88				**PZ029**	Ate	Ø 19,05	
	83-12/88				**PZ100**	Ate	Ø 19,05	

		Spare Parts	F/R	L/R	FRITECH ref.		DIMENSIONS mm.	NOTE
310 Eng.M102.942 (69-77kW)	5/77-		R		**CF166**		Ø 15,87	
	8/82-95				**PZ029**	Ate	Ø 19,05	
	8/82-95				**PZ100**	Ate	Ø 19,05	
310 D Eng.OM601.940 (70-72kW)	9/88-		R		**CF166**		Ø 15,87	
	1/89-95				**PZ029**	Ate	Ø 19,05	
	1/89-95				**PZ100**	Ate	Ø 19,05	
Trasporter (BM605) 1/73-4/77								
L206 DG	1/73-4/77		R		**CF489**		Ø 22,20	
L207	1/73-4/77		R		**CF489**		Ø 22,20	
Trasporter (BM606) 1/77-4/77								
L306 DG			R		**CF489**		Ø 22,20	
L307			R		**CF489**		Ø 22,20	
Trasporter (BM607) 1/72-12/73								
L206 D	1/72-12/73		R		**CF489**		Ø 22,20	Incl. 270Q
Trasporter (BM608) 1/72-								
L306 D	1/72-12/73		R		**CF489**		Ø 22,20	Exc. 400 Q
L309 D	77-		F/R		**CF366**		Ø 23,81	
Trasporter (BM611) T1/TN 6/73-1/95								
407 D Eng.OM616.910/ 917 (52-64kW)	6/81-		R		**CF257**		Ø 22,20	
					PZ029	Ate	Ø 19,05	Ch 547855-
					PZ100	Ate	Ø 19,05	Ch 547855-
408 D Eng.OM601.940 (57-59kW)	10/88-		R		**CF257**		Ø 22,20	
	10/89-95				**PZ029**	Ate	Ø 19,05	
	10/89-95				**PZ100**	Ate	Ø 19,05	
409 D Eng.OM617.913 (52-64kW)	6/81-		R		**CF257**		Ø 22,20	
					PZ029	Ate	Ø 19,05	Ch 547855-
					PZ100	Ate	Ø 19,05	Ch 547855-
410 Eng.M102.942/.945 (67-69-77kW)	6/81-		R		**CF257**		Ø 22,20	
					PZ029	Ate	Ø 19,05	Ch 556500-
					PZ100	Ate	Ø 19,05	Ch 556500-
410 D Eng.OM601.940 (70-72kW)	11/88-		R		**CF257**		Ø 22,20	
	89-95				**PZ029**	Ate	Ø 19,05	
	89-95				**PZ100**	Ate	Ø 19,05	
Vario 9/96-12/13								
512 D Eng.OM602.984 (90kW)	96-				**CZ053**	Fte	Ø 22,20	
612 D Eng.OM602.984/ .985 (90kW)	96-				**CZ053**	Fte	Ø 22,20	
810 Eng.OM904.904 (75kW)	96-				**CZ053**	Fte	Ø 22,20	
812 D Eng.OM602.984/ .985 (90kW)	96-				**CZ053**	Fte	Ø 22,20	
Vito I (638) 3/97-8/03								
108 CDi 2.2 Eng.OM611.980 (60kW)	99-				**PF244**		Ø 23,81	+ABS
	99-				**PF245**		Ø 23,81	-ABS
	3/99-				**PZ075**	Fte	Ø 19,05	
108 D 2.3 (638.064) Eng.OM601.942 (58kW)	97-				**PF244**		Ø 23,81	+ABS
	97-				**PF245**		Ø 23,81	-ABS
	3/97-				**CZ112**		Ø 22,20	
	3/97-				**PZ075**	Fte	Ø 19,05	
110 CDi 2.2 Eng.OM611.980 (75kW)	99-				**PF244**		Ø 23,81	+ABS
	99-				**PF245**		Ø 23,81	-ABS
	3/99-				**PZ075**	Fte	Ø 19,05	
110 D 2.3 (638.074) Eng.OM601.970 (72kW)	97-				**PF244**		Ø 23,81	+ABS
	97-				**PF245**		Ø 23,81	-ABS
	3/97-				**CZ112**		Ø 22,20	
	3/97-				**PZ075**	Fte	Ø 19,05	
112 CDi 2.2 Eng.OM611.980 (90kW)	3/99-				**PF244**		Ø 23,81	+ABS
	3/99-				**PF245**		Ø 23,81	-ABS
	3/99-				**PZ075**	Fte	Ø 19,05	
113 2.0 (638.014) Eng.M111.948 (95kW)	97-				**PF244**		Ø 23,81	+ABS
	97-				**PF245**		Ø 23,81	-ABS
	3/97-				**CZ112**		Ø 22,20	
	3/97-				**PZ075**	Fte	Ø 19,05	
114 2.3 (638.034) Eng.M111.978 (105kW)	97-				**PF244**		Ø 23,81	+ABS
	97-				**PF245**		Ø 23,81	-ABS
	3/97-				**CZ112**		Ø 22,20	
	3/97-				**PZ075**	Fte	Ø 19,05	

MERCEDES BENZ LCV

		Spare Parts	F/R	L/R	FRITECH ref.		DIMENSIONS mm.	NOTE
Vito II (639) 9/03-9/14								
109 CDi 2.2 Eng.OM646.983 (65kW)	03-				**PF803**	Bch	Ø 23,81	Alu
109 CDi 2.2, 4WD Eng.OM646.980/ 981 (70kW)	07-				**PF803**	Bch	Ø 23,81	Alu
111 CDi 2.2 Eng.OM646.980/ 982 (85kW)	9/07-				**PF803**	Bch	Ø 23,81	Alu
111 CDi 2.2, 4WD Eng.OM646.982 (80kW)	03-				**PF803**	Bch	Ø 23,81	Alu
115 CDi 2.2, 4WD Eng.OM646.982 (110kW)	03-				**PF803**	Bch	Ø 23,81	Alu
119 Eng.M112.951 (140kW)	03-				**PF803**	Bch	Ø 23,81	Alu
120 CDi Eng.OM642.990 (150kW)	03-				**PF803**	Bch	Ø 23,81	Alu
122 3.2 Eng.M112.951 (160kW)	03-				**PF803**	Bch	Ø 23,81	Alu
123 Eng.M112.976 (165-170kW)	04-				**PF803**	Bch	Ø 23,81	Alu
126 Eng.M272.978 (190kW)	07-				**PF803**	Bch	Ø 23,81	Alu

MERCEDES BENZ TRUCK

200-300 (BM460) 2/79-								
200	5/86-		R		**CF283**		Ø 17,46	Incl. Italy
230 (66-75kW)	2/79-8/85		R		**CF283**		Ø 17,46	
240 (90-92kW)	2/79-		R		**CF283**		Ø 17,46	
250 (53kW)	8/87-		R		**CF283**		Ø 17,46	
280 (110-115kW)	2/79-		R		**CF283**		Ø 17,46	
300 (65-83kW)	2/79-		R		**CF283**		Ø 17,46	
350 TD (100kW)	91-97		R		**CF283**		Ø 17,46	
Bus (BM309/310) 1/69-								
2.2 D (44-63kW)	-12/74		F/R		**CF199**		Ø 22,20	Ch 000181-
2.3 D (66kW)	1/75-		F/R		**CF199**		Ø 22,20	
2.4 D (48kW)	1/75-		F/R		**CF199**		Ø 22,20	
3.8 (62kW)	1/69-		F/R		**CF199**		Ø 22,20	
Unimog 1/73-12/00								
100L Eng.OM602.981/ .989 (85-90kW)	96-				**CZ053**	Fte	Ø 22,20	

MERCURY

Capri								
All models	80-86		R		**CF783**		Ø 19,05	
Comet - Cyclone								
All models	74-75		R	L	**CF436**		Ø 22,20	
	76-77		R	L	**CF609**		Ø 23,81	
	74-75		R	R	**CF437**		Ø 22,20	
	76-77		R	R	**CF610**		Ø 23,81	
Cougar 1/98-12/02								
All models	85-89		R	L	**CF767**		Ø 19,05	
	67-70		R	L	**CF436**		Ø 22,20	
	77-79		R	L	**CF609**		Ø 23,81	
	85-89		R	R	**CF768**		Ø 19,05	
	67-70		R	R	**CF437**		Ø 22,20	
	77-79		R	R	**CF610**		Ø 23,81	
	83-87		R		**CF783**		Ø 19,05	9Inch Brake
	88-97		R		**CF958**		Ø 25,40	9Inch Brake
Linx								
All models	83-84		R	L	**CF722**		Ø 20,20	SW
	81-87		R	L	**CF588**		Ø 20,64	Exc. SW
	83-84		R	R	**CF723**		Ø 20,20	SW
	81-87		R	R	**CF433**		Ø 20,64	Exc. SW
LN7								
All models	82-83		R	L	**CF588**		Ø 20,64	
	82-83		R	R	**CF433**		Ø 20,64	
Merkur Xr4 Ti								
All models	85-89		R		**CF095**		Ø 22,20	
Monarch								
All models	75-80		R	L	**CF609**		Ø 23,81	
	75-80		R	R	**CF610**		Ø 23,81	
Montego								
All models	68-69		R	L	**CF436**		Ø 22,20	Eng. 390
	72-76		R	L	**CF609**		Ø 23,81	Exc. SW
	72-76		R	L	**CF949**		Ø 25,40	Exc. Police
	68-69		R	R	**CF437**		Ø 22,20	Eng. 390

MERCURY

		Spare Parts	F/R	L/R	FRITECH ref.		DIMENSIONS mm.	NOTE
All models	72-76		R	R	**CF610**		Ø 23,81	Exc. SW
	72-76		R	R	**CF950**		Ø 25,40	Exc. Police
Mystique 2/96-12/00								
2.5 V6 (148kW)	2/96-				**PF230**		Ø 25,40	Alu, +ABS
Sable								
All models	86-92		R		**CF751**		Ø 19,05	
	92-00		R		**CF958**		Ø 25,40	
Topaz								
All models	84-94		R	L	**CF722**		Ø 20,20	
	84-94		R	R	**CF723**		Ø 20,20	
Tracer 1/87-12/99								
1.6 (61kW)	87-89		R		**CF218**		Ø 17,46	Exc. SW
	87-89		R		**CF227**		Ø 17,46	SW
Villanger								
All models	93-00		R		**CF958**		Ø 25,40	
XR7								
All models	67-70		R	L	**CF436**		Ø 22,20	
	77-79		R	L	**CF609**		Ø 23,81	
	67-70		R	R	**CF437**		Ø 22,20	
	77-79		R	R	**CF610**		Ø 23,81	
	83-87		R		**CF783**		Ø 19,05	9Inch Brake

MINI

Mini I (R50, R53) 6/01-10/06								
1.4 Eng.W10B14A (55kW)	03-06				**PF524**	Ate	Ø 22,20	Alu, +DSC
	03-06				**PF584**	Ate	Ø 22,20	Alu, -DSC
1.4 One D Eng.1ND/ W17 (55kW)	6/03-				**PF524**	Ate	Ø 22,20	Alu, +DSC
	6/03-				**PF584**	Ate	Ø 22,20	Alu, +ASC, +TC
1.4 One D Eng.1ND/ W17 (65kW)	9/05-				**PF584**	Ate	Ø 22,20	Alu, +ASC, +TC
1.6 Cooper Eng.W10B16A (85kW)	6/01-				**PF524**	Ate	Ø 22,20	Alu, +DSC
1.6 Cooper S Eng.W11B16A (120kW)	3/02-				**PF524**	Ate	Ø 22,20	Alu, +DSC
1.6 Cooper S Eng.W11B16A (125kW)	3/02-				**PF524**	Ate	Ø 22,20	Alu, +DSC
1.6 Cooper Works Eng.W11B16A (155kW)	3/02-				**PF524**	Ate	Ø 22,20	Alu, +DSC
1.6 One Eng.W10B16A (66kW)	6/01-				**PF524**	Ate	Ø 22,20	Alu, +DSC
Mini II Clubman (R55) 11/07-12/13								
1.4 Eng.N12B14A (70kW)	10-				**PF892**	Trw	Ø 23,81	Alu
1.6 Clubman D Eng.N47C16A (66kW)	10-				**PF892**	Trw	Ø 23,81	Alu
1.6 Cooper Eng.N12B16A (88kW)	07-				**PF892**	Trw	Ø 23,81	Alu
1.6 Cooper Eng.N16B16A (90kW)	10-				**PF892**	Trw	Ø 23,81	Alu
1.6 Cooper Eng.W11B16AW (141kW)	08-				**PF892**	Trw	Ø 23,81	Alu
1.6 Cooper Eng.W11B16W (155kW)	08-				**PF892**	Trw	Ø 23,81	Alu
1.6 Cooper Clubman D Eng.N47C16A (82kW)	10-				**PF892**	Trw	Ø 23,81	Alu
1.6 Cooper D Eng.9HZ (80kW)	07-				**PF892**	Trw	Ø 23,81	Alu
1.6 Cooper S Eng.N14B16A (128kW)	07-				**PF892**	Trw	Ø 23,81	Alu
1.6 Cooper S Eng.N18B16A (135kW)	10-				**PF892**	Trw	Ø 23,81	Alu
1.6 One Eng.N16B16A (72kW)	10-				**PF892**	Trw	Ø 23,81	Alu
2.0 D Cooper Eng.N47C20A (80-82kW)	11-				**PF892**	Trw	Ø 23,81	Alu
2.0 SD Cooper Eng.N47C20A (105kW)	11-				**PF892**	Trw	Ø 23,81	Alu
Mini II, Cabrio (R56, R57) 11/06-12/13								
1.4 One Eng.N12B14A (55kW)	09-				**PF892**	Trw	Ø 23,81	Alu
1.4 One Eng.N12B14A (70kW)	07-				**PF892**	Trw	Ø 23,81	Alu
1.6 Cooper Eng.N16B16A (90kW)	10-				**PF892**	Trw	Ø 23,81	Alu
1.6 Cooper D Eng.9HZ (80kW)	07-				**PF892**	Trw	Ø 23,81	Alu
1.6 Cooper D Eng.N47C16A (82kW)	10-				**PF892**	Trw	Ø 23,81	Alu
1.6 Cooper S Eng.N18B16A (135kW)	09-				**PF892**	Trw	Ø 23,81	Alu
1.6 Cooper S, Cabrio Eng.N14B16A (128kW)	06-				**PF892**	Trw	Ø 23,81	Alu
1.6 Cooper, Cabrio Eng.N12B16A (88kW)	06-				**PF892**	Trw	Ø 23,81	Alu
1.6 Cooper, Cabrio Eng.W11B16AW (155kW)	08-				**PF892**	Trw	Ø 23,81	Alu
1.6 D Eng.N47C16A (66kW)	09-				**PF892**	Trw	Ø 23,81	Alu
1.6 One Eng.N16B16A (55kW)	09-				**PF892**	Trw	Ø 23,81	Alu
1.6 One, Cabrio Eng.N16B16A (72kW)	09-				**PF892**	Trw	Ø 23,81	Alu
Mini III Countryman (R60), Paceman (R61) 6/10-								
1.6 Cooper D, All4 Eng.N47C16A (82kW)	10-				**PF892**	Trw	Ø 23,81	Alu

MINI

		Spare Parts	F/R	L/R	FRITECH ref.		DIMENSIONS mm.	NOTE
1.6 Cooper S JCW All4 Eng.N18B16A (160kW)	12-				**PF892**	Trw	Ø 23,81	Alu
1.6 Cooper S, All4 Eng.N18B16A (135kW)	10-				**PF892**	Trw	Ø 23,81	Alu
1.6 Cooper, All4 Eng.N16B16A (90kW)	10-				**PF892**	Trw	Ø 23,81	Alu
1.6 One Eng.N16B16A (72kW)	10-				**PF892**	Trw	Ø 23,81	Alu
1.6 One D Eng.N47C16A (66kW)	10-				**PF892**	Trw	Ø 23,81	Alu
2.0 Cooper D, All4 Eng.N47C20A (82kW)	11-				**PF892**	Trw	Ø 23,81	Alu
2.0 Cooper SD, All4 Eng.N47C20A (105kW)	11-				**PF892**	Trw	Ø 23,81	Alu
Mini III Coupe, Roadster (R58, R59) 8/11-5/15								
1.6 Cooper Eng.N16B16A (90kW)	11-				**PF892**	Trw	Ø 23,81	Alu
1.6 Cooper S Eng.N18B16A (135kW)	11-				**PF892**	Trw	Ø 23,81	Alu
1.6 Cooper S JCW Eng.N14B16C (155kW)	11-				**PF892**	Trw	Ø 23,81	Alu
2.0 SD Cooper Eng.N47C20A (105kW)	11-				**PF892**	Trw	Ø 23,81	Alu

MITSUBISHI

Carisma (DA) 7/95-10/04								
1.6 Eng.4G92 (66kW)	10/98-00		R		**CF515**		Ø 19,05	
	95-9/98		R		**CF826**		Ø 19,05	
	95-				**PF260**	Bch	Ø 22,20	Alu
1.6 Eng.4G92 (70-73kW)	97-9/98		R		**CF826**		Ø 19,05	
	98-00		R		**CF515**		Ø 19,05	
1.6 Eng.4G92 (76kW)	00-		R		**CF826**		Ø 19,05	
1.8 Eng.4G93 (85kW)	95-		R		**CF826**		Ø 19,05	
	7/95-				**PF260**	Bch	Ø 22,20	Alu
1.8 16v Eng.4G93 (103kW)	95-		R		**CF826**		Ø 19,05	
1.8 GDi Eng.4G93(GDI) (90kW)	00-		R		**CF515**		Ø 19,05	
1.8 GDi Eng.4G93(GDI) (92kW)	97-		R		**CF515**		Ø 19,05	
1.9 DI-D Eng.F9Q1 (75kW)	00-		R		**CF826**		Ø 19,05	
1.9 DI-D Eng.F9Q2 (85kW)	00-		R		**CF826**		Ø 19,05	
1.9 TD Eng.F8QT (66kW)	96-00		R		**CF515**		Ø 19,05	
Celeste (A7) 10/75-6/81								
1.6 (A73) Eng.4G32 (55kW)	77-81		R	L	**CF379**	Mit.	Ø 19,05	
	77-81		R	R	**CF378**	Mit.	Ø 19,05	
2.0 GSR (A78) Eng.4G52 (66-71-77kW)	75-81		R	L	**CF379**	Mit.	Ø 19,05	
	75-81		R	R	**CF378**	Mit.	Ø 19,05	
Colt I (A15A)/ Champ 12/69-1/84								
1.2 (A151A) Eng.4G11 (40kW)	78-1/84		R		**CF269**		Ø 19,05	Europe
1.4 (A152A) Eng.4G12 (51kW)	79-84		R		**CF269**		Ø 19,05	Europe
1.4 T. (A152A) Eng.4G12 (77kW)	81-84		R		**CF269**		Ø 19,05	Europe
Colt II (C1A)/ Champ 2/84-4/88								
1.2 (C15A) Eng.4G16 (40-44kW)	2/84-8/88		R		**CF269**		Ø 19,05	Europe
1.3 (C11A) Eng.G13B (49-56kW)	86-88		R		**CF269**		Ø 19,05	Europe, LHD
1.5 (C12A) Eng.4G15 (55kW)	2/84-8/88		R		**CF269**		Ø 19,05	Europe
1.5 (C12A) Eng.G15B (51kW)	85-88		R		**CF269**		Ø 19,05	Europe
1.6 T. ECi (C13A) Eng.4G32T-C (92kW)	2/84-8/88		R		**CF269**		Ø 19,05	Europe
1.8 D (C14A) Eng.4D65 (44kW)	2/84-8/88		R		**CF269**		Ø 19,05	Europe
Colt III (C5A) 4/88-5/92								
1.3 Eng.4G13 (44kW)	88-90		R		**CF269**		Ø 19,05	
1.3 (C51A) Eng.4G13 (51kW)	89-90		R		**CF269**		Ø 19,05	
	90-92		R		**CF572**		Ø 19,05	
	91-5/92				**PF955**		Ø 20,64	Alu, -ABS
1.3 12v (C51A) Eng.4G13 (55kW)	90-92		R		**CF572**		Ø 19,05	
	91-5/92				**PF955**		Ø 20,64	Alu, -ABS
1.5 (C52A) Eng.4G15 (62kW)	88-90		R		**CF269**		Ø 19,05	
	90-92		R		**CF572**		Ø 19,05	
1.5 (C52A) Eng.4G15 (66kW)	88-90		R		**CF269**		Ø 19,05	
	90-92		R		**CF572**		Ø 19,05	
1.8 D GLX (C54A) Eng.4D65 (44kW)	89-90		R		**CF269**		Ø 19,05	
	90-92		R		**CF572**		Ø 19,05	
Colt IV (CAA) 4/92-4/96								
1.3 12v (CA1A) Eng.G13(BJ90-92/ 12V) (55kW)	92-96		R		**CF572**		Ø 19,05	
	92-96				**PF955**		Ø 20,64	Alu, -ABS
	92-96				**CZ125**		Ø 20,64	
1.5 Eng.4G15 (66kW)	94-96		R		**CF572**		Ø 19,05	
	94-96				**PF259**	Nabco	Ø 23,81	Alu, +ABS

		Spare Parts	F/R	L/R	FRITECH ref.		DIMENSIONS mm.	NOTE
1.5 Eng.4G15 (66kW)	94-96				**PF955**		Ø 20,64	Alu, -ABS
	94-96				**CZ125**		Ø 20,64	
1.6 16v (CA4A) Eng.4G92 (66-70-73-84kW)	92-96		R		**CF572**		Ø 19,05	
	92-96				**PF259**	Nabco	Ø 23,81	Alu, +ABS
	92-96				**PF955**		Ø 20,64	Alu, -ABS
	92-96				**CZ125**		Ø 20,64	
1.8 GTi 16v (CA5A) Eng.4G93 (103kW)	92-96		R		**CF563**		Ø 17,46	
	92-96				**PF259**	Nabco	Ø 23,81	Alu, +ABS
	92-96				**CZ125**		Ø 20,64	
Colt V (CJA) 11/95-6/04								
1.3 12v (CJ1A) Eng.4G13 (55kW)	5/96-9/00		R		**CF572**		Ø 19,05	
1.3 16v Eng.4G13(16v) (60-61-63kW)	00-04		R		**CF572**		Ø 19,05	
1.5 16v (CJ2A) Eng.4G15(16v) (69kW)	11/95-6/04		R		**CF572**		Ø 19,05	
1.6 Eng.4G92 (76kW)	9/00-6/04		R		**CF572**		Ø 19,05	
1.6 (CJ4A) Eng.4G92 (66-70-73-83kW)	96-00		R		**CF563**		Ø 17,46	+ABS
	5/96-9/00		R		**CF572**		Ø 19,05	-ABS
	5/96-00				**PF259**	Nabco	Ø 23,81	Alu, +ABS
Colt VI (CZ, Z2, Z3) 6/04-6/12								
1.1 12v Eng.3A91 (55kW)	04-		R		**CF849**	Trw	Ø 19,05	Alu
1.1 Bifuel Eng.3A91 (55kW)	04-		R		**CF849**	Trw	Ø 19,05	Alu
1.3 16v, 4WD Eng.4A90 (68-7kW)	04-		R		**CF849**	Trw	Ø 19,05	Alu
1.3 Bifuel Eng.4A90 (70kW)	04-		R		**CF849**	Trw	Ø 19,05	Alu
1.5 Di-D Eng.OM636.939 (50kW)	04-		R		**CF849**	Trw	Ø 19,05	Alu
1.5 Di-D HP Eng.OM639.939 (70kW)	04-		R		**CF849**	Trw	Ø 19,05	Alu
Colt VII (Z30) 3/09-6/12								
1.1 12v Eng.3A91 (55kW)	09-		R		**CF849**	Trw	Ø 19,05	Alu
1.3 Eng.4A90 (70kW)	09-		R		**CF849**	Trw	Ø 19,05	Alu
1.5 T Eng.4G15T (110kW)	09-		R		**CF849**	Trw	Ø 19,05	Alu
Cordia (A21A) 10/82-12/86								
1.6 (A212A) Eng.4G32 (55kW)	85-86		R		**CF378**	Mit.	Ø 19,05	4WD
	85-86		R		**CF540**		Ø 17,46	
	82-85		R		**CF269**		Ø 19,05	
1.6 T. (A212A) Eng.4G32T (84-85kW)	85-86		R		**CF378**	Mit.	Ø 19,05	4WD
	85-86		R		**CF540**		Ø 17,46	
	82-85		R		**CF269**		Ø 19,05	
1.8 (A215A) Eng.4G37 (66kW)	10/86-		R		**CF378**	Mit.	Ø 19,05	4WD
	10/86-		R		**CF540**		Ø 17,46	
1.8 T. ECi (A213A) Eng.4G62T(ECI) (100kW)	85-86		R		**CF378**	Mit.	Ø 19,05	4WD
	85-86		R		**CF540**		Ø 17,46	
	84-85		R		**CF269**		Ø 19,05	
Eclipse I (D2A) 4/91-11/95								
2.0 16v, 4WD (D22A) Eng.4G63 (110kW)	91-95				**CZ125**		Ø 20,64	
Eclipse II (D3) 12/95-4/99								
2.0 16v Eng.4G63 (107kW)	95-99				**CZ125**		Ø 20,64	
2.0 GT 16v, 4WD Eng.4G63T(DOHC16V) (157kW)	95-99				**CZ125**		Ø 20,64	
Galant I (A12/V) 1/69-12/82								
1.6, SW Eng.4G32 (55kW)	77-80		R	L	**CF379**	Mit.	Ø 19,05	
	77-80		R	R	**CF378**	Mit.	Ø 19,05	
2.0, SW Eng.4G52 (63-72kW)	77-80		R	L	**CF379**	Mit.	Ø 19,05	
	77-80		R	R	**CF378**	Mit.	Ø 19,05	
Galant II (A16/V), SW 9/80-5/84								
1.6 (A161A) Eng.4G32 (55kW)	80-84		R	L	**CF398**		Ø 20,64	
	80-84		R	R	**CF399**		Ø 20,64	
2.0 (A163) Eng.4G63 (75-82-106-110kW)	80-84		R	L	**CF398**		Ø 20,64	
	80-84		R	R	**CF399**		Ø 20,64	
2.3 TD (A167) Eng.4D55T (62kW)	80-84		R	L	**CF398**		Ø 20,64	
	80-84		R	R	**CF399**		Ø 20,64	
Galant III (E1A) 6/84-12/87								
1.6 (E11A) Eng.4G32 (55kW)	84-87		R		**CF540**		Ø 17,46	
1.8 TD (E14A) Eng.4D65T (60kW)	84-87		R		**CF540**		Ø 17,46	
	84-87				**CZ125**		Ø 20,64	
2.0 (E15A) Eng.4G63 (75-82-106-110kW)	84-87				**CZ125**		Ø 20,64	
2.0 (E15A) Eng.G63B (66kW)	86-87				**CZ125**		Ø 20,64	

MITSUBISHI

		Spare Parts	F/R	L/R	FRITECH ref.		DIMENSIONS mm.	NOTE
2.0 T. ECi (E15A) Eng.4G63T (110kW)	84-85				**CZ125**		Ø 20,64	
2.4 (E16A) Eng.G64B (82kW)	85-87				**CZ125**		Ø 20,64	
Galant IV (E3A) 11/87-10/92								
1.6 (E31A) Eng.4G32B (60kW)	88-89		R		**CF540**		Ø 17,46	
1.8 (E32A) Eng.4G37 (63-66kW)	87-89		R		**CF540**		Ø 17,46	
	90-		R		**CF563**		Ø 17,46	
	87-92				**CZ125**		Ø 20,64	
1.8 D (E34A) Eng.4D65 (55kW)	88-89		R		**CF540**		Ø 17,46	
	90-10/92		R		**CF563**		Ø 17,46	
	88-92				**CZ125**		Ø 20,64	
2.0 (E33A) Eng.4G63 (80kW)	89-92				**CZ125**		Ø 20,64	
2.0 4WD (E38A, E39A) Eng.4G63 (80kW)	89-92				**CZ125**		Ø 20,64	
2.0 GTI 16V 4WD KAT Eng.4G63 (110kW)	91-92				**CZ125**		Ø 20,64	
2.0 Gti 16v, 4WD (E33A, E39A) Eng.4G63 (106-107kW)	87-92				**CZ125**		Ø 20,64	
Galant V (E5A, E7A, E8A) 11/92-8/96								
1.8 (E52A) Eng.4G93 (85kW)	94-96				**CZ125**		Ø 20,64	
1.8 GDi (E52A) Eng.4G93(GDI) (93kW)	92-96				**CZ125**		Ø 20,64	
2.0 TD (E57A) Eng.4D68/ T (66kW)	92-96				**CZ125**		Ø 20,64	
2.0 V6-24v (E54A) Eng.6A12 (110kW)	92-96				**CZ125**		Ø 20,64	
2.0, 4WD (E75A,E55A) Eng.4G63 (101kW)	92-96				**CZ125**		Ø 20,64	
2.5 V6 24v 4WD (E88A) Eng.6G73 (125kW)	92-96				**CZ125**		Ø 20,64	
I-Miev (HA) 6/11-								
Electric Eng.Y4F1 (47-49kW)	11-		R		**CF826**		Ø 19,05	
L200 II (KT) 11/86-8/96								
2.5 D, 4WD (K24T/K14T/K64T) Eng.4D56 (51kW)	11/86-		R	L	**CF309**		Ø 22,22	
	11/86-		R	L	**CF541**		Ø 23,81	
	11/86-		R	R	**CF308**		Ø 22,22	
	11/86-		R	R	**CF542**		Ø 23,81	
2.6 4WD (K33T) Eng.G54B (76kW)	89-95		R	L	**CF309**		Ø 22,22	
	89-95		R	R	**CF308**		Ø 22,22	
L200 III 6/96-5/06								
2.0 (K62T) Eng.4G63 (90kW)	96-		R	L	**CF309**		Ø 22,22	
	96-		R	L	**CF541**		Ø 23,81	
	96-		R	R	**CF308**		Ø 22,22	
	96-		R	R	**CF542**		Ø 23,81	
2.4 4WD (K75T) Eng.4G64 (97kW)	2/00-		R	L	**CF541**		Ø 23,81	
	2/00-		R	R	**CF542**		Ø 23,81	
2.5 D (K64T) Eng.4D56 (55kW)	2/00-		R	L	**CF541**		Ø 23,81	
	2/00-		R	R	**CF542**		Ø 23,81	
2.5 TD 4WD Eng.4D56T (98kW)	03-		R	L	**CF541**		Ø 23,81	
	03-		R	R	**CF542**		Ø 23,81	
2.5 TD 4WD (K74T) Eng.4D56 (73-74-85kW)	2/00-		R	L	**CF541**		Ø 23,81	
	2/00-		R	R	**CF542**		Ø 23,81	
L200 IV (KA, KB) 5/06-10/14								
2.5 DI-D Eng.4D56HP (131kW)	10-		R		**CF975**	Nissin	Ø 22,20	Alu, w/Bleeder/Vite di spurgo, +ABS
	10-		R		**CF974**	Nissin	Ø 22,20	Alu, w/o Bleeder/Vite di spurgo, -ABS
2.5 DI-D, RWD Eng.4D56HP (100kW)	06-		R		**CF975**	Nissin	Ø 22,20	Alu, w/Bleeder/Vite di spurgo, +ABS
	06-		R		**CF974**	Nissin	Ø 22,20	Alu, w/o Bleeder/Vite di spurgo, -ABS
Lancer (A7) 1/74-9/79								
1.2 (A71) Eng.4G11 (40kW)	74-79		R	L	**CF379**	Mit.	Ø 19,05	Front Disc Brake
	74-79		R	L	**CF398**		Ø 20,64	Front Drum Brake
	74-79		R	R	**CF378**	Mit.	Ø 19,05	Front Disc Brake
	74-79		R	R	**CF399**		Ø 20,64	Front Drum Brake
1.4 (A72) Eng.4G12 (50kW)	74-79		R	L	**CF379**	Mit.	Ø 19,05	Front Disc Brake
	74-79		R	L	**CF398**		Ø 20,64	Front Drum Brake
	74-79		R	R	**CF378**	Mit.	Ø 19,05	Front Disc Brake
	74-79		R	R	**CF399**		Ø 20,64	Front Drum Brake
Lancer I (A17) / Mirage 9/69-2/83								
1.2 (A171) Eng.4G11 (40kW)	80-81		R	L	**CF398**		Ø 20,64	
	80-81		R	R	**CF399**		Ø 20,64	
1.4 (A172) Eng.4G12 (50-77kW)	79-82		R	L	**CF379**	Mit.	Ø 19,05	
	79-82		R	R	**CF378**	Mit.	Ø 19,05	
	82-83		R		**CF269**		Ø 19,05	

		Spare Parts	F/R	L/R	FRITECH ref.		DIMENSIONS mm.	NOTE
1.6 (A174) Eng.4G32GS (60-62kW)	79-83		R	L	**CF379**	Mit.	Ø 19,05	
	79-83		R	L	**CF398**		Ø 20,64	Rear Drum Brake
	79-83		R	R	**CF378**	Mit.	Ø 19,05	
	79-83		R	R	**CF399**		Ø 20,64	Rear Drum Brake
Lancer II F (A17)/ Mirage 3/83-1/84								
1.2 (A171) Eng.4G11 (40kW)	83-84		R		**CF269**		Ø 19,05	
1.4 (A172) Eng.4G12 (50kW)	83-84		R		**CF269**		Ø 19,05	
1.4 T. Eng.4G12 (77kW)	83-84		R		**CF269**		Ø 19,05	
Lancer III (C1A, C6A)/ Mirage 11/83-6/92								
1.2 (C15AS/C65A) Eng.4G16 (40-44kW)	2/84-8/88		R		**CF269**		Ø 19,05	
1.5 (C12AS) Eng.4G15 (55-62-64-66kW)	83-88		R		**CF496**		Ø 20,64	
1.5 (C12AS) Eng.G15B (51kW)	85-89		R		**CF269**		Ø 19,05	
1.8 D (C14AS) Eng.4D65 (43-44kW)	84-88		R		**CF269**		Ø 19,05	
	88-92		R		**CF496**		Ø 20,64	
Lancer III (C1V, C3V) SW/ Mirage 1/84-6/92								
1.5 (C12V) Eng.4G15 (55kW)	85-87				**CZ125**		Ø 20,64	
1.5 (C12V) Eng.G15B (51kW)	85-89		R		**CF269**		Ø 19,05	
	85-89				**CZ125**		Ø 20,64	
1.5 12v (C12V) Eng.4G15(12v) (66kW)	90-91		R		**CF496**		Ø 20,64	
	90-91				**CZ125**		Ø 20,64	
1.8 4WD (C37V) Eng.4G37 (63-66-69kW)	87-92				**CZ125**		Ø 20,64	
1.8 4WD (C37V) Eng.G37B (61kW)	87-89				**CZ125**		Ø 20,64	
1.8 D (C14V) Eng.4D65 (43-44kW)	2/84-8/88		R		**CF269**		Ø 19,05	
	88-92		R		**CF496**		Ø 20,64	
	85-92				**CZ125**		Ø 20,64	
Lancer IV (C6A, C7A)/ Mirage 4/88-5/94								
1.3 (C61A) Eng.4G13 (44-51kW)	88-90		R		**CF269**		Ø 19,05	
	90-92		R		**CF572**		Ø 19,05	
	88-92				**CZ125**		Ø 20,64	
1.3 12v (C61A) Eng.4G13 (55kW)	92-94		R		**CF572**		Ø 19,05	
	92-94				**CZ125**		Ø 20,64	
1.5 Eng.4G15 (62kW)	88-92		R		**CF269**		Ø 19,05	
	88-92				**CZ125**		Ø 20,64	
1.5 12v (C62A) Eng.4G15(12v) (61-62-66kW)	88-90		R		**CF269**		Ø 19,05	
	90-92		R		**CF572**		Ø 19,05	
	88-92				**CZ125**		Ø 20,64	
1.6 16v (C63) Eng.4G61 (91kW)	88-89				**CZ125**		Ø 20,64	
1.6 16v (C66A, C76A Eng.4G92 (66-70-73-83kW)	92-94		R		**CF572**		Ø 19,05	
	92-94				**CZ125**		Ø 20,64	
1.8 4WD (C77A) Eng.4G37 (71kW)	89-92		R		**CF572**		Ø 19,05	
	89-92				**CZ125**		Ø 20,64	
1.8 D (C64A) Eng.4D65 (44kW)	88-90		R		**CF269**		Ø 19,05	
	90-92		R		**CF572**		Ø 19,05	
	88-92				**CZ125**		Ø 20,64	
1.8 GTi 16v (C68A) Eng.4G67 (100kW)	89-92				**CZ125**		Ø 20,64	
1.8 GTi 16v (C69A) Eng.4G93 (85-90-103kW)	92-93				**CZ125**		Ø 20,64	
2.0 D Eng.4D68 (50kW)	92-93				**CZ125**		Ø 20,64	
Lancer V (CB/DA)/ Mirage SW 6/92-11/95								
1.6 16v, 4WD (CB/CD4W) Eng.4G92	92-95		R		**CF269**		Ø 19,05	4WD
(66-70-73-83kW)	92-95		R		**CF572**		Ø 19,05	Exc. 4WD
	92-95				**PF259**	Nabco	Ø 23,81	Alu, +ABS
	92-95				**CZ125**		Ø 20,64	
2.0 D (CB8W) Eng.4D68 (50kW)	92-95		R		**CF572**		Ø 19,05	
	92-95				**PF259**	Nabco	Ø 23,81	Alu, +ABS
	92-95				**CZ125**		Ø 20,64	
Lancer V (CB/DA)/ Mirage, Coupe 6/92-11/95								
1.3 12v (CB1A) Eng.G13(BJ90-92/ 12V)	92-95		R		**CF572**		Ø 19,05	
(55-56-58kW)	92-95				**PF955**		Ø 20,64	Alu, -ABS
	92-95				**CZ125**		Ø 20,64	
1.6 16v, 4WD (CB/CD4A) Eng.4G92	92-95		R		**CF540**		Ø 17,46	4WD
(66-70-73-83kW)	92-95		R		**CF563**		Ø 17,46	
	92-95				**PF955**		Ø 20,64	Alu, -ABS
	94-95				**CZ125**		Ø 20,64	

MITSUBISHI

		Spare Parts	F/R	L/R	FRITECH ref.		DIMENSIONS mm.	NOTE
1.8 16v (CB5A) Eng.4G93 (85-90-103kW)	92-93				**CZ125**		Ø 20,64	
2.0 D (CB8A) Eng.4D68 (50kW)	5/92-		R		**CF563**		Ø 17,46	+ABS
	92-95				**CZ125**		Ø 20,64	
Lancer VI (CK/PA)/ Mirage coupe 12/95-12/07								
1.3 12v (CK1A) Eng.4G13 (55kW)	95-		R		**CF572**		Ø 19,05	
	95-07				**PF955**		Ø 20,64	Alu, -ABS
	95-03				**CZ125**		Ø 20,64	
1.5 Eng.4G15 (16V) (74kW)	00-03				**CZ125**		Ø 20,64	
1.5 16v (CK2A) Eng.4G15(16v) (69kW)	95-		R		**CF572**		Ø 19,05	
	95-03				**CZ125**		Ø 20,64	
1.6 16v (CK4A) Eng.4G92 (66-70-73-83kW)	95-		R		**CF563**		Ø 17,46	+ABS
	95-		R		**CF572**		Ø 19,05	-ABS
	95-03				**CZ125**		Ø 20,64	
1.8 Eng.4G93 (91kW)	95-03				**CZ125**		Ø 20,64	
2.0 16v (CP9A) Eng.4G63T (206kW)	99-01				**CZ125**		Ø 20,64	
2.0 D Eng.4D68 (50kW)	95-03				**CZ125**		Ø 20,64	
Pajero I (L04G, L14G)/ Montero I/ Shogun I 12/82-12/91								
2.3 TD (L043G, L048G) Eng.4D55T (62kW)	82-86		R	L	**CF299**		Ø 20,64	
	82-86		R	R	**CF298**		Ø 20,64	
2.5 D Eng.4D56 (51kW)	82-87		R	L	**CF299**		Ø 20,64	
	87-91		R	L	**CF309**		Ø 22,22	
	82-87		R	R	**CF298**		Ø 20,64	
	87-91		R	R	**CF308**		Ø 22,22	
2.5 TD (L044G, L049G) Eng.4D56T (62-64-70kW)	86-89		R	L	**CF299**		Ø 20,64	
	89-91		R	L	**CF309**		Ø 22,22	
	86-89		R	R	**CF298**		Ø 20,64	
	89-91		R	R	**CF308**		Ø 22,22	
2.6 (L042G, L047G), 4WD Eng.4G54 (76kW)	1/83-5/87		R	L	**CF299**		Ø 20,64	
	1/83-5/87		R	R	**CF298**		Ø 20,64	
3.0 V6 (L141G, L146G) Eng.6G72	88-90		R	L	**CF309**		Ø 22,22	
(104-110-125-130-151-210kW)	88-90		R	R	**CF308**		Ø 22,22	
Pajero Pinin (H6W, H7W) 10/99-12/06								
1.8 Eng.4G93 (84kW)	01-04		R		**CF989**	Ake	Ø 20,64	
1.8 GDi (H66W) Eng.4G93(GDI) (88kW)	99-01		R		**CF989**	Ake	Ø 20,64	
2.0 GDi (H67W, H77W) Eng.4G94 (95kW)	01-04		R		**CF989**	Ake	Ø 20,64	
Precis 1/83-1/94								
All models	1/89-12/89		R		**CF471**		Ø 19,05	
	83-12/88		R		**CF269**		Ø 19,05	
	90-		R		**CF472**		Ø 20,64	
Sapporo I (A12) 4/78-7/80								
1.6 (A121) Eng.4G32 (55kW)	78-80		R	L	**CF379**	Mit.	Ø 19,05	
	78-80		R	R	**CF378**	Mit.	Ø 19,05	
Sapporo II (A16A) 8/80-9/84								
1.6 (A161A) Eng.4G32 (55kW)	80-84		R	L	**CF398**		Ø 20,64	
	80-84		R	R	**CF399**		Ø 20,64	
2.0 GSR (A164A) Eng.4G63 (75-82-106-110kW)	80-84		R	L	**CF398**		Ø 20,64	
	80-84		R	R	**CF399**		Ø 20,64	
2.3 TD (A167) Eng.4D55T (62kW)	80-84		R	L	**CF398**		Ø 20,64	
	80-84		R	R	**CF399**		Ø 20,64	
Sapporo III (E16A) 6/87-8/90								
2.4 (E16A) Eng.4G64 (82-91-97-110kW)	87-90				**CZ125**		Ø 20,64	
Sigma I 1/78-1/81								
1.6	78-81		R	L	**CF379**	Mit.	Ø 19,05	
	78-81		R	R	**CF378**	Mit.	Ø 19,05	
2.0	78-81		R	L	**CF379**	Mit.	Ø 19,05	
	78-81		R	R	**CF378**	Mit.	Ø 19,05	
Space Gear (PA/B/DV/W) 5/95-12/06								
2.0 16v (PA3V/W, PB3V) Eng.4G63	95-		R	L	**CF309**		Ø 22,22	
(75-82-85-106-110kW)	95-		R	R	**CF308**		Ø 22,22	
2.4, 4WD (PD4V/W) Eng.4G64 (82-91-97-110kW)	95-		R	L	**CF309**		Ø 22,22	
	95-		R	R	**CF308**		Ø 22,22	
2.5 TD (PA5V/W, PB5V) Eng.4D56T (64kW)	95-		R	L	**CF309**		Ø 22,22	
	95-		R	R	**CF308**		Ø 22,22	

		Spare Parts	F/R	L/R	FRITECH ref.		DIMENSIONS mm.	NOTE
2.5 TD, 4WD (PD5V/W) Eng.4D56TD (73kW)	95-		R	L	**CF309**		Ø 22,22	
	95-		R	R	**CF308**		Ø 22,22	
Space Runner I (N1W, N2W) 10/91-8/99								
1.8, 4WD (N21W/N11W) Eng.4G93 (85-90-103kW)	91-99		R		**CF572**		Ø 19,05	
	91-99				**CZ125**		Ø 20,64	
2.0 TD GLX (N18W) Eng.4D68T (60kW)	92-99		R		**CF572**		Ø 19,05	
	92-99				**CZ125**		Ø 20,64	
Space Star I (DG0) 6/98-12/05								
1.3 16v Eng.4G13(16v) (60-61-63kW)	98-00		R		**CF515**		Ø 19,05	-ABS
1.6 16v Eng.4G18 (72kW)	01-		R		**CF515**		Ø 19,05	-ABS
1.8 GDi Eng.4G93(GDI) (82kW)	02-		R		**CF515**		Ø 19,05	-ABS
1.8 GDi Eng.4G93(GDI) (87kW)	98-		R		**CF515**		Ø 19,05	-ABS
1.8 GDi Eng.4G93(GDI) (90-92-93-96kW)	98-00		R		**CF515**		Ø 19,05	-ABS
1.9 DI-D Eng.F9Q1 (75kW)	01-		R		**CF515**		Ø 19,05	-ABS
1.9 DI-D Eng.F9Q2 (85kW)	02-		R		**CF515**		Ø 19,05	-ABS
Space Star II 6/13-								
1.0 Eng.3A90 (52kW)	13-		R		**CF826**		Ø 19,05	
1.2 Eng.3A92 (57-59kW)	13-		R		**CF826**		Ø 19,05	
Space Wagon I (D0V/W) 1/83-4/91								
1.8 (D05W) Eng.4G37 (66kW)	84-88		R		**CF496**		Ø 20,64	
1.8 4WD (D05V) Eng.4G37 (66kW)	84-88		R		**CF496**		Ø 20,64	
1.8 D (D09W) Eng.4D65 (55kW)	86-91		R		**CF496**		Ø 20,64	
	86-91				**CZ125**		Ø 20,64	
2.0 (D04W) Eng.G63B (62kW)	86-88		R		**CF378**	Mit.	Ø 19,05	
	86-88		R		**CF496**		Ø 20,64	
2.0 4WD (D08W) Eng.G63B (62kW)	86-88		R		**CF378**	Mit.	Ø 19,05	
	86-88		R		**CF496**		Ø 20,64	
Space Wagon II (N3W, N4W) 10/91-10/98								
1.8 D (N35W) Eng.4D65 (55kW)	91-98		R		**CF269**		Ø 19,05	Exc. Norway
	91-98		R		**CF496**		Ø 20,64	Norway
	91-98				**CZ125**		Ø 20,64	
1.8, 4WD (N41W, N31W) Eng.4G93 (85-90-103kW)	5/91-98		R		**CF269**		Ø 19,05	Exc. Norway
	91-98		R		**CF496**		Ø 20,64	Norway
2.0 TD GLX (N38W) Eng.4D68T (60kW)	92-98		R		**CF269**		Ø 19,05	Exc. Norway
	92-98		R		**CF496**		Ø 20,64	Norway
2.0, 4WD (N33W, N43W) Eng.4G63	10/92-98		R		**CF269**		Ø 19,05	Exc. Norway
(75-77-82-98-106-110kW)	10/92-98		R		**CF496**		Ø 20,64	Norway
2.4, AWD (N34W) Eng.4G64 (85kW)	91-96		R		**CF269**		Ø 19,05	Exc. Norway
	91-96		R		**CF496**		Ø 20,64	Norway
Space Wagon III (N5W) 10/98-12/03								
2.4 GDi, 4WD Eng.4G64(GDI) (82-91-97-108-110kW)	98-03		R		**CF989**	Ake	Ø 20,64	
Tredia (A21) 9/82-10/87								
1.4 (A211) Eng.4G12 (51kW)	82-85		R		**CF540**		Ø 17,46	
	82-85		R		**CF269**		Ø 19,05	
1.6 (A212) Eng.4G32 (55kW)	84-87		R		**CF540**		Ø 17,46	
	82-84		R		**CF269**		Ø 19,05	
1.6 T. (A212) Eng.4G32T (84-85kW)	4/84-85		R		**CF540**		Ø 17,46	
	82-3/84		R		**CF269**		Ø 19,05	
1.8 (A215) Eng.4G37 (66kW)	84-86		R		**CF378**	Mit.	Ø 19,05	
	84-86		R		**CF540**		Ø 17,46	
2.0 4WD Eng.4G63 (SOHC 8v) (74kW)	4/84-87		R		**CF378**	Mit.	Ø 19,05	
	82-3/84		R		**CF269**		Ø 19,05	
Vista 1/85-1/91								
All models	85-91		R		**CF496**		Ø 20,64	

MITSUBISHI LCV

L300 I (L03P/G, L02P) 5/78-2/87								
1.6 (L032P, L062P) Eng.4G32 (48-51kW)	83-86		R	L	**CF299**		Ø 20,64	
	83-86		R	R	**CF298**		Ø 20,64	
1.8, 4WD (L035G) Eng.4G62 (60kW)	84-87		R	L	**CF299**		Ø 20,64	
	84-87		R	R	**CF298**		Ø 20,64	
2.0 4WD (L037G) Eng.4G63 (65kW)	86-87		R	L	**CF299**		Ø 20,64	
	86-87		R	R	**CF298**		Ø 20,64	

MITSUBISHI LCV

		Spare Parts	F/R	L/R	FRITECH ref.		DIMENSIONS mm.	NOTE
2.3 D (L038P, L068P) Eng.4D55 (50kW)	83-86		R	L	**CF299**		Ø 20,64	
	83-86		R	R	**CF298**		Ø 20,64	
L300 II (P0W, P1W, P2W)/ Delica 11/86-4/94								
1.4 (P01) Eng.4G33 (50kW)	11/86-88		R	L	**CF299**		Ø 20,64	
	11/86-88		R	R	**CF298**		Ø 20,64	
1.6 (P02V, P12V) Eng.4G32 (51kW)	86-88		R	L	**CF299**		Ø 20,64	
	88-		R	L	**CF309**		Ø 22,22	
	86-88		R	R	**CF298**		Ø 20,64	
	88-		R	R	**CF308**		Ø 22,22	
2.0 (P03V/W, P13V) Eng.G63B (64-65-66kW)	86-88		R	L	**CF299**		Ø 20,64	
	7/88-91		R	L	**CF309**		Ø 22,22	
	86-88		R	R	**CF298**		Ø 20,64	
	7/88-91		R	R	**CF308**		Ø 22,22	
2.0 4WD (P23V, P23W) Eng.4G63 (65kW)	86-88		R	L	**CF299**		Ø 20,64	
	7/88-91		R	L	**CF309**		Ø 22,22	
	86-88		R	R	**CF298**		Ø 20,64	
	7/88-91		R	R	**CF308**		Ø 22,22	
2.4 4WD (P04W, P14V, P04V) Eng.4G64 (82kW)	90-		R	L	**CF309**		Ø 22,22	
	90-		R	R	**CF308**		Ø 22,22	
2.4, 4WD (P24W, P24V) Eng.G64B (80-82kW)	11/86-88		R	L	**CF299**		Ø 20,64	
	88-		R	L	**CF309**		Ø 22,22	
	11/86-88		R	R	**CF298**		Ø 20,64	
	88-		R	R	**CF308**		Ø 22,22	
2.5 D (P05V, P05W, P15V) Eng.4D56 (51-55kW)	86-88		R	L	**CF299**		Ø 20,64	
	88-		R	L	**CF309**		Ø 22,22	
	86-88		R	R	**CF298**		Ø 20,64	
	88-		R	R	**CF308**		Ø 22,22	
2.5 TD, 4WD (P25W, P25V) Eng.4D56T (64kW)	86-88		R	L	**CF299**		Ø 20,64	
	88-		R	L	**CF309**		Ø 22,22	
	86-88		R	R	**CF298**		Ø 20,64	
	88-		R	R	**CF308**		Ø 22,22	

NISSAN

100 NX (B13) 3/90-10/94								
1.6 SR Eng.GA16DE (73-75kW)	93-94		R		**CF174**		Ø 15,87	Alu, -ABS
1.6, 16v Eng.GA16DS (66-71-73kW)	90-94		R		**CF174**		Ø 15,87	Alu
200 (S30) 8/76-6/78								
240Z, 260Z, 280Z	8/76-6/78		R		**CF623**		Ø 22,20	Alu
200 SX (S11) 1/77-12/84								
1.8 T. Eng.Z18ET (124kW)	4/77-82		R		**CF197**		Ø 20,64	Alu
	1/84-12/84		R		**CF623**		Ø 22,20	Alu
	83-84		R		**CF205**		Ø 22,22	Alu
2.0 i 16v Eng.Z20 (103kW)	4/77-82		R		**CF197**		Ø 20,64	Alu
	1/84-12/84		R		**CF623**		Ø 22,20	Alu
	83-84		R		**CF205**		Ø 22,22	Alu
Almera I (N15) 9/95-7/00								
1.4 i, 16v Eng.GA14DE (55-64kW)	7/95-00		R		**CF174**		Ø 15,87	Alu
	7/95-1/98				**PF487**		Ø 22,20	Alu, +ABS
1.6 Eng.GA16DE (66-73-75kW)	7/95-00		R		**CF174**		Ø 15,87	Alu
	7/95-1/98				**PF487**		Ø 22,20	Alu, +ABS
2.0 D Eng.CD20 (55kW)	7/95-00		R		**CF174**		Ø 15,87	Alu
	7/95-1/98				**PF487**		Ø 22,20	Alu, +ABS
2.0 GTi Eng.SR20DE (105kW)	96-00		R		**CF174**		Ø 15,87	Alu
Almera II (N16) 7/00-12/06								
1.5 Eng.QG15DE (66kW)	00-		R		**CF814**	Nabco	Ø 17,46	Alu, -ABS
	00-02				**PF835**		Ø 23,81	Alu, +ABS
	00-				**CZ124**	Nabco	Ø 19,05	
1.5 Eng.QG15DE (72kW)	02-		R		**CF814**	Nabco	Ø 17,46	Alu, -ABS
	02-11/06				**PF835**		Ø 23,81	Alu, +ABS, LHD
	02-				**CZ124**	Nabco	Ø 19,05	
1.5 DCi Eng.K9K702/ 710/ 722 (60kW)	03-		R		**CF814**	Nabco	Ø 17,46	Alu, -ABS
	03-11/06				**PF835**		Ø 23,81	Alu, +ABS
1.8 16v Eng.QG18DE (84-85kW)	00-		R		**CF814**	Nabco	Ø 17,46	Alu, -ABS
	03-07				**PF974**		Ø 23,81	Alu, +ABS, +ESP, LHD

		Spare Parts	F/R	L/R	FRITECH ref.		DIMENSIONS mm.	NOTE
1.8 16v Eng.QG18DE (84-85kW)	00-06				**PF835**		Ø 23,81	Alu, +ABS, LHD
	00-				**CZ124**	Nabco	Ø 19,05	
2.2 DCi Eng.YD22DDT (82kW)	03-		R		**CF814**	Nabco	Ø 17,46	Alu, -ABS
	03-07				**PF974**		Ø 23,81	Alu, +ABS, +ESP, LHD
	03-11/06				**PF835**		Ø 23,81	Alu, +ABS, -ESP, LHD
2.2 DCi Eng.YD22DDTi (100kW)	03-		R		**CF814**	Nabco	Ø 17,46	Alu, -ABS
	03-07				**PF974**		Ø 23,81	Alu, +ABS, +ESP, LHD
	03-11/06				**PF835**		Ø 23,81	Alu, +ABS, -ESP, LHD
2.2 Di Eng.YD22DDT (81kW)	00-		R		**CF814**	Nabco	Ø 17,46	Alu, -ABS
	3/01-2/03				**PF835**		Ø 23,81	Alu, +ABS
Almera Tino (V10) 8/00-12/06								
1.8 16v Eng.QG18DE (84kW)	3/03-12/05				**PF974**		Ø 23,81	Alu, +ABS, +ESP
	8/00-				**PF835**		Ø 23,81	Alu, +ABS
	00-				**CZ124**	Nabco	Ø 19,05	
2.0 Eng.SR20DE (100kW)	8/00-1/03				**PF835**		Ø 23,81	Alu, +ABS
2.2 DCi Eng.YD22DDT (81-84-93kW)	03-				**PF835**		Ø 23,81	Alu, +ABS
2.2 DCi Eng.YD22DDTi (100kW)	03-12/05				**PF974**		Ø 23,81	Alu, +ABS, +ESP
	03-				**PF835**		Ø 23,81	Alu, +ABS
2.2 Di Eng.YD22DDTi (84kW)	00-12/05				**PF974**		Ø 23,81	Alu, +ABS, +ESP
	8/00-1/03				**PF835**		Ø 23,81	Alu, +ABS
Avia 1/80-								
1.2 F275	82-		R		**CF813**	Bdx	Ø 25,40	Spain
	80-		R		**CF812**	Luc	Ø 22,20	
2.0	82-		R		**CF813**	Bdx	Ø 25,40	Spain
			R		**CF177**		Ø 25,40	Spain
2.6 Eng.L26 (103kW)			R		**CF177**		Ø 25,40	Spain
Axxess 1/89-1/91								
All models	89-91		R		**CF197**		Ø 20,64	Alu
Bluebird (510) 1/68-12/73								
1.3 Eng.J13 (50kW)	68-73		R		**CF363**		Ø 20,64	Alu, Exc. Sweden
1.4 Eng.L14 (63kW)	68-73		R		**CF363**		Ø 20,64	Alu, Exc. Sweden
1.6 Eng.L16 (75kW)	68-73		R		**CF363**		Ø 20,64	Alu, Exc. Sweden
2.0 Eng.L20B (81kW)	68-73		R		**CF197**		Ø 20,64	Alu
Bluebird (610) 7/74-11/79								
2.0 Eng.L20B (81kW)	74-79		R		**CF363**		Ø 20,64	Alu, Front Disc Brake, Exc. Europe
Bluebird (710) 7/74-1/77								
1.8 Eng.L18 (59kW)	74-77		R		**CF363**		Ø 20,64	Alu
2.0 Eng.L20B (81kW)	74-77		R		**CF363**		Ø 20,64	Alu
Bluebird (810) 1/76-1/83								
2.4 Eng.L24 (96kW)	7/76-7/78		R		**CF197**		Ø 20,64	Alu, Europe, Wagon
	7/76-8/79		R		**CF363**		Ø 20,64	Alu, Exc. Europe, HT, Sedan, Wagon
	7/76-8/79		R		**CF714**		Ø 20,64	Alu, Europe, HT, Sedan
	80-83		R		**CF205**		Ø 22,22	Alu, Exc. Europe, Sedan, Wagon, Van
	8/78-80		R		**CF407**		Ø 23,81	Alu, Europe, Wagon
2.8 D Eng.LD28 (62kW)	7/76-7/78		R		**CF197**		Ø 20,64	Alu, Europe, Wagon
	7/76-8/79		R		**CF363**		Ø 20,64	Alu, Exc. Europe, HT, Sedan, Wagon
	7/76-8/79		R		**CF714**		Ø 20,64	Alu, Europe, HT, Sedan
	80-83		R		**CF205**		Ø 22,22	Alu, Exc. Europe, Sedan, Wagon, Van
	8/78-80		R		**CF407**		Ø 23,81	Alu, Europe, Wagon
3.0	7/76-7/78		R		**CF197**		Ø 20,64	Alu, Europe, Wagon
	7/76-8/79		R		**CF363**		Ø 20,64	Alu, Exc. Europe, HT, Sedan, Wagon
	7/76-8/79		R		**CF714**		Ø 20,64	Alu, Europe, HT, Sedan
	80-83		R		**CF205**		Ø 22,22	Alu, Exc. Europe, Sedan, Wagon, Van
	8/78-80		R		**CF407**		Ø 23,81	Alu, Europe, Wagon
Bluebird (910) 1/80-3/85								
1.6 Eng.L16S (60kW)	80-83		R		**CF406**		Ø 22,22	Alu, Europe
1.8 Coupe Eng.L18T (66kW)	80-83		R		**CF406**		Ø 22,22	Alu, Europe
1.8, SW Eng.L18S (65kW)	80-83		R		**CF406**		Ø 22,22	Alu, Europe, Exc. SW
	80-83		R		**CF407**		Ø 23,81	Alu, Europe, SW
2.0 D, SW Eng.LD20 (44kW)	80-83		R		**CF406**		Ø 22,22	Alu, Europe, Exc. SW
	80-83		R		**CF407**		Ø 23,81	Alu, Europe, SW
Bluebird (T72 , T12) 12/85-6/91								
1.6 Eng.CA16S (61kW)	86-87		R		**CF197**		Ø 20,64	Alu, -LCS
	87-90		R		**CF205**		Ø 22,22	Alu, +LCS

NISSAN

		Spare Parts	F/R	L/R	FRITECH ref.		DIMENSIONS mm.	NOTE
2.0 Eng.CA20S (75kW)	85-87		R		**CF197**		Ø 20,64	Alu, -LCS
2.0 D Eng.LD20 (49kW)	9/89-90		R		**CF403**		Ø 17,46	Alu, +LCS
	9/89-90		R		**CF197**		Ø 20,64	Alu, -LCS
	86-9/89		R		**CF205**		Ø 22,22	Alu
2.0 i, kat Eng.CA20E/ KAT (77kW)	88-90		R		**CF205**		Ø 22,22	Alu, +LCS
Bluebird (U11/ WU11) 11/83-12/90								
1.8 Eng.CA18S (66kW)	83-88		R		**CF197**		Ø 20,64	Alu
2.0 D, SW Eng.LD20 (43kW)	84-90		R		**CF197**		Ø 20,64	Alu
2.0 D, SW Eng.LD20 (49kW)	84-90		R		**CF197**		Ø 20,64	Alu
2.0 i, kat Eng.CA20E/ KAT (77kW)	84-90		R		**CF197**		Ø 20,64	Alu
Cherry I (F10-F11) 1/76-10/78								
1.0 Eng.A10 (32kW)	76-78		R		**CF517**	Uac	Ø 17,46	Alu, Exc. 100AF, 120AF
1.1 Eng.E10 (37-38kW)	76-78		R		**CF517**	Uac	Ø 17,46	Alu, Exc. 100AF, 120AF
Cherry II (V/N10) 8/78-12/83								
1.0 Eng.A10/ S (32kW)	78-81		R		**CF402**		Ø 15,87	Stage 2
1.2, Coupe, SW Eng.A12 (38kW)	78-81		R		**CF402**		Ø 15,87	Stage 2
1.3, Coupe, SW Eng.E13 (44kW)	81-83		R		**CF402**		Ø 15,87	Stage 2
1.4, Coupe, SW Eng.A14S (59kW)	80-81		R		**CF402**		Ø 15,87	Stage 2
1.5 Eng.E15 (51kW)	81-82		R		**CF402**		Ø 15,87	Stage 2
Cherry III (N12) 5/82-12/86								
1.0 Eng.E10 (37kW)	4/82-86		R		**CF204**	Nabco	Ø 17,46	Alu
1.3 Eng.E13 (44kW)	4/82-86		R		**CF204**	Nabco	Ø 17,46	Alu
1.5 Eng.E15S (55kW)	83-86		R		**CF204**	Nabco	Ø 17,46	Alu
1.5 T. Eng.E15ET (77kW)	83-85		R		**CF204**	Nabco	Ø 17,46	Alu
1.6 (54kW)	82-86		R		**CF204**	Nabco	Ø 17,46	Alu
1.7 D Eng.CD17 (40kW)	82-86		R		**CF204**	Nabco	Ø 17,46	Alu
Datsun 120 (C120, 20)								
LD 20 Van Long			R		**CF197**		Ø 20,64	Alu
E20 1/83-								
All models	83-		R		**CF626**		Ø 25,40	South Africa
Ebro 1/76-								
2.0	-86		R		**CF813**	Bdx	Ø 25,40	Spain
2.8	-86		R		**CF813**	Bdx	Ø 25,40	Spain
F350	76-		R		**CF177**		Ø 25,40	Spain
Evalia 9/11-								
1.5 DCi (66kW)	11-		R		**CF995**		Ø 22,20	
1.5 DCi (81kW)	11-		R		**CF995**		Ø 22,20	
1.6i 16v Eng.HR16DE (81kW)	11-		R		**CF995**		Ø 22,20	
L 35 / L 45 1/82-								
All models	82-		R		**CF177**		Ø 25,40	Spain
Laurel (HLC230) 3/72-5/83								
2.0 Eng.L20A (71kW)	3/77-4/77		R		**CF406**		Ø 22,22	Alu, Hardtop
	3/77-4/77		R		**CF205**		Ø 22,22	Alu, Saloon, Sedan, Six
	5/77-83		R		**CF407**		Ø 23,81	Alu, Saloon, Sedan, Six
2.4 Eng.L24 (83kW)	77-83		R		**CF407**		Ø 23,81	Alu, Saloon, Sedan, Six
Laurel (JC31) 1/81-12/85								
2.0 Eng.L20A (71kW)	81-84		R		**CF406**		Ø 22,22	Alu, Hardtop
	81-84		R		**CF205**		Ø 22,22	Alu, Sedan
2.0 D Eng.LD20 (44kW)	81-84		R		**CF205**		Ø 22,22	Alu, Sedan
2.4 Eng.L24 (83-88-96kW)	81-85		R		**CF406**		Ø 22,22	Alu, Hardtop
	81-85		R		**CF205**		Ø 22,22	Alu, Sedan
2.8 D Eng.LD28 (62kW)	81-85		R		**CF406**		Ø 22,22	Alu, Hardtop
	81-85		R		**CF205**		Ø 22,22	Alu, Sedan
Laurel (JC32) 1/85-12/89								
2.0 Eng.L20A (71kW)	85-87		R		**CF205**		Ø 22,22	Alu
2.4 Eng.L24E/ S (94kW)	85-87		R		**CF205**		Ø 22,22	Alu
2.8 D Eng.RD28 (66kW)	85-89		R		**CF205**		Ø 22,22	Alu
Maxima (J30) 10/88-6/94								
3.0 i Eng.VG30E (125-128kW)	88-94		R		**CF505**		Ø 19,05	Alu, Exc. SW
	88-94		R		**CF205**		Ø 22,22	Alu, SW
Micra I (K10) 12/82-7/92								
1.0 Eng.MA10S (37-40-43kW)	82-91		R		**CF174**		Ø 15,87	Alu
1.2 Eng.MA12S (40-44kW)	86-92		R		**CF174**		Ø 15,87	Alu

		Spare Parts	F/R	L/R	FRITECH ref.		DIMENSIONS mm.	NOTE
Micra II (K11) 8/92-2/03								
1.0 i 16v Eng.CG10DE (44kW)	00-03		R		**CF168**		Ø 17,78	
1.0 i 16v Eng.CG10DE/ GE (40kW)	92-00		R		**CF168**		Ø 17,78	
1.3 i 16v Eng.CG13DE/ GE (55kW)	92-00		R		**CF168**		Ø 17,78	
1.4 i 16v Eng.CGA3DE (60kW)	00-03		R		**CF168**		Ø 17,78	
1.5 D Eng.TD15/ TUD5 (42kW)	98-03		R		**CF168**		Ø 17,78	
Micra III (K12) 1/03-11/10								
1.0 16v Eng.CR10DE (48kW)	1/03-		R		**CF780**	Loc	Ø 19,05	Alu
	03-				**PF812**	Ate	Ø 23,81	Alu, +ESP
	1/03-				**PF530**	Ate	Ø 23,81	Alu, -ESP
1.2 16v Eng.CR12 (48kW)	1/03-		R		**CF780**	Loc	Ø 19,05	Alu
	03-				**PF812**	Ate	Ø 23,81	Alu, +ESP
	1/03-				**PF530**	Ate	Ø 23,81	Alu, -ESP
1.2 16v Eng.CR12DE (59kW)	1/03-		R		**CF780**	Loc	Ø 19,05	Alu
	03-				**PF812**	Ate	Ø 23,81	Alu, +ESP
	1/03-				**PF530**	Ate	Ø 23,81	Alu, -ESP
1.3 Eng.CGA3DE (60kW)	04-		R		**CF780**	Loc	Ø 19,05	Alu
1.4 16v Eng.CR14DE (65kW)	1/03-		R		**CF780**	Loc	Ø 19,05	Alu
	03-				**PF812**	Ate	Ø 23,81	Alu, +ESP
	1/03-				**PF530**	Ate	Ø 23,81	Alu, -ESP
1.5 DCi Eng.K9K (48kW)	1/03-		R		**CF780**	Loc	Ø 19,05	Alu
	03-				**PF812**	Ate	Ø 23,81	Alu, +ESP
	1/03-				**PF530**	Ate	Ø 23,81	Alu, -ESP
1.5 DCi Eng.K9K (50kW)	03-				**PF812**	Ate	Ø 23,81	Alu, +ESP
1.5 DCi Eng.K9K (60kW)	1/03-		R		**CF780**	Loc	Ø 19,05	Alu
	03-				**PF812**	Ate	Ø 23,81	Alu, +ESP
	1/03-				**PF530**	Ate	Ø 23,81	Alu, -ESP
1.5 DCi Eng.K9K (63kW)	07-		R		**CF780**	Loc	Ø 19,05	Alu
	07-				**PF812**	Ate	Ø 23,81	Alu, +ESP
	07-				**PF530**	Ate	Ø 23,81	Alu, -ESP
1.6 16v Eng.HR16DE (81kW)	05-		R		**CF780**	Loc	Ø 19,05	Alu
	05-				**PF812**	Ate	Ø 23,81	Alu, +ESP
	05-				**PF530**	Ate	Ø 23,81	Alu, -ESP
Micra III Cabrio 8/05-11/10								
1.4 16v Eng.CR14DE (65kW)	05-		R		**CF780**	Loc	Ø 19,05	Alu
	05-				**PF812**	Ate	Ø 23,81	Alu, +ESP
	05-				**PF530**	Ate	Ø 23,81	Alu, -ESP
1.6 16v Eng.HR16DE (81kW)	05-		R		**CF780**	Loc	Ø 19,05	Alu
	05-				**PF812**	Ate	Ø 23,81	Alu, +ESP
	05-				**PF530**	Ate	Ø 23,81	Alu, -ESP
Micra IV (K13) 12/10-								
1.2 12v Eng.HR12DE (56-59kW)	10-		R		**CF1013**		Ø 19,05	Alu
1.2 12v GPL Eng.HR12DE (59kW)	12-		R		**CF1013**		Ø 19,05	Alu
1.2 Dig-s Eng.HR12DDR (72kW)	11-		R		**CF1013**		Ø 19,05	Alu
Murano II (Z51) 11/08-								
2.5 DCi Eng.YD25DDTI (140kW)	10-				**PF956**		Ø 25,40	Alu
3.5 V6 Eng.VQ35DE (188kW)	08-				**PF956**		Ø 25,40	Alu
Navara III (D40) 7/05-6/14								
2.5 DCi Eng.YD25DDTI (106kW)	05-		R		**CF970**	Tokiko	Ø 22,20	Alu
2.5 DCi 4WD Eng.YD25DDTI (128kW)	05-		R		**CF970**	Tokiko	Ø 22,20	Alu
2.5 DCi 4WD Eng.YD25DDTI (140kW)	10-		R		**CF970**	Tokiko	Ø 22,20	Alu
2.5 DCi, 4WD Eng.YD25DDTI (126kW)	06-		R		**CF970**	Tokiko	Ø 22,20	Alu
3.0 DCi 4WD Eng.V9X (170kW)	10-		R		**CF970**	Tokiko	Ø 22,20	Alu
Note I (E11E) 3/06-7/13								
1.4 16v Eng.CR14DE (65kW)	3/06-		R		**CF780**	Loc	Ø 19,05	Alu
	3/06-				**PF812**	Ate	Ø 23,81	Alu, +ESP
	3/06-				**PF530**	Ate	Ø 23,81	Alu, -ESP
1.5 DCi Eng.K9K276 (63kW)	3/06-		R		**CF780**	Loc	Ø 19,05	Alu
	06-				**PF812**	Ate	Ø 23,81	Alu, +ESP
	06-				**PF530**	Ate	Ø 23,81	Alu, -ESP
1.5 DCi Eng.K9K278 (76kW)	08-		R		**CF780**	Loc	Ø 19,05	Alu
	08-				**PF812**	Ate	Ø 23,81	Alu, +ESP
	08-				**PF530**	Ate	Ø 23,81	Alu, -ESP

NISSAN

		Spare Parts	F/R	L/R	FRITECH ref.		DIMENSIONS mm.	NOTE
1.5 DCi Eng.K9K752 (50kW)	3/06-		R		**CF780**	Loc	Ø 19,05	Alu
	06-				**PF812**	Ate	Ø 23,81	Alu, +ESP
	06-				**PF530**	Ate	Ø 23,81	Alu, -ESP
1.6 16v Eng.HR16DE (81kW)	3/06-		R		**CF780**	Loc	Ø 19,05	Alu
	3/06-				**PF812**	Ate	Ø 23,81	Alu, +ESP
	3/06-				**PF530**	Ate	Ø 23,81	Alu, -ESP
Note II (E12) 8/13-								
1.2 12v Eng.HR12DE (59kW)	13-		R		**CF1013**		Ø 19,05	Alu
1.2 DIG Eng.HR12DDR (72kW)	13-		R		**CF1013**		Ø 19,05	Alu
1.2 GPL (59kW)	14-		R		**CF1013**		Ø 19,05	Alu
1.5 DCi Eng.K9K (66kW)	13-		R		**CF1013**		Ø 19,05	Alu
Pathfinder I (WD21) 9/82-2/98								
2.4 i 4WD Eng.Z24i (76-79kW)	86-88		R		**CF514**		Ø 17,46	Alu
	1/90-12/90		R		**CF503**		Ø 20,64	Alu
2.5 D 4WD Eng.SD25 (53-55kW)	86-88		R		**CF514**		Ø 17,46	Alu
	1/90-12/90		R		**CF503**		Ø 20,64	Alu
2.7 TD 4WD Eng.TD27 (58-73kW)	87-88		R		**CF514**		Ø 17,46	Alu
	1/90-12/90		R		**CF503**		Ø 20,64	Alu
Pathfinder II (R50) 9/97-2/05								
3.3 V6 4WD Eng.VG33E (110kW)	98-00		R		**CF965**	Nabco	Ø 22,20	Alu
3.3 V6 4WD Eng.VG33E (125kW)	97-10/01		R		**CF965**	Nabco	Ø 22,20	Alu
Pathfinder III (R51) 3/05-8/12								
2.5 DCi Eng.YD25DDTI (126kW)	08-		R		**CF970**	Tokiko	Ø 22,20	Alu
2.5 DCi 4WD Eng.YD25DDTI (128kW)	05-		R		**CF970**	Tokiko	Ø 22,20	Alu
Patrol I (W/K160) SW / Safari 11/79-11/95								
2.8 Eng.L28 (88-89kW)	80-88		R		**CF546**		Ø 22,20	
2.8 TD Eng.RD28T (85kW)	86-95		R		**CF546**		Ø 22,20	
3.3 D Eng.SD33 (70kW)	79-88		R		**CF546**		Ø 22,20	
3.3 TD Eng.SD33T (81kW)	83-88		R		**CF546**		Ø 22,20	
3.9 (85kW)	83-85		R		**CF546**		Ø 22,20	
Patrol I (Y60) Gr / Safari 9/82-6/97								
2.8 TD Eng.RD28T (85kW)	88-97		R		**CF757**		Ø 25,40	
4.2 D Eng.TD42 (85kW)	88-97		R		**CF757**		Ø 25,40	
4.2 Kat Eng.TB42E (121kW)	88-97		R		**CF757**		Ø 25,40	
Pixo 6/09-12/13								
1.0 Eng.K10B (50kW)	09-		R		**CF292**		Ø 19,05	Alu
Prairie (M10, NM10) 7/83-9/88								
1.5 S Eng.E15S (55kW)	84-87		R		**CF403**		Ø 17,46	Alu
1.8 Eng.CA18S (66kW)	83-87		R		**CF403**		Ø 17,46	Alu
2.0 2WD Eng.CA20S (68-71-77-85kW)	86-8/87		R		**CF505**		Ø 19,05	Alu
	9/87-88		R		**CF205**		Ø 22,22	Alu
2.0 4WD Eng.CA20S (68-71-77-85kW)	86-8/87		R		**CF505**		Ø 19,05	Alu
	9/87-88		R		**CF205**		Ø 22,22	Alu
Prairie Pro (M11) 10/88-7/94								
2.0 i Eng.CA20EKat. (71-72-77-85kW)	88-92		R		**CF197**		Ø 20,64	Alu
	88-92		R		**CF205**		Ø 22,22	Alu
2.0 i 4WD Eng.CA20EKat. (71-72-77-85kW)	88-92		R		**CF197**		Ø 20,64	Alu
	88-92		R		**CF205**		Ø 22,22	Alu
2.4 i, 4WD Eng.KA24E (85-88-91-98kW)	92-94		R		**CF517**	Uac	Ø 17,46	Alu
	92-94		R		**CF505**		Ø 19,05	Alu
Primera I (P10) 6/90-6/96								
1.6 Eng.GA16DE/ DS (66-71-73-75kW)	90-96		R	L	**CF242**		Ø 20,64	CRCI, -ABS
	90-96		R	R	**CF243**		Ø 20,64	CRCI, -ABS
	90-96				**PF189**	Bdx	Ø 22,20	
	90-96				**PF216**	Luc	Ø 25,40	Alu, +ABS
2.0 16v, 4WD Eng.SR20DI(SPI) (85-96-103kW)	90-96				**PF216**	Luc	Ø 25,40	Alu, +ABS
2.0 D Eng.CD20 (55kW)	91-96		R	L	**CF242**		Ø 20,64	CRCI, -ABS
	91-96		R	R	**CF243**		Ø 20,64	CRCI, -ABS
	91-96				**PF189**	Bdx	Ø 22,20	
2.0 GT Eng.SR20DEEGIKat. (110kW)	90-96				**PF216**	Luc	Ø 25,40	Alu, +ABS
2.0 i Eng.SR20DE (92kW)	95-96				**PF216**	Luc	Ø 25,40	Alu, +ABS
Primera I (W10) SW/ Avenir 7/90-3/98								
1.6 Eng.GA16DE/ DS (66-71-73-75kW)	90-98		R		**CF197**	Nabco	Ø 20,64	Alu

		Spare Parts	F/R	L/R	FRITECH ref.		DIMENSIONS mm.	NOTE
2.0 D Eng.CD20 (55kW)	90-95		R		**CF197**	Nabco	Ø 20,64	Alu
Primera II (P11) 9/96-2/02								
1.6 16v Eng.GA16DE (66-73kW)	9/96-02		R		**CF629**		Ø 20,64	
2.0 TD Eng.CD20T (66kW)	9/96-99		R		**CF629**		Ø 20,64	
Primera II (WP11) SW 4/98-2/02								
1.6 16v Eng.GA16DE (66-73kW)	98-02		R		**CF629**		Ø 20,64	
1.8 16v Eng.QG18DE (84kW)	99-02				**CZ124**	Nabco	Ø 19,05	
2.0 16v Eng.SR20DE (103kW)	99-02				**CZ124**	Nabco	Ø 19,05	
2.0 TD Eng.CD20T (66kW)	98-02		R		**CF629**		Ø 20,64	
Primera III (W/ P12), SW 3/02-12/08								
1.6 Eng.QG16DE (78kW)	4/02-				**PF579**	Bch	Ø 22,20	Alu, -VDC
1.6 Eng.QG16DE (80kW)	4/02-				**PF579**	Bch	Ø 22,20	Alu, -VDC
	02-				**CZ124**	Nabco	Ø 19,05	
1.8 16v Eng.QG18DE (84kW)	4/02-				**PF578**	Bch	Ø 22,20	Alu, +VDC, M/T+A/T
	4/02-				**PF579**	Bch	Ø 22,20	Alu, -VDC
	02-				**CZ124**	Nabco	Ø 19,05	
1.9 DCi Eng.F9Q (88kW)	03-				**PF578**	Bch	Ø 22,20	Alu, +VDC, M/T+A/T
	03-				**PF579**	Bch	Ø 22,20	Alu, -VDC
2.0 16v Eng.QR20DE (103kW)	4/02-				**PF578**	Bch	Ø 22,20	Alu, +VDC, M/T+A/T
	4/02-				**PF579**	Bch	Ø 22,20	Alu, -VDC
2.2 DCi Eng.YD22 (102kW)	03-				**PF578**	Bch	Ø 22,20	Alu, +VDC, M/T+A/T
	03-				**PF579**	Bch	Ø 22,20	Alu, -VDC
2.2 Di Eng.YD22DDT (81-84-93kW)	4/02-				**PF578**	Bch	Ø 22,20	Alu, +VDC, M/T+A/T
	4/02-				**PF579**	Bch	Ø 22,20	Alu, -VDC
Pulsar I/ Langley 8/78-12/83								
1.2, Coupe, SW Eng.A12 (38kW)	78-81		R		**CF204**	Nabco	Ø 17,46	Alu
1.3, Coupe, SW Eng.E13 (44kW)	4/82-83		R		**CF204**	Nabco	Ø 17,46	Alu
1.4, Coupe, SW Eng.A14S (59kW)	80-81		R		**CF204**	Nabco	Ø 17,46	Alu
1.5 Eng.E15 (51-62kW)	4/82-12/82		R		**CF204**	Nabco	Ø 17,46	Alu
Pulsar III/ Langley 6/86-10/91								
1.6 GTI 16v, Coupe Eng.CA16D (81kW)	87-88		R		**CF620**		Ø 15,87	Alu
1.6 i 12v, SW, Coupe, 4WD Eng.GA16i (66kW)	90-91		R		**CF620**		Ø 15,87	Alu
1.8 GTI 16v, Coupe Eng.CA18D (92kW)	89-91		R		**CF620**		Ø 15,87	Alu
Qashqai I (J10) 2/07-1/14								
1.5 DCi Eng.K9K (81kW)	10-				**PF895**	Bch	Ø 23,81	Alu, +ESP
	10-				**PF924**	Bch	Ø 23,81	Alu, -ESP
1.5 DCi Eng.K9K764 (78kW)	07-				**PF895**	Bch	Ø 23,81	Alu, +ESP, LHD
	07-				**PF924**	Bch	Ø 23,81	Alu, -ESP
1.5 DCi Eng.K9K772 (76kW)	4/08-				**PF895**	Bch	Ø 23,81	Alu, +ESP, LHD
	08-				**PF924**	Bch	Ø 23,81	Alu, -ESP
1.6 Eng.HR16DE (86kW)	10-				**PF895**	Bch	Ø 23,81	Alu, +ESP
	10-				**PF924**	Bch	Ø 23,81	Alu, -ESP
1.6 16v Eng.HR16DE (84kW)	07-				**PF895**	Bch	Ø 23,81	Alu, +ESP, LHD
	07-				**PF924**	Bch	Ø 23,81	Alu, -ESP
1.6 DCi, Allrad Eng.R9M (96kW)	11-				**PF895**	Bch	Ø 23,81	Alu, +ESP
	11-				**PF924**	Bch	Ø 23,81	Alu, -ESP
2.0 16v, Allrad Eng.MR20DE (102-104kW)	07-				**PF895**	Bch	Ø 23,81	Alu, +ESP, LHD
	07-				**PF924**	Bch	Ø 23,81	Alu, -ESP
2.0 DCi, Allrad Eng.M9R7 (110kW)	07-				**PF895**	Bch	Ø 23,81	Alu, +ESP, LHD
	07-				**PF924**	Bch	Ø 23,81	Alu, -ESP
Sentra II (B11), SW 3/82-9/87								
1.3, Coupe Eng.E13 (44kW)	81-83		R		**CF204**	Nabco	Ø 17,46	Alu
	84-87		R		**CF403**		Ø 17,46	Alu
1.5, Coupe Eng.E15S (55kW)	81-83		R		**CF204**	Nabco	Ø 17,46	Alu
	84-87		R		**CF403**		Ø 17,46	Alu
1.7 D Eng.CD17 (40kW)	81-83		R		**CF204**	Nabco	Ø 17,46	Alu
	84-87		R		**CF403**		Ø 17,46	Alu
Sentra III (N13, B12) 6/86-10/91								
1.3 Eng.E13S (44kW)	86-91		R	L	**CF632**		Ø 19,05	South Africa
	86-91		R	R	**CF633**		Ø 19,05	South Africa
	86-91		R		**CF620**		Ø 15,87	Alu, Sedan, Wagon, Exc. 4x4
1.4 Eng.GA14S (55kW)	88-92		R	L	**CF632**		Ø 19,05	South Africa
	88-92		R	R	**CF633**		Ø 19,05	South Africa
	86-90		R		**CF620**		Ø 15,87	Alu, Sedan, Wagon, Exc. 4x4

NISSAN

		Spare Parts	F/R	L/R	FRITECH ref.		DIMENSIONS mm.	NOTE
1.5, SW, Coupe Eng.E15S (52kW)	86-88		R	L	**CF632**		Ø 19,05	South Africa
	86-88		R	R	**CF633**		Ø 19,05	South Africa
	86-88		R		**CF620**		Ø 15,87	Alu, Sedan, Wagon, Exc. 4x4
1.6 i 12v, SW, Coupe, 4WD Eng.GA16i (66kW)	88-92		R	L	**CF632**		Ø 19,05	South Africa
	88-92		R	R	**CF633**		Ø 19,05	South Africa
	86-90		R		**CF517**	Uac	Ø 17,46	Alu, 4WD
	86-90		R		**CF620**		Ø 15,87	Alu, Sedan, Wagon, Exc. 4x4
1.6, 4WD, Coupe, SW Eng.E16i (54kW)	88-92		R	L	**CF632**		Ø 19,05	South Africa
	88-92		R	R	**CF633**		Ø 19,05	South Africa
	86-90		R		**CF517**	Uac	Ø 17,46	Alu, 4WD
	86-90		R		**CF620**		Ø 15,87	Alu, Sedan, Wagon, Exc. 4x4
1.6, SW, Coupe Eng.E16S (62kW)	86-88		R	L	**CF632**		Ø 19,05	South Africa
	86-88		R	R	**CF633**		Ø 19,05	South Africa
	86-88		R		**CF620**		Ø 15,87	Alu, Sedan, Wagon, Exc. 4x4
1.7 D, SW Eng.CD17 (40kW)	86-89		R	L	**CF632**		Ø 19,05	South Africa
	86-89		R	R	**CF633**		Ø 19,05	South Africa
	86-89		R		**CF620**		Ø 15,87	Alu, Sedan, Wagon, Exc. 4x4
Sentra IV (N14, B13) 10/90-6/95								
1.3 Eng.GA13DS	91-		R		**CF174**		Ø 15,87	Alu
1.4 i Eng.GA14DS (55kW)	90-		R		**CF174**		Ø 15,87	Alu
1.4 i 16v Eng.GA14DE (64kW)	91-		R		**CF174**		Ø 15,87	Alu
1.5 Eng.GA15DS (77kW)	91-		R		**CF174**		Ø 15,87	Alu
1.5 4WD Eng.GA15DS (77kW)	90-		R		**CF174**		Ø 15,87	Alu
1.6 16v, 4WD, SW Eng.GA16DE (73-75kW)	92-		R		**CF174**		Ø 15,87	Alu
1.6, 16v 4WD, SW Eng.GA16DS (66kW)	90-		R		**CF174**		Ø 15,87	Alu
1.7 D Eng.CD17 (40kW)	90-		R		**CF174**		Ø 15,87	Alu
1.7 D 4WD Eng.CD17 (40kW)	90-		R		**CF174**		Ø 15,87	Alu
2.0 D, SW Eng.CD20 (55kW)	90-		R		**CF174**		Ø 15,87	Alu
Serena (C23M) 11/92-12/09								
1.6 16v Eng.GA16DE (71kW)	93-		R		**CF184**		Ø 23,81	
2.0 16v Eng.SR20DE (93kW)	92-		R		**CF184**		Ø 23,81	
2.0 D Eng.LD20 (49kW)	92-		R		**CF184**		Ø 23,81	
2.3 D Eng.LD23 (55kW)	95-		R		**CF184**		Ø 23,81	
Silvia I (S110) 1/76-5/83								
1.8 T. Eng.CA18ET (68kW)	3/79-		R		**CF197**		Ø 20,64	Alu
Silvia II (S12) 4/84-9/88								
2.0 GP Eng.FJ20E (107kW)	84-88		R		**CF205**		Ø 22,22	Alu
Skyline I (R32) 1/72-1/93								
1.8 Eng.L18 (59kW)	9/72-7/77		R		**CF205**		Ø 22,22	Alu, Europe, Ti
	9/72-7/77		R		**CF407**		Ø 23,81	Alu, Europe, Van
2.0	-93		R		**CF628**		Ø 22,22	
2.4 K GT Eng.L24 (96kW)	9/72-7/77		R		**CF406**		Ø 22,22	Alu, Exc. Europe, GT, HT
	9/72-7/77		R		**CF205**		Ø 22,22	Alu, Europe, Ti
	9/72-7/77		R		**CF407**		Ø 23,81	Alu, Europe, Van
C110	12/72-11/75		R		**CF363**		Ø 20,64	Alu, Europe
C210	9/72-7/77		R		**CF406**		Ø 22,22	Alu, Exc. Europe
	9/72-7/77		R		**CF205**		Ø 22,22	Alu, Europe, Ti
	9/72-7/77		R		**CF407**		Ø 23,81	Alu, Europe, Van
Stanza I 7/77-1/83								
1.4 A10 Eng.A14 (48-49-59kW)	77-83		R		**CF197**		Ø 20,64	Alu
	77-83		R		**CF205**		Ø 22,22	Alu
Stanza II (T11) 8/81-12/85								
1.6 Eng.CA16S (61kW)	81-85		R		**CF517**	Uac	Ø 17,46	Alu, Sedan, SW 4x4
	81-85		R		**CF403**		Ø 17,46	Alu
	81-85		R		**CF505**		Ø 19,05	Alu, Cargo, SW (Exc. 4x4)
	81-85		R		**CF197**		Ø 20,64	Alu, Sedan, Van Wagon
1.7 TD Eng.CD17T	81-85		R		**CF403**		Ø 17,46	Alu
	81-85		R		**CF505**		Ø 19,05	Alu, Cargo, SW (Exc. 4x4)
	81-85		R		**CF197**		Ø 20,64	Alu, Sedan, Van Wagon
1.8, SGL Eng.CA18/ S (65-66kW)	81-85		R		**CF403**		Ø 17,46	Alu
	81-85		R		**CF505**		Ø 19,05	Alu, Cargo, SW (Exc. 4x4)
	81-85		R		**CF197**		Ø 20,64	Alu, Sedan, Van Wagon

		Spare Parts	F/R	L/R	FRITECH ref.		DIMENSIONS mm.	NOTE
Sunny (140Y, 150Y) 1/70-2/82								
1.4, SW Eng.A14 (48-49-59kW)	70-82		R		**CF197**		Ø 20,64	Alu
1.5, SW Eng.A15/ S (51kW)	79-82		R		**CF197**		Ø 20,64	Alu
Sunny I (B) 1/71-2/82								
110	71-73		R		**CF362**		Ø 17,46	Alu, Front Disc Brake
	71-73		R		**CF363**		Ø 20,64	Alu, Front Drum Brake
120, Pick-up Eng.A12 (38kW)	71-82		R		**CF363**		Ø 20,64	Alu
210	73-10/77		R		**CF362**		Ø 17,46	Alu, Front Disc Brake
	73-10/77		R		**CF363**		Ø 20,64	Alu, Front Drum Brake
310	79-82		R		**CF608**		Ø 17,46	Alu
Sunny II (B11), SW 3/82-9/87								
1.3, Coupe Eng.E13S (44kW)	82-87		R		**CF204**	Nabco	Ø 17,46	Alu, Europe
	82-87		R		**CF519**		Ø 19,05	Alu, Van
1.5, Coupe Eng.E15S (55kW)	3/82-86		R		**CF204**	Nabco	Ø 17,46	Alu, Europe
1.7 D Eng.CD17 (40kW)	3/82-86		R		**CF204**	Nabco	Ø 17,46	Alu, Europe
Sunny III (N13, B12) 6/86-10/91								
1.3 Eng.E13S (44kW)	86-91		R		**CF204**	Nabco	Ø 17,46	Alu
1.4 Eng.GA14S (55kW)	88-91		R		**CF204**	Nabco	Ø 17,46	Alu
1.5, SW, Coupe Eng.E15S (52kW)	86-88		R		**CF204**	Nabco	Ø 17,46	Alu
1.6 GTI 16v, Coupe Eng.CA16D (81kW)	87-88		R		**CF204**	Nabco	Ø 17,46	Alu
1.6 i 12v, SW, Coupe, 4WD Eng.GA16i (66kW)	88-91		R		**CF204**	Nabco	Ø 17,46	Alu
	88-91		R		**CF517**	Uac	Ø 17,46	Alu, Only SW
1.6, 4WD, Coupe, SW Eng.E16i (54kW)	86-90		R		**CF204**	Nabco	Ø 17,46	Alu
	86-90		R		**CF517**	Uac	Ø 17,46	Alu, Only SW
1.6, SW, Coupe Eng.E16S (62kW)	86-88		R		**CF204**	Nabco	Ø 17,46	Alu
	86-88		R		**CF517**	Uac	Ø 17,46	Alu, Only SW
1.7 D, SW Eng.CD17 (40kW)	86-89		R		**CF204**	Nabco	Ø 17,46	Alu
1.8 GTI 16v, Coupe Eng.CA18D (92kW)	89-91		R		**CF204**	Nabco	Ø 17,46	Alu
Sunny IV (N14) 10/90-6/95								
1.4 i Eng.GA14DS/ DE (55kW)	90-95		R		**CF174**		Ø 15,87	Alu, -ABS
1.6, 16v 4WD, SW Eng.GA16DS/ DE/ DEL (66kW)	90-95		R		**CF174**		Ø 15,87	Alu, -ABS
2.0 D, SW Eng.CD20 (55kW)	90-95		R		**CF174**		Ø 15,87	Alu, -ABS
Sunny IV (Y10) 10/90-6/95								
1.6, 16v 4WD, SW Eng.GA16DS/ DE (66kW)	90-95		R		**CF517**	Uac	Ø 17,46	Alu, Only SW
2.0 D, SW Eng.CD20 (55kW)	90-95		R		**CF517**	Uac	Ø 17,46	Alu, Only SW
Terrano I (WD21) 10/87-2/96								
2.4 i 4WD Eng.Z24i (74-76-79kW)	87-93		R		**CF494**	Nabco	Ø 23,81	Alu
2.7 TD 4WD Eng.TD27T (73kW)	89-96		R		**CF494**	Nabco	Ø 23,81	Alu
Terrano II (R20) 2/93-12/06								
2.4 4WD Eng.KA24E (85-87kW)	96-02		R		**CF179**	Bch	Ø 20,64	+ABS, 3p
	99-02		R		**CF803**	Bch	Ø 23,81	4 Porte, -ABS
	10/99-		R		**CF178**	Bdx	Ø 22,20	+/-ABS, 3p
	96-99		R		**CF696**	Luc	Ø 25,40	5p
	96-02		R		**CF247**		Ø 22,20	
	96-99		R		**CF184**		Ø 23,81	3p
2.4 i 12v 4WD Eng.KA24E (91kW)	93-96		R		**CF247**		Ø 22,20	Hardtop
	93-96		R		**CF184**		Ø 23,81	SW
2.7 TD 4WD Eng.TD27T (74kW)	93-02		R		**CF179**	Bch	Ø 20,64	+ABS, 3p
	99-02		R		**CF803**	Bch	Ø 23,81	4 Porte, -ABS
	10/99-02		R		**CF178**	Bdx	Ø 22,20	+/-ABS, 3p
	93-99		R		**CF696**	Luc	Ø 25,40	5p
	93-96		R		**CF247**		Ø 22,20	Hardtop
	93-99		R		**CF184**		Ø 23,81	SW, 3p
2.7 TDi 4WD Eng.TD27TI (92kW)	96-		R		**CF179**	Bch	Ø 20,64	+ABS, 3p
	99-02		R		**CF803**	Bch	Ø 23,81	4 Porte, -ABS
	10/99-		R		**CF178**	Bdx	Ø 22,20	+/-ABS, 3p
	96-99		R		**CF696**	Luc	Ø 25,40	5p
	96-		R		**CF247**		Ø 22,20	
	96-99		R		**CF184**		Ø 23,81	3p
3.0 Di 4WD Eng.ZD30Ti (113kW)	02-		R		**CF803**	Bch	Ø 23,81	4 Porte, -ABS
	02-		R		**CF178**	Bdx	Ø 22,20	3p
Tiida (C11X)/ Versa 9/07-12/12								
1.5 DCi Eng.K9K728 (78kW)	07-		R		**CF780**	Loc	Ø 19,05	Alu

NISSAN

		Spare Parts	F/R	L/R	FRITECH ref.		DIMENSIONS mm.	NOTE
1.6 Eng.HR16DE (81kW)	07-		R		**CF780**	Loc	Ø 19,05	Alu
1.8 Eng.MR18DE (93kW)	07-		R		**CF780**	Loc	Ø 19,05	Alu
Trade 1/86-12/04								
2.0 D Eng.LD20 (47-49kW)	86-90		R		**CF812**	Luc	Ø 22,20	
	91-		R		**CF177**		Ø 25,40	
2.8 D Eng.A428 (56-62kW)	86-89		R		**CF813**	Bdx	Ø 25,40	Spain
3.0 D Eng.BD-30II (63kW)	86-98		R		**CF812**	Luc	Ø 22,20	
	94-98		R		**CF831**		Ø 28,60	
Violet 1/73-1/81								
1.6 Eng.L16S (75kW)	73-77		R		**CF363**		Ø 20,64	Alu
	77-81		R		**CF197**		Ø 20,64	Alu
	77-81		R		**CF205**		Ø 22,22	Alu
X-Trail I (T30) 7/01-6/07								
2.0 16v Eng.QR20DE (103kW)	7/01-2/05				**PF637**		Ø 25,40	Alu
2.2 DCi Eng.YD22DDT (81-84-93kW)	7/01-2/05				**PF637**		Ø 25,40	Alu
2.2 DCi Eng.YD22DDTi (100kW)	12/03-2/05				**PF637**		Ø 25,40	Alu
2.5 Eng.QR25DE (121kW)	03-2/05				**PF637**		Ø 25,40	Alu
X-Trail II (T31) 7/07-11/13								
2.0 16v, FWD Eng.QR20DE (103kW)	07-				**PF925**	Bch	Ø 23,81	Alu, M/T
	07-				**PF926**	Bch	Ø 23,81	Alu, A/T
2.0 DCi Eng.M9R7 (110kW)	07-				**PF925**	Bch	Ø 23,81	Alu, M/T
	07-				**PF926**	Bch	Ø 23,81	Alu, A/T
2.0 DCi Eng.M9R760 (127kW)	07-				**PF925**	Bch	Ø 23,81	Alu, M/T
	07-				**PF926**	Bch	Ø 23,81	Alu, A/T
2.0, FWD Eng.MR20DE (104kW)	07-				**PF925**	Bch	Ø 23,81	Alu, M/T
	07-				**PF926**	Bch	Ø 23,81	Alu, A/T
2.5 16v, 4WD Eng.QR25DE (124kW)	07-				**PF925**	Bch	Ø 23,81	Alu, M/T
	07-				**PF926**	Bch	Ø 23,81	Alu, A/T

NISSAN LCV

AW 1 Ton 1/88-								
1.6	88-		R		**CF626**		Ø 25,40	South Africa
1.8	88-		R		**CF626**		Ø 25,40	South Africa
2.4	88-		R		**CF626**		Ø 25,40	South Africa
Cabstar II (10Q) 1/82-12/87								
2.0 Eng.Z20 (64kW)	82-12/87		R		**CF546**		Ø 22,20	
2.3 D Eng.SD23 (51-54kW)	87-12/87		R		**CF546**		Ø 22,20	
2.5 D Eng.SD25 (53kW)	82-87		R		**CF546**		Ø 22,20	
Cabstar II (15Q) 1/82-12/90								
2.0 Eng.Z20 (64kW)	82-12/87		R		**CF546**		Ø 22,20	
	89-90		R		**CF757**		Ø 25,40	
2.3 D Eng.TD23 (51kW)	1/87-12/87		R		**CF546**		Ø 22,20	
	89-90		R		**CF757**		Ø 25,40	
2.5 D Eng.TD25 (52-59kW)	82-87		R		**CF546**		Ø 22,20	
	89-90		R		**CF757**		Ø 25,40	
Cabstar IV (E) 1/98-9/06								
2.3 D Eng.LD23 (55kW)	1/98-09/06		R		**CF180**	Bdx	Ø 25,40	
2.5 D Eng.TD25 (55kW)	1/92-12/00		R		**CF180**	Bdx	Ø 25,40	
2.7 TDi Eng.TD27T (66kW)	1/98-9/06		R		**CF180**	Bdx	Ø 25,40	
3.0 TDi Eng.BD-30Ti (78-88-92kW)	04-		R		**CF180**	Bdx	Ø 25,40	
Interstar (X70) 7/02-12/11								
1.9 DCi Eng.F9Q772 (60kW)	03-				**PF806**	Bch	Ø 23,81	Alu, +ABS
	02-03				**PF503**	Bch	Ø 25,40	Alu, +ABS
	02-				**PF502**	Bch	Ø 25,40	Alu, -ABS
2.2 DCi Eng.G9T722 (66kW)	03-				**PF806**	Bch	Ø 23,81	Alu, +ABS
	02-03				**PF503**	Bch	Ø 25,40	Alu, +ABS
	02-				**PF502**	Bch	Ø 25,40	Alu, -ABS
2.5 DCi Eng.G9U632 (107kW)	9/06-				**PF806**	Bch	Ø 23,81	Alu, +ABS
	9/06-				**PF502**	Bch	Ø 25,40	Alu, -ABS
2.5 DCi Eng.G9U632 (88kW)	9/06-				**PF806**	Bch	Ø 23,81	Alu, +ABS
	9/06-				**PF502**	Bch	Ø 25,40	Alu, -ABS
2.5 DCi Eng.G9U720 (84kW)	03-				**PF806**	Bch	Ø 23,81	Alu, +ABS
	02-03				**PF503**	Bch	Ø 25,40	Alu, +ABS
	02-				**PF502**	Bch	Ø 25,40	Alu, -ABS

		Spare Parts	F/R	L/R	FRITECH ref.		DIMENSIONS mm.	NOTE
2.5 DCi Eng.G9U754 (73kW)	03-				**PF806**	Bch	Ø 23,81	Alu, +ABS
	03-				**PF502**	Bch	Ø 25,40	Alu, -ABS
3.0 DCi 140 Eng.ZD3A2 (100kW)	03-				**PF806**	Bch	Ø 23,81	Alu, +ABS
	03-				**PF502**	Bch	Ø 25,40	Alu, -ABS
Kubistar (X76, X80) 8/03-12/09								
1.2 Eng.D7F726 (44kW)	03-		R		**CF139**		Ø 22,00	Alu, +RC
	03-		R		**CF138**		Ø 22,00	Alu, -RC
	03-				**PF582**		Ø 22,20	Alu, +ABS, LHD
	03-				**PF252**		Ø 22,20	Alu, -ABS, LHD
1.2 16v Eng.D4F712 (55kW)	06-		R		**CF139**		Ø 22,00	Alu, +RC
	06-		R		**CF138**		Ø 22,00	Alu, -RC
	06-				**PF582**		Ø 22,20	Alu, +ABS, LHD
	06-				**PF252**		Ø 22,20	Alu, -ABS, LHD
1.2 16v Eng.D4F730 (55kW)	05-		R		**CF139**		Ø 22,00	Alu, +RC
	05-		R		**CF138**		Ø 22,00	Alu, -RC
	05-				**PF582**		Ø 22,20	Alu, +ABS, LHD
	05-				**PF252**		Ø 22,20	Alu, -ABS, LHD
1.5 DCi Eng.K9K (42kW)	03-		R		**CF139**		Ø 22,00	Alu, +RC
	03-		R		**CF138**		Ø 22,00	Alu, -RC
	03-				**PF582**		Ø 22,20	Alu, +ABS, LHD
	03-				**PF252**		Ø 22,20	Alu, -ABS, LHD
1.5 DCi Eng.K9K700/716 (50kW)	06-		R		**CF139**		Ø 22,00	Alu, +RC
	06-		R		**CF138**		Ø 22,00	Alu, -RC
	06-				**PF582**		Ø 22,20	Alu, +ABS, LHD
	06-				**PF252**		Ø 22,20	Alu, -ABS, LHD
1.5 DCi Eng.K9K704 (48kW)	03-		R		**CF139**		Ø 22,00	Alu, +RC
	03-		R		**CF138**		Ø 22,00	Alu, -RC
	03-				**PF582**		Ø 22,20	Alu, +ABS, LHD
	03-				**PF252**		Ø 22,20	Alu, -ABS, LHD
1.5 DCi Eng.K9K710/ 714 (45kW)	05-		R		**CF139**		Ø 22,00	Alu, +RC
	05-		R		**CF138**		Ø 22,00	Alu, -RC
	05-				**PF582**		Ø 22,20	Alu, +ABS, LHD
	05-				**PF252**		Ø 22,20	Alu, -ABS, LHD
1.5 DCi Eng.K9K710/ 722 (60kW)	03-		R		**CF139**		Ø 22,00	Alu, +RC
	03-		R		**CF138**		Ø 22,00	Alu, -RC
	03-				**PF582**		Ø 22,20	Alu, +ABS, LHD
	03-				**PF252**		Ø 22,20	Alu, -ABS, LHD
1.5 DCi Eng.K9K718 (62kW)	06-		R		**CF139**		Ø 22,00	Alu, +RC
	06-		R		**CF138**		Ø 22,00	Alu, -RC
	06-				**PF582**		Ø 22,20	Alu, +ABS, LHD
	06-				**PF252**		Ø 22,20	Alu, -ABS, LHD
1.6 16v Eng.K4M752 (70kW)	03-		R		**CF139**		Ø 22,00	Alu, +RC
	03-		R		**CF138**		Ø 22,00	Alu, -RC
	03-				**PF582**		Ø 22,20	Alu, +ABS, LHD
	03-				**PF252**		Ø 22,20	Alu, -ABS, LHD
NP300 8/08-								
2.5 DCi, 4WD Eng.YD25DDTi (98kW)	10-		R		**CF993**		Ø 22,20	Only 4WD
NV200 10/09-								
1.5 DCi Eng.K9K (63kW)	09-		R		**CF995**		Ø 22,20	
1.5 DCi Eng.K9K (66kW)	10-		R		**CF995**		Ø 22,20	
1.5 DCi Eng.K9K (81kW)	11-		R		**CF995**		Ø 22,20	
1.6 Eng.HR16DE (79-81kW)	09-		R		**CF995**		Ø 22,20	
Pick-Up (720) 1/80-3/86								
1.6 Eng.J16 (51-59kW)	80-81		R		**CF501**		Ø 15,87	Alu, 1 Ton
	80-81		R		**CF522**		Ø 17,46	Alu
1.8 Eng.L18 (59kW)	83-86		R		**CF518**		Ø 14,28	Alu
2.2 4WD Eng.Z22 (71kW)	83-86		R		**CF502**	Nabco	Ø 17,46	Alu
2.2 D Eng.SD22 (47kW)	82-84		R		**CF518**		Ø 14,28	Alu
2.4 4WD	83-86		R		**CF502**	Nabco	Ø 17,46	Alu
Pick-Up/King Cab (D21) 9/85-2/98								
2.0 Eng.Z20 (64-66kW)	85-91		R		**CF502**	Nabco	Ø 17,46	Alu
2.4 i 12v Eng.KA24E (91kW)	92-98		R		**CF494**	Nabco	Ø 23,81	Alu
	92-98		R		**CF495**		Ø 22,20	Alu

NISSAN LCV

		Spare Parts	F/R	L/R	FRITECH ref.		DIMENSIONS mm.	NOTE
2.4 i 12v 4WD Eng.KA24E (93kW)	92-98		R		**CF304**		Ø 20,60	Alu, 1 Ton
2.4 i, 4WD Eng.Z24i (74kW)	86-92		R		**CF521**	Nabco	Ø 15,87	Alu, 1 Ton
2.5 D 4WD Eng.SD25 (53-55kW)	89-91		R		**CF521**	Nabco	Ø 15,87	Alu
	85-89		R		**CF514**		Ø 17,46	Alu
2.5 TD, 4WD Eng.TD25 (55-59-61kW)	87-92		R		**CF521**	Nabco	Ø 15,87	Alu
	92-98		R		**CF965**	Nabco	Ø 22,20	Alu
	92-98		R		**CF304**		Ø 20,60	Alu
2.7 TD, 4WD Eng.TD27 (58-73kW)	87-92		R		**CF521**	Nabco	Ø 15,87	Alu
	92-98		R		**CF304**		Ø 20,60	Alu
3.0 i V6 4WD Eng.VG30E (125-149-109kW)	90-92		R		**CF521**	Nabco	Ø 15,87	Alu
	92-98		R		**CF304**		Ø 20,60	Alu
Pick-Up/King Cab II (D22) 2/98-12/07								
2.4 i 4WD Eng.KA24DE (98kW)	02-		R		**CF993**		Ø 22,20	
2.4 i, 4WD Eng.KA24E (88kW)	98-		R		**CF494**	Nabco	Ø 23,81	Alu
2.5 Di, 4WD Eng.YD25DDTi (98kW)	02-		R		**CF993**		Ø 22,20	
2.5 TD 4WD Eng.TD25TI (76kW)	98-		R		**CF494**	Nabco	Ø 23,81	Alu
2.5 TD, 4WD Eng.TD25 (61kW)	98-		R		**CF494**	Nabco	Ø 23,81	Alu
Primastar (X83) 3/01-								
1.9 DCi Eng.F9Q760 (60kW)	02-06				**PF978**	Trw	Ø 20,64	+ABS, -ESP
	01-				**PF622**	Trw	Ø 25,40	Alu, +ESP, +TC
	01-				**PF624**	Trw	Ø 20,64	Ch -4V602167, Alu, -ESP, -TC
	01-				**PF623**	Trw	Ø 20,64	Ch 4V602168-, Alu, -ESP, +TC
	01-				**PF620**	Trw	Ø 25,40	Ch -4V602167, Alu, -ESP, -TC
	01-				**PF621**	Trw	Ø 25,40	Ch 4V602168-, Alu, -ESP, -TC
1.9 DCi Eng.F9Q762 (74kW)	02-06				**PF978**	Trw	Ø 20,64	+ABS, -ESP
	01-				**PF622**	Trw	Ø 25,40	Alu, +ESP, +TC
	01-				**PF624**	Trw	Ø 20,64	Ch -4V602167, Alu, -ESP, -TC
	01-				**PF623**	Trw	Ø 20,64	Ch 4V602168-, Alu, -ESP, +TC
	01-				**PF620**	Trw	Ø 25,40	Ch -4V602167, Alu, -ESP, -TC
	01-				**PF621**	Trw	Ø 25,40	Ch 4V602168-, Alu, -ESP, -TC
2.0 Eng.F4R720/ 722 (86kW)	02-				**PF978**	Trw	Ø 20,64	+ABS, -ESP
	01-				**PF622**	Trw	Ø 25,40	Alu, +ESP, +TC
	01-				**PF624**	Trw	Ø 20,64	Ch -4V602167, Alu, -ESP, -TC
	01-				**PF623**	Trw	Ø 20,64	Ch 4V602168-, Alu, -ESP, +TC
	01-				**PF620**	Trw	Ø 25,40	Ch -4V602167, Alu, -ESP, -TC
	01-				**PF621**	Trw	Ø 25,40	Ch 4V602168-, Alu, -ESP, -TC
	10/06-				**PF979**		Ø 20,64	+ABS, +ESP
	11/06-				**PF980**		Ø 20,64	-ABS
2.0 DCi 115 Eng.M9R780 (84kW)	03-				**PF622**	Trw	Ø 25,40	Alu, +ESP, +TC
	03-				**PF624**	Trw	Ø 20,64	Ch -4V602167, Alu, -ESP, -TC
	03-				**PF623**	Trw	Ø 20,64	Ch 4V602168-, Alu, -ESP, +TC
	03-				**PF620**	Trw	Ø 25,40	Ch -4V602167, Alu, -ESP, -TC
	03-				**PF621**	Trw	Ø 25,40	Ch 4V602168-, Alu, -ESP, -TC
2.0 DCi 90 Eng.M9R780 (66kW)	11/06-				**PF978**	Trw	Ø 20,64	+ABS, -ESP
	03-				**PF622**	Trw	Ø 25,40	Alu, +ESP, +TC
	03-				**PF624**	Trw	Ø 20,64	Ch -4V602167, Alu, -ESP, -TC
	03-				**PF623**	Trw	Ø 20,64	Ch 4V602168-, Alu, -ESP, +TC
	03-				**PF620**	Trw	Ø 25,40	Ch -4V602167, Alu, -ESP, -TC
	03-				**PF621**	Trw	Ø 25,40	Ch 4V602168-, Alu, -ESP, -TC
	11/06-				**PF979**		Ø 20,64	+ABS, +ESP
	11/06-				**PF980**		Ø 20,64	-ABS
2.5 DCi Eng.G9U630 (107kW)	11/06-				**PF978**	Trw	Ø 20,64	+ABS, -ESP
	03-				**PF622**	Trw	Ø 25,40	Alu, +ESP, +TC
	03-				**PF624**	Trw	Ø 20,64	Ch -4V602167, Alu, -ESP, -TC
	03-				**PF623**	Trw	Ø 20,64	Ch 4V602168-, Alu, -ESP, +TC
	03-				**PF620**	Trw	Ø 25,40	Ch -4V602167, Alu, -ESP, -TC
	03-				**PF621**	Trw	Ø 25,40	Ch 4V602168-, Alu, -ESP, -TC
	11/06-				**PF979**		Ø 20,64	+ABS, +ESP
	11/06-				**PF980**		Ø 20,64	-ABS
2.5 DCi Eng.G9U720 (84kW)	11/06-				**PF978**	Trw	Ø 20,64	+ABS, -ESP
	11/06-				**PF980**		Ø 20,64	-ABS
2.5 DCi Eng.G9U730 (99kW)	02-06				**PF978**	Trw	Ø 20,64	+ABS, -ESP
	03-				**PF622**	Trw	Ø 25,40	Alu, +ESP, +TC
	03-				**PF624**	Trw	Ø 20,64	Ch -4V602167, Alu, -ESP, -TC

NISSAN LCV

		Spare Parts	F/R	L/R	FRITECH ref.		DIMENSIONS mm.	NOTE
2.5 DCi Eng.G9U730 (99kW)	03-				**PF623**	Trw	Ø 20,64	Ch 4V602168-, Alu, -ESP, +TC
	03-				**PF620**	Trw	Ø 25,40	Ch -4V602167, Alu, -ESP, -TC
	03-				**PF621**	Trw	Ø 25,40	Ch 4V602168-, Alu, -ESP, -TC
Sunny III (Y10) Van 11/90-4/01								
1.6 16v Eng.GA16DE (66kW)	92-		R		**CF517**	Uac	Ø 17,46	Alu
1.7 D Eng.CD17 (40kW)	90-		R		**CF517**	Uac	Ø 17,46	Alu
Terrano Van (R20) 6/98-								
2.7 TDi 4WD Eng.TD27TI (92kW)	93-02		R		**CF179**	Bch	Ø 20,64	+ABS, 3p
	99-02		R		**CF803**	Bch	Ø 23,81	4 Porte, -ABS
	98-		R		**CF178**	Bdx	Ø 22,20	+/-ABS, 3p
	98-99		R		**CF696**	Luc	Ø 25,40	5p
	98-		R		**CF247**		Ø 22,20	
	98-99		R		**CF184**		Ø 23,81	3p
3.0 Di 4WD Eng.ZD30 (113kW)	03-		R		**CF803**	Bch	Ø 23,81	4 Porte, -ABS
	03-		R		**CF178**	Bdx	Ø 22,20	3p
TR Van 1/87-1/89								
All models	87-89		R		**CF505**		Ø 19,05	Alu
Urvan I (E23) 7/81-11/88								
2.0 Eng.H20 (55kW)	12/81-82		R		**CF502**	Nabco	Ø 17,46	Alu
	7/81-11/81		R		**CF522**		Ø 17,46	Alu
2.0 Eng.Z20 (64kW)	82-88		R		**CF502**	Nabco	Ø 17,46	Alu
2.2 D Eng.SD23 (47kW)	81-82		R		**CF502**	Nabco	Ø 17,46	Alu
2.3 D Eng.SD23 (50-51kW)	82-88		R		**CF502**	Nabco	Ø 17,46	Alu
Urvan II (E24) 5/87-8/00								
2.0 Eng.Z20/ S (64-66kW)	87-92		R		**CF503**		Ø 20,64	Alu
2.3 D Eng.TD23 (51kW)	88-		R		**CF503**		Ø 20,64	Alu
2.4 i Eng.Z24i (72-74-79kW)	89-92		R		**CF503**		Ø 20,64	Alu
2.5 D Eng.TD25 (59kW)	88-92		R		**CF503**		Ø 20,64	Alu
Vanette I (C12) 1/83-12/87								
1.5 Eng.A15 (51kW)	83-87		R		**CF505**		Ø 19,05	Alu, Van
	85-87		R		**CF205**		Ø 22,22	Alu
2.0 D Eng.LD20 (43-47-49kW)	83-87		R		**CF505**		Ø 19,05	Alu, Van
	85-87		R		**CF205**		Ø 22,22	Alu
Vanette II (C22) 10/86-12/95								
1.5 Eng.A15S (51kW)	86-95		R		**CF505**		Ø 19,05	Alu, Exc. Switzerland/Germany, Van
	86-95		R		**CF197**		Ø 20,64	Alu, Switzerland/Germany, Van
	86-		R		**CF205**		Ø 22,22	Alu
2.0 D Eng.LD20 (47-49kW)	86-95		R		**CF505**		Ø 19,05	Alu, Exc. Switzerland/Germany, Van
	86-95		R		**CF197**		Ø 20,64	Alu, Switzerland/Germany, Van
	86-		R		**CF205**		Ø 22,22	Alu
2.4 i Eng.Z24i (74-77kW)	86-93		R		**CF197**		Ø 20,64	Alu
Vanette III Cargo (HC23) 1/95-12/09								
1.6 Eng.GA16DE (71-72-75kW)	95-		R		**CF184**		Ø 23,81	
2.0 D Eng.LD20 (49kW)	95-		R		**CF184**		Ø 23,81	
2.3 D Eng.LD23 (55kW)	95-		R		**CF184**		Ø 23,81	

NISSAN USA TRUCK

Quest								
All models	93-98		R		**CF958**		Ø 25,40	

NSU

1200 9/69-11/71								
1.2 C (40kW)	69-71		R		**CF267**		Ø 15,87	
Prinz 8/61-3/74								
0.6, 4L (22kW)	61-71		R		**CF267**		Ø 15,87	
1.0 (29kW)	69-74		R		**CF267**		Ø 15,87	
1.2 (48kW)	69-74		R		**CF267**		Ø 15,87	

OLDSMOBILE

442								
All models	64-66		R		**CF945**		Ø 23,81	
88								
Jetstar	64-66		R		**CF945**		Ø 23,81	

OLDSMOBILE

		Spare Parts	F/R	L/R	FRITECH ref.		DIMENSIONS mm.	NOTE
88, 98 Custom, Delta, Regency, Royale								
All models	85-86		R		**CF937**		Ø 19,05	FWD
	86-97		R		**CF933**		Ø 22,00	FWD
	77-85		R		**CF934**		Ø 22,20	RWD, 9Inch Brake
	86-97		R		**CF944**		Ø 22,20	Exc. SW, FWD
	71-91		R		**CF931**		Ø 23,81	Exc. SW, Commercial, RWD, 11Inch Brake
	91-93		R		**CF957**		Ø 23,81	
	71-12/92		R		**CF932**		Ø 25,40	SW, RWD, HDB
Achieva								
All models	92-98		R		**CF952**		Ø 17,46	
Bravada 1/91-12/02								
All models	1/91-12/91		R		**CF928**		Ø 19,05	
	92-96		R		**CF762**		Ø 19,05	
Calais I								
All models	85-87		R		**CF930**		Ø 15,87	
Calais II								
All models	87-90		R		**CF940**		Ø 15,80	Exc. Performance package
Calais III								
All models	1/91-12/91		R		**CF952**		Ø 17,46	
Ciera - Cutlass								
All models	82-87		R		**CF930**		Ø 15,87	HDB
	82-87		R		**CF927**		Ø 17,46	SW, Exc. Diesel
	88-92		R		**CF952**		Ø 17,46	Exc. SW
	83-87		R		**CF937**		Ø 19,05	Diesel, Exc. SW, HDB
	88-92		R		**CF784**		Ø 19,05	SW, HDB
	88-92		R		**CF951**		Ø 20,64	SW, FR
	94-96		R		**CF933**		Ø 22,00	
	94-96		R		**CF944**		Ø 22,20	FWD
	97-99		R		**CF955**		Ø 22,20	
Cutlass Supreme I 1/64-1/88								
All models	78-88		R		**CF928**		Ø 19,05	RWD
	70-75		R		**CF934**		Ø 22,20	
	64-66		R		**CF945**		Ø 23,81	
	76-77		R		**CF931**		Ø 23,81	
F85								
All models	64-69		R		**CF945**		Ø 23,81	
Firenza II								
All models	85-88		R		**CF940**		Ø 15,80	SW, Attached 2 Hole/Fori
	82-87		R		**CF930**		Ø 15,87	Exc. SW
	82-86		R		**CF927**		Ø 17,46	SW
	85-86		R		**CF952**		Ø 17,46	Exc. SW
Omega								
All models	80-84		R		**CF927**		Ø 17,46	
	73-75		R		**CF934**		Ø 22,20	11Inch Brake
	76-79		R		**CF945**		Ø 23,81	
	1/76-12/76		R		**CF932**		Ø 25,40	9,5Inch Brake
Silhouette Van								
All models	90-91		R		**CF784**		Ø 19,05	
	91-93		R		**CF957**		Ø 23,81	
Toronado - Trofeo								
All models	79-83		R		**CF946**		Ø 19,05	
	66-69		R		**CF953**		Ø 22,20	
	70-78		R		**CF931**		Ø 23,81	
Vista Cruiser - Cutlass Cruiser								
All models	78-83		R		**CF928**		Ø 19,05	
	73-77		R		**CF931**		Ø 23,81	

OM (CARRELLI ELEVATORI)

OM								
D12C			R		**CF560**	Knott	Ø 23,81	
			R		**CF584**	Per	Ø 23,81	
D15			R		**CF560**	Knott	Ø 23,81	
			R		**CF584**	Per	Ø 23,81	

		Spare Parts	F/R	L/R	FRITECH ref.		DIMENSIONS mm.	NOTE
D20CL			R		**CF560**	Knott	Ø 23,81	
			R		**CF584**	Per	Ø 23,81	
DI30			R		**CF266**		Ø 34,92	
DI40 C			R		**CF266**		Ø 34,92	
Dim 12, 15			R		**CF173**		Ø 22,20	
					PF011		Ø 19,05	
Dim 20			R		**CF793**		Ø 22,20	New Version
			R		**CF238**		Ø 25,40	
					PF012		Ø 25,40	Old version
E40N			R		**CF266**		Ø 34,92	
Still R50-15	98-		R		**CF173**		Ø 22,20	
	98-				**PF011**		Ø 19,05	
U18/ U20/ U22			R		**CF560**	Knott	Ø 23,81	
			R		**CF584**	Per	Ø 23,81	

OPEL

Adam 2/13-								
1.2 Eng.A12XEL (51kW)	13-		R		**CF780**	Loc	Ø 19,05	Alu
	13-				**PF699**	Bch	Ø 22,20	Alu
	13-				**PZ146**	Fte	Ø 15,87	Alu
1.4 Eng.A14XEL (64kW)	13-		R		**CF780**	Loc	Ø 19,05	Alu
	13-				**PF699**	Bch	Ø 22,20	Alu
	13-				**PZ146**	Fte	Ø 15,87	Alu
1.4 Eng.A14XER (74kW)	13-		R		**CF780**	Loc	Ø 19,05	Alu
	13-				**PF699**	Bch	Ø 22,20	Alu
	13-				**PZ146**	Fte	Ø 15,87	Alu
1.4 GPL Eng.A14XEL (64kW)	13-		R		**CF780**	Loc	Ø 19,05	Alu
	13-				**PF699**	Bch	Ø 22,20	Alu
Agila A 9/00-12/07								
1.0 12v Eng.Z10XE (43kW)	00-		R		**CF677**	Loc	Ø 15,87	Alu
	9/00-				**PF381**	Bch	Ø 20,64	Alu, +ABS
	9/00-				**PF380**	Bch	Ø 20,64	Alu, -ABS
1.0 12v Eng.Z10XEP (44kW)	8/03-		R		**CF677**	Loc	Ø 15,87	Alu
	8/03-				**PF381**	Bch	Ø 20,64	Alu, +ABS
	8/03-				**PF380**	Bch	Ø 20,64	Alu, -ABS
1.2 16v Eng.Z12XE (55kW)	00-		R		**CF677**	Loc	Ø 15,87	Alu
	9/00-				**PF381**	Bch	Ø 20,64	Alu, +ABS
	9/00-				**PF380**	Bch	Ø 20,64	Alu, -ABS
1.2 16v Twinport Eng.Z12XEP (59kW)	04-		R		**CF677**	Loc	Ø 15,87	Alu
	7/04-				**PF381**	Bch	Ø 20,64	Alu, +ABS
	7/04-				**PF380**	Bch	Ø 20,64	Alu, -ABS
1.3 CDTi 16v Eng.Z13DT (51kW)	8/03-		R		**CF677**	Loc	Ø 15,87	Alu
	8/03-				**PF381**	Bch	Ø 20,64	Alu, +ABS
	8/03-				**PF380**	Bch	Ø 20,64	Alu, -ABS
Agila B 1/08-12/14								
1.0 Eng.K10B (50kW)	11-		R		**CF808**	Bch	Ø 19,05	Alu
	11-				**PF901**	Bch	Ø 23,20	Alu, +ESP
	11-				**PF886**	Bch	Ø 22,20	Alu, -ESP
1.0 12v Eng.K10B (48kW)	08-		R		**CF808**	Bch	Ø 19,05	Alu
	08-				**PF901**	Bch	Ø 23,20	Alu, +ESP
	08-				**PF886**	Bch	Ø 22,20	Alu, -ESP
1.0 LPG Eng.K10B (48kW)	10-		R		**CF808**	Bch	Ø 19,05	Alu
	10-				**PF901**	Bch	Ø 23,20	Alu, +ESP
	10-				**PF886**	Bch	Ø 22,20	Alu, -ESP
1.2 16v Eng.K12B (63kW)	08-		R		**CF808**	Bch	Ø 19,05	Alu
	08-				**PF901**	Bch	Ø 23,20	Alu, +ESP
	08-				**PF886**	Bch	Ø 22,20	Alu, -ESP
1.2 16v Eng.K12B (69kW)	08-		R		**CF808**	Bch	Ø 19,05	Alu
	08-				**PF901**	Bch	Ø 23,20	Alu, +ESP
	08-				**PF886**	Bch	Ø 22,20	Alu, -ESP
1.2 LPG Eng.K12B (63kW)	07-		R		**CF808**	Bch	Ø 19,05	Alu
	07-				**PF901**	Bch	Ø 23,20	Alu, +ESP
	07-				**PF886**	Bch	Ø 22,20	Alu, -ESP

OPEL

		Spare Parts	F/R	L/R	FRITECH ref.		DIMENSIONS mm.	NOTE
1.3 CDTi 16v Eng.Z13DTJ (55kW)	08-		R		**CF808**	Bch	Ø 19,05	Alu
	08-				**PF901**	Bch	Ø 23,20	Alu, +ESP
	08-				**PF886**	Bch	Ø 22,20	Alu, -ESP
Ascona A 10/70-8/75								
1.2 Eng.12S (44kW)	72-75		R		**CF365**		Ø 15,87	
	-75				**PF160**	Del(H)	Ø 20,64	Ch 9662825-
1.6 S Eng.16S (55-59kW)	8/70-		R		**CF339**		Ø 15,87	Ch -9662824
	-75		R		**CF233**		Ø 19,05	Ch 9662825-
	-75				**PF160**	Del(H)	Ø 20,64	Ch 9662825-
1.9 Eng.19S (65-66kW)	71-		R		**CF339**		Ø 15,87	Ch -9662824
	-75		R		**CF233**		Ø 19,05	Ch 9662825-
	-75				**PF160**	Del(H)	Ø 20,64	Ch 9662825-
Ascona B / Cavalier I 9/75-8/81								
1.2 Eng.12N (40kW)	76-79		R		**CF365**		Ø 15,87	Exc. Sweden
	76-79		R		**CF394**		Ø 19,05	Sweden, HDB
	76-79		R		**CF233**		Ø 19,05	Exc. Mod. L
	76-79				**PF160**	Del(H)	Ø 20,64	LHD
1.2 Eng.12S (44kW)	75-79		R		**CF365**		Ø 15,87	Exc. Sweden
	75-79		R		**CF394**		Ø 19,05	Sweden, HDB
	75-79				**PF160**	Del(H)	Ø 20,64	LHD
1.3 Eng.13N (44kW)	79-81		R		**CF365**		Ø 15,87	Exc. Sweden
	79-81		R		**CF394**		Ø 19,05	Sweden, HDB
	79-81		R		**CF233**		Ø 19,05	Mod. S
	79-81				**PF160**	Del(H)	Ø 20,64	LHD
1.3 Eng.13S (55kW)	79-81		R		**CF365**		Ø 15,87	Exc. Sweden
	79-81		R		**CF394**		Ø 19,05	Sweden, HDB
	79-81		R		**CF233**		Ø 19,05	Mod. S
	79-81				**PF160**	Del(H)	Ø 20,64	LHD
1.6 Eng.16N (44kW)	75-81		R		**CF365**		Ø 15,87	Exc. Sweden, M/T
	75-81		R		**CF394**		Ø 19,05	Sweden, HDB
	75-81		R		**CF233**		Ø 19,05	A/T
	75-81				**PF160**	Del(H)	Ø 20,64	LHD
1.6 Eng.16S (55kW)	75-81		R		**CF365**		Ø 15,87	Exc. Sweden, M/T
	75-81		R		**CF394**		Ø 19,05	Sweden, HDB
	75-81		R		**CF233**		Ø 19,05	A/T
	75-81				**PF160**	Del(H)	Ø 20,64	LHD
1.9 Eng.19S (66kW)	75-81		R		**CF233**		Ø 19,05	
	75-81				**PF160**	Del(H)	Ø 20,64	LHD
2.0 Eng.20E (81kW)	79-81		R		**CF233**		Ø 19,05	
	79-81				**PF160**	Del(H)	Ø 20,64	LHD
2.0 Eng.20N (66kW)	77-81		R		**CF233**		Ø 19,05	
	77-81				**PF160**	Del(H)	Ø 20,64	LHD
2.0 Eng.20S (74kW)	77-81		R		**CF233**		Ø 19,05	
	77-81				**PF160**	Del(H)	Ø 20,64	LHD
2.0 D Eng.20D (43kW)	78-81		R		**CF233**		Ø 19,05	
	78-81				**PF160**	Del(H)	Ø 20,64	LHD
Ascona C / Cavalier II 9/81-8/88								
1.3 Eng.13N (44kW)	81-		R		**CF008**		Ø 17,46	Ch -G10001772
	-86		R		**CF009**		Ø 17,46	Ch G6000001-
	81-88		R		**CF727**		Ø 19,05	SW, FWD
	81-				**PF109**	Del(BD)	Ø 20,64	Ch -G10001772, +BFR
	81-86				**PF164**	Del(CN,CZ)	Ø 20,64	Alu
1.3 Eng.13S (55kW)	81-		R		**CF008**		Ø 17,46	Ch -G10001772
	-88		R		**CF009**		Ø 17,46	Ch G6000001-
	81-88		R		**CF727**		Ø 19,05	SW, FWD
	81-				**PF109**	Del(BD)	Ø 20,64	Ch -G10001772, +BFR
	81-88				**PF164**	Del(CN,CZ)	Ø 20,64	Alu
1.6 Eng.16N/ NZ (55kW)	86-		R		**CF008**		Ø 17,46	Ch -G6000000
	-88		R		**CF009**		Ø 17,46	Ch G6000001-
	86-				**PF109**	Del(BD)	Ø 20,64	Ch -G10001772, +BFR
	86-88				**PF164**	Del(CN,CZ)	Ø 20,64	Alu
1.6 Eng.16SH (66kW)	81-		R		**CF008**		Ø 17,46	Ch -G6000000
	-86		R		**CF009**		Ø 17,46	Ch G6000001-
	81-88		R		**CF727**		Ø 19,05	SW, FWD

		Spare Parts	F/R	L/R	FRITECH ref.		DIMENSIONS mm.	NOTE
1.6 Eng.16SH (66kW)	81-				**PF109**	Del(BD)	Ø 20,64	Ch -G10001772, +BFR
	81-86				**PF164**	Del(CN,CZ)	Ø 20,64	Alu
1.6 Eng.16SV (60kW)	86-		R		**CF008**		Ø 17,46	Ch -G6000000
	-88		R		**CF009**		Ø 17,46	Ch G6000001-
	86-				**PF109**	Del(BD)	Ø 20,64	Ch -G10001772, +BFR
	86-88				**PF164**	Del(CN,CZ)	Ø 20,64	Alu
1.6 D Eng.16D/ 16DA (40kW)	82-		R		**CF008**		Ø 17,46	Ch -G6000000
	-88		R		**CF009**		Ø 17,46	Ch G6000001-
	81-88		R		**CF727**		Ø 19,05	SW, FWD
	82-				**PF109**	Del(BD)	Ø 20,64	Ch -G10001772, +BFR
	82-88				**PF164**	Del(CN,CZ)	Ø 20,64	Alu
1.6 i, Kat Eng.C16LZ/ E16NZ (55kW)	86-		R		**CF008**		Ø 17,46	Ch -G6000000
	-88		R		**CF009**		Ø 17,46	Ch G6000001-
	86-				**PF109**	Del(BD)	Ø 20,64	Ch -G10001772, +BFR
	86-88				**PF164**	Del(CN,CZ)	Ø 20,64	Alu
1.8 Eng.18E (85kW)	82-		R		**CF008**		Ø 17,46	Ch -G6000000
	-86		R		**CF009**		Ø 17,46	Ch G6000001-
	82-				**PF109**	Del(BD)	Ø 20,64	Ch -G10001772, +BFR
	82-86				**PF166**	Del(BH)	Ø 20,64	
	82-86				**PF164**	Del(CN,CZ)	Ø 20,64	Alu
1.8 Eng.E18NV (62kW)	87-		R		**CF008**		Ø 17,46	Ch -G6000000
	-88		R		**CF009**		Ø 17,46	Ch G6000001-
	87-				**PF109**	Del(BD)	Ø 20,64	Ch -G10001772, +BFR
	87-88				**PF166**	Del(BH)	Ø 20,64	
	87-88				**PF164**	Del(CN,CZ)	Ø 20,64	Alu
1.8 i Eng.C18NE/ S18NV (74kW)	-86		R		**CF008**		Ø 17,46	Ch -G6000000
	-86		R		**CF009**		Ø 17,46	Ch G6000001-
	-86				**PF109**	Del(BD)	Ø 20,64	Ch -G10001772, +BFR
	-86				**PF166**	Del(BH)	Ø 20,64	
	-86				**PF164**	Del(CN,CZ)	Ø 20,64	Alu
2.0 Eng.20E (81kW)	81-86		R		**CF727**		Ø 19,05	SW, FWD
2.0 Eng.20N (66kW)	81-86		R		**CF727**		Ø 19,05	SW, FWD
2.0 Eng.20S (74kW)	81-86		R		**CF727**		Ø 19,05	SW, FWD
2.0 i Eng.C20NEF (74kW)	87-		R		**CF008**		Ø 17,46	Ch -G6000000
	-88		R		**CF009**		Ø 17,46	Ch G6000001-
	87-88				**PF164**	Del(CN,CZ)	Ø 20,64	Alu
2.0 i GT Eng.20SEH (95kW)	87-88		R		**CF074**		Ø 19,05	
	87-88				**PF164**	Del(CN,CZ)	Ø 20,64	Alu
2.0 i, Kat Eng.20NE/ C20NE (85kW)	86-88		R		**CF009**		Ø 17,46	
	86-88				**PF164**	Del(CN,CZ)	Ø 20,64	Alu
Astra D, SW 9/79-8/91								
1.0 Eng.10S (29-38kW)	81-		R		**CF394**		Ø 19,05	Ch -C2518194
	-86		R		**CF152**		Ø 19,05	Ch C2518195-
	81-86				**PF109**	Del(BD)	Ø 20,64	+BFR, +Servo
	81-86				**PF110**	Del(BE)	Ø 20,64	+BFR, +Servo
1.2 Eng.12S (40-44kW)	82-		R		**CF394**		Ø 19,05	Ch -C2518194
	-84		R		**CF152**		Ø 19,05	Ch C2518195-
	82-84				**PF109**	Del(BD)	Ø 20,64	+BFR, +Servo
	82-84				**PF110**	Del(BE)	Ø 20,64	+BFR, +Servo
1.3 Eng.13S (55kW)	79-		R		**CF394**		Ø 19,05	Ch -C2518194
	-84		R		**CF152**		Ø 19,05	Ch C2518195-
	79-84		R		**CF233**		Ø 19,05	HDB
	79-84				**PF109**	Del(BD)	Ø 20,64	+BFR, +Servo
	79-84				**PF110**	Del(BE)	Ø 20,64	+BFR, +Servo
1.6 Eng.16SH (66kW)	-84		R		**CF153**		Ø 17,46	Ch E2501708-
	-84				**PF109**	Del(BD)	Ø 20,64	Ch E2501708-, +BFR, +Servo
	-84				**PF110**	Del(BE)	Ø 20,64	Ch E2501708-, +BFR, +Servo
1.6 D Eng.16DA (40kW)	-84		R		**CF153**		Ø 17,46	Ch E2501708-
	-84				**PF109**	Del(BD)	Ø 20,64	Ch E2501708-, +BFR, +Servo
1.8 GTE Eng.18E/ 18SE (82-85kW)	83-86		R		**CF008**		Ø 17,46	
	83-86				**PF109**	Del(BD)	Ø 20,64	+BFR, +Servo
	83-86				**PF166**	Del(BH)	Ø 20,64	+Servo

OPEL

		Spare Parts	F/R	L/R	FRITECH ref.		DIMENSIONS mm.	NOTE
Astra F Classic, SW 1/98-3/04								
1.4 i Eng.X14NZ/ C/ SZ (44kW)			R		**CF009**		Ø 17,46	Ch -R2500000
			R		**CF074**		Ø 19,05	Ch R2500001-
			R		**CF185**		Ø 19,05	Ch R2500001-, Alu
	98-				**PF214**	Ate	Ø 22,20	+ABS
	98-				**PF219**	Ate	Ø 22,20	-ABS
	98-				**PF038**	Del(EB)	Ø 20,64	Alu, -ABS
	98-				**PF198**	Del(EJ)	Ø 22,20	Alu, +ABS
	98-				**PF199**	Del(EK)	Ø 22,20	Alu, -ABS
1.6 16v Eng.X16XEL/ Z16XE (74kW)			R		**CF009**		Ø 17,46	Ch -R2500000
			R		**CF074**		Ø 19,05	Ch R2500001-
			R		**CF185**		Ø 19,05	Ch R2500001-, Alu
	98-				**PF214**	Ate	Ø 22,20	+ABS
	98-				**PF038**	Del(EB)	Ø 20,64	Alu, -ABS
	98-				**PF198**	Del(EJ)	Ø 22,20	Alu, +ABS
1.6 i 16v Eng.X16SZR (55kW)	98-		R		**CF185**		Ø 19,05	Alu
	98-				**PF214**	Ate	Ø 22,20	+ABS
	98-				**PF038**	Del(EB)	Ø 20,64	Alu, -ABS
Astra F, SW 9/91-9/98								
1.4 i Eng.C14NZ (44kW)			R		**CF009**		Ø 17,46	Ch -R2500000
	-98		R		**CF074**		Ø 19,05	Ch R2500001-
	-98		R		**CF185**		Ø 19,05	Ch R2500001-, Alu
	91-98				**PF214**	Ate	Ø 22,20	+ABS
	91-98				**PF219**	Ate	Ø 22,20	-ABS
	91-98				**PF038**	Del(EB)	Ø 20,64	Alu, -ABS
	91-98				**PF198**	Del(EJ)	Ø 22,20	Alu, +ABS
	91-98				**PF199**	Del(EK)	Ø 22,20	Alu, -ABS
1.4 i 16v, Cabrio Eng.X14XE (66kW)	96-98		R		**CF185**		Ø 19,05	Alu
	96-98				**PF214**	Ate	Ø 22,20	+ABS
	96-98				**PF038**	Del(EB)	Ø 20,64	Alu, -ABS
1.4 S Eng.14NV (53-55kW)			R		**CF009**		Ø 17,46	Ch -R2500000
	-93		R		**CF074**		Ø 19,05	Ch R2500001-
	-93		R		**CF185**		Ø 19,05	Ch R2500001-, Alu
	91-93				**PF214**	Ate	Ø 22,20	+ABS
	91-93				**PF219**	Ate	Ø 22,20	-ABS
	91-93				**PF038**	Del(EB)	Ø 20,64	Alu, -ABS
	91-93				**PF198**	Del(EJ)	Ø 22,20	Alu, +ABS
	91-93				**PF199**	Del(EK)	Ø 22,20	Alu, -ABS
1.4 Si, Cabrio Eng.C14SE (60kW)			R		**CF009**		Ø 17,46	Ch -R2500000
	-98		R		**CF074**		Ø 19,05	Ch R2500001-
	-98		R		**CF185**		Ø 19,05	Ch R2500001-, Alu
	92-98				**PF214**	Ate	Ø 22,20	+ABS
	92-98				**PF219**	Ate	Ø 22,20	-ABS
	92-98				**PF038**	Del(EB)	Ø 20,64	Alu, -ABS
	92-98				**PF198**	Del(EJ)	Ø 22,20	Alu, +ABS
	92-98				**PF199**	Del(EK)	Ø 22,20	Alu, -ABS
1.6 Eng.16NZR (55kW)	95-		R		**CF009**		Ø 17,46	Ch -R2500000
	-98		R		**CF074**		Ø 19,05	Ch R2500001-
	-98		R		**CF185**		Ø 19,05	Ch R2500001-, Alu
	95-98				**PF214**	Ate	Ø 22,20	+ABS
	95-98				**PF038**	Del(EB)	Ø 20,64	Alu, -ABS
	95-98				**PF198**	Del(EJ)	Ø 22,20	Alu, +ABS
1.6 i Eng.16LZ2 (55kW)	95-		R		**CF009**		Ø 17,46	Ch -R2500000
	-98		R		**CF074**		Ø 19,05	Ch R2500001-
	-98		R		**CF185**		Ø 19,05	Ch R2500001-, Alu
	95-98				**PF214**	Ate	Ø 22,20	+ABS
	95-98				**PF038**	Del(EB)	Ø 20,64	Alu, -ABS
	95-98				**PF198**	Del(EJ)	Ø 22,20	Alu, +ABS
1.6 i Eng.C16NZ/ E16NZ (55kW)	92-		R		**CF009**		Ø 17,46	Ch -R2500000
	-94		R		**CF074**		Ø 19,05	Ch R2500001-
	-94		R		**CF185**		Ø 19,05	Ch R2500001-, Alu
	92-94				**PF214**	Ate	Ø 22,20	+ABS
	92-94				**PF038**	Del(EB)	Ø 20,64	Alu, -ABS
	92-94				**PF198**	Del(EJ)	Ø 22,20	Alu, +ABS

		Spare Parts	F/R	L/R	FRITECH ref.		DIMENSIONS mm.	NOTE
1.6 i 16v Eng.X16XEL (74kW)			R		**CF009**		Ø 17,46	Ch -R2500000
	-98		R		**CF074**		Ø 19,05	Ch R2500001-
	-98		R		**CF185**		Ø 19,05	Ch R2500001-, Alu
	94-98				**PF214**	Ate	Ø 22,20	+ABS
	94-98				**PF219**	Ate	Ø 22,20	-ABS
	94-98				**PF038**	Del(EB)	Ø 20,64	Alu, -ABS
	94-98				**PF198**	Del(EJ)	Ø 22,20	Alu, +ABS
	94-98				**PF199**	Del(EK)	Ø 22,20	Alu, -ABS
1.6 i, Cabrio Eng.X16SZ (52kW)			R		**CF009**		Ø 17,46	Ch -R2500000
	-96		R		**CF074**		Ø 19,05	Ch R2500001-
	-96		R		**CF185**		Ø 19,05	Ch R2500001-, Alu
	93-96				**PF214**	Ate	Ø 22,20	+ABS
	93-96				**PF038**	Del(EB)	Ø 20,64	Alu, -ABS
	93-96				**PF198**	Del(EJ)	Ø 22,20	Alu, +ABS
1.6 i, Cabrio Eng.X16SZR (55kW)	96-98		R		**CF185**		Ø 19,05	Alu
	96-98				**PF214**	Ate	Ø 22,20	+ABS
	96-98				**PF038**	Del(EB)	Ø 20,64	Alu, -ABS
	96-98				**PF198**	Del(EJ)	Ø 22,20	Alu, +ABS
1.6 Si Eng.C16SE (74kW)			R		**CF009**		Ø 17,46	Ch -R2500000
	-94		R		**CF074**		Ø 19,05	Ch R2500001-
	-94		R		**CF185**		Ø 19,05	Ch R2500001-, Alu
	92-94				**PF214**	Ate	Ø 22,20	+ABS
	92-94				**PF038**	Del(EB)	Ø 20,64	Alu, -ABS
	92-94				**PF198**	Del(EJ)	Ø 22,20	Alu, +ABS
1.7 D Eng.17D (42kW)			R		**CF009**		Ø 17,46	Ch -R2500000
			R		**CF185**		Ø 19,05	Ch R2500001-, Alu
	3/92-9/92				**PF214**	Ate	Ø 22,20	+ABS
	3/92-9/92				**PF219**	Ate	Ø 22,20	-ABS
	3/92-9/92				**PF038**	Del(EB)	Ø 20,64	Alu, -ABS
	3/92-9/92				**PF198**	Del(EJ)	Ø 22,20	Alu, +ABS
	3/92-9/92				**PF199**	Del(EK)	Ø 22,20	Alu, -ABS
1.7 D Eng.17D/ DR (44kW)			R		**CF009**		Ø 17,46	Ch -R2500000
	-98		R		**CF074**		Ø 19,05	Ch R2500001-
	-98		R		**CF185**		Ø 19,05	Ch R2500001-, Alu
	92-98				**PF214**	Ate	Ø 22,20	+ABS
	92-98				**PF219**	Ate	Ø 22,20	-ABS
	92-98				**PF038**	Del(EB)	Ø 20,64	Alu, -ABS
	92-98				**PF198**	Del(EJ)	Ø 22,20	Alu, +ABS
	92-98				**PF199**	Del(EK)	Ø 22,20	Alu, -ABS
1.7 TD Eng.X17DTL (50kW)			R		**CF009**		Ø 17,46	Ch -R2500000
	-98		R		**CF074**		Ø 19,05	Ch R2500001-
	-98		R		**CF185**		Ø 19,05	Ch R2500001-, Alu
	94-98				**PF214**	Ate	Ø 22,20	+ABS
	94-98				**PF038**	Del(EB)	Ø 20,64	Alu, -ABS
	94-98				**PF198**	Del(EJ)	Ø 22,20	Alu, +ABS
1.7 TDS Eng.17DT(TC4EE1)/ X17DT (60kW)			R		**CF009**		Ø 17,46	Ch -R2500000
	-98		R		**CF074**		Ø 19,05	Ch R2500001-
	-98		R		**CF185**		Ø 19,05	Ch R2500001-, Alu
	92-98				**PF214**	Ate	Ø 22,20	+ABS
	92-98				**PF219**	Ate	Ø 22,20	-ABS
	92-98				**PF038**	Del(EB)	Ø 20,64	Alu, -ABS
	92-98				**PF198**	Del(EJ)	Ø 22,20	Alu, +ABS
	92-98				**PF199**	Del(EK)	Ø 22,20	Alu, -ABS
1.8 i Eng.C18NZ (66kW)	92-		R		**CF009**		Ø 17,46	Ch -NE183174
	-98		R		**CF074**		Ø 19,05	Ch R2500001-
	-98		R		**CF185**		Ø 19,05	Ch R2500001-, Alu
	92-98				**PF214**	Ate	Ø 22,20	+ABS
	92-98				**PF219**	Ate	Ø 22,20	-ABS
	-98				**PF038**	Del(EB)	Ø 20,64	Ch NE183175-, Alu, -ABS
	92-98				**PF198**	Del(EJ)	Ø 22,20	Alu, +ABS
	92-98				**PF199**	Del(EK)	Ø 22,20	Alu, -ABS
1.8 i 16v, Cabrio Eng.C18XE (92kW)	93-94				**PF214**	Ate	Ø 22,20	+ABS
	93-94				**PF219**	Ate	Ø 22,20	-ABS, HDB
	93-94				**PF198**	Del(EJ)	Ø 22,20	Alu, +ABS

OPEL

		Spare Parts	F/R	L/R	FRITECH ref.		DIMENSIONS mm.	NOTE
1.8 i 16v, Cabrio Eng.C18XE (92kW)	93-94				**PF199**	Del(EK)	Ø 22,20	Alu, -ABS
1.8 i 16v, Cabrio Eng.C18XEL/ X18XE (85kW)	94-98		R		**CF074**		Ø 19,05	
	94-98		R		**CF185**		Ø 19,05	Alu
	94-98				**PF214**	Ate	Ø 22,20	+ABS
	94-98				**PF219**	Ate	Ø 22,20	-ABS, HDB
	94-98				**PF198**	Del(EJ)	Ø 22,20	Alu, +ABS
	94-98				**PF199**	Del(EK)	Ø 22,20	Alu, -ABS
1.8. Cabrio Eng.18SE (85kW)	91-93		R		**CF074**		Ø 19,05	
	91-93		R		**CF185**		Ø 19,05	Alu
2.0 16v SW Eng.C20XE (110kW)	92-98				**PF214**	Ate	Ø 22,20	+ABS
	92-98				**PF219**	Ate	Ø 22,20	-ABS
	92-98				**PF198**	Del(EJ)	Ø 22,20	Alu, +ABS
	92-98				**PF199**	Del(EK)	Ø 22,20	Alu, -ABS
2.0 i 16v Eng.X20XEV (100kW)	95-98				**PF214**	Ate	Ø 22,20	+ABS
	95-98				**PF219**	Ate	Ø 22,20	-ABS
	95-98				**PF198**	Del(EJ)	Ø 22,20	Alu, +ABS
	95-98				**PF199**	Del(EK)	Ø 22,20	Alu, -ABS
2.0 i, Cabrio Eng.C20NE (85kW)	92-		R		**CF009**		Ø 17,46	Ch -NE183174
	-98		R		**CF074**		Ø 19,05	Ch NE183175-
	-98		R		**CF185**		Ø 19,05	Ch NE183175-, Alu
	92-98				**PF214**	Ate	Ø 22,20	+ABS
	92-98				**PF219**	Ate	Ø 22,20	-ABS
	92-98				**PF198**	Del(EJ)	Ø 22,20	Alu, +ABS
	92-98				**PF199**	Del(EK)	Ø 22,20	Alu, -ABS
Astra G, SW 9/98-3/04								
1.2 16v Eng.Z12XE (55kW)	00-04		R		**CF185**		Ø 19,05	Alu
	00-04				**PF557**	Luc	Ø 23,81	Alu, +ESP
	00-04				**PF280**	Luc	Ø 23,81	Alu, -ESP
	00-04				**PZ078**	Fte	Ø 15,87	Pla
	00-04				**PZ103**	Fte	Ø 15,87	
1.2 i 16v Eng.X12XE (48kW)	98-00		R		**CF185**		Ø 19,05	Alu
	98-00				**PF557**	Luc	Ø 23,81	Alu, +ESP
	98-00				**PF280**	Luc	Ø 23,81	Alu, -ESP
	98-00				**PZ078**	Fte	Ø 15,87	Pla
	98-00				**PZ103**	Fte	Ø 15,87	
1.4 Eng.Z14XEP (66kW)	03-04				**PZ078**	Fte	Ø 15,87	Pla
	03-04				**PZ103**	Fte	Ø 15,87	
1.4 i 16v Eng.X14XE/ Z14XE (66kW)	98-04		R		**CF185**		Ø 19,05	Alu
	98-04				**PF557**	Luc	Ø 23,81	Alu, +ESP
	98-04				**PF280**	Luc	Ø 23,81	Alu, -ESP
	98-04				**PZ078**	Fte	Ø 15,87	Pla
	98-04				**PZ103**	Fte	Ø 15,87	
1.6 Eng.Z16SE (62kW)	00-04		R		**CF185**		Ø 19,05	Alu
	00-04				**PF557**	Luc	Ø 23,81	Alu, +ESP
	00-04				**PF280**	Luc	Ø 23,81	Alu, -ESP
	00-04				**PZ078**	Fte	Ø 15,87	Pla
	00-04				**PZ103**	Fte	Ø 15,87	
1.6 16v, Cabrio Eng.X16XEL/ Z16XE (74kW)	98-04		R		**CF185**		Ø 19,05	Alu
	98-04				**PF557**	Luc	Ø 23,81	Alu, +ESP
	98-04				**PF280**	Luc	Ø 23,81	Alu, -ESP
	98-04				**PZ078**	Fte	Ø 15,87	Pla
	98-04				**PZ103**	Fte	Ø 15,87	
1.6 16v, Cabrio, Coupe Eng.Z16XEP (76kW)	00-04		R		**CF185**		Ø 19,05	Alu, -ABS
	00-04				**PF557**	Luc	Ø 23,81	Alu, +ESP
	00-04				**PF280**	Luc	Ø 23,81	Alu, -ESP
	00-				**PZ078**	Fte	Ø 15,87	Pla
	00-				**PZ103**	Fte	Ø 15,87	
1.6 CNG SW Eng.Z16YNG (71kW)	03-04		R		**CF185**		Ø 19,05	Alu, -ABS
	03-04				**PF557**	Luc	Ø 23,81	Alu, +ESP
	03-04				**PF280**	Luc	Ø 23,81	Alu, -ESP
1.6 i 16v Eng.X16SZR (55kW)	98-00		R		**CF185**		Ø 19,05	Alu
	98-00				**PF557**	Luc	Ø 23,81	Alu, +ESP
	98-00				**PF280**	Luc	Ø 23,81	Alu, -ESP
	98-00				**PZ078**	Fte	Ø 15,87	Pla

		Spare Parts	F/R	L/R	FRITECH ref.		DIMENSIONS mm.	NOTE
1.6 i 16v Eng.X16SZR (55kW)	98-00				**PZ103**	Fte	Ø 15,87	
1.7 CDTi Eng.Z17DTL (59kW)	03-04		R		**CF185**		Ø 19,05	Alu
	03-04				**PF557**	Luc	Ø 23,81	Alu, +ESP
	03-04				**PF280**	Luc	Ø 23,81	Alu, -ESP
	03-04				**PZ078**	Fte	Ø 15,87	Pla
	03-04				**PZ103**	Fte	Ø 15,87	
1.7 DTI 16v Eng.Y17DT (48-55kW)	00-04		R		**CF185**		Ø 19,05	Alu
	00-04				**PF557**	Luc	Ø 23,81	Alu, +ESP
	00-04				**PF280**	Luc	Ø 23,81	Alu, -ESP
	00-04				**PZ078**	Fte	Ø 15,87	Pla
	00-04				**PZ103**	Fte	Ø 15,87	
1.7 TD Eng.X17DTL (50kW)	98-00		R		**CF185**		Ø 19,05	Alu
	98-00				**PF557**	Luc	Ø 23,81	Alu, +ESP
	98-00				**PF280**	Luc	Ø 23,81	Alu, -ESP
	98-00				**PZ078**	Fte	Ø 15,87	Pla
	98-00				**PZ103**	Fte	Ø 15,87	
1.8 16v, Cabrio, Coupe Eng.Z18XE (87-92kW)	00-04				**PF557**	Luc	Ø 23,81	Alu, +ESP
	00-04				**PF280**	Luc	Ø 23,81	Alu, -ESP
	00-				**PZ078**	Fte	Ø 15,87	Pla
	00-				**PZ103**	Fte	Ø 15,87	
1.8 16v, Coupe Eng.X18XE1 (85kW)	98-00				**PF557**	Luc	Ø 23,81	Alu, +ESP
	98-00				**PF280**	Luc	Ø 23,81	Alu, -ESP
	98-				**PZ078**	Fte	Ø 15,87	Pla
	98-				**PZ103**	Fte	Ø 15,87	
2.0 16v T. OPC Coupe,Cabrio,SW Eng.Z20LET	00-				**PF557**	Luc	Ø 23,81	Alu, +ESP
(141kW)	00-04				**PF280**	Luc	Ø 23,81	Alu, -ESP
	00-				**PZ078**	Fte	Ø 15,87	Pla
	00-				**PZ103**	Fte	Ø 15,87	
2.0 Di 16v Eng.X20DTL/ Y20DTL (60kW)	98-04				**PF557**	Luc	Ø 23,81	Alu, +ESP
	3/98-				**PF280**	Luc	Ø 23,81	Alu, -ESP
	98-				**PZ078**	Fte	Ø 15,87	Pla
	98-				**PZ103**	Fte	Ø 15,87	
2.0 DTI 16v Eng.X20DTH/ Y20DTH (74kW)	99-04				**PF557**	Luc	Ø 23,81	Alu, +ESP
	99-04				**PF280**	Luc	Ø 23,81	Alu, -ESP
	99-04				**PZ078**	Fte	Ø 15,87	Pla
	99-04				**PZ103**	Fte	Ø 15,87	
2.0 i 16v Eng.X20XEV (100kW)	98-04				**PF557**	Luc	Ø 23,81	Alu, +ESP
	98-04				**PF280**	Luc	Ø 23,81	Alu, -ESP
	98-04				**PZ078**	Fte	Ø 15,87	Pla
	98-04				**PZ103**	Fte	Ø 15,87	
2.0 T. 16v Coupe,Cabrio,SW Eng.Z20LER (147kW)	02-				**PF557**	Luc	Ø 23,81	Alu, +ESP
	02-04				**PF280**	Luc	Ø 23,81	Alu, -ESP
	02-				**PZ078**	Fte	Ø 15,87	Pla
	02-				**PZ103**	Fte	Ø 15,87	
2.2 16v, Cabrio, Coupe Eng.Z22SE (108kW)	3/01-				**PF557**	Luc	Ø 23,81	Alu, +ESP
	01-04				**PF280**	Luc	Ø 23,81	Alu, -ESP
	01-				**PZ078**	Fte	Ø 15,87	Pla
	01-				**PZ103**	Fte	Ø 15,87	
2.2 DTI, Cabrio, Coupe Eng.Y22DTR (92kW)	02-04				**PF557**	Luc	Ø 23,81	Alu, +ESP
	02-04				**PF280**	Luc	Ø 23,81	Alu, -ESP
	02-04				**PZ078**	Fte	Ø 15,87	Pla
	02-04				**PZ103**	Fte	Ø 15,87	
Astra H Cabriolet 9/05-11/09								
1.6 Eng.Z16XER (85kW)	06-09		R		**CF780**	Loc	Ø 19,05	Ch 82-, Alu
	06-09		R		**CF320**		Ø 20,64	Ch -82, Alu
	06-09				**PF865**	Trw	Ø 25,40	Alu, +ESP
	06-09				**PF866**	Trw	Ø 25,40	Alu, -ESP
1.6 16v Eng.Z16XEP (77kW)	05-09		R		**CF780**	Loc	Ø 19,05	Ch 82-, Alu
	05-09		R		**CF320**		Ø 20,64	Ch -82, Alu
	05-06				**PF657**	Trw	Ø 25,40	Alu, +ESP
	06-				**PF865**	Trw	Ø 25,40	Alu, +ESP
	05-06				**PF656**	Trw	Ø 25,40	Alu, -ESP
	06-				**PF866**	Trw	Ø 25,40	Alu, -ESP
	05-				**PZ078**	Fte	Ø 15,87	Pla, M/T, LHD

OPEL

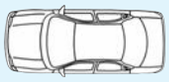		Spare Parts	F/R	L/R	FRITECH ref.		DIMENSIONS mm.	NOTE
1.6 16v Eng.Z16XEP (77kW)	05-				**PZ103**	Fte	Ø 15,87	M/T, LHD
1.7 CDTi Eng.A17DTR/ Z17DTR (92kW)	07-09				**PF865**	Trw	Ø 25,40	Alu, +ESP
	07-09				**PF866**	Trw	Ø 25,40	Alu, -ESP
	07-				**PZ078**	Fte	Ø 15,87	Pla, LHD
	07-				**PZ103**	Fte	Ø 15,87	LHD
1.8 Eng.Z18XER (101kW)	08-09				**PF865**	Trw	Ø 25,40	Alu, +ESP
	08-09				**PF866**	Trw	Ø 25,40	Alu, -ESP
	08-09				**PZ078**	Fte	Ø 15,87	Pla, LHD
	08-09				**PZ103**	Fte	Ø 15,87	LHD
1.8 16v Eng.Z18XE (92kW)	05-09		R		**CF780**	Loc	Ø 19,05	Ch 82-, Alu
	05-09		R		**CF320**		Ø 20,64	Ch -82, Alu
	05-06				**PF657**	Trw	Ø 25,40	Alu, +ESP
	06-				**PF865**	Trw	Ø 25,40	Alu, +ESP
	05-06				**PF656**	Trw	Ø 25,40	Alu, -ESP
	06-				**PF866**	Trw	Ø 25,40	Alu, -ESP
	05-				**PZ078**	Fte	Ø 15,87	Pla, LHD
	05-				**PZ103**	Fte	Ø 15,87	LHD
1.8 16v Eng.Z18XER (103kW)	05-06				**PF657**	Trw	Ø 25,40	Alu, +ESP
	06-				**PF865**	Trw	Ø 25,40	Alu, +ESP
	05-06				**PF656**	Trw	Ø 25,40	Alu, -ESP
	06-				**PF866**	Trw	Ø 25,40	Alu, -ESP
	05-				**PZ078**	Fte	Ø 15,87	Pla, LHD
	05-				**PZ103**	Fte	Ø 15,87	LHD
1.9 CDTi Eng.Z19DTH (110kW)	05-09		R		**CF780**	Loc	Ø 19,05	Ch 82-, Alu
	05-09		R		**CF320**		Ø 20,64	Ch -82, Alu
	05-				**PZ078**	Fte	Ø 15,87	Pla, LHD
	05-				**PZ103**	Fte	Ø 15,87	LHD
2.0 T. Eng.Z20LEL (125kW)	05-06				**PF657**	Trw	Ø 25,40	Alu, +ESP
	06-				**PF865**	Trw	Ø 25,40	Alu, +ESP
	05-06				**PF656**	Trw	Ø 25,40	Alu, -ESP
	06-				**PF866**	Trw	Ø 25,40	Alu, -ESP
	05-				**PZ078**	Fte	Ø 15,87	Pla, LHD
	05-				**PZ103**	Fte	Ø 15,87	LHD
2.0 T. 16v Eng.Z20LER (147kW)	05-06				**PF657**	Trw	Ø 25,40	Alu, +ESP
	06-				**PF865**	Trw	Ø 25,40	Alu, +ESP
	05-06				**PF656**	Trw	Ø 25,40	Alu, -ESP
	06-				**PF866**	Trw	Ø 25,40	Alu, -ESP
	05-				**PZ078**	Fte	Ø 15,87	Pla, LHD
	05-				**PZ103**	Fte	Ø 15,87	LHD
Astra H, SW, GTC 3/04-11/09								
1.2 Eng.X12XE (48kW)	06-				**PZ078**	Fte	Ø 15,87	Pla
	06-				**PZ103**	Fte	Ø 15,87	
1.2 Eng.Z12XEP (59kW)	05-09		R		**CF780**	Loc	Ø 19,05	Ch 82-, Alu
	05-09		R		**CF320**		Ø 20,64	Ch -82, Alu
1.3 CDTi 16v Eng.Z13DTH (66kW)	05-09		R		**CF780**	Loc	Ø 19,05	Ch 82-, Alu
	05-09		R		**CF320**		Ø 20,64	Ch -82, Alu
	05-06				**PF657**	Trw	Ø 25,40	Alu, +ESP
	06-				**PF865**	Trw	Ø 25,40	Alu, +ESP
	05-06				**PF656**	Trw	Ø 25,40	Alu, -ESP
	06-				**PF866**	Trw	Ø 25,40	Alu, -ESP
1.4 Eng.Z14XEL (55kW)	04-09		R		**CF780**	Loc	Ø 19,05	Ch 82-, Alu
	04-09		R		**CF320**		Ø 20,64	Ch -82, Alu
	04-06				**PF657**	Trw	Ø 25,40	Alu, +ESP
	06-				**PF865**	Trw	Ø 25,40	Alu, +ESP
	04-06				**PF656**	Trw	Ø 25,40	Alu, -ESP
	06-				**PF866**	Trw	Ø 25,40	Alu, -ESP
	3/04-				**PZ078**	Fte	Ø 15,87	Pla
	3/04-				**PZ103**	Fte	Ø 15,87	
1.4 16v Eng.Z14XEP (66kW)	04-09		R		**CF780**	Loc	Ø 19,05	Ch 82-, Alu
	04-09		R		**CF320**		Ø 20,64	Ch -82, Alu
	04-06				**PF657**	Trw	Ø 25,40	Alu, +ESP
	06-				**PF865**	Trw	Ø 25,40	Alu, +ESP
	04-06				**PF656**	Trw	Ø 25,40	Alu, -ESP
	06-				**PF866**	Trw	Ø 25,40	Alu, -ESP

		Spare Parts	F/R	L/R	FRITECH ref.		DIMENSIONS mm.	NOTE
1.4 16v Eng.Z14XEP (66kW)	04-				**PZ078**	Fte	Ø 15,87	Pla
	04-				**PZ103**	Fte	Ø 15,87	
1.6 16v Eng.Z16XEP (77kW)	04-09		R		**CF780**	Loc	Ø 19,05	Ch 82-, Alu
	04-09		R		**CF320**		Ø 20,64	Ch -82, Alu
	04-06				**PF657**	Trw	Ø 25,40	Alu, +ESP
	06-				**PF865**	Trw	Ø 25,40	Alu, +ESP
	04-06				**PF656**	Trw	Ø 25,40	Alu, -ESP
	06-				**PF866**	Trw	Ø 25,40	Alu, -ESP
	3/04-				**PZ078**	Fte	Ø 15,87	Pla, M/T
	3/04-				**PZ103**	Fte	Ø 15,87	M/T
1.6 16v Eng.Z16XER (85kW)	07-09		R		**CF780**	Loc	Ø 19,05	Ch 82-, Alu
	07-09		R		**CF320**		Ø 20,64	Ch -82, Alu
	06-				**PF865**	Trw	Ø 25,40	Alu, +ESP
	06-				**PF866**	Trw	Ø 25,40	Alu, -ESP
	06-				**PZ078**	Fte	Ø 15,87	Pla, M/T, LHD
	06-				**PZ103**	Fte	Ø 15,87	M/T, LHD
1.6 T. 16v Eng.Z16LET (132kW)	07-09		R		**CF780**	Loc	Ø 19,05	Ch 82-, Alu
	07-09				**PF865**	Trw	Ø 25,40	Alu, +ESP
	07-09				**PF866**	Trw	Ø 25,40	Alu, -ESP
	07-				**PZ078**	Fte	Ø 15,87	Pla, LHD
	07-				**PZ103**	Fte	Ø 15,87	LHD
1.7 CDTi Eng.Z17DTH (74kW)	04-09		R		**CF780**	Loc	Ø 19,05	Ch 82-, Alu
	04-09		R		**CF320**		Ø 20,64	Ch -82, Alu
	04-06				**PF657**	Trw	Ø 25,40	Alu, +ESP
	06-				**PF865**	Trw	Ø 25,40	Alu, +ESP
	04-06				**PF656**	Trw	Ø 25,40	Alu, -ESP
	06-				**PF866**	Trw	Ø 25,40	Alu, -ESP
	04-09				**PZ078**	Fte	Ø 15,87	Pla
	04-09				**PZ103**	Fte	Ø 15,87	
1.7 CDTI Eng.Z17DTJ/ DTR (81kW)	08-09		R		**CF780**	Loc	Ø 19,05	Ch 82-, Alu
	08-09		R		**CF320**		Ø 20,64	Ch -82, Alu
	07-09				**PF865**	Trw	Ø 25,40	Alu, +ESP
	07-09				**PF866**	Trw	Ø 25,40	Alu, -ESP
	08-				**PZ078**	Fte	Ø 15,87	Pla, LHD
	08-				**PZ103**	Fte	Ø 15,87	LHD
1.7 CDTi (Exc. GTC) Eng.Z17DTL (59kW)	04-09		R		**CF780**	Loc	Ø 19,05	Ch 82-, Alu
	04-09		R		**CF320**		Ø 20,64	Ch -82, Alu
	04-06				**PF657**	Trw	Ø 25,40	Alu, +ESP
	06-				**PF865**	Trw	Ø 25,40	Alu, +ESP
	04-06				**PF656**	Trw	Ø 25,40	Alu, -ESP
	06-				**PF866**	Trw	Ø 25,40	Alu, -ESP
	8/04-				**PZ078**	Fte	Ø 15,87	Pla
	8/04-				**PZ103**	Fte	Ø 15,87	
1.7 CDTi 16v Eng.A17DTR/ Z17DTR (92kW)	07-09		R		**CF780**	Loc	Ø 19,05	Ch 82-, Alu
	07-09		R		**CF320**		Ø 20,64	Ch -82, Alu
	07-09				**PF865**	Trw	Ø 25,40	Alu, +ESP
	07-09				**PF866**	Trw	Ø 25,40	Alu, -ESP
	07-				**PZ078**	Fte	Ø 15,87	Pla, LHD
	07-				**PZ103**	Fte	Ø 15,87	LHD
1.8 Eng.Z18XER (101kW)	08-				**PF865**	Trw	Ø 25,40	Alu, +ESP
	08-				**PF866**	Trw	Ø 25,40	Alu, -ESP
	08-				**PZ078**	Fte	Ø 15,87	Pla, LHD
	08-				**PZ103**	Fte	Ø 15,87	LHD
1.8 16v Eng.Z18XE (92kW)	04-09		R		**CF780**	Loc	Ø 19,05	Ch 82-, Alu
	04-09		R		**CF320**		Ø 20,64	Ch -82, Alu
	04-06				**PF657**	Trw	Ø 25,40	Alu, +ESP
	06-				**PF865**	Trw	Ø 25,40	Alu, +ESP
	04-06				**PF656**	Trw	Ø 25,40	Alu, -ESP
	06-				**PF866**	Trw	Ø 25,40	Alu, -ESP
	3/04-				**PZ078**	Fte	Ø 15,87	Pla
	3/04-				**PZ103**	Fte	Ø 15,87	
1.8 16v Eng.Z18XER (103kW)	07-09		R		**CF780**	Loc	Ø 19,05	Ch 82-, Alu
	07-09		R		**CF320**		Ø 20,64	Ch -82, Alu
	07-				**PF865**	Trw	Ø 25,40	Alu, +ESP

OPEL

		Spare Parts	F/R	L/R	FRITECH ref.		DIMENSIONS mm.	NOTE
1.8 16v Eng.Z18XER (103kW)	07-				**PF866**	Trw	Ø 25,40	Alu, -ESP
	07-				**PZ078**	Fte	Ø 15,87	Pla, LHD
	07-				**PZ103**	Fte	Ø 15,87	LHD
1.9 CDTI Eng.Z19DT (88kW)	04-09		R		**CF780**	Loc	Ø 19,05	Ch 82-, Alu
	04-09		R		**CF320**		Ø 20,64	Ch -82, Alu
1.9 CDTi Eng.Z19DTH (110kW)	04-09		R		**CF780**	Loc	Ø 19,05	Ch 82-, Alu
	04-09		R		**CF320**		Ø 20,64	Ch -82, Alu
	9/04-				**PZ078**	Fte	Ø 15,87	Pla
	9/04-				**PZ103**	Fte	Ø 15,87	
1.9 CDTi Eng.Z19DTJ (103kW)	3/04-				**PZ078**	Fte	Ø 15,87	Pla
	3/04-				**PZ103**	Fte	Ø 15,87	
1.9 CDTi Eng.Z19DTL (74kW)	05-09		R		**CF780**	Loc	Ø 19,05	Ch 82-, Alu
	05-09		R		**CF320**		Ø 20,64	Ch -82, Alu
	05-				**PZ078**	Fte	Ø 15,87	Pla, LHD
	05-				**PZ103**	Fte	Ø 15,87	LHD
2.0 OPC Eng.Z20LEH (177kW)	05-06				**PF657**	Trw	Ø 25,40	Alu, +ESP
	06-				**PF865**	Trw	Ø 25,40	Alu, +ESP
	05-06				**PF656**	Trw	Ø 25,40	Alu, -ESP
	06-				**PF866**	Trw	Ø 25,40	Alu, -ESP
	05-				**PZ078**	Fte	Ø 15,87	Pla, LHD
	05-				**PZ103**	Fte	Ø 15,87	LHD
2.0 Racing Ed. Eng.Z20LEH (174kW)	09-				**PF865**	Trw	Ø 25,40	Alu, +ESP
	09-				**PF866**	Trw	Ø 25,40	Alu, -ESP
	09-				**PZ078**	Fte	Ø 15,87	Pla, LHD
	09-				**PZ103**	Fte	Ø 15,87	LHD
2.0 T. Eng.Z20LEL (125kW)	04-06				**PF657**	Trw	Ø 25,40	Alu, +ESP
	06-				**PF865**	Trw	Ø 25,40	Alu, +ESP
	04-06				**PF656**	Trw	Ø 25,40	Alu, -ESP
	06-				**PF866**	Trw	Ø 25,40	Alu, -ESP
	3/04-				**PZ078**	Fte	Ø 15,87	Pla
	3/04-				**PZ103**	Fte	Ø 15,87	
2.0 T. 16v Eng.Z20LER (147kW)	04-06				**PF657**	Trw	Ø 25,40	Alu, +ESP
	06-				**PF865**	Trw	Ø 25,40	Alu, +ESP
	04-06				**PF656**	Trw	Ø 25,40	Alu, -ESP
	06-				**PF866**	Trw	Ø 25,40	Alu, -ESP
	9/04-				**PZ078**	Fte	Ø 15,87	Pla
	9/04-				**PZ103**	Fte	Ø 15,87	
Astra J, SW, GTC 12/09-8/15								
1.3 CDTi Eng.A13DTE (70kW)	09-				**PF941**	Ate	Ø 25,40	Alu
1.4 Eng.A14XEL (64kW)	09-				**PF941**	Ate	Ø 25,40	Alu
1.4 Eng.A14XER (74kW)	09-				**PF941**	Ate	Ø 25,40	Alu
1.4 GPL Eng.A14NET (103kW)	12-				**PF941**	Ate	Ø 25,40	Alu
1.4 T Eng.A14NEL (88kW)	10-				**PF941**	Ate	Ø 25,40	Alu
1.4 T. Eng.A14NET (103kW)	09-				**PF941**	Ate	Ø 25,40	Alu
1.6 SIDI Eng.A16XHT (125kW)	12-				**PF941**	Ate	Ø 25,40	Alu
1.6 T. Eng.A16LET (132kW)	09-				**PF941**	Ate	Ø 25,40	Alu
1.6, Coupe, Cabrio Eng.A16XER (85kW)	09-				**PF941**	Ate	Ø 25,40	Alu
1.7 CDTi Eng.A17DTJ/ DTE/ DTC (81kW)	09-				**PF941**	Ate	Ø 25,40	Alu
1.7 CDTi Eng.A17DTR (92kW)	09-				**PF941**	Ate	Ø 25,40	Alu
1.7 CDTi Eng.A17DTS/ DTF (96kW)	11-				**PF941**	Ate	Ø 25,40	Alu
1.7 CDTi Eng.Z17DTH/ A17DTL (74kW)	09-				**PF941**	Ate	Ø 25,40	Alu
1.8 16v Coupe, Cabrio Eng.A18XER (103kW)	10-				**PF941**	Ate	Ø 25,40	Alu
1.9 CDTI 16v Coupe, Cabrio Eng.Z19DTH (110kW)	09-				**PF941**	Ate	Ø 25,40	Alu
2.0 CDTi Eng.A20DTH (118kW)	09-				**PF941**	Ate	Ø 25,40	Alu
2.0 CDTi Eng.A20DTH (121kW)	11-				**PF941**	Ate	Ø 25,40	Alu
2.0 CDTi Eng.A20DTR (143kW)	12-				**PF941**	Ate	Ø 25,40	Alu
Calibra A 6/90-7/97								
2.0 16v, 4WD Eng.C20XE (110-115kW)	90-94				**PF214**	Ate	Ø 22,20	+ABS
	90-94				**PF168**	Del(CT,CJ)	Ø 22,22	Alu, -ABS
	90-94				**PF198**	Del(EJ)	Ø 22,20	Alu, +ABS
	90-94				**PF199**	Del(EK)	Ø 22,20	Alu, -ABS, HDB
2.0 i Eng.C20NE (85kW)	90-97				**PF214**	Ate	Ø 22,20	+ABS
	90-97				**PF168**	Del(CT,CJ)	Ø 22,22	Alu, -ABS
	90-97				**PF198**	Del(EJ)	Ø 22,20	Alu, +ABS

		Spare Parts	F/R	L/R	FRITECH ref.		DIMENSIONS mm.	NOTE
2.0 i Eng.C20NE (85kW)	90-97				**PF199**	Del(EK)	Ø 22,20	Alu, -ABS, HDB
2.0 i 16v, 4WD Eng.X20XEV (100kW)	94-97				**PF214**	Ate	Ø 22,20	+ABS
	94-97				**PF198**	Del(EJ)	Ø 22,20	Alu, +ABS
2.0 i 4WD Eng.C20NE (85kW)	90-97				**PF214**	Ate	Ø 22,20	+ABS
	90-97				**PF168**	Del(CT,CJ)	Ø 22,22	Alu, -ABS
	90-97				**PF198**	Del(EJ)	Ø 22,20	Alu, +ABS
	90-97				**PF199**	Del(EK)	Ø 22,20	Alu, -ABS, HDB
Cascada (W13) 5/13-								
1.4 Eng.A14NEL (88kW)	13-				**PF941**	Ate	Ø 25,40	Alu
1.4 T Eng.A14NET (103kW)	13-				**PF941**	Ate	Ø 25,40	Alu
1.6 Eng.A16SHT (147kW)	13-				**PF941**	Ate	Ø 25,40	Alu
1.6 T SIDI Eng.A16XHT (125kW)	13-				**PF941**	Ate	Ø 25,40	Alu
2.0 CDTI Eng.A20DTH (121kW)	13-				**PF941**	Ate	Ø 25,40	Alu
2.0 CDTi Biturbo Eng.A20DTR (143kW)	13-				**PF941**	Ate	Ø 25,40	Alu
Chevanne 1/76-1/82								
1.3 (40kW)	76-82		R		**CF360**		Ø 19,05	
Combo Tour II 1/01-12/11								
1.3 CDTI 16V Eng.Y13DT / Z13DT (51kW)	04-		R		**CF185**		Ø 19,05	Alu
					PF800	Bch	Ø 22,20	Ch 43000001-, Alu, Rear Disc Brake, +/-ABS, -ESP
	04-				**PF660**	Bch	Ø 23,81	Alu, Rear Disc Brake, +ABS, +ESP
	04-				**PF659**	Bch	Ø 23,80	Alu, Rear Disc Brake, +ABS, -ESP
	06-				**PF110**	Del(BE)	Ø 20,64	+BFR
	04-				**PZ117**	Fte	Ø 15,87	Pla
1.3 CDTI 16V Eng.Z13DTJ (55kW)	05-		R		**CF185**		Ø 19,05	Alu
					PF800	Bch	Ø 22,20	Ch 43000001-, Alu, Rear Disc Brake, +/-ABS, -ESP
	05-				**PF110**	Del(BE)	Ø 20,64	+BFR
	05-				**PZ117**	Fte	Ø 15,87	Pla, M/T, LHD
1.4 Eng.Z14XEP (66kW)	04-		R		**CF185**		Ø 19,05	Alu
					PF800	Bch	Ø 22,20	Ch 43000001-, Alu, Rear Disc Brake, +/-ABS, -ESP
	04-				**PF660**	Bch	Ø 23,81	Alu, Rear Disc Brake, +ABS, +ESP
	04-				**PF659**	Bch	Ø 23,80	Alu, Rear Disc Brake, +ABS, -ESP
	04-				**PF110**	Del(BE)	Ø 20,64	+BFR
	04-				**PZ117**	Fte	Ø 15,87	Pla
1.6 Eng.Z16SE (64kW)	01-		R		**CF185**		Ø 19,05	Alu
					PF800	Bch	Ø 22,20	Ch 43000001-, Alu, Rear Disc Brake, +/-ABS, -ESP
	01-				**PF110**	Del(BE)	Ø 20,64	+BFR
	01-				**PZ117**	Fte	Ø 15,87	Pla
1.6 CNG Eng.Z16YNG (69kW)	06-				**PZ117**	Fte	Ø 15,87	Pla, LHD
1.7 CDTI 16V Eng.Z17DTH (74kW)	04-				**PZ117**	Fte	Ø 15,87	Pla, LHD
1.7 DI 16V Eng.Y17DTL (48kW)	01-		R		**CF185**		Ø 19,05	Alu
					PF800	Bch	Ø 22,20	Ch 43000001-, Alu, Rear Disc Brake, +/-ABS, -ESP
	05-				**PF110**	Del(BE)	Ø 20,64	+BFR
	01-				**PZ117**	Fte	Ø 15,87	Pla
1.7 DTI 16V Eng.Y17DT (55kW)	01-		R		**CF185**		Ø 19,05	Alu
	01-				**PF800**	Bch	Ø 22,20	Ch 43000001-, Alu, Rear Disc Brake, +/-ABS, -ESP
	01-				**PF110**	Del(BE)	Ø 20,64	+BFR
	01-				**PZ117**	Fte	Ø 15,87	Pla
Combo Tour III (X12) 2/12-								
1.3 CDTI Eng.A13FD (66kW)	12-		R		**CF827**	Loc	Ø 20,64	Alu, Mod. Van
	12-				**PF913**	Bch	Ø 23,81	Alu, +ABS, +ESP
	12-				**PF912**	Bch	Ø 23,81	Alu, +ABS, -ESP
	12-				**PZ146**	Fte	Ø 15,87	Alu
1.4 Eng.A14FC (88kW)	12-		R		**CF865**	Loc	Ø 25,40	Alu
	12-				**PF913**	Bch	Ø 23,81	Alu, +ABS, +ESP
	12-				**PF912**	Bch	Ø 23,81	Alu, +ABS, -ESP
	12-				**PZ146**	Fte	Ø 15,87	Alu
1.4 Eng.A14FP (70kW)	12-		R		**CF865**	Loc	Ø 25,40	Alu
	12-				**PF913**	Bch	Ø 23,81	Alu, +ABS, +ESP

OPEL

		Spare Parts	F/R	L/R	FRITECH ref.		DIMENSIONS mm.	NOTE
1.4 Eng.A14FP (70kW)	12-				**PF912**	Bch	Ø 23,81	Alu, +ABS, -ESP
	12-				**PZ146**	Fte	Ø 15,87	Alu
1.4 CNG Eng.A14FC (88kW)	12-		R		**CF865**	Loc	Ø 25,40	Alu
1.6 CDTI Eng.A16FDH (77kW)	12-		R		**CF827**	Loc	Ø 20,64	Alu, Mod. Van
1.6 CDTI Eng.A16FDL (66kW)	12-		R		**CF827**	Loc	Ø 20,64	Alu, Mod. Van
	12-				**PF913**	Bch	Ø 23,81	Alu, +ABS, +ESP, M/T+A/T
	12-				**PF912**	Bch	Ø 23,81	Alu, +ABS, -ESP, M/T+A/T
	12-				**PZ146**	Fte	Ø 15,87	Alu
2.0 CDTI Eng.A20FD (99kW)	12-		R		**CF865**	Loc	Ø 25,40	Alu
	12-				**PF913**	Bch	Ø 23,81	Alu, +ABS, +ESP
	12-				**PF912**	Bch	Ø 23,81	Alu, +ABS, -ESP
	12-				**PZ146**	Fte	Ø 15,87	Alu
Corsa A / Nova 9/82-3/93								
1.0 Eng.10S (33kW)	8/86-93		R		**CF105**		Ø 14,28	
	9/82-7/86		R		**CF044**		Ø 14,28	
	8/86-93		R		**CF009**		Ø 17,46	HDB
	9/82-7/86		R		**CF008**		Ø 17,46	HDB
	9/82-11/83				**PF159**	Del(AL)	Ø 20,64	
	12/83-7/85				**PF167**	Del(AX)	Ø 20,64	Alu, HDB
	12/83-7/85				**PF165**	Del(BZ)	Ø 20,64	Alu
	8/85-93				**PF162**	Del(CS,DD)	Ø 20,64	Alu
1.2 Eng.12NV (38kW)	90-		R		**CF008**		Ø 17,46	Ch -G400000, HDB
			R		**CF009**		Ø 17,46	Ch G4000001-, HDB
	1/90-93				**PF159**	Del(AL)	Ø 20,64	LHD
	1/90-93				**PF167**	Del(AX)	Ø 20,64	Alu, LHD, HDB
	1/90-				**PF162**	Del(CS,DD)	Ø 20,64	Ch -K4000000, Alu
1.2 Eng.12ST (40kW)	8/86-90		R		**CF009**		Ø 17,46	HDB
	9/82-7/86		R		**CF008**		Ø 17,46	HDB
	9/82-11/83				**PF159**	Del(AL)	Ø 20,64	
	12/83-7/85				**PF167**	Del(AX)	Ø 20,64	Alu, HDB
	8/85-90				**PF162**	Del(CS,DD)	Ø 20,64	Alu
1.2, i Eng.12NC/ C12NZ/ E12GV (33kW)	8/86-93		R		**CF009**		Ø 17,46	HDB
	9/82-7/86		R		**CF008**		Ø 17,46	HDB
	9/82-11/83				**PF159**	Del(AL)	Ø 20,64	
	12/83-7/85				**PF167**	Del(AX)	Ø 20,64	Alu, HDB
	8/85-93				**PF162**	Del(CS,DD)	Ø 20,64	Alu
1.3 Eng.13SB (51kW)	8/86-89		R		**CF009**		Ø 17,46	HDB
	9/82-7/86		R		**CF008**		Ø 17,46	HDB
	9/82-11/83				**PF159**	Del(AL)	Ø 20,64	
	12/83-7/85				**PF167**	Del(AX)	Ø 20,64	Alu, HDB
	8/85-89				**PF162**	Del(CS,DD)	Ø 20,64	Alu
1.3i, Kat Eng.13NB/ C13N (44kW)	8/86-90		R		**CF009**		Ø 17,46	HDB
	85-7/86		R		**CF008**		Ø 17,46	HDB
	85-90				**PF162**	Del(CS,DD)	Ø 20,64	Alu
1.4 i Eng.C14NZ/ X14SZ (44kW)	90-93		R		**CF009**		Ø 17,46	HDB
	90-93				**PF159**	Del(AL)	Ø 20,64	LHD
	90-93				**PF167**	Del(AX)	Ø 20,64	Alu, LHD, HDB
1.4 S Eng.14NV (53-55kW)	90-93		R		**CF009**		Ø 17,46	HDB
1.4 Si Eng.C14SE (60kW)	91-93		R		**CF009**		Ø 17,46	HDB
1.5 D Eng.15D(4EC1) (37kW)	8/87-93		R		**CF009**		Ø 17,46	HDB
	8/87-93				**PF162**	Del(CS,DD)	Ø 20,64	Alu
1.5 TD Eng.15DT(T4EC1) (49kW)	88-93		R		**CF009**		Ø 17,46	HDB
	88-93				**PF162**	Del(CS,DD)	Ø 20,64	Alu
1.6 GSI Eng.C16SEI (72kW)	89-93		R		**CF009**		Ø 17,46	HDB
1.6 GSI, Kat Eng.C16SE/ E16SE (74kW)	92-93		R		**CF009**		Ø 17,46	HDB
	92-93				**PF162**	Del(CS,DD)	Ø 20,64	Alu
1.6 i Eng.C16NZ (55kW)	88-92		R		**CF009**		Ø 17,46	HDB
Corsa B / Corsa 3/93-9/00								
1.0 i 12v Eng.X10XE (40kW)	96-00		R		**CF074**		Ø 19,05	
	96-00		R		**CF185**		Ø 19,05	Alu
	96-00				**PF038**	Del(EB)	Ø 20,64	Alu, -ABS, LHD
	96-00				**PF193**	Del(EL)	Ø 20,64	Alu, +ABS, LHD
	96-00				**PF249**	Del(EM)	Ø 20,64	Alu, -ABS, RHD
	96-00				**PF250**	Del(EP)	Ø 20,64	Alu, +ABS, RHD

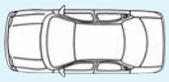		Spare Parts	F/R	L/R	FRITECH ref.		DIMENSIONS mm.	NOTE
1.2 i 16v Eng.X12XE (48kW)	98-00		R		**CF074**		Ø 19,05	
	98-00		R		**CF185**		Ø 19,05	Alu
	98-00				**PF038**	Del(EB)	Ø 20,64	Alu, -ABS, LHD
	98-00				**PF193**	Del(EL)	Ø 20,64	Alu, +ABS, LHD
	98-00				**PF249**	Del(EM)	Ø 20,64	Alu, -ABS, RHD
	98-00				**PF250**	Del(EP)	Ø 20,64	Alu, +ABS, RHD
1.2i Eng.12NZ/ C12NZ/ X12SZ (33kW)	93-00		R		**CF074**		Ø 19,05	
	93-00		R		**CF185**		Ø 19,05	Alu
	93-00				**PF038**	Del(EB)	Ø 20,64	Alu, -ABS, LHD
	93-00				**PF193**	Del(EL)	Ø 20,64	Alu, +ABS, LHD
	93-00				**PF249**	Del(EM)	Ø 20,64	Alu, -ABS, RHD
	93-00				**PF250**	Del(EP)	Ø 20,64	Alu, +ABS, RHD
1.4 i Eng.C14NZ/ X14SZ (40-44kW)	93-00		R		**CF074**		Ø 19,05	
	93-00		R		**CF185**		Ø 19,05	Alu
	93-00				**PF038**	Del(EB)	Ø 20,64	Alu, -ABS, LHD
	93-00				**PF193**	Del(EL)	Ø 20,64	Alu, +ABS, LHD
	93-00				**PF249**	Del(EM)	Ø 20,64	Alu, -ABS, RHD
	93-00				**PF250**	Del(EP)	Ø 20,64	Alu, +ABS, RHD
1.4 i 16v Eng.C14S/ C14SEL (63kW)	97-00		R		**CF074**		Ø 19,05	
	97-00		R		**CF185**		Ø 19,05	Alu
	97-00				**PF038**	Del(EB)	Ø 20,64	Alu, -ABS, LHD
	97-00				**PF193**	Del(EL)	Ø 20,64	Alu, +ABS, LHD
	97-00				**PF249**	Del(EM)	Ø 20,64	Alu, -ABS, RHD
	97-00				**PF250**	Del(EP)	Ø 20,64	Alu, +ABS, RHD
1.4 i 16v, SW Eng.X14XE (66kW)	94-00		R		**CF074**		Ø 19,05	
	94-00		R		**CF185**		Ø 19,05	Alu
	94-00				**PF038**	Del(EB)	Ø 20,64	Alu, -ABS, LHD
	94-00				**PF193**	Del(EL)	Ø 20,64	Alu, +ABS, LHD
	94-00				**PF249**	Del(EM)	Ø 20,64	Alu, -ABS, RHD
	94-00				**PF250**	Del(EP)	Ø 20,64	Alu, +ABS, RHD
1.4 Si Eng.C14SE (54-60kW)	93-00		R		**CF074**		Ø 19,05	
	93-00		R		**CF185**		Ø 19,05	Alu
	93-00				**PF038**	Del(EB)	Ø 20,64	Alu, -ABS, LHD
	93-00				**PF193**	Del(EL)	Ø 20,64	Alu, +ABS, LHD
	93-00				**PF249**	Del(EM)	Ø 20,64	Alu, -ABS, RHD
	93-00				**PF250**	Del(EP)	Ø 20,64	Alu, +ABS, RHD
1.5 D Eng.15D(4EC1) (37kW)	93-00		R		**CF074**		Ø 19,05	
	93-00		R		**CF185**		Ø 19,05	Alu
	93-00				**PF038**	Del(EB)	Ø 20,64	Alu, -ABS, LHD
	93-00				**PF193**	Del(EL)	Ø 20,64	Alu, +ABS, LHD
	93-00				**PF249**	Del(EM)	Ø 20,64	Alu, -ABS, RHD
	93-00				**PF250**	Del(EP)	Ø 20,64	Alu, +ABS, RHD
1.5 TD Eng.15DT(T4EC1) (49kW)	93-00		R		**CF074**		Ø 19,05	
	93-00		R		**CF185**		Ø 19,05	Alu
	93-00				**PF038**	Del(EB)	Ø 20,64	Alu, -ABS, LHD
	93-00				**PF193**	Del(EL)	Ø 20,64	Alu, +ABS, LHD
	93-00				**PF249**	Del(EM)	Ø 20,64	Alu, -ABS, RHD
	93-00				**PF250**	Del(EP)	Ø 20,64	Alu, +ABS, RHD
1.6 GSI 16v Eng.C16XE (80kW)	93-00		R		**CF074**		Ø 19,05	
	93-00		R		**CF185**		Ø 19,05	Alu
	93-00				**PF038**	Del(EB)	Ø 20,64	Alu, -ABS, LHD
	93-00				**PF193**	Del(EL)	Ø 20,64	Alu, +ABS, LHD
	93-00				**PF249**	Del(EM)	Ø 20,64	Alu, -ABS, RHD
	93-00				**PF250**	Del(EP)	Ø 20,64	Alu, +ABS, RHD
1.6 i 16v Eng.C16SEL (74kW)	97-00		R		**CF074**		Ø 19,05	
	97-00		R		**CF185**		Ø 19,05	Alu
	97-00				**PF038**	Del(EB)	Ø 20,64	Alu, -ABS, LHD
	97-00				**PF193**	Del(EL)	Ø 20,64	Alu, +ABS, LHD
	97-00				**PF249**	Del(EM)	Ø 20,64	Alu, -ABS, RHD
	97-00				**PF250**	Del(EP)	Ø 20,64	Alu, +ABS, RHD
1.6 i 16v Eng.X16XE (78kW)	94-00		R		**CF074**		Ø 19,05	
	94-00		R		**CF185**		Ø 19,05	Alu
	94-00				**PF038**	Del(EB)	Ø 20,64	Alu, -ABS, LHD
	94-00				**PF193**	Del(EL)	Ø 20,64	Alu, +ABS, LHD

OPEL

		Spare Parts	F/R	L/R	FRITECH ref.		DIMENSIONS mm.	NOTE
1.6 i 16v Eng.X16XE (78kW)	94-00				**PF249**	Del(EM)	Ø 20,64	Alu, -ABS, RHD
	94-00				**PF250**	Del(EP)	Ø 20,64	Alu, +ABS, RHD
1.7 D Eng.17D(4EE1)/ X17D (44kW)	96-00		R		**CF074**		Ø 19,05	
	96-00		R		**CF185**		Ø 19,05	Alu
	96-00				**PF038**	Del(EB)	Ø 20,64	Alu, -ABS, LHD
	96-00				**PF193**	Del(EL)	Ø 20,64	Alu, +ABS, LHD
	96-00				**PF249**	Del(EM)	Ø 20,64	Alu, -ABS, RHD
	96-00				**PF250**	Del(EP)	Ø 20,64	Alu, +ABS, RHD
Corsa C / Corsa II 9/00-6/06								
1.0 12v Eng.Z10XE (43kW)	00-		R		**CF074**		Ø 19,05	
	00-		R		**CF185**		Ø 19,05	Alu
					PF800	Bch	Ø 22,20	Ch 43000001-, Alu, Rear Disc Brake, +/-ABS, -ESP
					PF660	Bch	Ø 23,81	Ch 43000001-, Alu, Rear Disc Brake, +ABS, +ESP
					PF659	Bch	Ø 23,80	Ch 43000001-, Alu, Rear Disc Brake, +ABS, -ESP
					PF110	Del(BE)	Ø 20,64	Ch 43000001-, +BFR, Rear Drum Brake, +ABS, -ESP
					PF658		Ø 22,20	Ch 43000001-, Alu, Rear Drum Brake, +ABS, +ESP
					PF281		Ø 22,20	Ch -36999999, Alu
	00-				**PZ117**	Fte	Ø 15,87	Pla, M/T
1.0 12v Eng.Z10XEP (44kW)	03-		R		**CF074**		Ø 19,05	
	03-		R		**CF185**		Ø 19,05	Alu
					PF800	Bch	Ø 22,20	Ch 43000001-, Alu, Rear Disc Brake, +/-ABS, -ESP
					PF660	Bch	Ø 23,81	Ch 43000001-, Alu, Rear Disc Brake, +ABS, +ESP
					PF659	Bch	Ø 23,80	Ch 43000001-, Alu, Rear Disc Brake, +ABS, -ESP
					PF110	Del(BE)	Ø 20,64	Ch 43000001-, +BFR, Rear Drum Brake, +ABS, -ESP
					PF658		Ø 22,20	Ch 43000001-, Alu, Rear Drum Brake, +ABS, +ESP
					PF281		Ø 22,20	Ch -36999999, Alu
	03-				**PZ117**	Fte	Ø 15,87	Pla, M/T
1.2 16v Eng.Z12XE (55kW)	9/00-		R		**CF074**		Ø 19,05	
	9/00-		R		**CF185**		Ø 19,05	Alu
					PF800	Bch	Ø 22,20	Ch 43000001-, Alu, Rear Disc Brake, +/-ABS, -ESP
					PF660	Bch	Ø 23,81	Ch 43000001-, Alu, Rear Disc Brake, +ABS, +ESP
					PF659	Bch	Ø 23,80	Ch 43000001-, Alu, Rear Disc Brake, +ABS, -ESP
					PF110	Del(BE)	Ø 20,64	Ch 43000001-, +BFR, Rear Drum Brake, +ABS, -ESP
					PF658		Ø 22,20	Ch 43000001-, Alu, Rear Drum Brake, +ABS, +ESP
					PF281		Ø 22,20	Ch -36999999, Alu
	00-				**PZ117**	Fte	Ø 15,87	Pla, M/T
1.2 16v Twinport Eng.Z12XEP (59kW)	04-		R		**CF185**		Ø 19,05	Alu
					PF800	Bch	Ø 22,20	Ch 43000001-, Alu, Rear Disc Brake, +/-ABS, -ESP
					PF660	Bch	Ø 23,81	Ch 43000001-, Alu, Rear Disc Brake, +ABS, +ESP
					PF659	Bch	Ø 23,80	Ch 43000001-, Alu, Rear Disc Brake, +ABS, -ESP
					PF110	Del(BE)	Ø 20,64	Ch 43000001-, +BFR, Rear Drum Brake, +ABS, -ESP
					PF658		Ø 22,20	Ch 43000001-, Alu, Rear Drum Brake, +ABS, +ESP
					PF281		Ø 22,20	Ch -36999999, Alu
	04-				**PZ117**	Fte	Ø 15,87	Pla, M/T
1.3 CDTi 16v Eng.Z13DT (51kW)	6/03-		R		**CF074**		Ø 19,05	
	6/03-		R		**CF185**		Ø 19,05	Alu
					PF800	Bch	Ø 22,20	Ch 43000001-, Alu, Rear Disc Brake, +/-ABS, -ESP
					PF660	Bch	Ø 23,81	Ch 43000001-, Alu, Rear Disc Brake, +ABS, +ESP
					PF659	Bch	Ø 23,80	Ch 43000001-, Alu, Rear Disc Brake, +ABS, -ESP
					PF110	Del(BE)	Ø 20,64	Ch 43000001-, +BFR, Rear Drum Brake, +ABS, -ESP
					PF658		Ø 22,20	Ch 43000001-, Alu, Rear Drum Brake, +ABS, +ESP
					PF281		Ø 22,20	Ch -36999999, Alu
	03-				**PZ117**	Fte	Ø 15,87	Pla, M/T

		Spare Parts	F/R	L/R	FRITECH ref.		DIMENSIONS mm.	NOTE
1.4 16v Eng.Z14XE (66kW)	9/00-		R		**CF074**		Ø 19,05	
	9/00-		R		**CF185**		Ø 19,05	Alu
					PF800	Bch	Ø 22,20	Ch 43000001-, Alu, Rear Disc Brake, +/-ABS, -ESP
					PF660	Bch	Ø 23,81	Ch 43000001-, Alu, Rear Disc Brake, +ABS, +ESP
					PF659	Bch	Ø 23,80	Ch 43000001-, Alu, Rear Disc Brake, +ABS, -ESP
					PF110	Del(BE)	Ø 20,64	Ch 43000001-, +BFR, Rear Drum Brake, +ABS, -ESP
					PF658		Ø 22,20	Ch 43000001-, Alu, Rear Drum Brake, +ABS, +ESP
					PF281		Ø 22,20	Ch -36999999, Alu
	00-				**PZ117**	Fte	Ø 15,87	Pla, M/T
1.4 16v Twinport Eng.Z14XEP (66kW)	03-		R		**CF185**		Ø 19,05	Alu
					PF800	Bch	Ø 22,20	Ch 43000001-, Alu, Rear Disc Brake, +/-ABS, -ESP
					PF660	Bch	Ø 23,81	Ch 43000001-, Alu, Rear Disc Brake, +ABS, +ESP
					PF659	Bch	Ø 23,80	Ch 43000001-, Alu, Rear Disc Brake, +ABS, -ESP
					PF110	Del(BE)	Ø 20,64	Ch 43000001-, +BFR, Rear Drum Brake, +ABS, -ESP
					PF658		Ø 22,20	Ch 43000001-, Alu, Rear Drum Brake, +ABS, +ESP
					PF281		Ø 22,20	Ch -36999999, Alu
	03-				**PZ117**	Fte	Ø 15,87	Pla, M/T
1.7 CDTi Eng.Z17DTH (74kW)	03-		R		**CF320**		Ø 20,64	Alu, -ABS
					PF800	Bch	Ø 22,20	Ch 43000001-, Alu, Rear Disc Brake, +/-ABS, -ESP
					PF660	Bch	Ø 23,81	Ch 43000001-, Alu, Rear Disc Brake, +ABS, +ESP
					PF659	Bch	Ø 23,80	Ch 43000001-, Alu, Rear Disc Brake, +ABS, -ESP
					PF110	Del(BE)	Ø 20,64	Ch 43000001-, +BFR, Rear Drum Brake, +ABS, -ESP
					PF658		Ø 22,20	Ch 43000001-, Alu, Rear Drum Brake, +ABS, +ESP
					PF281		Ø 22,20	Ch -36999999, Alu
	03-				**PZ117**	Fte	Ø 15,87	Pla
1.7 Di 16v Eng.Y17DTL (48kW)	9/00-		R		**CF074**		Ø 19,05	
	9/00-		R		**CF185**		Ø 19,05	Alu
					PF800	Bch	Ø 22,20	Ch 43000001-, Alu, Rear Disc Brake, +/-ABS, -ESP
					PF660	Bch	Ø 23,81	Ch 43000001-, Alu, Rear Disc Brake, +ABS, +ESP
					PF659	Bch	Ø 23,80	Ch 43000001-, Alu, Rear Disc Brake, +ABS, -ESP
					PF110	Del(BE)	Ø 20,64	Ch 43000001-, +BFR, Rear Drum Brake, +ABS, -ESP
					PF658		Ø 22,20	Ch 43000001-, Alu, Rear Drum Brake, +ABS, +ESP
					PF281		Ø 22,20	Ch -36999999, Alu
	00-				**PZ117**	Fte	Ø 15,87	Pla
1.7 DTI 16v Eng.Y17DT (55kW)	9/00-		R		**CF074**		Ø 19,05	
	9/00-		R		**CF185**		Ø 19,05	Alu
					PF800	Bch	Ø 22,20	Ch 43000001-, Alu, Rear Disc Brake, +/-ABS, -ESP
					PF660	Bch	Ø 23,81	Ch 43000001-, Alu, Rear Disc Brake, +ABS, +ESP
					PF659	Bch	Ø 23,80	Ch 43000001-, Alu, Rear Disc Brake, +ABS, -ESP
					PF110	Del(BE)	Ø 20,64	Ch 43000001-, +BFR, Rear Drum Brake, +ABS, -ESP
					PF658		Ø 22,20	Ch 43000001-, Alu, Rear Drum Brake, +ABS, +ESP
					PF281		Ø 22,20	Ch -36999999, Alu
	00-				**PZ117**	Fte	Ø 15,87	Pla
1.8 16v Eng.Z18XE (92kW)					**PF800**	Bch	Ø 22,20	Ch 43000001-, Alu, Rear Disc Brake, +/-ABS, -ESP
					PF660	Bch	Ø 23,81	Ch 43000001-, Alu, Rear Disc Brake, +ABS, +ESP
					PF659	Bch	Ø 23,80	Ch 43000001-, Alu, Rear Disc Brake, +ABS, -ESP
					PF110	Del(BE)	Ø 20,64	Ch 43000001-, +BFR, Rear Drum Brake, +ABS, -ESP
					PF658		Ø 22,20	Ch 43000001-, Alu, Rear Drum Brake, +ABS, +ESP
					PF281		Ø 22,20	Ch -36999999, Alu
	00-				**PZ117**	Fte	Ø 15,87	Pla

OPEL

		Spare Parts	F/R	L/R	FRITECH ref.		DIMENSIONS mm.	NOTE
Corsa D 7/06-8/14								
1.0 12v Eng.A10XEP (48kW)	10-		R		**CF780**	Loc	Ø 19,05	Alu
	10-				**PF699**	Bch	Ø 22,20	Alu, +ESP
	10-				**PF700**	Bch	Ø 22,20	Alu, -ESP
	10-				**PZ146**	Fte	Ø 15,87	Alu
1.0 12v Eng.Z10XEP (44kW)	06-		R		**CF780**	Loc	Ø 19,05	Alu
	06-				**PF699**	Bch	Ø 22,20	Alu, +ESP
	06-				**PF700**	Bch	Ø 22,20	Alu, -ESP
	06-				**PZ146**	Fte	Ø 15,87	Alu
1.2 Eng.A12XEL (51kW)	10-		R		**CF780**	Loc	Ø 19,05	Alu
	10-				**PF699**	Bch	Ø 22,20	Alu, +ESP
	10-				**PF700**	Bch	Ø 22,20	Alu, -ESP
	10-				**PZ146**	Fte	Ø 15,87	Alu
1.2 16v Eng.A12XER (63kW)	10-		R		**CF780**	Loc	Ø 19,05	Alu
	10-				**PF699**	Bch	Ø 22,20	Alu, +ESP
	10-				**PF700**	Bch	Ø 22,20	Alu, -ESP
	10-				**PZ146**	Fte	Ø 15,87	Alu
1.2 16v Eng.Z12XEP (59kW)	06-		R		**CF780**	Loc	Ø 19,05	Alu
	06-				**PF699**	Bch	Ø 22,20	Alu, +ESP
	06-				**PF700**	Bch	Ø 22,20	Alu, -ESP
	06-				**PZ146**	Fte	Ø 15,87	Alu
1.2 GPL Eng.A12XER (61-63kW)	11-		R		**CF780**	Loc	Ø 19,05	Alu
	11-				**PF699**	Bch	Ø 22,20	Alu, +ESP
	11-				**PF700**	Bch	Ø 22,20	Alu, -ESP
	11-				**PZ146**	Fte	Ø 15,87	Alu
1.2 LPG Eng.Z12XEP (55-59kW)	09-		R		**CF780**	Loc	Ø 19,05	Alu
	09-				**PF699**	Bch	Ø 22,20	Alu, +ESP
	09-				**PF700**	Bch	Ø 22,20	Alu, -ESP
	09-				**PZ146**	Fte	Ø 15,87	Alu
1.3 CDTI Eng.A13DTR/ Z13DTE (70kW)	10-		R		**CF780**	Loc	Ø 19,05	Alu
	10-				**PF699**	Bch	Ø 22,20	Alu, +ESP
	10-				**PF700**	Bch	Ø 22,20	Alu, -ESP
	11-				**PZ146**	Fte	Ø 15,87	Alu
1.3 CDTi 16v Eng.Z13DTH (66kW)	06-		R		**CF780**	Loc	Ø 19,05	Alu
	06-				**PF699**	Bch	Ø 22,20	Alu, +ESP
	06-				**PF700**	Bch	Ø 22,20	Alu, -ESP
	11-				**PZ146**	Fte	Ø 15,87	Alu
1.3 CDTi 16v Eng.Z13DTJ/ A13DTC (55kW)	06-		R		**CF780**	Loc	Ø 19,05	Alu
	06-				**PF699**	Bch	Ø 22,20	Alu, +ESP
	06-				**PF700**	Bch	Ø 22,20	Alu, -ESP
	11-				**PZ146**	Fte	Ø 15,87	Alu
1.4 16v Eng.A14XER (74kW)	10-				**PF699**	Bch	Ø 22,20	Alu, +ESP
	10-				**PF700**	Bch	Ø 22,20	Alu, -ESP
	10-				**PZ146**	Fte	Ø 15,87	Alu
1.4 16v Eng.Z14XEP (66kW)	06-		R		**CF780**	Loc	Ø 19,05	Alu
	06-				**PF699**	Bch	Ø 22,20	Alu, +ESP
	06-				**PF700**	Bch	Ø 22,20	Alu, -ESP
	06-				**PZ146**	Fte	Ø 15,87	Alu
1.4 eco Eng.A14XEL (64kW)	09-				**PF699**	Bch	Ø 22,20	Alu, +ESP
	09-				**PF700**	Bch	Ø 22,20	Alu, -ESP
	09-				**PZ146**	Fte	Ø 15,87	Alu
1.4 LPG Eng.Z14XEP (66kW)	06-		R		**CF780**	Loc	Ø 19,05	Alu
	06-				**PF699**	Bch	Ø 22,20	Alu
	06-				**PZ146**	Fte	Ø 15,87	Alu
1.4 T Eng.A14NEL (88kW)	12-				**PF857**	Bch	Ø 23,81	Alu, +ESP
	12-				**PF858**	Bch	Ø 23,81	Alu, -ESP
1.6 T. Eng.A16LER/ Z16LER (155kW)	11-				**PF857**	Bch	Ø 23,81	Alu, +ESP
	11-				**PF858**	Bch	Ø 23,81	Alu, -ESP
	11-				**PZ146**	Fte	Ø 15,87	Alu
1.6 T. 16v Eng.Z16LEL (110kW)	06-				**PF857**	Bch	Ø 23,81	Alu, +ESP
	06-				**PF858**	Bch	Ø 23,81	Alu, -ESP
	06-				**PZ146**	Fte	Ø 15,87	Alu
1.6 T. 16v Eng.Z16LER (141kW)	07-				**PF857**	Bch	Ø 23,81	Alu
	07-				**PZ146**	Fte	Ø 15,87	Alu

		Spare Parts	F/R	L/R	FRITECH ref.		DIMENSIONS mm.	NOTE
1.7 CDTI Eng.A17DTS (96kW)	10-				**PF857**	Bch	Ø 23,81	Alu, +ESP
	10-				**PF858**	Bch	Ø 23,81	Alu, -ESP
	11-				**PZ146**	Fte	Ø 15,87	Alu
1.7 CDTi 16v Eng.Z17DTR (92kW)	06-		R		**CF780**	Loc	Ø 19,05	Alu
	06-				**PF857**	Bch	Ø 23,81	Alu, +ESP
	06-				**PF858**	Bch	Ø 23,81	Alu, -ESP
	11-				**PZ146**	Fte	Ø 15,87	Alu
Corsa E 9/14-								
1.0 Eng.B10XFL (66kW)	14-		R		**CF780**	Loc	Ø 19,05	Alu
	14-				**PF699**	Bch	Ø 22,20	Alu, Rear Drum Brake
	14-				**PF857**	Bch	Ø 23,81	Alu, Rear Disc Brake
1.0 Eng.B10XFT (85kW)	14-		R		**CF780**	Loc	Ø 19,05	Alu
	14-				**PF699**	Bch	Ø 22,20	Alu, Rear Drum Brake
	14-				**PF857**	Bch	Ø 23,81	Alu, Rear Disc Brake
1.2 Eng.B12XEL (51kW)	14-		R		**CF780**	Loc	Ø 19,05	Alu
	14-				**PF699**	Bch	Ø 22,20	Alu, Rear Drum Brake
	14-				**PF857**	Bch	Ø 23,81	Alu, Rear Disc Brake
1.3 CDTi Eng.B13DTC (55kW)	14-		R		**CF780**	Loc	Ø 19,05	Alu
	14-				**PF699**	Bch	Ø 22,20	Alu, Rear Drum Brake
	14-				**PF857**	Bch	Ø 23,81	Alu, Rear Disc Brake
1.3 CDTi Eng.B13DTE (70kW)	14-		R		**CF780**	Loc	Ø 19,05	Alu
	14-				**PF699**	Bch	Ø 22,20	Alu, Rear Drum Brake
	14-				**PF857**	Bch	Ø 23,81	Alu, Rear Disc Brake
1.4 Eng.B14XEJ (55kW)	14-		R		**CF780**	Loc	Ø 19,05	Alu
	14-				**PF699**	Bch	Ø 22,20	Alu, Rear Drum Brake
	14-				**PF857**	Bch	Ø 23,81	Alu, Rear Disc Brake
1.4 Eng.B14XEL (66kW)	14-		R		**CF780**	Loc	Ø 19,05	Alu
	14-				**PF699**	Bch	Ø 22,20	Alu, Rear Drum Brake
	14-				**PF857**	Bch	Ø 23,81	Alu, Rear Disc Brake
1.4 GPL Eng.B14XEL (66kW)	15-		R		**CF780**	Loc	Ø 19,05	Alu
	15-				**PF699**	Bch	Ø 22,20	Alu, Rear Drum Brake
	15-				**PF857**	Bch	Ø 23,81	Alu, Rear Disc Brake
1.4 T Eng.B14NEJ (74kW)	14-		R		**CF780**	Loc	Ø 19,05	Alu
	14-				**PF699**	Bch	Ø 22,20	Alu, Rear Drum Brake
	14-				**PF857**	Bch	Ø 23,81	Alu, Rear Disc Brake
Frontera A / Frontera 3/92-10/98								
2.0 i Sport Eng.C20NE/ X20SE (85kW)	92-		R		**CF237**		Ø 25,40	Ch -PV561270
	92-				**PF160**	Del(H)	Ø 20,64	Ch -PV561270
2.3 TD Eng.23DTR (74kW)	92-		R		**CF237**		Ø 25,40	Ch -PV561398
	92-				**PF160**	Del(H)	Ø 20,64	Ch -PV561270
2.4 i Eng.C24NE (92kW)	92-		R		**CF237**		Ø 25,40	Ch -PV560157
	92-				**PF160**	Del(H)	Ø 20,64	Ch -PV561270
GT 9/68-8/73								
1.1 Eng.11SR (44kW)	68-70		R		**CF264**		Ø 15,87	
1.9 Eng.19S (66kW)	68-73		R		**CF339**		Ø 15,87	
Insignia, SW 1/09-								
1.4 Eng.A14NET (103kW)	09-				**PF941**	Ate	Ø 25,40	Alu
1.4 LPG Eng.A14NET (103kW)	09-				**PF941**	Ate	Ø 25,40	Alu
1.6 Eng.A16XER (85kW)	09-				**PF941**	Ate	Ø 25,40	Alu
1.6 SIDi Eng.A16XHT (125kW)	13-				**PF941**	Ate	Ø 25,40	Alu
1.6 T Eng.A16LET (132kW)	09-				**PF941**	Ate	Ø 25,40	Alu
1.8 Eng.A18XER (103kW)	09-				**PF941**	Ate	Ø 25,40	Alu
2.0 CDTi Eng.A20DTC (81kW)	09-				**PF941**	Ate	Ø 25,40	Alu
2.0 CDTi Eng.A20DTE (103kW)	13-				**PF941**	Ate	Ø 25,40	Alu
2.0 CDTi Eng.A20DTE (88kW)	12-				**PF941**	Ate	Ø 25,40	Alu
2.0 CDTi Eng.A20DTJ (96kW)	09-				**PF941**	Ate	Ø 25,40	Alu
2.0 CDTi, 4WD Eng.A20DTH (118kW)	09-				**PF941**	Ate	Ø 25,40	Alu
2.0 CDTi, 4WD Eng.A20DTH (120kW)	13-				**PF941**	Ate	Ø 25,40	Alu
2.0 CDTi, 4WD Eng.A20DTR (140-143kW)	09-				**PF941**	Ate	Ø 25,40	Alu
2.0 CDTi, 4WD Eng.B20DTH (125kW)	15-				**PF941**	Ate	Ø 25,40	Alu
2.0 T 4WD Eng.A20NFT (184kW)	11-				**PF941**	Ate	Ø 25,40	Alu
2.0 T, 4WD Eng.A20NHT/ NFT (162kW)	09-				**PF941**	Ate	Ø 25,40	Alu
2.8 T. V6 4WD OPC Eng.A28NER (239kW)	09-				**PF941**	Ate	Ø 25,40	Alu

OPEL

		Spare Parts	F/R	L/R	FRITECH ref.		DIMENSIONS mm.	NOTE
2.8 V6 T Eng.A28NET (191kW)	09-				**PF941**	Ate	Ø 25,40	Alu
Kadett A, SW 9/62-8/65								
1.0 Eng.10N (29kW)	8/63-8/65		R		**CF264**		Ø 15,87	
1.0, Coupe Eng.10S (35kW)	8/63-8/65		R		**CF264**		Ø 15,87	
Kadett B, SW / Chevette B 9/65-8/73								
1.1, Coupe Eng.11N (33-37kW)	65-73		F	L	**CF342**		Ø 23,81	
	65-73		F	R	**CF343**		Ø 23,81	
	65-73		R		**CF264**		Ø 15,87	
	65-73				**PF109**	Del(BD)	Ø 20,64	+BFR
1.2, Coupe Eng.12S (44kW)	71-73		F	L	**CF342**		Ø 23,81	
	71-73		F	R	**CF343**		Ø 23,81	
	71-73		R		**CF264**		Ø 15,87	Front Drum Brake, Exc. Scandinavia
	71-73		R		**CF352**		Ø 19,05	Front Drum Brake, Scandinavia
	71-73				**PF109**	Del(BD)	Ø 20,64	+BFR
1.7 (Exc. SW) Eng.17N/ S (44-49-61kW)	67-71		R		**CF339**		Ø 15,87	
	67-71				**PF109**	Del(BD)	Ø 20,64	+BFR
1.9 Coupe (Exc. SW) Eng.19S (66kW)	67-73		R		**CF339**		Ø 15,87	Front Disc Brake, Exc. Scandinavia
	67-73		R		**CF233**		Ø 19,05	Front Disc Brake, Scandinavia
	67-73				**PF109**	Del(BD)	Ø 20,64	+BFR, Front Disc Brake, Mod. L, SW
	67-73				**PF160**	Del(H)	Ø 20,64	Front Disc Brake, Mod. S, Rally Sprint
Kadett C, SW / Chevette C 8/73-7/79								
1.0, Coupe Eng.10N (29kW)	74-79		F	L	**CF342**		Ø 23,81	
	74-79		F	R	**CF343**		Ø 23,81	
	74-79		R		**CF264**		Ø 15,87	Front Drum Brake, Exc. Sweden
	74-79		R		**CF352**		Ø 19,05	Front Disc Brake, Sweden
	74-79				**PF160**	Del(H)	Ø 20,64	
1.2, Coupe Eng.12N (38-40kW)	73-79		F	L	**CF342**		Ø 23,81	
	73-79		F	R	**CF343**		Ø 23,81	
	73-79		R		**CF264**		Ø 15,87	Front Drum Brake, Exc. Sweden
	73-79		R		**CF352**		Ø 19,05	Front Disc Brake, Sweden
	73-79				**PF160**	Del(H)	Ø 20,64	
1.2, Coupe Eng.12S (44kW)	73-79		F	L	**CF342**		Ø 23,81	
	73-79		F	R	**CF343**		Ø 23,81	
	73-79		R		**CF264**		Ø 15,87	Front Drum Brake, Exc. Sweden
	73-79		R		**CF352**		Ø 19,05	Front Disc Brake, Sweden
	73-79				**PF160**	Del(H)	Ø 20,64	
1.6, Coupe Eng.16S/ SH (55kW)	77-79		R		**CF233**		Ø 19,05	Front Disc Brake
	77-79				**PF160**	Del(H)	Ø 20,64	
1.9 GTE Coupe (Exc. SW) Eng.19E (77kW)	75-77		R		**CF233**		Ø 19,05	Front Disc Brake
	75-77				**PF160**	Del(H)	Ø 20,64	
2.0 GTE Coupe (Exc. SW) Eng.20EH (85kW)	8/77-7/79		R		**CF233**		Ø 19,05	Front Disc Brake
	8/77-7/79				**PF160**	Del(H)	Ø 20,64	
2.0 Rallye Coupe (Exc. SW) Eng.20E (81kW)	8/77-7/79		R		**CF233**		Ø 19,05	Front Disc Brake
	8/77-7/79				**PF160**	Del(H)	Ø 20,64	
Kadett City 8/73-7/79								
1.0 Eng.10N (29kW)	8/77-7/79		R		**CF264**		Ø 15,87	
	8/77-7/79				**PF160**	Del(H)	Ø 20,64	
1.2, Coupe Eng.12S (44-55kW)	8/77-7/79		R		**CF264**		Ø 15,87	
	8/77-7/79				**PF160**	Del(H)	Ø 20,64	
1.6 (44kW)	77-		R		**CF233**		Ø 19,05	
	77-				**PF160**	Del(H)	Ø 20,64	
Kadett D, SW / Astra D 8/79-8/84								
1.0 Eng.10S (33kW)	79-84		R		**CF044**		Ø 14,28	
	79-		R		**CF394**		Ø 19,05	Ch -2518194, SW
	-82		R		**CF152**		Ø 19,05	Ch 2518195-, SW
	79-84				**PF109**	Del(BD)	Ø 20,64	+BFR, +Servo
	79-84				**PF110**	Del(BE)	Ø 20,64	+BFR, +Servo
1.2 Eng.12N (39kW)	79-82		R		**CF044**		Ø 14,28	
	79-		R		**CF394**		Ø 19,05	Ch -2518194, SW
	-82		R		**CF152**		Ø 19,05	Ch 2518195-, SW
	79-82		R		**CF233**		Ø 19,05	SW, HDB
	79-82				**PF109**	Del(BD)	Ø 20,64	+BFR, +Servo
	79-82				**PF110**	Del(BE)	Ø 20,64	+BFR, +Servo

		Spare Parts	F/R	L/R	FRITECH ref.		DIMENSIONS mm.	NOTE
1.2 Eng.12S (44kW)	79-84		R		**CF044**		Ø 14,28	
	79-		R		**CF394**		Ø 19,05	Ch -2518194, SW
	-84		R		**CF152**		Ø 19,05	Ch 2518195-, SW
	8/79-7/82		R		**CF233**		Ø 19,05	SW, HDB
	79-84				**PF109**	Del(BD)	Ø 20,64	+BFR, +Servo
	79-84				**PF110**	Del(BE)	Ø 20,64	+BFR, +Servo
1.2 (Exc. SW) Eng.12ST (40kW)	82-84		R		**CF044**		Ø 14,28	
	82-		R		**CF394**		Ø 19,05	Ch -2518194, SW
	-84		R		**CF152**		Ø 19,05	Ch 2518195-, SW
	82-84				**PF109**	Del(BD)	Ø 20,64	+BFR, +Servo
	82-84				**PF110**	Del(BE)	Ø 20,64	+BFR, +Servo
1.3 Eng.13N (44kW)	79-84		R		**CF044**		Ø 14,28	
	79-84		R		**CF008**		Ø 17,46	HDB
	79-		R		**CF394**		Ø 19,05	Ch -2518194, SW
	-84		R		**CF152**		Ø 19,05	Ch 2518195-, SW
	79-84		R		**CF233**		Ø 19,05	SW, HDB
	79-84				**PF109**	Del(BD)	Ø 20,64	+BFR, +Servo
	79-84				**PF110**	Del(BE)	Ø 20,64	+BFR
1.3 Eng.13S (55kW)	79-84		R		**CF044**		Ø 14,28	
	79-84		R		**CF008**		Ø 17,46	HDB
	79-		R		**CF394**		Ø 19,05	Ch -2518194, SW
	-84		R		**CF152**		Ø 19,05	Ch 2518195-, SW
	79-84		R		**CF233**		Ø 19,05	SW, HDB
	79-84				**PF109**	Del(BD)	Ø 20,64	+BFR, +Servo
	79-84				**PF110**	Del(BE)	Ø 20,64	+BFR
1.6 Eng.16N/ S/ SH (66kW)	-84		R		**CF153**		Ø 17,46	Ch E2501708-, Mod. L, SW
	81-84		R		**CF008**		Ø 17,46	
	81-84				**PF109**	Del(BD)	Ø 20,64	+BFR, +Servo
	81-84				**PF110**	Del(BE)	Ø 20,64	+BFR, +Servo
1.6 D Eng.16D (40kW)	-84		R		**CF153**		Ø 17,46	Ch E2501708-
	82-84		R		**CF008**		Ø 17,46	
	82-84				**PF109**	Del(BD)	Ø 20,64	+BFR, +Servo
1.8 GTE (Exc. SW) Eng.18E (85kW)	83-84		R		**CF008**		Ø 17,46	
	83-84				**PF109**	Del(BD)	Ø 20,64	+BFR, +Servo
	83-84				**PF110**	Del(BE)	Ø 20,64	+BFR, +Servo
	83-84				**PF166**	Del(BH)	Ø 20,64	
Kadett E / Astra E, Belmont 9/84-8/91								
1.2 Eng.12SC (40kW)	84-86		R		**CF185**	Luc	Ø 19,05	Alu
	84-86		R		**CF105**		Ø 14,28	
	9/84-		R		**CF008**		Ø 17,46	Ch -G5000000
	84-86		R		**CF009**		Ø 17,46	
	84-86				**PF214**	Ate	Ø 22,20	+ABS
	84-86				**PF165**	Del(BZ)	Ø 20,64	Alu
	84-86				**PF164**	Del(CN,CZ)	Ø 20,64	Alu
	84-86				**PF161**	Del(EA)	Ø 20,64	Alu
	84-86				**PF038**	Del(EB)	Ø 20,64	Alu, -ABS
1.2 Eng.12ST (40kW)	84-88		R		**CF185**	Luc	Ø 19,05	Alu
	9/84-		R		**CF008**		Ø 17,46	Ch -G5000000
1.3 Eng.13S (55kW)	84-87		R		**CF185**	Luc	Ø 19,05	Alu
	84-87		R		**CF105**		Ø 14,28	
	9/84-		R		**CF008**		Ø 17,46	Ch -G5000000
	84-87		R		**CF009**		Ø 17,46	
	84-87				**PF214**	Ate	Ø 22,20	+ABS
	4/84-7/85				**PF165**	Del(BZ)	Ø 20,64	Alu
	8/84-85				**PF163**	Del(CA)	Ø 20,64	Alu
	84-87				**PF164**	Del(CN,CZ)	Ø 20,64	Alu
	84-87				**PF161**	Del(EA)	Ø 20,64	Alu
	84-87				**PF038**	Del(EB)	Ø 20,64	Alu, -ABS
1.3i, Kat Eng.13NB/ C13N/ 13N (44kW)	85-91		R		**CF105**		Ø 14,28	
	85-		R		**CF008**		Ø 17,46	Ch -G5000000
	85-91		R		**CF009**		Ø 17,46	
	89-91				**PF214**	Ate	Ø 22,20	+ABS
	85-91				**PF164**	Del(CN,CZ)	Ø 20,64	Alu
	85-91				**PF161**	Del(EA)	Ø 20,64	Alu

OPEL

		Spare Parts	F/R	L/R	FRITECH ref.		DIMENSIONS mm.	NOTE
1.3i, Kat Eng.13NB/ C13N/ 13N (44kW)	85-91				**PF038**	Del(EB)	Ø 20,64	Alu, -ABS
1.4 i Eng.C14NZ/ X14SZ (44kW)	90-91		R		**CF105**	Del(CZ)	Ø 14,28	
	90-91				**PF214**	Ate	Ø 22,20	+ABS
	90-91				**PF164**	Del(CN,CZ)	Ø 20,64	Alu
1.4 S Eng.14NV (55kW)	90-91		R		**CF105**	Del(CZ)	Ø 14,28	
	90-91				**PF214**	Ate	Ø 22,20	+ABS
	90-91				**PF164**	Del(CN,CZ)	Ø 20,64	Alu
1.5 TD Eng.15DT(T4EC1) (49-53kW)	88-91		R		**CF185**	Luc	Ø 19,05	Alu
	88-91		R		**CF074**		Ø 19,05	
	88-91				**PF214**	Ate	Ø 22,20	+ABS
	88-91				**PF038**	Del(EB)	Ø 20,64	Alu, -ABS
1.6 Eng.16N/ S/ SH (66kW)	84-86		R		**CF185**	Luc	Ø 19,05	Alu
	9/84-		R		**CF008**		Ø 17,46	Ch -G5000000
	84-86				**PF214**	Ate	Ø 22,20	+ABS
	84-86				**PF219**	Ate	Ø 22,20	-ABS
	84-86				**PF164**	Del(CN,CZ)	Ø 20,64	Alu
1.6 Eng.16SV (60kW)	86-91		R		**CF008**		Ø 17,46	Ch -G5000000
	86-91				**PF214**	Ate	Ø 22,20	+ABS
	86-91				**PF219**	Ate	Ø 22,20	-ABS
	86-91				**PF164**	Del(CN,CZ)	Ø 20,64	Alu
1.6 Eng.E16SE (74kW)	86-90		R		**CF008**		Ø 17,46	Ch -G5000000
1.6 D Eng.16D/ 16DA (40kW)	84-89		R		**CF185**	Luc	Ø 19,05	Alu
	9/84-		R		**CF008**		Ø 17,46	Ch -G5000000
	84-89				**PF214**	Ate	Ø 22,20	+ABS
	84-89				**PF219**	Ate	Ø 22,20	-ABS
	84-89				**PF164**	Del(CN,CZ)	Ø 20,64	Alu
1.6 i, Kat Eng.C16LZ/ NZ/ E16NZ (55kW)	86-91		R		**CF008**		Ø 17,46	Ch -G5000000
	86-91				**PF214**	Ate	Ø 22,20	+ABS
	86-91				**PF219**	Ate	Ø 22,20	-ABS
	86-91				**PF164**	Del(CN,CZ)	Ø 20,64	Alu
1.7 D Eng.17D (42kW)	89-91		R		**CF185**	Luc	Ø 19,05	Alu
	89-91		R		**CF008**		Ø 17,46	Ch -G5000000
	89-91		R		**CF074**		Ø 19,05	
	89-91				**PF214**	Ate	Ø 22,20	+ABS
	89-91				**PF219**	Ate	Ø 22,20	-ABS
	89-91				**PF038**	Del(EB)	Ø 20,64	Alu, -ABS
1.8 Eng.18E (85kW)	84-		R		**CF008**		Ø 17,46	Ch -G2502696, M/T
	-91		R		**CF009**		Ø 17,46	Ch G2502697-, M/T
	84-91		R		**CF154**		Ø 19,05	A/T
	84-91				**PF214**	Ate	Ø 22,20	+ABS
	84-91				**PF219**	Ate	Ø 22,20	-ABS
	84-91				**PF164**	Del(CN,CZ)	Ø 20,64	Alu
	84-91				**PF168**	Del(CT,CJ)	Ø 22,22	Alu
1.8 Eng.E18NV (62kW)	87-91		R		**CF008**		Ø 17,46	Ch -G2502696, M/T
	-9/91		R		**CF009**		Ø 17,46	Ch G2502697-, M/T
	87-91		R		**CF154**		Ø 19,05	A/T
	87-91				**PF214**	Ate	Ø 22,20	+ABS
	87-91				**PF219**	Ate	Ø 22,20	-ABS
	87-91				**PF164**	Del(CN,CZ)	Ø 20,64	Alu
	87-91				**PF168**	Del(CT,CJ)	Ø 22,22	Alu
1.8 i Eng.C18NE (74kW)	85-86		R		**CF185**	Luc	Ø 19,05	Alu
	85-		R		**CF008**		Ø 17,46	Ch -G2502696, M/T
	-86		R		**CF009**		Ø 17,46	Ch G2502697-, M/T
	85-86		R		**CF154**		Ø 19,05	A/T
	85-86				**PF214**	Ate	Ø 22,20	+ABS
	85-86				**PF219**	Ate	Ø 22,20	-ABS
	85-86				**PF164**	Del(CN,CZ)	Ø 20,64	Alu
	85-86				**PF168**	Del(CT,CJ)	Ø 22,22	Alu
1.8 i Eng.C18NT/ NZ/ NV (66kW)	90-		R		**CF008**		Ø 17,46	Ch -G2502696, M/T
	-9/91		R		**CF009**		Ø 17,46	Ch G2502697-, M/T
	90-91		R		**CF154**		Ø 19,05	A/T
	90-91				**PF214**	Ate	Ø 22,20	+ABS
	90-91				**PF219**	Ate	Ø 22,20	-ABS
	90-91				**PF164**	Del(CN,CZ)	Ø 20,64	Alu

		Spare Parts	F/R	L/R	FRITECH ref.		DIMENSIONS mm.	NOTE
1.8 i Eng.C18NT/ NZ/ NV (66kW)	90-91				**PF168**	Del(CT,CJ)	Ø 22,22	Alu
2.0 GSI Eng.20SEH (95kW)	86-91		R		**CF185**	Luc	Ø 19,05	Alu
	86-91		R		**CF009**		Ø 17,46	M/T
	86-91		R		**CF074**		Ø 19,05	
	86-91				**PF214**	Ate	Ø 22,20	+ABS
	86-91				**PF219**	Ate	Ø 22,20	-ABS
	86-91				**PF164**	Del(CN,CZ)	Ø 20,64	Alu
	86-91				**PF168**	Del(CT,CJ)	Ø 22,22	Alu
2.0 GSI 16v, Kat Eng.20XE/ 20XEJ/ C20XE	88-91		R		**CF009**		Ø 17,46	Exc. 16v, M/T
(110kW)	88-91		R		**CF074**		Ø 19,05	Exc. 16v
	88-91				**PF214**	Ate	Ø 22,20	Exc. 16v, +ABS
	88-91				**PF219**	Ate	Ø 22,20	Exc. 16v, -ABS
	88-91				**PF164**	Del(CN,CZ)	Ø 20,64	Alu, Exc. 16v
	88-91				**PF168**	Del(CT,CJ)	Ø 22,22	Alu, Exc. 16v
2.0 i, Kat Eng.20NE/ C20NE (85kW)	87-91		R		**CF008**		Ø 17,46	Ch -G5000000
	87-		R		**CF009**		Ø 17,46	M/T
	87-		R		**CF074**		Ø 19,05	
	87-				**PF214**	Ate	Ø 22,20	+ABS
	87-				**PF219**	Ate	Ø 22,20	-ABS
	87-				**PF164**	Del(CN,CZ)	Ø 20,64	Alu
	87-				**PF168**	Del(CT,CJ)	Ø 22,22	Alu
Kadett E Cabrio 9/84-8/91								
1.4 i Eng.C14NZ/ X14SZ (44kW)	90-91		R		**CF009**		Ø 17,46	
	90-91				**PF164**	Del(CN,CZ)	Ø 20,64	Alu
	90-91				**PF161**	Del(EA)	Ø 20,64	Alu
1.4 S Eng.14NV (55kW)	90-91		R		**CF009**		Ø 17,46	
	90-91				**PF164**	Del(CN,CZ)	Ø 20,64	Alu
	90-91				**PF161**	Del(EA)	Ø 20,64	Alu
1.6 Eng.16SV (60kW)	86-91		R		**CF009**		Ø 17,46	
	86-91				**PF164**	Del(CN,CZ)	Ø 20,64	Alu
	86-91				**PF161**	Del(EA)	Ø 20,64	Alu
1.6 i, Kat Eng.C16LZ/ NZ/ E16NZ (55kW)	86-91		R		**CF009**		Ø 17,46	
	86-91				**PF164**	Del(CN,CZ)	Ø 20,64	Alu
	86-91				**PF161**	Del(EA)	Ø 20,64	Alu
2.0 i GSI, KAT Eng.20NE/ C20NE (85kW)	3/87-		R		**CF009**		Ø 17,46	
	3/87-				**PF168**	Del(CT,CJ)	Ø 22,22	Alu
Kadett E SW 9/84-8/91								
1.2 Eng.12SC (40kW)	9/84-		R		**CF153**		Ø 17,46	Ch -G5000000
	84-86		R		**CF155**		Ø 17,46	Ch G5000001-
	9/84-		R		**CF152**		Ø 19,05	Ch -G5000000
	84-86		R		**CF074**		Ø 19,05	
	84-86		R		**CF154**		Ø 19,05	
	84-86				**PF038**	Del(EB)	Ø 20,64	Alu, -ABS
1.3 Eng.13S (55kW)	9/84-		R		**CF153**		Ø 17,46	Ch -G5000000
			R		**CF155**		Ø 17,46	Ch G5000001-
	9/84-		R		**CF152**		Ø 19,05	Ch -G5000000
	84-87		R		**CF074**		Ø 19,05	
	84-87		R		**CF154**		Ø 19,05	
	84-87				**PF038**	Del(EB)	Ø 20,64	Alu, -ABS
1.3i, Kat Eng.13NB/ C13N (44kW)	85-		R		**CF153**		Ø 17,46	Ch -G5000000
			R		**CF155**		Ø 17,46	Ch G5000001-
	85-		R		**CF152**		Ø 19,05	Ch -G5000000
	85-91		R		**CF074**		Ø 19,05	
	85-91		R		**CF154**		Ø 19,05	
	85-91				**PF038**	Del(EB)	Ø 20,64	Alu, -ABS
1.5 TD Eng.15DT(T4EC1) (49-53kW)	88-91		R		**CF074**		Ø 19,05	
	88-91				**PF038**	Del(EB)	Ø 20,64	Alu, -ABS
1.6 Eng.16N/ S/ SH (66kW)	84-86		R		**CF153**	Luc	Ø 17,46	Ch -G2502696
	84-86		R		**CF155**		Ø 17,46	Ch G2502697-
	84-86		R		**CF074**		Ø 19,05	Ch G5000001-
	84-86				**PF164**	Del(CN,CZ)	Ø 20,64	Alu
1.6 Eng.16SV (60kW)	86-91		R		**CF074**		Ø 19,05	Incl. Dysability vehicle
	86-91				**PF161**	Del(EA)	Ø 20,64	Alu
	86-91				**PF038**	Del(EB)	Ø 20,64	Alu, -ABS

OPEL

		Spare Parts	F/R	L/R	FRITECH ref.		DIMENSIONS mm.	NOTE
1.6 D Eng.16D/ 16DA (40kW)	84-89		R		**CF155**		Ø 17,46	
	84-89		R		**CF074**		Ø 19,05	
	84-89				**PF164**	Del(CN,CZ)	Ø 20,64	Alu
	84-89				**PF038**	Del(EB)	Ø 20,64	Alu, -ABS
1.6 i, Kat Eng.C16LZ/ NZ/ E16NZ (55kW)	86-91		R		**CF074**		Ø 19,05	Incl. Dysability vehicle
	86-91				**PF161**	Del(EA)	Ø 20,64	Alu
	86-91				**PF038**	Del(EB)	Ø 20,64	Alu, -ABS
1.7 D Eng.17D (42kW)	89-91		R		**CF074**		Ø 19,05	
	89-91				**PF161**	Del(EA)	Ø 20,64	Alu
	89-91				**PF038**	Del(EB)	Ø 20,64	Alu, -ABS
1.8 Eng.18E (85kW)	84-		R		**CF154**		Ø 19,05	Ch -G5000000, Incl. Dysability vehicle
	84-86		R		**CF074**		Ø 19,05	Incl. Dysability vehicle
	84-86				**PF161**	Del(EA)	Ø 20,64	Alu, Incl. Dysability vehicle
	84-86				**PF038**	Del(EB)	Ø 20,64	Alu, -ABS
1.8 Eng.E18NV (62kW)	87-		R		**CF154**		Ø 19,05	Ch -G5000000, Incl. Dysability vehicle
	87-91		R		**CF074**		Ø 19,05	Incl. Dysability vehicle
	87-91				**PF161**	Del(EA)	Ø 20,64	Alu, Incl. Dysability vehicle
	87-91				**PF038**	Del(EB)	Ø 20,64	Alu, -ABS
1.8 i Eng.C18NE/ NT (74kW)	85-		R		**CF154**		Ø 19,05	Ch -G5000000, Incl. Dysability vehicle
	85-86		R		**CF074**		Ø 19,05	Incl. Dysability vehicle
	85-86				**PF161**	Del(EA)	Ø 20,64	Alu, Incl. Dysability vehicle
	85-86				**PF038**	Del(EB)	Ø 20,64	Alu, -ABS
1.8 i Eng.C18NZ (66kW)	90-		R		**CF154**		Ø 19,05	Ch -G5000000, Incl. Dysability vehicle
	90-91		R		**CF074**		Ø 19,05	Incl. Dysability vehicle
	90-91				**PF161**	Del(EA)	Ø 20,64	Alu, Incl. Dysability vehicle
	90-91				**PF038**	Del(EB)	Ø 20,64	Alu, -ABS
2.0 i, Kat Eng.20NE/ C20NE (85kW)	87-91		R		**CF074**		Ø 19,05	
	87-91				**PF038**	Del(EB)	Ø 20,64	Alu, -ABS
Manta A 9/70-8/75								
1.2 Eng.12S (44kW)	72-		R		**CF365**		Ø 15,87	Ch -9662824
	-75		R		**CF352**		Ø 19,05	Ch 9662825-
	-75				**PF160**	Del(H)	Ø 20,64	Ch 9662825-
1.6 Eng.16N (44-50-66kW)	70-		R		**CF365**		Ø 15,87	Ch -9662824, Exc. Norway
	8/70-		R		**CF339**		Ø 15,87	Ch -9662824
	-75		R		**CF352**		Ø 19,05	Ch 9662825-, Exc. Norway
	-75		R		**CF233**		Ø 19,05	Ch 9662825-, Norway
	-75				**PF160**	Del(H)	Ø 20,64	Ch 9662825-
1.9 Eng.19S (65-66kW)	8/70-		R		**CF339**		Ø 15,87	Ch -9662824
	-75		R		**CF233**		Ø 19,05	Ch 9662825-, Norway
Manta B / Cavalier Coupe 9/75-8/88								
1.2 Eng.12N (40kW)	76-		R		**CF233**		Ø 19,05	Ch -G6100000
	-83		R		**CF154**		Ø 19,05	Ch G6100001-
	76-83		R		**CF394**		Ø 19,05	
	76-83				**PF160**	Del(H)	Ø 20,64	LHD
1.2 Eng.12S (44kW)	75-		R		**CF233**		Ø 19,05	Ch -G6100000
	-88		R		**CF154**		Ø 19,05	Ch G6100001-
	75-79		R		**CF394**		Ø 19,05	
	75-79				**PF160**	Del(H)	Ø 20,64	LHD
1.3 Eng.13N (44kW)	79-		R		**CF233**		Ø 19,05	Ch -G6100000
	-80				**PF160**	Del(H)	Ø 20,64	Ch G6100001-, LHD
1.3 Eng.13S (55kW)	81-		R		**CF233**		Ø 19,05	Ch -G6100000
	-88		R		**CF154**		Ø 19,05	Ch G6100001-
	81-86				**PF160**	Del(H)	Ø 20,64	LHD
1.6 Eng.16N (44kW)	75-		R		**CF233**		Ø 19,05	Ch -G6100000
	-80		R		**CF154**		Ø 19,05	Ch G6100001-
	75-80				**PF160**	Del(H)	Ø 20,64	LHD
1.6 Eng.16S/ SH (55kW)	75-81		R		**CF394**		Ø 19,05	Exc. Norway
	75-81				**PF160**	Del(H)	Ø 20,64	Exc. Norway, LHD
1.8 Eng.18S (66kW)	82-		R		**CF233**		Ø 19,05	Ch -G6100000
	-87		R		**CF154**		Ø 19,05	Ch G6100001-
	82-87				**PF160**	Del(H)	Ø 20,64	LHD
1.9 Eng.19N (55kW)	76-		R		**CF233**		Ø 19,05	Ch -G6100000
	-81		R		**CF154**		Ø 19,05	Ch G6100001-
	76-81				**PF160**	Del(H)	Ø 20,64	LHD

		Spare Parts	F/R	L/R	FRITECH ref.		DIMENSIONS mm.	NOTE
2.0 Eng.20E (81kW)	77-		R		**CF233**		Ø 19,05	Ch -G6100000
	-88		R		**CF154**		Ø 19,05	Ch G6100001-
	77-88				**PF160**	Del(H)	Ø 20,64	LHD
2.0 Eng.20N (66kW)	77-		R		**CF233**		Ø 19,05	Ch -G6100000
	-83		R		**CF154**		Ø 19,05	Ch G6100001-
	77-80				**PF160**	Del(H)	Ø 20,64	LHD
2.0 Eng.20S (74kW)	77-		R		**CF233**		Ø 19,05	Ch -G6100000
	-84		R		**CF154**		Ø 19,05	Ch G6100001-
	77-84				**PF160**	Del(H)	Ø 20,64	LHD
2.4 400 Eng.24E (106kW)	80-		R		**CF233**		Ø 19,05	Ch -G6100000
	80-				**PF160**	Del(H)	Ø 20,64	Ch -G6100000, LHD
Meriva A 5/03-6/10								
1.3 CDTi 16v Eng.Y13DT (51kW)	05-				**PF862**	Bch	Ø 23,81	Ch 54000001-64999999, Alu, +ESP
	05-				**PF861**	Bch	Ø 23,81	Ch 54000001-64999999, Alu, -ESP
	05-				**PF638**	Trw	Ø 23,81	Ch -54000000, Alu, +ESP
	05-				**PF537**	Trw	Ø 23,81	Ch -54000000, Alu, -ESP
1.3 CDTi 16v Eng.Z13DTJ (55kW)	03-				**PF862**	Bch	Ø 23,81	Ch 54000001-64999999, Alu, +ESP
	03-				**PF861**	Bch	Ø 23,81	Ch 54000001-64999999, Alu, -ESP
	5/03-				**PF638**	Trw	Ø 23,81	Ch -54000000, Alu, +ESP
	5/03-				**PF537**	Trw	Ø 23,81	Ch -54000000, Alu, -ESP
1.4 16v Twinport Eng.Z14XEP (66kW)	04-				**PF862**	Bch	Ø 23,81	Ch 54000001-64999999, Alu, +ESP
	04-				**PF861**	Bch	Ø 23,81	Ch 54000001-64999999, Alu, -ESP
	7/04-				**PF638**	Trw	Ø 23,81	Ch -54000000, Alu, +ESP
	7/04-				**PF537**	Trw	Ø 23,81	Ch -54000000, Alu, -ESP
1.6 Eng.Z16SE (64kW)	03-				**PF862**	Bch	Ø 23,81	Ch 54000001-64999999, Alu, +ESP
	03-				**PF861**	Bch	Ø 23,81	Ch 54000001-64999999, Alu, -ESP
	5/03-				**PF638**	Trw	Ø 23,81	Ch -54000000, Alu, +ESP
	5/03-				**PF537**	Trw	Ø 23,81	Ch -54000000, Alu, -ESP
1.6 16v Eng.Z16XE (74kW)	03-				**PF862**	Bch	Ø 23,81	Ch 54000001-64999999, Alu, +ESP
	03-				**PF861**	Bch	Ø 23,81	Ch 54000001-64999999, Alu, -ESP
	5/03-				**PF638**	Trw	Ø 23,81	Ch -54000000, Alu, +ESP
	5/03-				**PF537**	Trw	Ø 23,81	Ch -54000000, Alu, -ESP
1.6 16v Eng.Z16XEP (77kW)	06-				**PF862**	Bch	Ø 23,81	Ch 54000001-64999999, Alu, +ESP
	06-				**PF861**	Bch	Ø 23,81	Ch 54000001-64999999, Alu, -ESP
	06-				**PF638**	Trw	Ø 23,81	Ch -54000000, Alu, +ESP
	06-				**PF537**	Trw	Ø 23,81	Ch -54000000, Alu, -ESP
1.6 T. 16v Eng.Z16LET (132kW)	07-				**PF862**	Bch	Ø 23,81	Ch 54000001-64999999, Alu, +ESP
	07-				**PF861**	Bch	Ø 23,81	Ch 54000001-64999999, Alu, -ESP
	07-				**PF638**	Trw	Ø 23,81	Alu, +ESP
1.7 CDTi Eng.Z17DTH (74kW)	03-				**PF862**	Bch	Ø 23,81	Ch 54000001-64999999, Alu, +ESP
	03-				**PF861**	Bch	Ø 23,81	Ch 54000001-64999999, Alu, -ESP
	5/03-				**PF638**	Trw	Ø 23,81	Ch -54000000, Alu, +ESP
	5/03-				**PF537**	Trw	Ø 23,81	Ch -54000000, Alu, -ESP
1.7 CDTi 16v Eng.Z17DTR (92kW)	07-				**PF862**	Bch	Ø 23,81	Ch 54000001-64999999, Alu, +ESP
	07-				**PF861**	Bch	Ø 23,81	Ch 54000001-64999999, Alu, -ESP
	07-				**PF638**	Trw	Ø 23,81	Ch -54000000, Alu, +ESP
	07-				**PF537**	Trw	Ø 23,81	Ch -54000000, Alu, -ESP
1.7 DTI 16v Eng.Y17DT (55kW)	03-				**PF862**	Bch	Ø 23,81	Ch 54000001-64999999, Alu, +ESP
	03-				**PF861**	Bch	Ø 23,81	Ch 54000001-64999999, Alu, -ESP
	5/03-				**PF638**	Trw	Ø 23,81	Ch -54000000, Alu, +ESP
	5/03-				**PF537**	Trw	Ø 23,81	Ch -54000000, Alu, -ESP
1.8 16v Eng.Z18XE (92kW)	03-				**PF862**	Bch	Ø 23,81	Ch 54000001-64999999, Alu, +ESP
	03-				**PF861**	Bch	Ø 23,81	Ch 54000001-64999999, Alu, -ESP
	5/03-				**PF638**	Trw	Ø 23,81	Ch -54000000, Alu, +ESP
	5/03-				**PF537**	Trw	Ø 23,81	Ch -54000000, Alu, -ESP
Olympia A 8/67-8/71								
1.0, Coupe Eng.11SR (44kW)	67-71		R		**CF264**		Ø 15,87	
1.7, Coupe Eng.17N/ S (55kW)	67-71		R		**CF339**		Ø 15,87	
1.9 Coupe Eng.19S (65-66kW)	67-71		R		**CF339**		Ø 15,87	
Rekord B 8/65-2/67								
1.5, SW (44kW)	9/65-7/66		R		**CF339**		Ø 15,87	
1.7, Coupe, SW Eng.17S (55kW)	9/65-7/66		R		**CF339**		Ø 15,87	
1.9, Coupe Eng.19E (66kW)	65-67		R		**CF339**		Ø 15,87	

OPEL

		Spare Parts	F/R	L/R	FRITECH ref.		DIMENSIONS mm.	NOTE
Rekord C, SW 8/66-12/71								
1.5 Eng.15 (43-44kW)	9/66-68		R		**CF339**		Ø 15,87	
1.7, Coupe Eng.17S (44-49-55-61kW)	9/66-68		R		**CF339**		Ø 15,87	
1.9 Sprint, Coupe (Exc. SW) Eng.19H/ SH (78kW)	67-71		R		**CF153**		Ø 17,46	
1.9, Coupe Eng.19S (65-66kW)	9/66-68		R		**CF339**		Ø 15,87	
2.2, Coupe (Exc. SW) (70kW)	66-69		R		**CF339**		Ø 15,87	
Rekord D, SW / Carlton I 1/72-8/77								
1.7, Coupe Eng.17S (44-49-61kW)	72-75		R		**CF339**		Ø 15,87	Exc. Sweden
	72-75		R		**CF233**		Ø 19,05	Sweden
	72-75				**PF160**	Del(H)	Ø 20,64	Denmark
1.9, Coupe Eng.19SH (66-71kW)	72-77		R		**CF233**		Ø 19,05	Sweden
	72-77				**PF160**	Del(H)	Ø 20,64	
2.0, Coupe Eng.20S (74kW)	75-77		R		**CF233**		Ø 19,05	Sweden
	75-77				**PF160**	Del(H)	Ø 20,64	
2.1 D Eng.21D (44kW)	72-77		R		**CF339**		Ø 15,87	Exc. Sweden
	72-77		R		**CF233**		Ø 19,05	Sweden
	72-77				**PF038**	Del(EB)	Ø 20,64	Alu, -ABS
Rekord E, SW / Carlton II 8/77-8/86								
1.7 Eng.17N/ S (44-49-61kW)	1/77-9/82		R		**CF339**		Ø 15,87	Exc. SW
	77-		R		**CF233**		Ø 19,05	Ch -F1000188, HDB
	-82		R		**CF154**		Ø 19,05	Ch F1000189-
	77-				**PF279**	Ate	Ø 23,81	Ch -F1000188, Alu, LHD
	1/77-9/82				**PF160**	Del(H)	Ø 20,64	LHD
1.8 Eng.18N (55kW)	82-		R		**CF233**		Ø 19,05	Ch -F1000188, HDB
	-86		R		**CF154**		Ø 19,05	Ch F1000189-
	82-				**PF160**	Del(H)	Ø 20,64	Ch -F1000188
1.8 Eng.18S (66kW)	82-		R		**CF233**		Ø 19,05	Ch -F1000188, HDB
	-86		R		**CF154**		Ø 19,05	Ch F1000189-
	82-				**PF160**	Del(H)	Ø 20,64	Ch -F1000188
1.8 i Eng.C18NV (74kW)	85-		R		**CF233**		Ø 19,05	Ch -F1000188, HDB
	-86		R		**CF154**		Ø 19,05	Ch F1000189-
	85-				**PF160**	Del(H)	Ø 20,64	Ch -F1000188
1.9 Eng.19N (55kW)	77-82		R		**CF339**		Ø 15,87	Exc. SW
	77-		R		**CF233**		Ø 19,05	Ch -F1000188, HDB
	-82		R		**CF154**		Ø 19,05	Ch F1000189-
	77-				**PF279**	Ate	Ø 23,81	Ch -F1000188, Alu, LHD
	77-82				**PF160**	Del(H)	Ø 20,64	LHD
2.0 Eng.20E (81kW)	77-		R		**CF233**		Ø 19,05	
2.0 Eng.20S (74kW)	77-		R		**CF233**		Ø 19,05	Ch -F1000188, Exc. Sweden
	-86		R		**CF154**		Ø 19,05	Ch F1000189-
	77-				**PF279**	Ate	Ø 23,81	Ch -F1000188, Alu, LHD
	77-				**PF160**	Del(H)	Ø 20,64	Ch -F1000188, LHD
2.0 D Eng.20D (43kW)	77-		R		**CF233**		Ø 19,05	Ch -F1000188
	-82		R		**CF154**		Ø 19,05	Ch F1000189-
	77-				**PF279**	Ate	Ø 23,81	Ch -F1000188, Alu, LHD
	77-				**PF160**	Del(H)	Ø 20,64	Ch -F1000188, LHD
2.1 D Eng.21D (44kW)	77-		R		**CF233**		Ø 19,05	Ch -F1000188
	-78		R		**CF154**		Ø 19,05	Ch F1000189-
	77-				**PF279**	Ate	Ø 23,81	Ch -F1000188, Alu, LHD
	77-				**PF160**	Del(H)	Ø 20,64	Ch -F1000188, LHD
2.2 TD Eng.23TD (63kW)	84-		R		**CF233**		Ø 19,05	Ch -F1000188
	-86		R		**CF154**		Ø 19,05	Ch F1000189-
	84-				**PF279**	Ate	Ø 23,81	Ch -F1000188, Alu, LHD
	84-				**PF160**	Del(H)	Ø 20,64	Ch -F1000188, LHD
2.3 D Eng.23D (48-52kW)	78-		R		**CF233**		Ø 19,05	Ch -F1000188
	-86		R		**CF154**		Ø 19,05	Ch F1000189-
	78-				**PF279**	Ate	Ø 23,81	Ch -F1000188, Alu, LHD
	78-				**PF160**	Del(H)	Ø 20,64	Ch -F1000188, LHD
Signum 5/03-12/08								
1.8 16v Eng.Z18XE (90kW)	5/03-				**PF521**	Trw	Ø 25,40	Alu, +ESP, LHD
	5/03-				**PF520**	Trw	Ø 25,40	Alu, -ESP, LHD
1.8 16v Eng.Z18XER (103kW)	9/05-				**PF521**	Trw	Ø 25,40	Alu, +ESP, LHD
	9/05-				**PF520**	Trw	Ø 25,40	Alu, -ESP, LHD

		Spare Parts	F/R	L/R	FRITECH ref.		DIMENSIONS mm.	NOTE
1.9 CDTi Eng.Z19DT (88kW)	04-				**PF521**	Trw	Ø 25,40	Alu, +ESP, LHD
	04-				**PF520**	Trw	Ø 25,40	Alu, -ESP, LHD
1.9 CDTi Eng.Z19DTH (110kW)	04-				**PF521**	Trw	Ø 25,40	Alu, +ESP, LHD
	04-				**PF520**	Trw	Ø 25,40	Alu, -ESP, LHD
2.0 DTI 16v Eng.Y20DTH (74kW)	5/03-				**PF521**	Trw	Ø 25,40	Alu, +ESP, LHD
	5/03-				**PF520**	Trw	Ø 25,40	Alu, -ESP, LHD
2.0 T. 16v Eng.Z20NET (129kW)	5/03-				**PF521**	Trw	Ø 25,40	Alu, +ESP, LHD
2.2 16v Eng.Z22YH (114kW)	5/03-				**PF521**	Trw	Ø 25,40	Alu, +ESP, LHD
	5/03-				**PF520**	Trw	Ø 25,40	Alu, -ESP, LHD
2.2 DTI 16v Eng.Y22DTR (86-92kW)	5/03-				**PF521**	Trw	Ø 25,40	Alu, +ESP, LHD
	5/03-				**PF520**	Trw	Ø 25,40	Alu, -ESP, LHD
3.0 CDTi Eng.Y30DT (130kW)	5/03-				**PF521**	Trw	Ø 25,40	Alu, +ESP, LHD
	5/03-				**PF520**	Trw	Ø 25,40	Alu, -ESP, LHD
3.0 CDTi Eng.Z30DT (135kW)	9/05-				**PF521**	Trw	Ø 25,40	Alu, +ESP, LHD
	9/05-				**PF520**	Trw	Ø 25,40	Alu, -ESP, LHD
3.2 V6 Eng.Z32SE (155kW)	5/03-				**PF521**	Trw	Ø 25,40	Alu, +ESP, LHD
Tigra A 7/94-12/00								
1.4 i 16v Eng.X14XE (63-66kW)	94-00		R		**CF074**		Ø 19,05	
	94-00		R		**CF185**		Ø 19,05	Alu
	94-00				**PF038**	Del(EB)	Ø 20,64	Alu, -ABS, LHD
	94-00				**PF193**	Del(EL)	Ø 20,64	Alu, +ABS, LHD
	94-00				**PF249**	Del(EM)	Ø 20,64	Alu, -ABS, RHD
	94-00				**PF250**	Del(EP)	Ø 20,64	Alu, +ABS, RHD
1.6 i 16v Eng.C16SEL (74kW)	97-98		R		**CF074**		Ø 19,05	
	97-98		R		**CF185**		Ø 19,05	Alu
	97-98				**PF038**	Del(EB)	Ø 20,64	Alu, -ABS, LHD
	97-98				**PF193**	Del(EL)	Ø 20,64	Alu, +ABS, LHD
	97-98				**PF249**	Del(EM)	Ø 20,64	Alu, -ABS, RHD
	97-98				**PF250**	Del(EP)	Ø 20,64	Alu, +ABS, RHD
1.6 i 16v Eng.X16XE (78kW)	94-98		R		**CF074**		Ø 19,05	
	94-98		R		**CF185**		Ø 19,05	Alu
	94-98				**PF038**	Del(EB)	Ø 20,64	Alu, -ABS, LHD
	94-98				**PF193**	Del(EL)	Ø 20,64	Alu, +ABS, LHD
	94-98				**PF249**	Del(EM)	Ø 20,64	Alu, -ABS, RHD
	94-98				**PF250**	Del(EP)	Ø 20,64	Alu, +ABS, RHD
Tigra B Twintop 6/04-12/09								
1.3 CDTi 16v Eng.Z13DT (51kW)	04-		R		**CF185**		Ø 19,05	Alu, Rear Drum Brake
	6/04-				**PF800**	Bch	Ø 22,20	Alu, Rear Disc Brake, +/-ABS, -ESP
	6/04-				**PF660**	Bch	Ø 23,81	Ch 43000001-, Alu, Rear Disc Brake, +ABS, +ESP
	6/04-				**PF659**	Bch	Ø 23,80	Ch 43000001-, Alu, Rear Disc Brake, +ABS, -ESP
	04-				**PZ117**	Fte	Ø 15,87	Pla
1.4 16v Eng.Z14XEP (66kW)	04-		R		**CF185**		Ø 19,05	Alu, Rear Drum Brake
	6/04-				**PF800**	Bch	Ø 22,20	Alu, Rear Disc Brake, +/-ABS, -ESP
	6/04-				**PF660**	Bch	Ø 23,81	Ch 43000001-, Alu, Rear Disc Brake, +ABS, +ESP
	6/04-				**PF659**	Bch	Ø 23,80	Ch 43000001-, Alu, Rear Disc Brake, +ABS, -ESP
	04-				**PZ117**	Fte	Ø 15,87	Pla
1.8 16v Eng.Z18XE (92kW)	6/04-				**PF800**	Bch	Ø 22,20	Alu, Rear Disc Brake, +/-ABS, -ESP
	6/04-				**PF660**	Bch	Ø 23,81	Ch 43000001-, Alu, Rear Disc Brake, +ABS, +ESP
	6/04-				**PF659**	Bch	Ø 23,80	Ch 43000001-, Alu, Rear Disc Brake, +ABS, -ESP
	04-				**PZ117**	Fte	Ø 15,87	Pla
Vectra A (86, 87) / Cavalier III 9/88-11/95								
1.4 S Eng.14NV (55kW)	88-92		R		**CF074**		Ø 19,05	
	88-92		R		**CF185**		Ø 19,05	Alu
	88-92				**PF214**	Ate	Ø 22,20	+ABS
	88-				**PF161**	Del(EA)	Ø 20,64	Ch -NV299999, Alu, -ABS
	-92				**PF038**	Del(EB)	Ø 20,64	Ch P1000001-, Alu, -ABS
	88-92				**PF198**	Del(EJ)	Ø 22,20	Alu, +ABS
1.6 Eng.16SV (60kW)	88-93		R		**CF074**		Ø 19,05	
	88-93		R		**CF185**		Ø 19,05	Alu
	88-93				**PF214**	Ate	Ø 22,20	+ABS
	88-				**PF161**	Del(EA)	Ø 20,64	Ch -NV299999, Alu, -ABS
	-93				**PF038**	Del(EB)	Ø 20,64	Ch P1000001-, Alu, -ABS
	88-93				**PF198**	Del(EJ)	Ø 22,20	Alu, +ABS

OPEL

		Spare Parts	F/R	L/R	FRITECH ref.		DIMENSIONS mm.	NOTE
1.6 i Eng.X16SZ (52kW)	93-95		R		**CF074**		Ø 19,05	
	93-95		R		**CF185**		Ø 19,05	Alu
	93-95				**PF214**	Ate	Ø 22,20	+ABS
	93-				**PF161**	Del(EA)	Ø 20,64	Ch -NV299999, Alu, -ABS
	-95				**PF038**	Del(EB)	Ø 20,64	Ch P1000001-, Alu, -ABS
	93-95				**PF198**	Del(EJ)	Ø 22,20	Alu, +ABS
1.6 i, Kat Eng.16LZ2/ C16NZ/ NZ2/ E16NZ (55kW)	88-95		R		**CF074**		Ø 19,05	
	88-95		R		**CF185**		Ø 19,05	Alu
	92-95				**PF214**	Ate	Ø 22,20	+ABS
	88-				**PF161**	Del(EA)	Ø 20,64	Ch -NV299999, Alu, -ABS
	-95				**PF038**	Del(EB)	Ø 20,64	Ch P1000001-, Alu, -ABS
	92-95				**PF198**	Del(EJ)	Ø 22,20	Alu, +ABS
1.7 D Eng.17D/ DR (42-44kW)	88-92		R		**CF074**		Ø 19,05	
	88-92		R		**CF185**		Ø 19,05	Alu
	88-92				**PF214**	Ate	Ø 22,20	+ABS
	88-				**PF161**	Del(EA)	Ø 20,64	Ch -NV299999, Alu, -ABS
	-92				**PF038**	Del(EB)	Ø 20,64	Ch P1000001-, Alu, -ABS
	88-92				**PF198**	Del(EJ)	Ø 22,20	Alu, +ABS
1.7 TDS Eng.17DT(TC4EE1)/ X17DT (60kW)	90-95		R		**CF074**		Ø 19,05	
	90-95		R		**CF185**		Ø 19,05	Alu
	90-95				**PF214**	Ate	Ø 22,20	+ABS
	90-				**PF161**	Del(EA)	Ø 20,64	Ch -NV299999, Alu, -ABS
	-95				**PF038**	Del(EB)	Ø 20,64	Ch P1000001-, Alu, -ABS
	90-95				**PF198**	Del(EJ)	Ø 22,20	Alu, +ABS
1.8, 4WD, Kat Eng.18SV/ C18NZ/ E18NVR	88-95		R		**CF074**		Ø 19,05	
(65-66kW)	88-95		R		**CF185**		Ø 19,05	Alu
	92-95				**PF214**	Ate	Ø 22,20	+ABS
	88-				**PF161**	Del(EA)	Ø 20,64	Ch -NV299999, Alu, -ABS
	-95				**PF038**	Del(EB)	Ø 20,64	Ch P1000001-, Alu, -ABS
	92-95				**PF198**	Del(EJ)	Ø 22,20	Alu, +ABS
2.0 GT 16v Kat, 4WD Eng.20XE/ 20XEJ/ C20XE	89-95				**PF219**	Ate	Ø 22,20	-ABS
(110kW)	89-				**PF168**	Del(CT,CJ)	Ø 22,22	Ch -NV299999, Alu, Exc. Japan/Belgium/U.K., -ABS
	-95				**PF199**	Del(EK)	Ø 22,20	Ch P5030832-, Alu, Exc. Japan/Belgium, -ABS
2.0 i Eng.C20NEF (74kW)	88-89				**PF219**	Ate	Ø 22,20	-ABS
	88-				**PF168**	Del(CT,CJ)	Ø 22,22	Ch -NV299999, Alu, Exc. Japan/Belgium/U.K., -ABS
	-89				**PF199**	Del(EK)	Ø 22,20	Ch P5030832-, Alu, Exc. Japan/Belgium, -ABS
2.0 i 16v, 4WD Eng.X20XEV (100kW)	94-95				**PF219**	Ate	Ø 22,20	-ABS
	94-				**PF168**	Del(CT,CJ)	Ø 22,22	Ch -NV299999, Alu, Exc. Japan/Belgium/U.K., -ABS
	-95				**PF199**	Del(EK)	Ø 22,20	Ch P5030832-, Alu, Exc. Japan/Belgium, -ABS
2.0 i T. 4WD Eng.C20LET (150kW)	94-95				**PF219**	Ate	Ø 22,20	-ABS
	94-				**PF168**	Del(CT,CJ)	Ø 22,22	Ch -NV299999, Alu, Exc. Japan/Belgium/U.K., -ABS
	-95				**PF199**	Del(EK)	Ø 22,20	Ch P5030832-, Alu, Exc. Japan/Belgium, -ABS
2.0 i, 4WD Eng.20SEH (95kW)	88-92				**PF219**	Ate	Ø 22,20	-ABS
	88-				**PF168**	Del(CT,CJ)	Ø 22,22	Ch -NV299999, Alu, Exc. Japan/Belgium/U.K., -ABS
	-92				**PF199**	Del(EK)	Ø 22,20	Ch P5030832-, Alu, Exc. Japan/Belgium, -ABS
2.0 i, 4WD, Kat Eng.20NE/ C20NE (85kW)	88-95				**PF219**	Ate	Ø 22,20	-ABS
	88-				**PF168**	Del(CT,CJ)	Ø 22,22	Ch -NV299999, Alu, Exc. Japan/Belgium/U.K., -ABS
	-95				**PF199**	Del(EK)	Ø 22,20	Ch P5030832-, Alu, Exc. Japan/Belgium, -ABS
Vectra B, SW / Vectra 10/95-4/02								
1.6 i Eng.16LZ2 (55kW)	95-12/98		R		**CF074**		Ø 19,05	LHD
	95-12/98		R		**CF185**		Ø 19,05	Alu, LHD
	1/99-		R		**CF320**		Ø 20,64	Alu
					PF279	Ate	Ø 23,81	Ch W1285447-, Alu
	96-				**PF282**	Del(ER)	Ø 22,20	Ch -W1285446, Alu
	95-				**PZ097**	Fte	Ø 15,87	Ch W1238519/5276826/7154258-
1.6 i Eng.X16SZR (55kW)	95-12/98		R		**CF074**		Ø 19,05	LHD
	95-12/98		R		**CF185**		Ø 19,05	Alu, LHD
	1/99-		R		**CF320**		Ø 20,64	Alu

		Spare Parts	F/R	L/R	FRITECH ref.		DIMENSIONS mm.	NOTE
1.6 i Eng.X16SZR (55kW)					**PF279**	Ate	Ø 23,81	Ch W1285447-, Alu
	96-				**PF282**	Del(ER)	Ø 22,20	Ch -W1285446, Alu
	95-				**PZ098**	Fte	Ø 15,87	Ch -W1238518/5276825/7154258
	95-				**PZ097**	Fte	Ø 15,87	Ch W1238519/5276826/7154258-
1.6 i 16v Eng.X16XEL/ Y16XE/ Z16XE (74kW)					**PF279**	Ate	Ø 23,81	Ch W1285447-, Alu, LHD
	96-				**PF282**	Del(ER)	Ø 22,20	Ch -W1285446, Alu, LHD
	95-				**PZ098**	Fte	Ø 15,87	Ch -W1238518/5276825/7154258
	95-				**PZ097**	Fte	Ø 15,87	Ch W1238519/5276826/7154258-
1.7 TD Eng.X17DT(TC4EE1) (60kW)	95-				**PF282**	Del(ER)	Ø 22,20	Ch -W1285446, Alu
	95-				**PZ098**	Fte	Ø 15,87	Ch -W1238518/5276825/7154258
1.8 16v Eng.X18XE (85kW)					**PF279**	Ate	Ø 23,81	Ch W1285447-, Alu, LHD
	96-				**PF282**	Del(ER)	Ø 22,20	Ch -W1285446, Alu, LHD
	95-				**PZ098**	Fte	Ø 15,87	Ch -W1238518/5276825/7154258
	95-				**PZ097**	Fte	Ø 15,87	Ch W1238519/5276826/7154258-
1.8 16v Eng.X18XE1 (85kW)					**PF279**	Ate	Ø 23,81	Ch W1285447-, Alu, LHD
	96-				**PF282**	Del(ER)	Ø 22,20	Ch -W1285446, Alu, LHD
1.8 16v Eng.Z18XE (92kW)	-02				**PF279**	Ate	Ø 23,81	Ch W1285447-, Alu, LHD
	00-				**PF282**	Del(ER)	Ø 22,20	Ch -W1285446, Alu, LHD
	00-				**PZ098**	Fte	Ø 15,87	Ch -W1238518/5276825/7154258
	00-				**PZ097**	Fte	Ø 15,87	Ch W1238519/5276826/7154258-
2.0 Di 16v Eng.X20DTL (60kW)	11/96-12/98		R		**CF074**		Ø 19,05	LHD
	11/96-12/98		R		**CF185**		Ø 19,05	Alu, LHD
	1/99-02		R		**CF320**		Ø 20,64	Alu
					PF279	Ate	Ø 23,81	Ch W1285447-, Alu
	96-				**PF282**	Del(ER)	Ø 22,20	Ch -W1285446, Alu
	96-				**PZ098**	Fte	Ø 15,87	Ch -W1238518/5276825/7154258
	96-				**PZ097**	Fte	Ø 15,87	Ch W1238519/5276826/7154258-
2.0 DTI 16v Eng.X20DTH/ Y20DTH (74kW)					**PF279**	Ate	Ø 23,81	Ch W1285447-, Alu, LHD
	97-				**PF282**	Del(ER)	Ø 22,20	Ch -W1285446, Alu, LHD
	97-				**PZ098**	Fte	Ø 15,87	Ch -W1238518/5276825/7154258
	97-				**PZ097**	Fte	Ø 15,87	Ch W1238519/5276826/7154258-
2.0 i Eng.20NEJ (82kW)	95-				**PZ098**	Fte	Ø 15,87	Ch -W1238518/5276825/7154258
	95-				**PZ097**	Fte	Ø 15,87	Ch W1238519/5276826/7154258-
2.0 i 16v Eng.C20SEL (100kW)	95-				**PF523**	Ate	Ø 23,81	Ch -W1285446, Alu, LHD
	-9/00				**PF522**	Ate	Ø 25,40	Ch W1285447-, Alu
	95-				**PZ098**	Fte	Ø 15,87	Ch -W1238518/5276825/7154258
	95-				**PZ097**	Fte	Ø 15,87	Ch W1238519/5276826/7154258-
2.0 i 16v Eng.X20XEV (100kW)	95-				**PF523**	Ate	Ø 23,81	Ch -W1285446, Alu, LHD
	-9/00				**PF522**	Ate	Ø 25,40	Ch W1285447-, Alu
	95-				**PZ098**	Fte	Ø 15,87	Ch -W1238518/5276825/7154258
	95-				**PZ097**	Fte	Ø 15,87	Ch W1238519/5276826/7154258-
2.2 16v Eng.Z22SE (108kW)	00-02				**PF109**	Del(BD)	Ø 20,64	+BFR, LHD
	00-				**PZ097**	Fte	Ø 15,87	Ch W1238519/5276826/7154258-
2.2 DTI 16v Eng.Y22DTR (92kW)	00-02				**PF109**	Del(BD)	Ø 20,64	+BFR
	00-				**PZ097**	Fte	Ø 15,87	Ch W1238519/5276826/7154258-
2.5 i 500 Eng.X25XE (143kW)	98-00				**PF523**	Ate	Ø 23,81	Alu, LHD
	98-				**PZ097**	Fte	Ø 15,87	Ch W1238519/5276826/7154258-
2.5 i V6 Eng.X25XE (125kW)	10/95-9/00				**PF523**	Ate	Ø 23,81	Alu, LHD
	95-				**PZ098**	Fte	Ø 15,87	Ch -W1238518/5276825/7154258
	95-				**PZ097**	Fte	Ø 15,87	Ch W1238519/5276826/7154258-
2.6 V6 Eng.Y26SE (125kW)	00-02				**PF522**	Ate	Ø 25,40	Alu, LHD
	00-				**PZ097**	Fte	Ø 15,87	Ch W1238519/5276826/7154258-
Vectra C, SW, Gts / Vectra II 4/02-12/08								
1.6 16v Eng.Z16XE (74kW)	04-				**PF521**	Trw	Ø 25,40	Alu, +ESP, LHD
	04-				**PF520**	Trw	Ø 25,40	Alu, -ESP, LHD
1.8 Eng.Z18XEL (81kW)	4/02-				**PF521**	Trw	Ø 25,40	Alu, +ESP, LHD
	4/02-				**PF520**	Trw	Ø 25,40	Alu, -ESP, LHD
1.8 16v Eng.Z18XE (90kW)	4/02-				**PF521**	Trw	Ø 25,40	Alu, +ESP, LHD
	4/02-				**PF520**	Trw	Ø 25,40	Alu, -ESP, LHD
1.8 16v Eng.Z18XER (103kW)	1/06-				**PF521**	Trw	Ø 25,40	Alu, +ESP, LHD
	1/06-				**PF520**	Trw	Ø 25,40	Alu, -ESP, LHD
1.9 CDTi Eng.Z19DT (88kW)	04-				**PF521**	Trw	Ø 25,40	Alu, +ESP, LHD
	04-				**PF520**	Trw	Ø 25,40	Alu, -ESP, LHD

OPEL

		Spare Parts	F/R	L/R	FRITECH ref.		DIMENSIONS mm.	NOTE
1.9 CDTi Eng.Z19DTH (110kW)	04-				**PF521**	Trw	Ø 25,40	Alu, +ESP, LHD
	04-				**PF520**	Trw	Ø 25,40	Alu, -ESP, LHD
2.0 DTI 16v Eng.Y20DTH (74kW)	4/02-				**PF521**	Trw	Ø 25,40	Alu, +ESP, LHD
	4/02-				**PF520**	Trw	Ø 25,40	Alu, -ESP, LHD
2.0 T. 16v Eng.Z20NET (129kW)	03-				**PF521**	Trw	Ø 25,40	Alu, +ESP, LHD
2.2 16v (Exc. SW) Eng.Z22SE (108kW)	4/02-				**PF521**	Trw	Ø 25,40	Alu, +ESP, LHD
	4/02-				**PF520**	Trw	Ø 25,40	Alu, -ESP, LHD
2.2 16v Direct Eng.Z22YH (114kW)	03-				**PF521**	Trw	Ø 25,40	Alu, +ESP, LHD
2.2 DTI 16v Eng.Y22DTR (92kW)	4/02-				**PF521**	Trw	Ø 25,40	Alu, +ESP, LHD
	4/02-				**PF520**	Trw	Ø 25,40	Alu, -ESP, LHD
3.0 CDTi Eng.Y30DT (130kW)	03-				**PF521**	Trw	Ø 25,40	Alu, +ESP, LHD
	03-				**PF520**	Trw	Ø 25,40	Alu, -ESP, LHD
3.0 CDTi Eng.Z30DT (135kW)	8/05-				**PF521**	Trw	Ø 25,40	Alu, +ESP, LHD
	8/05-				**PF520**	Trw	Ø 25,40	Alu, -ESP, LHD
3.2 V6 Eng.Z32SE (155kW)	4/02-				**PF521**	Trw	Ø 25,40	Alu, +ESP, LHD
Viva, SW 1/63-10/79								
1.0	63-66		F	L	**CF371**		Ø 19,05	
	63-66		F	R	**CF372**		Ø 19,05	
	63-66		R		**CF261**		Ø 17,78	Alu
1.1 (35kW)	66-70		F	L	**CF371**		Ø 19,05	
	66-70		F	R	**CF372**		Ø 19,05	
	66-70		R		**CF261**		Ø 17,78	Alu
1.1 (Exc. SW) (33kW)	63-66		F	L	**CF371**		Ø 19,05	
	63-66		F	R	**CF372**		Ø 19,05	
	63-66		R		**CF261**		Ø 17,78	Alu
1.1 SL90 (44kW)	65-70		F	L	**CF371**		Ø 19,05	
	65-70		F	R	**CF372**		Ø 19,05	
	65-70		R		**CF261**		Ø 17,78	Alu
1.2 Eng.HC (43kW)	63-79		F	L	**CF371**		Ø 19,05	
	63-79		F	R	**CF372**		Ø 19,05	
	63-79		R		**CF261**		Ø 17,78	Alu
1.6 (51-53kW)	68-70		R		**CF261**	Luc	Ø 17,78	Alu
	70-72		R		**CF373**	Luc	Ø 19,05	Alu
1.8 (57kW)	73-79		R		**CF373**	Luc	Ø 19,05	Alu
2.0 GT (Exc. SW) (78kW)	68-70		R		**CF261**	Luc	Ø 17,78	Alu
2.3 (81kW)	72-73		R		**CF373**	Luc	Ø 19,05	Alu
Zafira A 4/99-10/05								
1.6 Eng.Z16XEP (76kW)	03-		R		**CF320**		Ø 20,64	Alu
	03-				**PF557**	Luc	Ø 23,81	Alu, +ESP
	03-				**PF280**	Luc	Ø 23,81	Alu, -ESP
	03-				**PZ079**	Fte	Ø 15,87	Pla, LHD
	03-				**PZ104**	Fte	Ø 15,87	LHD
1.6 16v Eng.X16XEL/ Z16XE (74kW)	99-05		R		**CF320**		Ø 20,64	Alu
	99-05				**PF557**	Luc	Ø 23,81	Alu, +ESP
	99-05				**PF280**	Luc	Ø 23,81	Alu, -ESP
	99-05				**PZ079**	Fte	Ø 15,87	Pla, LHD
	99-05				**PZ104**	Fte	Ø 15,87	LHD
1.6 CNG Eng.Z16YNG (71kW)	01-05		R		**CF320**		Ø 20,64	Alu
	01-05				**PF557**	Luc	Ø 23,81	Alu, +ESP
	01-05				**PF280**	Luc	Ø 23,81	Alu, -ESP
	01-05				**PZ079**	Fte	Ø 15,87	Pla, LHD
	01-05				**PZ104**	Fte	Ø 15,87	LHD
1.6 i 16v Eng.X16SZR (55kW)	99-		R		**CF185**		Ø 19,05	Alu, Exc. Germany/Switzerland/Austria
1.8 16v Eng.X18XE/ 1 (85kW)	99-00				**PF557**	Luc	Ø 23,81	Alu, +ESP
	99-00				**PF280**	Luc	Ø 23,81	Alu, -ESP
	99-00				**PZ079**	Fte	Ø 15,87	Pla, LHD
	99-00				**PZ104**	Fte	Ø 15,87	LHD
1.8 16v Eng.Z18XE (92kW)	9/00-				**PF557**	Luc	Ø 23,81	Alu, +ESP
	9/00-				**PF280**	Luc	Ø 23,81	Alu, -ESP
	9/00-				**PZ079**	Fte	Ø 15,87	Pla, LHD
	9/00-				**PZ104**	Fte	Ø 15,87	LHD
2.0 16v T. OPC Eng.Z20LET (141kW)	9/01-				**PF557**	Luc	Ø 23,81	Alu, +ESP
	9/01-				**PF280**	Luc	Ø 23,81	Alu, -ESP
	9/01-				**PZ079**	Fte	Ø 15,87	Pla, LHD

		Spare Parts	F/R	L/R	FRITECH ref.		DIMENSIONS mm.	NOTE
2.0 16v T. OPC Eng.Z20LET (141kW)	9/01-				**PZ104**	Fte	Ø 15,87	LHD
2.0 Di 16v Eng.X20DTL (60kW)	99-				**PF557**	Luc	Ø 23,81	Alu, +ESP
	99-				**PF280**	Luc	Ø 23,81	Alu, -ESP
	99-				**PZ079**	Fte	Ø 15,87	Pla, LHD
	99-				**PZ104**	Fte	Ø 15,87	LHD
2.0 DTi Eng.Y20DTL (63kW)	03-				**PF557**	Luc	Ø 23,81	Alu, +ESP
	03-				**PF280**	Luc	Ø 23,81	Alu, -ESP
	03-				**PZ079**	Fte	Ø 15,87	Pla, LHD
	03-				**PZ104**	Fte	Ø 15,87	LHD
2.0 DTI 16v Eng.Y20DTH (74kW)	9/00-				**PF557**	Luc	Ø 23,81	Alu, +ESP
	9/00-				**PF280**	Luc	Ø 23,81	Alu, -ESP
	9/00-				**PZ079**	Fte	Ø 15,87	Pla, LHD
	9/00-				**PZ104**	Fte	Ø 15,87	LHD
2.0 T. 16v Eng.Z20LER (147kW)	11/02-				**PF557**	Luc	Ø 23,81	Alu, +ESP
	11/02-				**PF280**	Luc	Ø 23,81	Alu, -ESP
	11/02-				**PZ079**	Fte	Ø 15,87	Pla, LHD
	11/02-				**PZ104**	Fte	Ø 15,87	LHD
2.2 16v Eng.Z22SE (108kW)	9/00-				**PF557**	Luc	Ø 23,81	Alu, +ESP
	9/00-				**PF280**	Luc	Ø 23,81	Alu, -ESP
	9/00-				**PZ079**	Fte	Ø 15,87	Pla, LHD
	9/00-				**PZ104**	Fte	Ø 15,87	LHD
2.2 DTI 16v Eng.Y22DTR (86-92kW)	1/02-				**PF557**	Luc	Ø 23,81	Alu, +ESP
	1/02-				**PF280**	Luc	Ø 23,81	Alu, -ESP
	1/02-				**PZ079**	Fte	Ø 15,87	Pla, LHD
	1/02-				**PZ104**	Fte	Ø 15,87	LHD
Zafira B 10/05-12/14								
1.6 16v Eng.Z16XEP (77kW)	05-				**PZ079**	Fte	Ø 15,87	Pla, LHD
	05-				**PZ104**	Fte	Ø 15,87	LHD
	05-				**PZ098**	Fte	Ø 15,87	
1.6 16v Eng.Z16XER (83-85kW)	08-				**PZ079**	Fte	Ø 15,87	Pla
	08-				**PZ104**	Fte	Ø 15,87	LHD
	08-				**PZ098**	Fte	Ø 15,87	
1.6 16v Eng.Z16YNG (69kW)	08-				**PZ079**	Fte	Ø 15,87	Pla, LHD
	08-				**PZ104**	Fte	Ø 15,87	LHD
1.7 CDTi 16v Eng.Z17DTR/ Z17DTJ (81-92kW)	08-				**PZ079**	Fte	Ø 15,87	Pla
	08-				**PZ104**	Fte	Ø 15,87	LHD
	08-				**PZ098**	Fte	Ø 15,87	
1.8 Eng.A18XEL (88kW)	13-				**PZ079**	Fte	Ø 15,87	Pla, LHD
	13-				**PZ104**	Fte	Ø 15,87	LHD
1.8 16v Eng.Z18XEP/ Z18 (103kW)	05-				**PZ079**	Fte	Ø 15,87	Pla, LHD
	05-				**PZ104**	Fte	Ø 15,87	LHD
	05-				**PZ098**	Fte	Ø 15,87	
1.9 CDTi Eng.Z19DT (74kW)	05-				**PZ079**	Fte	Ø 15,87	Pla, LHD
	05-				**PZ104**	Fte	Ø 15,87	LHD
	05-				**PZ098**	Fte	Ø 15,87	
1.9 CDTi Eng.Z19DT (88kW)	05-				**PZ079**	Fte	Ø 15,87	Pla, LHD
	05-				**PZ104**	Fte	Ø 15,87	LHD
	05-				**PZ098**	Fte	Ø 15,87	
1.9 CDTi Eng.Z19DTH (110kW)	05-				**PZ079**	Fte	Ø 15,87	Pla, LHD
	05-				**PZ104**	Fte	Ø 15,87	LHD
	05-				**PZ098**	Fte	Ø 15,87	
2.0 OPC Eng.Z20LEH (177kW)	06-				**PZ079**	Fte	Ø 15,87	Pla, LHD
	06-				**PZ104**	Fte	Ø 15,87	LHD
2.0 T. 16v Eng.Z20LER (147kW)	05-				**PZ079**	Fte	Ø 15,87	Pla, LHD
	05-				**PZ104**	Fte	Ø 15,87	LHD
	05-				**PZ098**	Fte	Ø 15,87	
2.2 Eng.Z22YH (110kW)	05-				**PZ079**	Fte	Ø 15,87	Pla, LHD
	05-				**PZ104**	Fte	Ø 15,87	LHD
	05-				**PZ098**	Fte	Ø 15,87	
Zafira C 12/11-								
1.4 T Eng.A14NEL (88kW)	11-				**PF941**	Ate	Ø 25,40	Alu
1.4 T Eng.A14NET (103kW)	11-				**PF941**	Ate	Ø 25,40	Alu
1.6 T ecoM Eng.A16XNT (110kW)	11-				**PF941**	Ate	Ø 25,40	Alu

OPEL

		Spare Parts	F/R	L/R	FRITECH ref.		DIMENSIONS mm.	NOTE
2.0 CDTI Eng.A20DTH (118-121kW)	11-				**PF941**	Ate	Ø 25,40	Alu
2.0 CDTI Eng.A20DTJ (96kW)	11-				**PF941**	Ate	Ø 25,40	Alu
2.0 CDTI Eng.A20DTL (81kW)	11-				**PF941**	Ate	Ø 25,40	Alu
2.0 CDTi Eng.B20DTH (125kW)	15-				**PF941**	Ate	Ø 25,40	Alu

OPEL LCV

Arena 3/98-8/01								
1.9 D Eng.F8Q600/ 606 (44kW)	98-01		R		**CF225**	Bdx	Ø 23,81	-ABS
	98-01		R		**CF250**	Luc	Ø 25,40	+ABS
2.5 D Eng.S8U758/ 780/ 782 (55kW)	98-01		R		**CF250**	Luc	Ø 25,40	
Astra F Van (55) 10/91-1/99								
1.4 i Eng.C14NZ (44kW)	91-99		R		**CF074**		Ø 19,05	
	91-99		R		**CF185**		Ø 19,05	Alu
	91-99				**PF214**	Ate	Ø 22,20	+ABS
	91-99				**PF038**	Del(EB)	Ø 20,64	Alu, -ABS
1.6 16v Eng.X16XEL (74kW)			R		**CF009**		Ø 17,46	Ch -R2500000
	-98		R		**CF074**		Ø 19,05	Ch R2500001-
	-98		R		**CF185**		Ø 19,05	Ch R2500001-, Alu
	94-98				**PF214**	Ate	Ø 22,20	+ABS
	94-98				**PF219**	Ate	Ø 22,20	-ABS
	94-98				**PF038**	Del(EB)	Ø 20,64	Alu, -ABS
	94-98				**PF198**	Del(EJ)	Ø 22,20	Alu, +ABS
	94-98				**PF199**	Del(EK)	Ø 22,20	Alu, -ABS
1.6 i Eng.C16NZ (55kW)	91-93		R		**CF074**		Ø 19,05	
	91-93		R		**CF185**		Ø 19,05	Alu
	91-93				**PF214**	Ate	Ø 22,20	+ABS
1.6 i Eng.X16SZ (52kW)	93-96		R		**CF074**		Ø 19,05	
	93-96		R		**CF185**		Ø 19,05	Alu
	93-96				**PF214**	Ate	Ø 22,20	+ABS
1.7 D Eng.17D (42kW)	91-92		R		**CF074**		Ø 19,05	
	91-92		R		**CF185**		Ø 19,05	Alu
	91-92				**PF214**	Ate	Ø 22,20	+ABS
1.7 D Eng.17D/ DR (44kW)	92-99		R		**CF074**		Ø 19,05	
	92-99		R		**CF185**		Ø 19,05	Alu
	92-99				**PF214**	Ate	Ø 22,20	+ABS
1.7 TD Eng.X17DT (60kW)			R		**CF009**		Ø 17,46	Ch -R2500000
	-98		R		**CF074**		Ø 19,05	Ch R2500001-
	-98		R		**CF185**		Ø 19,05	Ch R2500001-, Alu
	95-98				**PF214**	Ate	Ø 22,20	+ABS
	95-98				**PF219**	Ate	Ø 22,20	-ABS
	95-98				**PF038**	Del(EB)	Ø 20,64	Alu, -ABS
	95-98				**PF198**	Del(EJ)	Ø 22,20	Alu, +ABS
	95-98				**PF199**	Del(EK)	Ø 22,20	Alu, -ABS
1.7 TD Eng.X17DTL (50kW)	94-99		R		**CF074**		Ø 19,05	
	94-99		R		**CF185**		Ø 19,05	Alu
	94-99				**PF214**	Ate	Ø 22,20	+ABS
Astra G Van (F70) 1/99-2/04								
1.6i Eng.X16SZR (55kW)	99-00		R		**CF185**		Ø 19,05	Alu
	99-00				**PF280**	Luc	Ø 23,81	Alu, -ESP
1.6i Eng.Z16SE (62kW)	00-		R		**CF185**		Ø 19,05	Alu
	00-				**PF280**	Luc	Ø 23,81	Alu, -ESP
1.7 CDTi Eng.Z17DTL (59kW)	03-04		R		**CF185**		Ø 19,05	Alu
	03-04				**PF557**	Luc	Ø 23,81	Alu, +ESP
	03-04				**PF280**	Luc	Ø 23,81	Alu, -ESP
	03-04				**PZ078**	Fte	Ø 15,87	Pla
	03-04				**PZ103**	Fte	Ø 15,87	
1.7 DTi Eng.Y17DT (55kW)	01-04		R		**CF185**		Ø 19,05	Alu
	01-04				**PF557**	Luc	Ø 23,81	Alu, +ESP
	01-04				**PF280**	Luc	Ø 23,81	Alu, -ESP
	01-04				**PZ078**	Fte	Ø 15,87	Pla
	01-04				**PZ103**	Fte	Ø 15,87	
1.7 TD Eng.X17DTL (50kW)	99-04		R		**CF185**		Ø 19,05	Alu
	99-04				**PF280**	Luc	Ø 23,81	Alu, -ESP

		Spare Parts	F/R	L/R	FRITECH ref.		DIMENSIONS mm.	NOTE
2.0 Di 16v Eng.X20DTL (60kW)	99-04				**PF280**	Luc	Ø 23,81	Alu, -ESP
2.0 DTi Eng.Y20DTH (74kW)	99-04				**PF557**	Luc	Ø 23,81	Alu, +ESP
	99-04				**PF280**	Luc	Ø 23,81	Alu, -ESP
	99-04				**PZ078**	Fte	Ø 15,87	Pla
	99-04				**PZ103**	Fte	Ø 15,87	
Astra H Van 3/04-11/09								
1.4 16v Eng.Z14XEP (66kW)	3/04-		R		**CF320**		Ø 20,64	Alu, -ABS
	3/04-				**PZ078**	Fte	Ø 15,87	Pla
	3/04-				**PZ103**	Fte	Ø 15,87	
1.6 16v Eng.Z16XEP (76kW)	05-		R		**CF320**		Ø 20,64	Alu, -ABS
	05-06				**PF657**	Trw	Ø 25,40	Alu, +ESP
	06-				**PF865**	Trw	Ø 25,40	Alu, +ESP
	05-06				**PF656**	Trw	Ø 25,40	Alu, -ESP
	06-				**PF866**	Trw	Ø 25,40	Alu, -ESP
	05-				**PZ078**	Fte	Ø 15,87	Pla, M/T
	05-				**PZ103**	Fte	Ø 15,87	M/T
1.7 CDTi Eng.Z17DTH (74kW)	3/04-				**PZ078**	Fte	Ø 15,87	Pla
	3/04-				**PZ103**	Fte	Ø 15,87	
1.7 CDTi Eng.Z17DTL (59kW)	05-06		R		**CF320**		Ø 20,64	Alu, -ABS
	05-06				**PF657**	Trw	Ø 25,40	Alu, +ESP
	05-06				**PF656**	Trw	Ø 25,40	Alu, -ESP
	05-06				**PZ078**	Fte	Ø 15,87	Pla
	05-06				**PZ103**	Fte	Ø 15,87	
1.9 CDTi Eng.Z19DTH (110kW)	05-				**PZ078**	Fte	Ø 15,87	Pla
	05-				**PZ103**	Fte	Ø 15,87	
1.9 CDTi, 16v Eng.Z19DT/ DTJ (88kW)	3/04-				**PZ078**	Fte	Ø 15,87	Pla
	3/04-				**PZ103**	Fte	Ø 15,87	
Campo (TF) / Brava Pick-up 8/87-12/03								
2.2 D, 4WD Eng.C223 (39kW)	91-96		R		**CF237**		Ø 25,40	
2.3, 4WD Eng.23P (72kW)	94-96		R		**CF237**		Ø 25,40	
2.3, 4WD Eng.4ZD1 (69kW)	91-94		R		**CF237**		Ø 25,40	
	91-94				**PF160**	Del(H)	Ø 20,64	
2.5 D, 4WD Eng.4JA1 (56kW)	91-94		R		**CF237**		Ø 25,40	
	91-94				**PF160**	Del(H)	Ø 20,64	
2.5 DTI, 4WD Eng.4JA1T (74kW)	01-		R		**CF237**		Ø 25,40	
2.5 TD, 4WD Eng.4JA1T (56kW)	94-		R		**CF237**		Ø 25,40	
3.1 TD, 4WD Eng.4JG2T (80kW)	92-		R		**CF237**		Ø 25,40	
	92-				**PF160**	Del(H)	Ø 20,64	
Combo I (71) 7/94-10/01								
1.2 Eng.C12NZ/ X12SZ (33kW)	94-		R		**CF154**		Ø 19,05	
	94-				**PF038**	Del(EB)	Ø 20,64	Alu, -ABS, LHD
	94-				**PF193**	Del(EL)	Ø 20,64	Alu, +ABS, LHD
	94-				**PF249**	Del(EM)	Ø 20,64	Alu, -ABS, RHD
	94-				**PF250**	Del(EP)	Ø 20,64	Alu, +ABS, RHD
1.4 i Eng.C14NZ/ X14SZ (44kW)	94-01		R		**CF154**		Ø 19,05	
	94-01				**PF038**	Del(EB)	Ø 20,64	Alu, -ABS, LHD
	94-01				**PF193**	Del(EL)	Ø 20,64	Alu, +ABS, LHD
	94-01				**PF249**	Del(EM)	Ø 20,64	Alu, -ABS, RHD
	94-01				**PF250**	Del(EP)	Ø 20,64	Alu, +ABS, RHD
1.4 i 16v Eng.X14XE (66kW)	99-01		R		**CF074**		Ø 19,05	
	99-01		R		**CF185**		Ø 19,05	Alu
	99-01				**PF038**	Del(EB)	Ø 20,64	Alu, -ABS, LHD
	99-01				**PF193**	Del(EL)	Ø 20,64	Alu, +ABS, LHD
1.4 Si Eng.C14SE (60kW)	93-97		R		**CF154**		Ø 19,05	
	93-97				**PF038**	Del(EB)	Ø 20,64	Alu, -ABS, LHD
	93-97				**PF193**	Del(EL)	Ø 20,64	Alu, +ABS, LHD
	93-97				**PF249**	Del(EM)	Ø 20,64	Alu, -ABS, RHD
	93-97				**PF250**	Del(EP)	Ø 20,64	Alu, +ABS, RHD
1.6 Eng.C16SEL (74kW)	1/94-12/96		R		**CF074**		Ø 19,05	
	1/94-12/96		R		**CF185**		Ø 19,05	Alu
1.7 D Eng.17D(4EE1)/ X17D (44kW)	7/94-		R		**CF154**		Ø 19,05	
	7/94-				**PF038**	Del(EB)	Ø 20,64	Alu, -ABS, LHD
	7/94-				**PF193**	Del(EL)	Ø 20,64	Alu, +ABS, LHD
	7/94-				**PF249**	Del(EM)	Ø 20,64	Alu, -ABS, RHD

OPEL LCV

		Spare Parts	F/R	L/R	FRITECH ref.		DIMENSIONS mm.	NOTE
1.7 D Eng.17D(4EE1)/ X17D (44kW)	7/94-				**PF250**	Del(EP)	Ø 20,64	Alu, +ABS, RHD
Combo II 10/01-10/11								
1.3 CDTi 16v Eng.Z13DT/ Y13DT (51kW)	04-		R		**CF185**		Ø 19,05	Alu
					PF800	Bch	Ø 22,20	Ch 43000001-, Alu, Rear Disc Brake, +/-ABS, -ESP
	04-				**PF660**	Bch	Ø 23,81	Alu, Rear Disc Brake, +ABS, +ESP
	04-				**PF659**	Bch	Ø 23,80	Alu, Rear Disc Brake, +ABS, -ESP
	06-				**PF110**	Del(BE)	Ø 20,64	+BFR
	04-				**PZ117**	Fte	Ø 15,87	Pla
1.3 CDTi 16v Eng.Z13DTJ (55kW)	06-		R		**CF185**		Ø 19,05	Alu
					PF800	Bch	Ø 22,20	Ch 43000001-, Alu, Rear Disc Brake, +/-ABS, -ESP
	06-				**PF110**	Del(BE)	Ø 20,64	+BFR
	05-				**PZ117**	Fte	Ø 15,87	Pla, M/T, LHD
1.4 16v Eng.Z14XEP (66kW)	04-		R		**CF185**		Ø 19,05	Alu
					PF800	Bch	Ø 22,20	Ch 43000001-, Alu, Rear Disc Brake, +/-ABS, -ESP
	04-				**PF660**	Bch	Ø 23,81	Alu, Rear Disc Brake, +ABS, +ESP
	04-				**PF659**	Bch	Ø 23,80	Alu, Rear Disc Brake, +ABS, -ESP
	04-				**PF110**	Del(BE)	Ø 20,64	+BFR
	04-				**PZ117**	Fte	Ø 15,87	Pla
1.6 Eng.Z16SE (62-64kW)	01-		R		**CF185**		Ø 19,05	Alu
					PF800	Bch	Ø 22,20	Ch 43000001-, Alu, Rear Disc Brake, +/-ABS, -ESP
	06-				**PF110**	Del(BE)	Ø 20,64	+BFR
	01-				**PZ117**	Fte	Ø 15,87	Pla
1.6 16v Eng.Z16YNG (69kW)	06-				**PZ117**	Fte	Ø 15,87	Pla, LHD
1.7 CDTi Eng.Z17DTH (74kW)	01-				**PZ117**	Fte	Ø 15,87	Pla, LHD
1.7 Di 16v Eng.Y17DTL (48kW)	01-		R		**CF185**		Ø 19,05	Alu
					PF800	Bch	Ø 22,20	Ch 43000001-, Alu, Rear Disc Brake, +/-ABS, -ESP
	05-				**PF110**	Del(BE)	Ø 20,64	+BFR
	01-				**PZ117**	Fte	Ø 15,87	Pla
1.7 DTI 16v Eng.Y17DT (55kW)	01-		R		**CF185**		Ø 19,05	Alu
					PF800	Bch	Ø 22,20	Ch 43000001-, Alu, Rear Disc Brake, +/-ABS, -ESP
	06-				**PF110**	Del(BE)	Ø 20,64	+BFR
	01-				**PZ117**	Fte	Ø 15,87	Pla
Combo III (X12) 11/11-								
1.3 CDTi Eng.Z13DTH/ A13FD (66kW)	11-		R		**CF827**	Loc	Ø 20,64	Alu, Mod. Van
	11-				**PF913**	Bch	Ø 23,81	Alu, +ABS, +ESP
	11-				**PF912**	Bch	Ø 23,81	Alu, +ABS, -ESP
	11-				**PZ146**	Fte	Ø 15,87	Alu
1.4 Eng.A14FP (70kW)	11-		R		**CF865**	Loc	Ø 25,40	Alu
	11-				**PF913**	Bch	Ø 23,81	Alu, +ABS, +ESP
	11-				**PF912**	Bch	Ø 23,81	Alu, +ABS, -ESP
	11-				**PZ146**	Fte	Ø 15,87	Alu
1.4 CNG Eng.A14FC (88kW)	11-		R		**CF865**	Loc	Ø 25,40	Alu
	11-				**PF913**	Bch	Ø 23,81	Alu, +ABS, +ESP
	11-				**PF912**	Bch	Ø 23,81	Alu, +ABS, -ESP
	11-				**PZ146**	Fte	Ø 15,87	Alu
1.6 CDTi Eng.A16FDH (74kW)	12-		R		**CF827**	Loc	Ø 20,64	Alu, Mod. Van
	12-				**PF913**	Bch	Ø 23,81	Alu, +ABS, +ESP, M/T+A/T
	12-				**PF912**	Bch	Ø 23,81	Alu, +ABS, -ESP, M/T+A/T
	12-				**PZ146**	Fte	Ø 15,87	Alu
1.6 CDTi Eng.A16FDH (77kW)	11-		R		**CF827**	Loc	Ø 20,64	Alu, Mod. Van
1.6 CDTi Eng.A16FDL (66kW)	11-		R		**CF827**	Loc	Ø 20,64	Alu, Mod. Van
	11-				**PF913**	Bch	Ø 23,81	Alu, +ABS, +ESP, M/T+A/T
	11-				**PF912**	Bch	Ø 23,81	Alu, +ABS, -ESP, M/T+A/T
	11-				**PZ146**	Fte	Ø 15,87	Alu
2.0 CDTi Eng.A20FD (99kW)	11-		R		**CF865**	Loc	Ø 25,40	Alu
	11-				**PF913**	Bch	Ø 23,81	Alu, +ABS, +ESP
	11-				**PF912**	Bch	Ø 23,81	Alu, +ABS, -ESP
	11-				**PZ146**	Fte	Ø 15,87	Alu

		Spare Parts	F/R	L/R	FRITECH ref.		DIMENSIONS mm.	NOTE
Corsa A Van / Nova Van 2/86-1/94								
1.0 Eng.10S (33kW)			R		**CF044**		Ø 14,28	Ch -G4000000
			R		**CF105**		Ø 14,28	Ch G400001-
			R		**CF008**		Ø 17,46	Ch -G4000000, HDB
			R		**CF009**		Ø 17,46	Ch G400001-, HDB
	86-89				**PF159**	Del(AL)	Ø 20,64	+Servo
	86-89				**PF167**	Del(AX)	Ø 20,64	Alu, +Servo
	86-				**PF162**	Del(CS,DD)	Ø 20,64	Ch -J4000000, Alu, +Servo
1.2 Eng.12NC/ E12GV (33kW)			R		**CF008**		Ø 17,46	Ch -G4000000
			R		**CF009**		Ø 17,46	Ch G4000001-
	86-89				**PF159**	Del(AL)	Ø 20,64	+Servo
	86-89				**PF167**	Del(AX)	Ø 20,64	Alu, +Servo
	86-				**PF162**	Del(CS,DD)	Ø 20,64	Ch -J4000000, Alu, +Servo
1.2 Eng.12ST (40kW)			R		**CF008**		Ø 17,46	Ch -G4000000
			R		**CF009**		Ø 17,46	Ch G4000001-
	86-89				**PF159**	Del(AL)	Ø 20,64	+Servo
	86-89				**PF167**	Del(AX)	Ø 20,64	Alu, +Servo
	86-				**PF162**	Del(CS,DD)	Ø 20,64	Ch -J4000000, Alu, +Servo
1.3 Eng.13NB (44kW)			R		**CF008**		Ø 17,46	Ch -G4000000
			R		**CF009**		Ø 17,46	Ch G4000001-
	86-89				**PF159**	Del(AL)	Ø 20,64	+Servo
	86-89				**PF167**	Del(AX)	Ø 20,64	Alu, +Servo
	86-				**PF162**	Del(CS,DD)	Ø 20,64	Ch -J4000000, Alu, +Servo
1.3 Eng.13SB (51kW)			R		**CF008**		Ø 17,46	Ch -G4000000
			R		**CF009**		Ø 17,46	Ch G4000001-
	86-89				**PF159**	Del(AL)	Ø 20,64	+Servo
	86-89				**PF167**	Del(AX)	Ø 20,64	Alu, +Servo
	86-				**PF162**	Del(CS,DD)	Ø 20,64	Ch -J4000000, Alu, +Servo
1.5 D Eng.15D(4EC1) (37kW)	87-89		R		**CF009**		Ø 17,46	HDB
	87-89				**PF159**	Del(AL)	Ø 20,64	+Servo
	87-89				**PF167**	Del(AX)	Ø 20,64	Alu, +Servo
	87-				**PF162**	Del(CS,DD)	Ø 20,64	Ch -J4000000, Alu, +Servo
Corsa B Van (73) / Corsa Van 8/99-9/00								
1.4 i Eng.X14SZ (44kW)	99-00		R		**CF074**		Ø 19,05	
	99-00		R		**CF185**		Ø 19,05	Alu
	99-00				**PF038**	Del(EB)	Ø 20,64	Alu, -ABS, LHD
	99-00				**PF193**	Del(EL)	Ø 20,64	Alu, +ABS, LHD
	99-00				**PF249**	Del(EM)	Ø 20,64	Alu, -ABS, RHD
	99-00				**PF250**	Del(EP)	Ø 20,64	Alu, +ABS, RHD
1.5 D Eng.15D (37kW)	94-95		R		**CF074**		Ø 19,05	
	94-95		R		**CF185**		Ø 19,05	Alu
	94-95				**PF038**	Del(EB)	Ø 20,64	Alu, -ABS, LHD
	94-95				**PF193**	Del(EL)	Ø 20,64	Alu, +ABS, LHD
	94-95				**PF249**	Del(EM)	Ø 20,64	Alu, -ABS, RHD
	94-95				**PF250**	Del(EP)	Ø 20,64	Alu, +ABS, RHD
1.7 D Eng.17D(4EE1)/ X17D (44kW)	99-00		R		**CF074**		Ø 19,05	
	99-00		R		**CF185**		Ø 19,05	Alu
	99-00				**PF038**	Del(EB)	Ø 20,64	Alu, -ABS, LHD
	99-00				**PF193**	Del(EL)	Ø 20,64	Alu, +ABS, LHD
	99-00				**PF249**	Del(EM)	Ø 20,64	Alu, -ABS, RHD
	99-00				**PF250**	Del(EP)	Ø 20,64	Alu, +ABS, RHD
Corsa C Van (F08, W5L) / Corsa II Van 9/00-6/06								
1.2 16v Eng.Z12XE (55kW)	9/00-		R		**CF185**		Ø 19,05	Alu
					PF800	Bch	Ø 22,20	Ch 43000001-, Alu, Rear Disc Brake, +/-ABS, -ESP
					PF660	Bch	Ø 23,81	Ch 43000001-, Alu, Rear Disc Brake, +ABS, +ESP
					PF659	Bch	Ø 23,80	Ch 43000001-, Alu, Rear Disc Brake, +ABS, -ESP
					PF110	Del(BE)	Ø 20,64	Ch 43000001-, +BFR, Rear Drum Brake, +ABS, -ESP
					PF658		Ø 22,20	Ch 43000001-, Alu, Rear Drum Brake, +ABS, +ESP
					PF281		Ø 22,20	Ch -36999999, Alu
	00-				**PZ117**	Fte	Ø 15,87	Pla, M/T
1.2 16v Eng.Z12XEP (59kW)	05-				**PZ117**	Fte	Ø 15,87	Pla, M/T, LHD

OPEL LCV

		Spare Parts	F/R	L/R	FRITECH ref.		DIMENSIONS mm.	NOTE
1.3 CDTi 16v Eng.Z13DT (51kW)	05-				**PZ117**	Fte	Ø 15,87	Pla, M/T, LHD
1.4 Eng.Z14XE (66kW)	03-		R		**CF074**		Ø 19,05	
	03-		R		**CF185**		Ø 19,05	Alu
					PF800	Bch	Ø 22,20	Ch 43000001-, Alu, Rear Disc Brake, +/-ABS, -ESP
					PF660	Bch	Ø 23,81	Ch 43000001-, Alu, Rear Disc Brake, +ABS, +ESP
					PF659	Bch	Ø 23,80	Ch 43000001-, Alu, Rear Disc Brake, +ABS, -ESP
					PF110	Del(BE)	Ø 20,64	Ch 43000001-, +BFR, Rear Drum Brake, +ABS, -ESP
					PF658		Ø 22,20	Ch 43000001-, Alu, Rear Drum Brake, +ABS, +ESP
					PF281		Ø 22,20	Ch -36999999, Alu
	03-				**PZ117**	Fte	Ø 15,87	Pla, LHD
1.7 CDTi Eng.Z17DTH (74kW)	03-		R		**CF320**		Ø 20,64	Alu, -ABS
					PF800	Bch	Ø 22,20	Ch 43000001-, Alu, Rear Disc Brake, +/-ABS, -ESP
					PF660	Bch	Ø 23,81	Ch 43000001-, Alu, Rear Disc Brake, +ABS, +ESP
					PF659	Bch	Ø 23,80	Ch 43000001-, Alu, Rear Disc Brake, +ABS, -ESP
					PF110	Del(BE)	Ø 20,64	Ch 43000001-, +BFR, Rear Drum Brake, +ABS, -ESP
					PF658		Ø 22,20	Ch 43000001-, Alu, Rear Drum Brake, +ABS, +ESP
					PF281		Ø 22,20	Ch -36999999, Alu
	03-				**PZ117**	Fte	Ø 15,87	Pla
1.7 Di 16v Eng.Y17DTL (48kW)	9/00-		R		**CF185**		Ø 19,05	Alu
					PF800	Bch	Ø 22,20	Ch 43000001-, Alu, Rear Disc Brake, +/-ABS, -ESP
					PF660	Bch	Ø 23,81	Ch 43000001-, Alu, Rear Disc Brake, +ABS, +ESP
					PF659	Bch	Ø 23,80	Ch 43000001-, Alu, Rear Disc Brake, +ABS, -ESP
					PF110	Del(BE)	Ø 20,64	Ch 43000001-, +BFR, Rear Drum Brake, +ABS, -ESP
					PF658		Ø 22,20	Ch 43000001-, Alu, Rear Drum Brake, +ABS, +ESP
					PF281		Ø 22,20	Ch -36999999, Alu
	00-				**PZ117**	Fte	Ø 15,87	Pla
1.7 DTI 16v Eng.Y17DT (55kW)	9/00-		R		**CF185**		Ø 19,05	Alu
					PF800	Bch	Ø 22,20	Ch 43000001-, Alu, Rear Disc Brake, +/-ABS, -ESP
					PF660	Bch	Ø 23,81	Ch 43000001-, Alu, Rear Disc Brake, +ABS, +ESP
					PF659	Bch	Ø 23,80	Ch 43000001-, Alu, Rear Disc Brake, +ABS, -ESP
					PF110	Del(BE)	Ø 20,64	Ch 43000001-, +BFR, Rear Drum Brake, +ABS, -ESP
					PF658		Ø 22,20	Ch 43000001-, Alu, Rear Drum Brake, +ABS, +ESP
					PF281		Ø 22,20	Ch -36999999, Alu
	00-				**PZ117**	Fte	Ø 15,87	Pla
Kadett E Van / Astra E Van 8/84-7/94								
1.6 Eng.16SH (66kW)	89-94		R		**CF008**		Ø 17,46	Ch -G5000000
1.6 Eng.16SV (60kW)	89-94		R		**CF008**		Ø 17,46	Ch -G5000000
1.6 D Eng.16D/ 16DA (40kW)	84-89		R		**CF155**		Ø 17,46	SW
	84-89				**PF164**	Del(CN,CZ)	Ø 20,64	Alu, SW
1.6 i Eng.C16NZ (55kW)	89-94		R		**CF008**		Ø 17,46	Ch -G5000000
1.7 D Eng.17D/ DR (42-44kW)	89-94		R		**CF008**		Ø 17,46	Ch -G5000000
Movano I 7/98-6/10								
1.9 DTi Eng.F9Q770/ 774 (59-60kW)	00-		R	L	**CF325**		Ø 23,81	
	00-		R	R	**CF326**		Ø 23,81	
	03-				**PF806**	Bch	Ø 23,81	Alu, +ABS
	00-03				**PF503**	Bch	Ø 25,40	Alu, +ABS
	00-				**PF502**	Bch	Ø 25,40	Alu, -ABS
2.2 DTi Eng.G9T720 (66kW)	00-		R	L	**CF325**		Ø 23,81	
	00-		R	R	**CF326**		Ø 23,81	
	03-				**PF806**	Bch	Ø 23,81	Alu, +ABS
	00-03				**PF503**	Bch	Ø 25,40	Alu, +ABS
	00-				**PF502**	Bch	Ø 25,40	Alu, -ABS
2.5 CDTi Eng.G9U632 (107kW)	06-10		R	L	**CF325**		Ø 23,81	
	06-10		R	R	**CF326**		Ø 23,81	
	06-				**PF806**	Bch	Ø 23,81	Alu, +ABS
	06-				**PF502**	Bch	Ø 25,40	Alu, -ABS

		Spare Parts	F/R	L/R	FRITECH ref.		DIMENSIONS mm.	NOTE
2.5 CDTi Eng.G9U632 (88kW)	06-10		R	L	**CF325**		Ø 23,81	
	06-10		R	R	**CF326**		Ø 23,81	
	06-				**PF806**	Bch	Ø 23,81	Alu, +ABS
	06-				**PF502**	Bch	Ø 25,40	Alu, -ABS
2.5 CDTi Eng.G9U650 (74kW)	06-10		R	L	**CF325**		Ø 23,81	
	06-10		R	R	**CF326**		Ø 23,81	
	07-10				**PF806**	Bch	Ø 23,81	Alu, +ABS
	07-10				**PF502**	Bch	Ø 25,40	Alu, -ABS
2.5 D Eng.S8U770 (59kW)	99-		R	L	**CF325**		Ø 23,81	
	99-		R	R	**CF326**		Ø 23,81	
	03-				**PF806**	Bch	Ø 23,81	Alu, +ABS
	99-03				**PF503**	Bch	Ø 25,40	Alu, +ABS
	98-				**PF502**	Bch	Ø 25,40	Alu, -ABS
2.5 DTi Eng.G9U720/ 724/ 750/ 754 (84kW)	01-10		R	L	**CF325**		Ø 23,81	
	01-10		R	R	**CF326**		Ø 23,81	
	03-10				**PF806**	Bch	Ø 23,81	Alu, +ABS
	01-03				**PF503**	Bch	Ø 25,40	Alu, +ABS
	01-10				**PF502**	Bch	Ø 25,40	Alu, -ABS
2.5 DTi Eng.G9U754 (73kW)	07-10		R	L	**CF325**		Ø 23,81	
	07-10		R	R	**CF326**		Ø 23,81	
	07-10				**PF806**	Bch	Ø 23,81	Alu, +ABS
	07-10				**PF502**	Bch	Ø 25,40	Alu, -ABS
2.8 DTI Eng.S9W702 (84kW)	98-		R	L	**CF325**		Ø 23,81	
	98-		R	R	**CF326**		Ø 23,81	
	03-				**PF806**	Bch	Ø 23,81	Alu, +ABS
	98-03				**PF503**	Bch	Ø 25,40	Alu, +ABS
	98-				**PF502**	Bch	Ø 25,40	Alu, -ABS
3.0 CDTi Eng.ZD3A2 (100kW)	07-				**PF806**	Bch	Ø 23,81	Alu, +ABS
	07-				**PF502**	Bch	Ø 25,40	Alu, -ABS
Vivaro A 8/01-5/14								
1.9 Di Eng.F9Q774/ 762 (59-60kW)	06-				**PF978**	Trw	Ø 20,64	+ABS, -ESP
	01-				**PF622**	Trw	Ø 25,40	Alu, +ESP, +TC
	01-				**PF624**	Trw	Ø 20,64	Ch -4V602167, Alu, -ESP, -TC
	01-				**PF623**	Trw	Ø 20,64	Ch 4V602168-, Alu, -ESP, +TC
	01-				**PF620**	Trw	Ø 25,40	Ch -4V602167, Alu, -ESP, -TC
	01-				**PF621**	Trw	Ø 25,40	Ch 4V602168-, Alu, -ESP, -TC
1.9 DTI Eng.F9Q760 (74kW)	01-				**PF622**	Trw	Ø 25,40	Alu, +ESP, +TC
	01-				**PF624**	Trw	Ø 20,64	Ch -4V602167, Alu, -ESP, -TC
	01-				**PF623**	Trw	Ø 20,64	Ch 4V602168-, Alu, -ESP, +TC
	01-				**PF620**	Trw	Ø 25,40	Ch -4V602167, Alu, -ESP, -TC
	01-				**PF621**	Trw	Ø 25,40	Ch 4V602168-, Alu, -ESP, -TC
	01-				**PF979**		Ø 20,64	Ch 7V6000001-, +ABS, +ESP
	01-				**PF980**		Ø 20,64	Ch 7V6000001-, -ABS
2.0 16v Eng.F4R720 (88kW)	06-				**PF978**	Trw	Ø 20,64	+ABS, -ESP
	01-				**PF622**	Trw	Ø 25,40	Alu, +ESP, +TC
	01-				**PF624**	Trw	Ø 20,64	Ch -4V602167, Alu, -ESP, -TC
	01-				**PF623**	Trw	Ø 20,64	Ch 4V602168-, Alu, -ESP, +TC
	01-				**PF620**	Trw	Ø 25,40	Ch -4V602167, Alu, -ESP, -TC
	01-				**PF621**	Trw	Ø 25,40	Ch 4V602168-, Alu, -ESP, -TC
2.0 16v ECO Eng.F4R820 (86kW)	06-				**PF978**	Trw	Ø 20,64	+ABS, -ESP
	06-				**PF979**		Ø 20,64	Ch 7V6000001-, +ABS, +ESP
	06-				**PF980**		Ø 20,64	Ch 7V6000001-, -ABS
2.0 CDTi 120 Eng.M9R780 (84kW)	03-				**PF978**	Trw	Ø 20,64	+ABS, -ESP
	03-				**PF622**	Trw	Ø 25,40	Alu, +ESP, +TC
	03-				**PF624**	Trw	Ø 20,64	Ch -4V602167, Alu, -ESP, -TC
	03-				**PF623**	Trw	Ø 20,64	Ch 4V602168-, Alu, -ESP, +TC
	03-				**PF620**	Trw	Ø 25,40	Ch -4V602167, Alu, -ESP, -TC
	03-				**PF621**	Trw	Ø 25,40	Ch 4V602168-, Alu, -ESP, -TC
	03-				**PF979**		Ø 20,64	Ch 7V6000001-, +ABS, +ESP
	03-				**PF980**		Ø 20,64	Ch 7V6000001-, -ABS
2.0 CDTi 90 Eng.M9R.E7 (66kW)	03-				**PF978**	Trw	Ø 20,64	+ABS, -ESP
	03-				**PF622**	Trw	Ø 25,40	Alu, +ESP, +TC
	03-				**PF624**	Trw	Ø 20,64	Ch -4V602167, Alu, -ESP, -TC
	03-				**PF623**	Trw	Ø 20,64	Ch 4V602168-, Alu, -ESP, +TC

OPEL LCV

		Spare Parts	F/R	L/R	FRITECH ref.		DIMENSIONS mm.	NOTE
2.0 CDTi 90 Eng.M9R.E7 (66kW)	03-				**PF620**	Trw	Ø 25,40	Ch -4V602167, Alu, -ESP, -TC
	03-				**PF621**	Trw	Ø 25,40	Ch 4V602168-, Alu, -ESP, -TC
	03-				**PF979**		Ø 20,64	Ch 7V6000001-, +ABS, +ESP
	03-				**PF980**		Ø 20,64	Ch 7V6000001-, -ABS
2.5 CDTI Eng.G9U630 (107kW)	06-				**PF978**	Trw	Ø 20,64	+ABS, -ESP
	06-				**PF979**		Ø 20,64	Ch 7V6000001-, +ABS, +ESP
	06-				**PF980**		Ø 20,64	Ch 7V6000001-, -ABS
2.5 CDTi Eng.G9U720 (84kW)	06-				**PF978**	Trw	Ø 20,64	+ABS, -ESP
	06-				**PF622**	Trw	Ø 25,40	Alu, +ESP, +TC
	06-				**PF623**	Trw	Ø 20,64	Ch 4V602168-, Alu, -ESP, +TC
	06-				**PF620**	Trw	Ø 25,40	Ch -4V602167, Alu, -ESP, -TC
	06-				**PF621**	Trw	Ø 25,40	Ch 4V602168-, Alu, -ESP, -TC
	06-				**PF979**		Ø 20,64	Ch 7V6000001-, +ABS, +ESP
	06-				**PF980**		Ø 20,64	Ch 7V6000001-, -ABS
2.5 DCi 150 Eng.G9U630 (108kW)	03-				**PF622**	Trw	Ø 25,40	Alu, +ESP, +TC
	03-				**PF624**	Trw	Ø 20,64	Ch -4V602167, Alu, -ESP, -TC
	03-				**PF623**	Trw	Ø 20,64	Ch 4V602168-, Alu, -ESP, +TC
	03-				**PF620**	Trw	Ø 25,40	Ch -4V602167, Alu, -ESP, -TC
	03-				**PF621**	Trw	Ø 25,40	Ch 4V602168-, Alu, -ESP, -TC
2.5 DTI Eng.G9U730 (99kW)	03-				**PF622**	Trw	Ø 25,40	Alu, +ESP, +TC
	03-				**PF624**	Trw	Ø 20,64	Ch -4V602167, Alu, -ESP, -TC
	03-				**PF623**	Trw	Ø 20,64	Ch 4V602168-, Alu, -ESP, +TC
	03-				**PF620**	Trw	Ø 25,40	Ch -4V602167, Alu, -ESP, -TC
	03-				**PF621**	Trw	Ø 25,40	Ch 4V602168-, Alu, -ESP, -TC

PEUGEOT

1007 (KM) 4/05-12/10								
1.4 Eng.KFV(TU3JP) (55kW)	4/05-		R		**CF801**	Bch	Ø 20,64	Alu, +ABS
	4/05-		R		**CF162**	Luc	Ø 20,64	Alu, +ABS
	4/05-				**PF506**	Luc	Ø 22,20	Alu, +ABS, +ESP
1.4 16v Eng.KFU(ET3J4) (65kW)	05-		R		**CF801**	Bch	Ø 20,64	Alu, +ABS
	05-		R		**CF162**	Luc	Ø 20,64	Alu, +ABS
	05-				**PF625**	Bch	Ø 22,20	Alu, +ABS
	05-				**PF506**	Luc	Ø 22,20	Alu, +ABS, +ESP
	05-				**PF507**	Luc	Ø 22,20	Alu, +ABS, -ESP
	05-				**PF508**	Luc	Ø 20,64	Alu, -ABS
1.4 HDi Eng.8HX/8HZ(DV4TD) (50kW)	4/05-		R		**CF801**	Bch	Ø 20,64	Alu, +ABS
	4/05-		R		**CF162**	Luc	Ø 20,64	Alu, +ABS
	4/05-				**PF506**	Luc	Ø 22,20	Alu, +ABS, +ESP
1.6 16v Eng.NFU(TU5JP4) (80kW)	4/05-				**PF506**	Luc	Ø 22,20	Alu, +ABS, +ESP
1.6 HDi 16v FAP Eng.9HZ(DV6TED4) (80kW)	07-				**PF625**	Bch	Ø 22,20	Alu, Servo Bosch
	07-				**PF792**	Trw	Ø 22,20	Alu, Servo Ate
104 10/72-6/88								
0.95 Eng.108C(XV8) (32kW)	83-88		R	L	**CF117**	Bdx	Ø 23,80	Ch -5315632
	83-88		R	R	**CF118**	Bdx	Ø 23,80	Ch -5315632
	83-88		R		**CF031**	Bdx	Ø 22,00	
	83-88		R		**CF056**	Luc	Ø 22,00	
	83-88				**PF082**		Ø 19,05	
0.95, Coupe Eng.108(XV3/ 5) (32-33-34kW)	7/75-9/76		R	L	**CF114**	Bdx	Ø 23,80	
	72-83		R	L	**CF117**	Bdx	Ø 23,80	
	7/75-9/76		R	L	**CF012**	Luc	Ø 22,22	
	7/75-9/76		R	R	**CF115**	Bdx	Ø 23,80	
	72-83		R	R	**CF118**	Bdx	Ø 23,80	
	7/75-9/76		R	R	**CF013**	Luc	Ø 22,22	
	9/76-83		R		**CF031**	Bdx	Ø 22,00	
	9/76-83		R		**CF056**	Luc	Ø 22,00	
	7/75-9/80				**PF080**		Ø 19,05	
	9/80-83				**PF082**		Ø 19,05	
1.1, Coupe Eng.109(XW3) (42kW)	76-83		R	L	**CF117**	Bdx	Ø 23,80	Ch -5315632
	76-83		R	R	**CF118**	Bdx	Ø 23,80	Ch -5315632
1.1, Coupe Eng.109F(XW3/ 7) (37-42-49kW)	79-88		R	L	**CF117**	Bdx	Ø 23,80	Ch -5315632
	79-88		R	R	**CF118**	Bdx	Ø 23,80	Ch -5315632
1.1, Coupe Eng.121(XW3S) (48-49kW)	7/75-9/76		R	L	**CF114**	Bdx	Ø 23,80	
	7/75-9/76		R	L	**CF012**	Luc	Ø 22,22	

		Spare Parts	F/R	L/R	FRITECH ref.		DIMENSIONS mm.	NOTE
1.1, Coupe Eng.121(XW3S) (48-49kW)	7/75-9/76		R	R	**CF115**	Bdx	Ø 23,80	
	7/75-9/76		R	R	**CF013**	Luc	Ø 22,22	
			R		**CF018**	Bdx	Ø 20,64	Ch 7236001-7241000, Sys.Front Citroen
	9/76-80		R		**CF031**	Bdx	Ø 22,00	
			R		**CF426**	Luc	Ø 20,64	Ch 7236001-7241000
	9/76-80		R		**CF056**	Luc	Ø 22,00	
					PF085	Bdx	Ø 17,46	Ch 7236001-7241000
	7/75-9/80				**PF080**		Ø 19,05	
1.2 Eng.129(XZ5) (42-49kW)	79-83		R	L	**CF117**	Bdx	Ø 23,80	Ch -5315632
	79-83		R	R	**CF118**	Bdx	Ø 23,80	Ch -5315632
	79-83		R		**CF031**	Bdx	Ø 22,00	
	79-83		R		**CF056**	Luc	Ø 22,00	
	79-83				**PF082**		Ø 19,05	
1.4, Coupe Eng.150(XY6B) (44-53kW)	79-84		R	L	**CF117**	Bdx	Ø 23,80	Ch -5315632
	79-84		R	R	**CF118**	Bdx	Ø 23,80	Ch -5315632
	79-84		R		**CF031**	Bdx	Ø 22,00	
	79-84		R		**CF056**	Luc	Ø 22,00	
	8/79-9/80				**PF080**		Ø 19,05	
	9/80-84				**PF082**		Ø 19,05	
106 I (1A, 1C) 9/91-4/96								
0.95 Eng.CDY(TU9) (33kW)	9/91-96		R	L	**CF077**	Bdx	Ø 19,05	CRCI, -ABS, 3 Hole
	9/91-96		R	L	**CF083**	Bdx	Ø 19,05	CRCI, Enterprise, -ABS, 4 Hole
	9/91-96		R	R	**CF078**	Bdx	Ø 19,05	CRCI, -ABS, 3 Hole
	9/91-96		R	R	**CF084**	Bdx	Ø 19,05	CRCI, Enterprise, -ABS, 4 Hole
	9/91-96		R		**CF102**	Bdx	Ø 19,05	+ABS
	9/91-96				**PF008**	Ate	Ø 19,00	-ABS, IP
	9/91-96				**PF007**	Ate	Ø 20,64	-ABS
	9/91-96				**PF131**	Bdx	Ø 20,64	+ABS
1.1 Eng.HDY(TU1M) (40kW)	9/91-96		R	L	**CF083**	Bdx	Ø 19,05	CRCI, 4 Hole
	9/91-96		R	R	**CF084**	Bdx	Ø 19,05	CRCI, 4 Hole
	9/91-96				**PF008**	Ate	Ø 19,00	-ABS
1.1 Eng.HDZ(TU1MZ) (44kW)	9/91-96		R	L	**CF077**	Bdx	Ø 19,05	CRCI, -ABS, 3 Hole
	9/91-96		R	L	**CF083**	Bdx	Ø 19,05	CRCI, Rallye, -ABS, 4 Hole
	9/91-96		R	R	**CF078**	Bdx	Ø 19,05	CRCI, -ABS, 3 Hole
	9/91-96		R	R	**CF084**	Bdx	Ø 19,05	CRCI, Rallye, -ABS, 4 Hole
	9/91-96		R		**CF102**	Bdx	Ø 19,05	+ABS
	9/91-96				**PF008**	Ate	Ø 19,00	-ABS, IP
	9/91-96				**PF007**	Ate	Ø 20,64	-ABS
	9/91-96				**PF131**	Bdx	Ø 20,64	+ABS
1.3 Eng.TU2J2/ TU3FJ2K (70-72kW)	93-96		R	L	**CF083**	Bdx	Ø 19,05	CRCI, -ABS, 4 Hole
	93-96		R	R	**CF084**	Bdx	Ø 19,05	CRCI, -ABS, 4 Hole
	93-96		R		**CF102**	Bdx	Ø 19,05	+ABS
	93-96				**PF007**	Ate	Ø 20,64	-ABS
	93-96				**PF131**	Bdx	Ø 20,64	+ABS
1.4 Eng.KDY/ KDZ/KDX(TU3A/ AN/ S/ M/ 2/ 2K/ MC/ F2) (47-55kW)	9/91-96		R	L	**CF083**	Bdx	Ø 19,05	CRCI, -ABS, 4 Hole
	9/91-96		R	R	**CF084**	Bdx	Ø 19,05	CRCI, -ABS, 4 Hole
	9/91-96		R		**CF102**	Bdx	Ø 19,05	+ABS
	9/91-96				**PF008**	Ate	Ø 19,00	-ABS
	9/91-96				**PF131**	Bdx	Ø 20,64	+ABS
1.4 Eng.KFZ(TU3J2-Z) (69kW)	9/91-96		R	L	**CF083**	Bdx	Ø 19,05	CRCI, -ABS, 4 Hole
	9/91-96		R	R	**CF084**	Bdx	Ø 19,05	CRCI, -ABS, 4 Hole
	9/91-96		R		**CF102**	Bdx	Ø 19,05	+ABS
	9/91-96				**PF007**	Ate	Ø 20,64	-ABS
1.4 Eng.NFZ(TU5JP) (65kW)	9/91-96		R	L	**CF083**	Bdx	Ø 19,05	CRCI, 4 Hole
	9/91-96		R	R	**CF084**	Bdx	Ø 19,05	CRCI, 4 Hole
	9/91-96				**PF007**	Ate	Ø 20,64	
1.4 D Eng.K9Y(TUD3Y) (37kW)	92-96		R	L	**CF083**	Bdx	Ø 19,05	CRCI, -ABS, 4 Hole
	92-96		R	R	**CF084**	Bdx	Ø 19,05	CRCI, -ABS, 4 Hole
	92-96		R		**CF102**	Bdx	Ø 19,05	+ABS
	92-96				**PF008**	Ate	Ø 19,00	-ABS
	92-96				**PF131**	Bdx	Ø 20,64	+ABS
1.5 D Eng.VJX(TUD5B) (43kW)	94-96		R	L	**CF083**	Bdx	Ø 19,05	CRCI, -ABS, 4 Hole
	94-96		R	R	**CF084**	Bdx	Ø 19,05	CRCI, -ABS, 4 Hole
	94-96		R		**CF102**	Bdx	Ø 19,05	+ABS

PEUGEOT

		Spare Parts	F/R	L/R	FRITECH ref.		DIMENSIONS mm.	NOTE
1.5 D Eng.VJX(TUD5B) (43kW)	94-96				**PF008**	Ate	Ø 19,00	-ABS
	94-96				**PF131**	Bdx	Ø 20,64	+ABS
1.5 D Eng.VJY(TUD5) (40kW)	94-96		R	L	**CF083**	Bdx	Ø 19,05	CRCI, -ABS, 4 Hole
	94-96		R	R	**CF084**	Bdx	Ø 19,05	CRCI, -ABS, 4 Hole
	94-96		R		**CF102**	Bdx	Ø 19,05	+ABS
	94-96				**PF008**	Ate	Ø 19,00	-ABS
	94-96				**PF131**	Bdx	Ø 20,64	+ABS
1.6 Eng.NFY(TU5J2) (76kW)	94-96		R	L	**CF083**	Bdx	Ø 19,05	CRCI, -ABS, 4 Hole
	94-96		R	R	**CF084**	Bdx	Ø 19,05	CRCI, -ABS, 4 Hole
	94-96		R		**CF102**	Bdx	Ø 19,05	+ABS
	94-96				**PF007**	Ate	Ø 20,64	-ABS
1.6 Eng.NFZ(TU5JP) (65kW)	93-96		R	L	**CF083**	Bdx	Ø 19,05	CRCI, -ABS, 4 Hole
	93-96		R	R	**CF084**	Bdx	Ø 19,05	CRCI, -ABS, 4 Hole
	93-96		R		**CF102**	Bdx	Ø 19,05	+ABS
	93-96				**PF008**	Ate	Ø 19,00	-ABS
	93-96				**PF131**	Bdx	Ø 20,64	+ABS
106 II (1) 5/96-7/04								
0.95 Eng.CDY/ Z(TU9M) (33-37kW)	96-		R	L	**CF077**	Bdx	Ø 19,05	CRCI, Sys.Front ATE, -ABS, 3 Hole
	96-		R	L	**CF083**	Bdx	Ø 19,05	CRCI, Sys.Front Bdx, -ABS, 4 Hole
	96-		R	R	**CF078**	Bdx	Ø 19,05	CRCI, Sys.Front ATE, -ABS, 3 Hole
	96-		R	R	**CF084**	Bdx	Ø 19,05	CRCI, Sys.Front Bdx, -ABS, 4 Hole
	11/98-		R		**CF162**	Luc	Ø 20,64	Alu, +ABS
	96-10/98		R		**CF159**	Luc	Ø 20,64	+ABS
	96-				**PF270**	Ate	Ø 20,64	Alu, -ABS, 3 Hole
	3/96-				**PF227**	Bdx	Ø 19,05	-ABS, 4 Hole
	96-				**PF213**	Bdx	Ø 20,64	Alu, -ABS, 3 Hole
	96-				**PF266**	Luc	Ø 20,64	Alu, +ABS
1.1 Eng.HDY(TU1M) (40kW)	97-		R	L	**CF077**	Bdx	Ø 19,05	CRCI, Sys.Front ATE, -ABS, 3 Hole
	97-		R	L	**CF083**	Bdx	Ø 19,05	CRCI, Sys.Front Bdx, -ABS, 4 Hole
	97-		R	R	**CF078**	Bdx	Ø 19,05	CRCI, Sys.Front ATE, -ABS, 3 Hole
	97-		R	R	**CF084**	Bdx	Ø 19,05	CRCI, Sys.Front Bdx, -ABS, 4 Hole
	97-				**PF270**	Ate	Ø 20,64	Alu, -ABS, 3 Hole
	97-				**PF227**	Bdx	Ø 19,05	-ABS, 4 Hole
	97-				**PF213**	Bdx	Ø 20,64	Alu, -ABS, 3 Hole
1.1 Eng.HFX(TU1JP) (44kW)	96-		R	L	**CF077**	Bdx	Ø 19,05	CRCI, Sys.Front ATE, -ABS, 3 Hole
	96-		R	L	**CF083**	Bdx	Ø 19,05	CRCI, Sys.Front Bdx, -ABS, 4 Hole
	96-		R	R	**CF078**	Bdx	Ø 19,05	CRCI, Sys.Front ATE, -ABS, 3 Hole
	98-		R	R	**CF084**	Bdx	Ø 19,05	CRCI, Sys.Front Bdx, -ABS, 4 Hole
	11/98-		R		**CF162**	Luc	Ø 20,64	Alu, +ABS
	96-10/98		R		**CF159**	Luc	Ø 20,64	+ABS
	96-				**PF266**	Luc	Ø 20,64	Alu, +ABS
1.4 Eng.KFW/KFX(TU3JP) (55kW)	96-		R	L	**CF083**	Bdx	Ø 19,05	CRCI, -ABS
	96-		R	R	**CF084**	Bdx	Ø 19,05	CRCI, -ABS
	11/98-		R		**CF162**	Luc	Ø 20,64	Alu, +ABS
	96-10/98		R		**CF159**	Luc	Ø 20,64	+ABS
	96-				**PF270**	Ate	Ø 20,64	Alu, -ABS
	96-				**PF227**	Bdx	Ø 19,05	-ABS
	96-				**PF266**	Luc	Ø 20,64	Alu, +ABS
1.5 D Eng.VJY/ X(TUD5) (40-43kW)	96-		R	L	**CF083**	Bdx	Ø 19,05	CRCI, -ABS
	96-		R	R	**CF084**	Bdx	Ø 19,05	CRCI, -ABS
	11/98-		R		**CF162**	Luc	Ø 20,64	Alu, +ABS
	96-10/98		R		**CF159**	Luc	Ø 20,64	+ABS
	96-				**PF270**	Ate	Ø 20,64	Alu, -ABS
	96-				**PF227**	Bdx	Ø 19,05	-ABS
	96-				**PF266**	Luc	Ø 20,64	Alu, +ABS
1.6 Eng.NFW/ NFY(TU5J2) (74kW)	96-				**PF270**	Ate	Ø 20,64	Alu, -ABS
	96-				**PF213**	Bdx	Ø 20,64	Alu, -ABS
	96-				**PF266**	Luc	Ø 20,64	Alu, +ABS
1.6 Eng.NFZ(TU5JP) (65kW)	96-		R	L	**CF083**	Bdx	Ø 19,05	CRCI, -ABS
	96-		R	R	**CF084**	Bdx	Ø 19,05	CRCI, -ABS
	11/98-		R		**CF162**	Luc	Ø 20,64	Alu, +ABS
	96-10/98		R		**CF159**	Luc	Ø 20,64	+ABS
	96-				**PF270**	Ate	Ø 20,64	Alu, -ABS
	96-				**PF213**	Bdx	Ø 20,64	Alu, -ABS

		Spare Parts	F/R	L/R	FRITECH ref.		DIMENSIONS mm.	NOTE
1.6 Eng.NFZ(TU5JP) (65kW)	96-				**PF266**	Luc	Ø 20,64	Alu, +ABS
1.6 S16/Rallye Eng.NFX(TU5J4) (87kW)	96-04				**PF571**	Ate	Ø 22,20	Alu, +ABS
	96-				**PF270**	Ate	Ø 20,64	Alu, -ABS
	96-				**PF213**	Bdx	Ø 20,64	Alu, -ABS
	96-				**PF266**	Luc	Ø 20,64	Alu, +ABS
Electric (20kW)	3/96-		R		**CF102**	Bdx	Ø 19,05	
	3/96-				**PF213**	Bdx	Ø 20,64	Alu, 3 Hole
107 6/05-5/14								
1.0 Eng.1KRFE (50kW)	6/05-		R		**CF802**	Bch	Ø 17,46	Alu
	05-				**PF853**	Bch	Ø 20,64	Alu, -ESP
	05-				**PF794**		Ø 20,64	Alu, +ESP
1.4 HDi Eng.8HT(DV4TD) (40kW)	6/05-		R		**CF802**	Bch	Ø 17,46	Alu
	05-				**PF853**	Bch	Ø 20,64	Alu, -ESP
	05-				**PF794**		Ø 20,64	Alu, +ESP
108 6/14-								
1.0 VTi Eng.1KR (51kW)	14-		R		**CF1018**	Bch	Ø 17,46	Alu
1.2 VTi Eng.HM01 (60kW)	14-		R		**CF1018**	Bch	Ø 17,46	Alu
2008 5/13-								
1.2 VTi Eng.EB2F (60kW)	-7/13				**PF919**	Bch	Ø 23,81	Alu
	7/13-				**PF855**	Trw	Ø 23,81	Alu
204 10/65-10/77								
1.1 Eng.XK5 (40-43kW)	75-77		R		**CF019**	Bdx	Ø 23,81	
	75-77		R		**CF036**	Luc	Ø 22,00	
	75-77				**PF081**	Luc	Ø 19,05	
1.1, Cabrio Eng.XK (39kW)	65-69		R		**CF338**	Bdx	Ø 19,05	Incl. Export
1.1, Cabrio, Coupe, Break Eng.XK4 (40kW)	69-77		R		**CF338**	Bdx	Ø 19,05	Incl. Export
	75-77		R		**CF019**	Bdx	Ø 23,81	
	75-77		R		**CF036**	Luc	Ø 22,00	
	75-77				**PF081**	Luc	Ø 19,05	
1.2 D Break Eng.XLD (29kW)	68-73		R		**CF338**	Bdx	Ø 19,05	Incl. Export
1.4 D, Break Eng.XL4D (33kW)	73-75		R		**CF338**	Bdx	Ø 19,05	Incl. Export
	75-77		R		**CF019**	Bdx	Ø 23,81	
	75-77		R		**CF036**	Luc	Ø 22,00	
	75-77				**PF081**	Luc	Ø 19,05	
205 I (741A/C/B) 2/83-10/87								
0.95 Eng.108C(XV3/ 5/ 8) (32-33-34kW)	83-		R	L	**CF052**	Bdx	Ø 19,05	CRCI, +Servo
	83-90		R	L	**CF048**	Bdx	Ø 20,64	CRCI, -Servo
	83-		R	L	**CF050**	Luc	Ø 19,05	CRCI, +Servo
	83-		R	R	**CF053**	Bdx	Ø 19,05	CRCI, +Servo
	83-90		R	R	**CF049**	Bdx	Ø 20,64	CRCI, -Servo
	83-		R	R	**CF051**	Luc	Ø 19,05	CRCI, +Servo
	83-				**PF008**	Ate	Ø 19,00	-ABS, +Servo, 3 Connections
	83-				**PF169**	Ate	Ø 19,05	-ABS, +Servo, 4 Connections
	83-				**PF007**	Ate	Ø 20,64	-ABS, +Servo, 4 Connections
	83-				**PF194**	Ate	Ø 20,64	-ABS, +Servo
	8/86-87				**PF128**		Ø 17,46	-ABS, -Servo
	83-7/86				**PF021**		Ø 19,05	-ABS, -Servo
1.1 Eng.109F(XW7) (36kW)	83-		R	L	**CF052**	Bdx	Ø 19,05	CRCI, +Servo
	83-90		R	L	**CF048**	Bdx	Ø 20,64	CRCI, -Servo
	83-		R	L	**CF050**	Luc	Ø 19,05	CRCI, +Servo
	83-		R	R	**CF053**	Bdx	Ø 19,05	CRCI, +Servo
	83-90		R	R	**CF049**	Bdx	Ø 20,64	CRCI, -Servo
	83-		R	R	**CF051**	Luc	Ø 19,05	CRCI, +Servo
	83-				**PF008**	Ate	Ø 19,00	-ABS, +Servo, 3 Connections
	83-				**PF169**	Ate	Ø 19,05	-ABS, +Servo, 4 Connections
	83-				**PF007**	Ate	Ø 20,64	-ABS, +Servo, 4 Connections
	83-				**PF194**	Ate	Ø 20,64	-ABS, +Servo
	8/86-90				**PF128**		Ø 17,46	-ABS, -Servo
	83-7/86				**PF021**		Ø 19,05	-ABS, -Servo
1.1 Eng.109N(XW7) (36kW)	86-87		R	L	**CF052**	Bdx	Ø 19,05	CRCI, +Servo
	86-87		R	L	**CF048**	Bdx	Ø 20,64	CRCI, -Servo
	86-87		R	L	**CF050**	Luc	Ø 19,05	CRCI, +Servo
	86-87		R	R	**CF053**	Bdx	Ø 19,05	CRCI, +Servo
	86-87		R	R	**CF049**	Bdx	Ø 20,64	CRCI, -Servo

PEUGEOT

		Spare Parts	F/R	L/R	FRITECH ref.		DIMENSIONS mm.	NOTE
1.1 Eng.109N(XW7) (36kW)	86-87		R	R	**CF051**	Luc	Ø 19,05	CRCI, +Servo
	86-87				**PF008**	Ate	Ø 19,00	-ABS, +Servo, 3 Connections
	86-87				**PF169**	Ate	Ø 19,05	-ABS, +Servo, 4 Connections
	86-87				**PF007**	Ate	Ø 20,64	-ABS, +Servo, 4 Connections
	86-87				**PF194**	Ate	Ø 20,64	-ABS, +Servo
	86-87				**PF128**		Ø 17,46	-ABS, -Servo
1.4 Eng.150(XY6B) (44-53kW)	83-		R	L	**CF052**	Bdx	Ø 19,05	CRCI
	83-		R	L	**CF050**	Luc	Ø 19,05	CRCI
	83-		R	R	**CF053**	Bdx	Ø 19,05	CRCI
	83-		R	R	**CF051**	Luc	Ø 19,05	CRCI
	83-				**PF008**	Ate	Ø 19,00	-ABS, +Servo, 3 Connections
	83-				**PF169**	Ate	Ø 19,05	-ABS, +Servo, 4 Connections
	83-				**PF007**	Ate	Ø 20,64	-ABS, +Servo, 4 Connections
	83-				**PF194**	Ate	Ø 20,64	-ABS, +Servo
1.4, Cabrio Eng.150B/ H(XY8) (44-53-58kW)	83-		R	L	**CF052**	Bdx	Ø 19,05	CRCI
	83-		R	L	**CF050**	Luc	Ø 19,05	CRCI
	83-		R	R	**CF053**	Bdx	Ø 19,05	CRCI
	83-		R	R	**CF051**	Luc	Ø 19,05	CRCI
	83-				**PF008**	Ate	Ø 19,00	-ABS, +Servo, 3 Connections
	83-				**PF169**	Ate	Ø 19,05	-ABS, +Servo, 4 Connections
	83-				**PF007**	Ate	Ø 20,64	-ABS, +Servo, 4 Connections
	83-				**PF194**	Ate	Ø 20,64	-ABS, +Servo
1.4, Cabrio Eng.150D/ G(XY7) (44kW)	83-		R	L	**CF052**	Bdx	Ø 19,05	CRCI
	83-		R	L	**CF050**	Luc	Ø 19,05	CRCI
	83-		R	R	**CF053**	Bdx	Ø 19,05	CRCI
	83-		R	R	**CF051**	Luc	Ø 19,05	CRCI
	83-				**PF008**	Ate	Ø 19,00	-ABS, +Servo, 3 Connections
	83-				**PF169**	Ate	Ø 19,05	-ABS, +Servo, 4 Connections
	83-				**PF007**	Ate	Ø 20,64	-ABS, +Servo, 4 Connections
	83-				**PF194**	Ate	Ø 20,64	-ABS, +Servo
1.5 Eng.Y2-K (63kW)	84-87		R	L	**CF052**	Bdx	Ø 19,05	CRCI
	84-87		R	L	**CF050**	Luc	Ø 19,05	CRCI
	84-87		R	R	**CF053**	Bdx	Ø 19,05	CRCI
	84-87		R	R	**CF051**	Luc	Ø 19,05	CRCI
	84-87				**PF008**	Ate	Ø 19,00	-ABS, +Servo, 3 Connections
	84-87				**PF169**	Ate	Ø 19,05	-ABS, +Servo, 4 Connections
	84-87				**PF007**	Ate	Ø 20,64	-ABS, +Servo, 4 Connections
	84-87				**PF194**	Ate	Ø 20,64	-ABS, +Servo
1.6 Eng.B1A(XU51C) (55kW)	86-87		R	L	**CF052**	Bdx	Ø 19,05	CRCI
	86-87		R	L	**CF050**	Luc	Ø 19,05	CRCI
	86-87		R	R	**CF053**	Bdx	Ø 19,05	CRCI
	86-87		R	R	**CF051**	Luc	Ø 19,05	CRCI
	86-87				**PF008**	Ate	Ø 19,00	-ABS, +Servo, 3 Connections
	86-87				**PF169**	Ate	Ø 19,05	-ABS, +Servo, 4 Connections
	86-87				**PF007**	Ate	Ø 20,64	-ABS, +Servo, 4 Connections
	86-87				**PF194**	Ate	Ø 20,64	-ABS, +Servo
1.6 Eng.B1A/ BAZ(XU51C/ CP) (55-66-76-85kW)	86-87		R	L	**CF052**	Bdx	Ø 19,05	CRCI
	86-87		R	L	**CF050**	Luc	Ø 19,05	CRCI
	86-87		R	R	**CF053**	Bdx	Ø 19,05	CRCI
	86-87		R	R	**CF051**	Luc	Ø 19,05	CRCI
	86-87				**PF008**	Ate	Ø 19,00	-ABS, +Servo, 3 Connections
	86-87				**PF169**	Ate	Ø 19,05	-ABS, +Servo, 4 Connections
	86-87				**PF007**	Ate	Ø 20,64	-ABS, +Servo, 4 Connections
	86-87				**PF194**	Ate	Ø 20,64	-ABS, +Servo
1.6 Eng.B1E(XU51C) (53kW)	3/87-10/87		R	L	**CF052**	Bdx	Ø 19,05	CRCI
	3/87-10/87		R	L	**CF050**	Luc	Ø 19,05	CRCI
	3/87-10/87		R	R	**CF053**	Bdx	Ø 19,05	CRCI
	3/87-10/87		R	R	**CF051**	Luc	Ø 19,05	CRCI
	3/87-10/87				**PF008**	Ate	Ø 19,00	-ABS, +Servo, 3 Connections
	3/87-10/87				**PF169**	Ate	Ø 19,05	-ABS, +Servo, 4 Connections
	3/87-10/87				**PF007**	Ate	Ø 20,64	-ABS, +Servo, 4 Connections
	3/87-10/87				**PF194**	Ate	Ø 20,64	-ABS, +Servo

		Spare Parts	F/R	L/R	FRITECH ref.		DIMENSIONS mm.	NOTE
1.6 GTI, CTI Cabrio Eng.180A/ Z(XU5J-J/ JA/ JP)	84-87		R		**CF088**	Luc	Ø 19,05	
(76kW)	84-87				**PF007**	Ate	Ø 20,64	-ABS, +Servo, 4 Connections
	84-87				**PF194**	Ate	Ø 20,64	-ABS, +Servo, 3 Connections
1.8 D Eng.161A(XUD7) (44kW)	83-		R	L	**CF052**	Bdx	Ø 19,05	CRCI
	83-		R	L	**CF050**	Luc	Ø 19,05	CRCI
	83-		R	R	**CF053**	Bdx	Ø 19,05	CRCI
	83-		R	R	**CF051**	Luc	Ø 19,05	CRCI
	83-				**PF008**	Ate	Ø 19,00	-ABS, +Servo, 3 Connections
	83-				**PF169**	Ate	Ø 19,05	-ABS, +Servo, 4 Connections
	83-				**PF007**	Ate	Ø 20,64	-ABS, +Servo, 4 Connections
	83-				**PF194**	Ate	Ø 20,64	-ABS, +Servo
1.9 D Eng.DJZ(XUD9Y) (47kW)	83-		R	L	**CF052**	Bdx	Ø 19,05	CRCI
	83-		R	L	**CF050**	Luc	Ø 19,05	CRCI
	83-		R	R	**CF053**	Bdx	Ø 19,05	CRCI
	83-		R	R	**CF051**	Luc	Ø 19,05	CRCI
	83-				**PF008**	Ate	Ø 19,00	-ABS, +Servo, 3 Connections
	83-				**PF169**	Ate	Ø 19,05	+Servo, 4 Connections
	83-				**PF007**	Ate	Ø 20,64	+Servo, 4 Connections
	83-				**PF194**	Ate	Ø 20,64	+Servo
1.9 GTi, Cabrio Eng.D6B(XU9JA/ Z) (94-96kW)	86-87		R		**CF088**	Luc	Ø 19,05	
	86-87				**PF007**	Ate	Ø 20,64	-ABS, +Servo, 4 Connections
	86-87				**PF194**	Ate	Ø 20,64	-ABS, +Servo, 3 Connections
205 II (20A/C) 1/87-9/98								
0.95 Eng.CDY/ Z(TU9M) (33-37kW)	87-98		R	L	**CF052**	Bdx	Ø 19,05	CRCI, +Servo
	87-98		R	L	**CF050**	Luc	Ø 19,05	CRCI, +Servo
	87-98		R	R	**CF053**	Bdx	Ø 19,05	CRCI, +Servo
	87-98		R	R	**CF051**	Luc	Ø 19,05	CRCI, +Servo
	87-98				**PF008**	Ate	Ø 19,00	-ABS, +Servo, 3 Connections
	87-98				**PF169**	Ate	Ø 19,05	+Servo, 4 Connections
	87-98				**PF007**	Ate	Ø 20,64	+Servo, 4 Connections
	87-98				**PF194**	Ate	Ø 20,64	+Servo
	87-98				**PF131**	Bdx	Ø 20,64	+ABS, +Servo
1.1 Eng.109N(XW7) (36kW)	87-98		R	L	**CF052**	Bdx	Ø 19,05	CRCI, +Servo
	87-98		R	L	**CF050**	Luc	Ø 19,05	CRCI, +Servo
	87-98		R	R	**CF053**	Bdx	Ø 19,05	CRCI, +Servo
	87-98		R	R	**CF051**	Luc	Ø 19,05	CRCI, +Servo
	87-98				**PF008**	Ate	Ø 19,00	-ABS, +Servo, 3 Connections
	87-98				**PF169**	Ate	Ø 19,05	+Servo, 4 Connections
	87-98				**PF007**	Ate	Ø 20,64	+Servo, 4 Connections
	87-98				**PF194**	Ate	Ø 20,64	+Servo
	87-98				**PF131**	Bdx	Ø 20,64	+ABS, +Servo
1.1 Eng.H1B(TU1) (40kW)	87-90		R	L	**CF052**	Bdx	Ø 19,05	CRCI, +Servo
	87-90		R	L	**CF050**	Luc	Ø 19,05	CRCI, +Servo
	87-90		R	R	**CF053**	Bdx	Ø 19,05	CRCI, +Servo
	87-90		R	R	**CF051**	Luc	Ø 19,05	CRCI, +Servo
	87-90				**PF008**	Ate	Ø 19,00	-ABS, +Servo, 3 Connections
	87-90				**PF169**	Ate	Ø 19,05	+Servo, 4 Connections
	87-90				**PF007**	Ate	Ø 20,64	+Servo, 4 Connections
	87-90				**PF194**	Ate	Ø 20,64	+Servo
	87-90				**PF131**	Bdx	Ø 20,64	+ABS, +Servo
1.1, CJ Cabrio Eng.HDZ(TU1M/ MZ) (44kW)	89-94		R	L	**CF052**	Bdx	Ø 19,05	CRCI, +Servo
	89-94		R	L	**CF050**	Luc	Ø 19,05	CRCI, +Servo
	89-94		R	R	**CF053**	Bdx	Ø 19,05	CRCI, +Servo
	89-94		R	R	**CF051**	Luc	Ø 19,05	CRCI, +Servo
	89-94				**PF008**	Ate	Ø 19,00	-ABS, +Servo, 3 Connections
	89-94				**PF169**	Ate	Ø 19,05	+Servo, 4 Connections
	89-94				**PF007**	Ate	Ø 20,64	+Servo, 4 Connections
	89-94				**PF194**	Ate	Ø 20,64	+Servo
	89-94				**PF131**	Bdx	Ø 20,64	+ABS, +Servo
1.3 Rallye Eng.TU24 (74kW)	87-90		R		**CF088**	Luc	Ø 19,05	
	87-90				**PF007**	Ate	Ø 20,64	4 Connections
	87-90				**PF194**	Ate	Ø 20,64	3 Connections
1.4 Eng.150(XY6B) (44-53kW)	87-88		R	L	**CF052**	Bdx	Ø 19,05	CRCI, +Servo
	87-88		R	L	**CF050**	Luc	Ø 19,05	CRCI, +Servo

PEUGEOT

		Spare Parts	F/R	L/R	FRITECH ref.		DIMENSIONS mm.	NOTE
1.4 Eng.150(XY6B) (44-53kW)	87-88		R	R	**CF053**	Bdx	Ø 19,05	CRCI, +Servo
	87-88		R	R	**CF051**	Luc	Ø 19,05	CRCI, +Servo
	87-88				**PF008**	Ate	Ø 19,00	-ABS, +Servo, 3 Connections
	87-88				**PF169**	Ate	Ø 19,05	+Servo, 4 Connections
1.4 Eng.150B/ H(XY8) (44-53-58kW)	88-89		R	L	**CF052**	Bdx	Ø 19,05	CRCI, +Servo
	88-89		R	L	**CF050**	Luc	Ø 19,05	CRCI, +Servo
	88-89		R	R	**CF053**	Bdx	Ø 19,05	CRCI, +Servo
	88-89		R	R	**CF051**	Luc	Ø 19,05	CRCI, +Servo
	88-89				**PF008**	Ate	Ø 19,00	-ABS, +Servo, 3 Connections
	88-89				**PF169**	Ate	Ø 19,05	+Servo, 4 Connections
1.4 Eng.150D/ G(XY7) (44kW)	87-89		R	L	**CF052**	Bdx	Ø 19,05	CRCI, +Servo
	87-89		R	L	**CF050**	Luc	Ø 19,05	CRCI, +Servo
	87-89		R	R	**CF053**	Bdx	Ø 19,05	CRCI, +Servo
	87-89		R	R	**CF051**	Luc	Ø 19,05	CRCI, +Servo
	87-89				**PF008**	Ate	Ø 19,00	-ABS, +Servo, 3 Connections
	87-89				**PF169**	Ate	Ø 19,05	+Servo, 4 Connections
1.4 Eng.K2B(TU3S) (62kW)	87-89		R	L	**CF052**	Bdx	Ø 19,05	CRCI, +Servo
	87-89		R	L	**CF050**	Luc	Ø 19,05	CRCI, +Servo
	87-89		R	R	**CF053**	Bdx	Ø 19,05	CRCI, +Servo
	87-89		R	R	**CF051**	Luc	Ø 19,05	CRCI, +Servo
	87-89				**PF008**	Ate	Ø 19,00	-ABS, +Servo, 3 Connections
	87-89				**PF169**	Ate	Ø 19,05	+Servo, 4 Connections
	87-89				**PF007**	Ate	Ø 20,64	+Servo, 4 Connections
	87-89				**PF194**	Ate	Ø 20,64	+Servo
1.4, Cabrio Eng.K1D(TU3A/ AN/ S/ M/ 2/ 2K) (49kW)	87-94		R	L	**CF052**	Bdx	Ø 19,05	CRCI, +Servo
	87-94		R	L	**CF050**	Luc	Ø 19,05	CRCI, +Servo
	87-94		R	R	**CF053**	Bdx	Ø 19,05	CRCI, +Servo
	87-94		R	R	**CF051**	Luc	Ø 19,05	CRCI, +Servo
	87-94				**PF008**	Ate	Ø 19,00	-ABS, +Servo, 3 Connections
	87-94				**PF169**	Ate	Ø 19,05	+Servo, 4 Connections
	87-94				**PF007**	Ate	Ø 20,64	+Servo, 4 Connections
	87-94				**PF194**	Ate	Ø 20,64	+Servo
1.4, Cabrio Eng.KFW/ KFX(TU3JP)/ KDX(TU3MC) (55kW)	88-98		R	L	**CF052**	Bdx	Ø 19,05	CRCI, +Servo
	88-98		R	L	**CF050**	Luc	Ø 19,05	CRCI, +Servo
	88-98		R	R	**CF053**	Bdx	Ø 19,05	CRCI, +Servo
	88-98		R	R	**CF051**	Luc	Ø 19,05	CRCI, +Servo
	88-98				**PF008**	Ate	Ø 19,00	-ABS, +Servo, 3 Connections
	88-98				**PF169**	Ate	Ø 19,05	+Servo, 4 Connections
	88-98				**PF007**	Ate	Ø 20,64	+Servo, 4 Connections
	88-98				**PF194**	Ate	Ø 20,64	+Servo
1.4, Kat Cabrio Eng.KAY(TU3FCP) (44kW)	89-93		R	L	**CF052**	Bdx	Ø 19,05	CRCI, +Servo
	89-93		R	L	**CF050**	Luc	Ø 19,05	CRCI, +Servo
	89-93		R	R	**CF053**	Bdx	Ø 19,05	CRCI, +Servo
	89-93		R	R	**CF051**	Luc	Ø 19,05	CRCI, +Servo
	89-93				**PF008**	Ate	Ø 19,00	-ABS, +Servo, 3 Connections
	89-93				**PF169**	Ate	Ø 19,05	+Servo, 4 Connections
	89-93				**PF007**	Ate	Ø 20,64	+Servo, 4 Connections
	89-93				**PF194**	Ate	Ø 20,64	+Servo
1.6 Eng.B1E(XU51C) (53kW)	87-98		R	L	**CF052**	Bdx	Ø 19,05	CRCI, +Servo
	87-98		R	L	**CF050**	Luc	Ø 19,05	CRCI, +Servo
	87-98		R	R	**CF053**	Bdx	Ø 19,05	CRCI, +Servo
	87-98		R	R	**CF051**	Luc	Ø 19,05	CRCI, +Servo
	87-98				**PF008**	Ate	Ø 19,00	-ABS, +Servo, 3 Connections
	87-98				**PF169**	Ate	Ø 19,05	+Servo, 4 Connections
	87-98				**PF007**	Ate	Ø 20,64	+Servo, 4 Connections
	87-98				**PF194**	Ate	Ø 20,64	+Servo
	87-98				**PF131**	Bdx	Ø 20,64	+ABS, +Servo
1.6 Aut. Eng.B1A(XU51C-K) (58kW)	87-98		R	L	**CF052**	Bdx	Ø 19,05	CRCI, +Servo
	87-98		R	L	**CF050**	Luc	Ø 19,05	CRCI, +Servo
	87-98		R	R	**CF053**	Bdx	Ø 19,05	CRCI, +Servo
	87-98		R	R	**CF051**	Luc	Ø 19,05	CRCI, +Servo
	87-98				**PF008**	Ate	Ø 19,00	-ABS, +Servo, 3 Connections
	87-98				**PF169**	Ate	Ø 19,05	+Servo, 4 Connections
	87-98				**PF007**	Ate	Ø 20,64	+Servo, 4 Connections

		Spare Parts	F/R	L/R	FRITECH ref.		DIMENSIONS mm.	NOTE
1.6 Aut. Eng.B1A(XU51C-K) (58kW)	87-98				**PF194**	Ate	Ø 20,64	+Servo
	87-98				**PF131**	Bdx	Ø 20,64	+ABS, +Servo
1.6 Cabrio, Aut Eng.BDY(XU5M2Z/ 3Z) (65-66kW)	90-98		R	L	**CF052**	Bdx	Ø 19,05	CRCI, +Servo
	90-98		R	L	**CF050**	Luc	Ø 19,05	CRCI, +Servo
	90-98		R	R	**CF053**	Bdx	Ø 19,05	CRCI, +Servo
	90-98		R	R	**CF051**	Luc	Ø 19,05	CRCI, +Servo
	90-98				**PF008**	Ate	Ø 19,00	-ABS, +Servo, 3 Connections
	90-98				**PF169**	Ate	Ø 19,05	+Servo, 4 Connections
	90-98				**PF007**	Ate	Ø 20,64	+Servo, 4 Connections
	90-98				**PF194**	Ate	Ø 20,64	+Servo
	90-98				**PF131**	Bdx	Ø 20,64	+ABS, +Servo
1.6 GTI Eng.180A/ Z(XU5J-J/ JA/ JP) (76kW)	87-89		R		**CF088**	Luc	Ø 19,05	
	87-89				**PF008**	Ate	Ø 19,00	-ABS, +Servo, 3 Connections
	87-89				**PF169**	Ate	Ø 19,05	+Servo, 4 Connections
1.6 GTI Eng.B6D(XU5J) (85kW)	87-89		R		**CF088**	Luc	Ø 19,05	
	87-89				**PF008**	Ate	Ø 19,00	-ABS, +Servo, 3 Connections
	87-89				**PF169**	Ate	Ø 19,05	+Servo, 4 Connections
1.6, Kat Eng.B1A/ BAZ(XU51C/ CP) (55kW)	87-98		R	L	**CF052**	Bdx	Ø 19,05	CRCI, +Servo
	87-98		R	L	**CF050**	Luc	Ø 19,05	CRCI, +Servo
	87-98		R	R	**CF053**	Bdx	Ø 19,05	CRCI, +Servo
	87-98		R	R	**CF051**	Luc	Ø 19,05	CRCI, +Servo
	87-98				**PF008**	Ate	Ø 19,00	-ABS, +Servo, 3 Connections
	87-98				**PF169**	Ate	Ø 19,05	+Servo, 4 Connections
	87-98				**PF007**	Ate	Ø 20,64	+Servo, 4 Connections
	87-98				**PF194**	Ate	Ø 20,64	+Servo
	87-98				**PF131**	Bdx	Ø 20,64	+ABS, +Servo
1.8 D Eng.161A(XUD7) (44kW)	87-89		R	L	**CF052**	Bdx	Ø 19,05	CRCI, +Servo
	87-89		R	L	**CF050**	Luc	Ø 19,05	CRCI, +Servo
	87-89		R	R	**CF053**	Bdx	Ø 19,05	CRCI, +Servo
	87-89		R	R	**CF051**	Luc	Ø 19,05	CRCI, +Servo
	87-89				**PF008**	Ate	Ø 19,00	-ABS, +Servo, 3 Connections
	87-89				**PF169**	Ate	Ø 19,05	+Servo, 4 Connections
	87-89				**PF007**	Ate	Ø 20,64	+Servo, 4 Connections
	87-89				**PF194**	Ate	Ø 20,64	+Servo
	87-89				**PF131**	Bdx	Ø 20,64	+ABS, +Servo
1.8 TD Eng.A8B(XUD7TE) (57kW)	90-98		R		**CF088**	Luc	Ø 19,05	
	90-98				**PF007**	Ate	Ø 20,64	
	90-98				**PF131**	Bdx	Ø 20,64	+ABS
1.9 D Eng.DJZ(XUD9Y) (47kW)	87-98		R	L	**CF052**	Bdx	Ø 19,05	CRCI, +Servo
	87-98		R	L	**CF050**	Luc	Ø 19,05	CRCI, +Servo
	87-98		R	R	**CF053**	Bdx	Ø 19,05	CRCI, +Servo
	87-98		R	R	**CF051**	Luc	Ø 19,05	CRCI, +Servo
	87-98				**PF008**	Ate	Ø 19,00	-ABS, +Servo, 3 Connections
	87-98				**PF169**	Ate	Ø 19,05	+Servo, 4 Connections
	87-98				**PF007**	Ate	Ø 20,64	+Servo, 4 Connections
	87-98				**PF194**	Ate	Ø 20,64	+Servo
	87-98				**PF131**	Bdx	Ø 20,64	+ABS, +Servo
1.9 GTI Eng.D2A(XU92C/ 2S) (75-77kW)	87-89		R		**CF088**	Luc	Ø 19,05	
	87-89				**PF007**	Ate	Ø 20,64	-ABS
	87-89				**PF131**	Bdx	Ø 20,64	+ABS
	87-89				**PF201**	Bdx	Ø 20,64	+ABS
1.9 GTi Eng.D6B(XU9JA/ Z) (94-96kW)	87-98				**PF007**	Ate	Ø 20,64	
	87-98				**PF131**	Bdx	Ø 20,64	+ABS
	87-98				**PF201**	Bdx	Ø 20,64	+ABS
1.9 GTi Eng.DKZ(XU9JAZ) (88kW)	87-94				**PF008**	Ate	Ø 19,00	-ABS
1.9 GTI, CTI Cabrio, Kat Eng.DFZ(XU9J1) (75kW)	87-94		R		**CF088**	Luc	Ø 19,05	
	87-94				**PF007**	Ate	Ø 20,64	-ABS
	87-94				**PF131**	Bdx	Ø 20,64	+ABS
	87-94				**PF201**	Bdx	Ø 20,64	+ABS
206 (2A/C), SW 9/98-3/06								
1.1 Eng.HDZ(TU1M)/ HFX/ HFZ(TU1JP) (40-44kW)	98-		R	L	**CF061**	Bdx	Ø 20,64	CRCI, -ABS, -PS
	98-		R	R	**CF062**	Bdx	Ø 20,64	CRCI, -ABS, -PS
	98-		R		**CF102**	Bdx	Ø 19,05	-ABS, +PS
	98-		R		**CF162**	Luc	Ø 20,64	Alu, +ABS

PEUGEOT

		Spare Parts	F/R	L/R	FRITECH ref.		DIMENSIONS mm.	NOTE
1.1 Eng.HDZ(TU1M)/ HFX/ HFZ(TU1JP) (40-44kW)	02-06		R		**CF520**	Luc	Ø 20,64	Alu
	98-				**PF243**	Ate	Ø 22,20	Alu, +ABS, -ESP
	98-				**PF242**	Ate	Ø 20,64	Alu, -ABS
	98-				**PF273**	Bch	Ø 20,64	Alu, -ABS
1.4 Eng.KFW/ KFX(TU3JP) (55kW)	98-		R	L	**CF061**	Bdx	Ø 20,64	CRCI, -ABS, -PS
	98-		R	R	**CF062**	Bdx	Ø 20,64	CRCI, -ABS, -PS
	98-		R		**CF102**	Bdx	Ø 19,05	-ABS, +PS
	98-		R		**CF162**	Luc	Ø 20,64	Alu, +ABS
	02-06		R		**CF520**	Luc	Ø 20,64	Alu
	98-				**PF589**	Ate	Ø 22,20	Alu, +ABS, +ESP, A/T
	98-				**PF243**	Ate	Ø 22,20	Alu, +ABS, -ESP, M/T
	98-				**PF242**	Ate	Ø 20,64	Alu, -ABS, M/T
	98-				**PF599**	Ate	Ø 22,20	Alu, -ABS, A/T
	98-				**PF273**	Bch	Ø 20,64	Alu, -ABS, M/T
1.4 16v Eng.KFU(ET3J4) (65kW)	03-		R		**CF162**	Luc	Ø 20,64	Alu, +ABS
	03-				**PF590**	Ate	Ø 22,20	Alu, +ABS, +ESP
	03-				**PF243**	Ate	Ø 22,20	Alu, +ABS, -ESP
	03-				**PF269**	Ate	Ø 22,20	Alu, -ABS, -ESP
	03-				**PF242**	Ate	Ø 20,64	Alu, -ABS
1.4 HDi Eng.8HX/8HZ(DV4TD) (50-51kW)	01-		R		**CF162**	Luc	Ø 20,64	Alu, +ABS
	02-06		R		**CF520**	Luc	Ø 20,64	Alu
	01-				**PF590**	Ate	Ø 22,20	Alu, +ABS, +ESP
	01-				**PF243**	Ate	Ø 22,20	Alu, +ABS, -ESP
	01-				**PF242**	Ate	Ø 20,64	Alu, -ABS
1.6 (Exc. SW) Eng.NFZ(TU5JP) (65kW)	98-		R	L	**CF061**	Bdx	Ø 20,64	CRCI, -ABS, -PS
	98-		R	R	**CF062**	Bdx	Ø 20,64	CRCI, -ABS, -PS
	98-		R		**CF102**	Bdx	Ø 19,05	-ABS, +PS
	98-		R		**CF162**	Luc	Ø 20,64	Alu, +ABS
	98-				**PF589**	Ate	Ø 22,20	Alu, +ABS, +ESP, A/T
	98-				**PF243**	Ate	Ø 22,20	Alu, +ABS, -ESP, M/T
	98-				**PF242**	Ate	Ø 20,64	Alu, -ABS, M/T
	98-00				**PF599**	Ate	Ø 22,20	Alu, -ABS, A/T
	98-				**PF273**	Bch	Ø 20,64	Alu, -ABS, M/T
1.6 16v, Cabrio Eng.NFU(TU5JP4) (80-87kW)	00-06		R		**CF162**	Luc	Ø 20,64	Eng -11040UW, Alu
	00-				**PF589**	Ate	Ø 22,20	Alu, +ABS, +ESP, A/T
	00-				**PF590**	Ate	Ø 22,20	Alu, +ABS, +ESP, M/T
	00-				**PF243**	Ate	Ø 22,20	Alu, +ABS, -ESP, M/T
	00-				**PF269**	Ate	Ø 22,20	Alu, -ABS, M/T
	00-				**PF599**	Ate	Ø 22,20	Alu, -ABS, A/T
	07-				**CZ103**	Fte	Ø 19,05	Pla
1.6 HDi 16v FAP Eng.9HY/9HZ(DV6TED4) (80kW)	5/04-				**PF590**	Ate	Ø 22,20	Alu, +ABS, +ESP
	5/04-				**PF243**	Ate	Ø 22,20	Alu, +ABS, -ESP
	04-				**CZ103**	Fte	Ø 19,05	Pla
1.9 D (Exc. SW) Eng.WJZ/ WJY(DW8/ B) (51kW)	1/99-01		R	L	**CF142**	Bch	Ø 19,05	CRCI, -ABS
	1/99-01		R	R	**CF143**	Bch	Ø 19,05	CRCI, -ABS
	98-		R		**CF102**	Bdx	Ø 19,05	-ABS, +PS
	98-		R		**CF162**	Luc	Ø 20,64	Alu, Exc. Scandinavia, +ABS
	98-				**PF243**	Ate	Ø 22,20	Alu, Exc. Scandinavia, +ABS, -ESP
	98-				**PF242**	Ate	Ø 20,64	Alu, -ABS
	98-				**PF273**	Bch	Ø 20,64	Alu, -ABS
2.0 16v (Exc. SW) Eng.RFR(DEW10J4) (99kW)	4/99-				**PF590**	Ate	Ø 22,20	Alu, +ABS, +ESP
	4/99-				**PF243**	Ate	Ø 22,20	Alu, +ABS, -ESP
2.0 16v, Cabrio Eng.RFN(EW10J4) (100kW)	00-				**PF590**	Ate	Ø 22,20	Alu, +ABS, +ESP
	00-				**PF243**	Ate	Ø 22,20	Alu, +ABS, -ESP
2.0 HDi Eng.RHY(DW10TD) (66kW)	99-		R		**CF162**	Luc	Ø 20,64	Alu, Exc. Scandinavia, +ABS
	02-06		R		**CF520**	Luc	Ø 20,64	Alu
	99-				**PF590**	Ate	Ø 22,20	Alu, +ABS, +ESP
	99-				**PF243**	Ate	Ø 22,20	Alu, Exc. Scandinavia, +ABS, -ESP
	99-				**PF242**	Ate	Ø 20,64	Alu, SW, -ABS
	99-				**PF269**	Ate	Ø 22,20	Alu, Exc. SW, -ABS
2.0 RC (Exc. SW) Eng.RFK(EW10J4S) (130kW)	03-				**PF590**	Ate	Ø 22,20	Alu, +ABS, +ESP
206 Plus (T3E) 1/09-12/12								
1.1 Eng.HFX(TU1A/TU1JP) (44kW)	09-		R	L	**CF061**	Bdx	Ø 20,64	CRCI, -ABS, -PS
	09-		R	R	**CF062**	Bdx	Ø 20,64	CRCI, -ABS, -PS

		Spare Parts	F/R	L/R	FRITECH ref.		DIMENSIONS mm.	NOTE
1.1 Eng.HFX(TU1A/TU1JP) (44kW)	09-		R		**CF102**	Bdx	Ø 19,05	-ABS, +PS
	09-		R		**CF162**	Luc	Ø 20,64	Alu, +ABS
1.4 HDi Eng.8HX/8HZ(DV4TD) (50kW)	09-		R	L	**CF061**	Bdx	Ø 20,64	CRCI, -ABS, -PS
	09-		R	R	**CF062**	Bdx	Ø 20,64	CRCI, -ABS, -PS
	09-		R		**CF102**	Bdx	Ø 19,05	-ABS, +PS
	09-		R		**CF162**	Luc	Ø 20,64	Alu, +ABS
1.4i Eng.KFV/KFW(TU3A) (55kW)	09-		R	L	**CF061**	Bdx	Ø 20,64	CRCI, -ABS, -PS
	09-		R	R	**CF062**	Bdx	Ø 20,64	CRCI, -ABS, -PS
	09-		R		**CF102**	Bdx	Ø 19,05	-ABS, +PS
	09-		R		**CF162**	Luc	Ø 20,64	Alu, +ABS
1.6 16v Eng.NFU (TU5JP4) (80kW)	10-5/13				**PF589**	Ate	Ø 22,20	Alu
207, SW (WA, WC, WD, WK) 4/06-12/15								
1.4 Eng.KFV(TU3JP) (53kW)	04/06-		R	L	**CF046**	Bdx	Ø 20,64	CRCI, -ABS
	04/06-		R	R	**CF047**	Bdx	Ø 20,64	CRCI, -ABS
	4/06-		R		**CF850**	Bch	Ø 20,64	Alu, Brake drum 9Inch, +ABS
	06-				**PF792**	Trw	Ø 22,20	Alu, +ABS, +ESP
	06-				**PF791**	Trw	Ø 22,20	Alu, +ABS, -ESP
	06-				**PF989**	Trw	Ø 22,20	Alu, -ABS
1.4 Eng.KFW(TU3A) (55kW)	08-		R		**CF850**	Bch	Ø 20,64	Alu, Brake drum 9Inch, +ABS
	08-		R		**CF046**	Bdx	Ø 20,64	CRCI, -ABS
	08-				**PF792**	Trw	Ø 22,20	Alu, +ABS, +ESP
	08-				**PF791**	Trw	Ø 22,20	Alu, +ABS, -ESP
	08-				**PF989**	Trw	Ø 22,20	Alu, -ABS
1.4 16v Eng.8FS(EP3C) (70kW)	07-		R		**CF850**	Bch	Ø 20,64	Alu, Brake drum 9Inch, +ABS
	07-				**PF792**	Trw	Ø 22,20	Alu, +ABS, +ESP
	07-				**PF791**	Trw	Ø 22,20	Alu, +ABS, -ESP
1.4 16v Eng.KFU(ET3J4) (65kW)	4/06-		R		**CF850**	Bch	Ø 20,64	Alu, Brake drum 9Inch, +ABS
	06-				**PF792**	Trw	Ø 22,20	Alu, +ABS, +ESP
	06-				**PF791**	Trw	Ø 22,20	Alu, +ABS, -ESP
1.4 8v Eng.TU3AM (54-60kW)	10-		R		**CF850**	Bch	Ø 20,64	Alu, Brake drum 9Inch, +ABS
	06-				**PF792**	Trw	Ø 22,20	Alu, +ABS, +ESP
	10-				**PF791**	Trw	Ø 22,20	Alu, +ABS, -ESP
	10-				**PF989**	Trw	Ø 22,20	Alu, -ABS
1.4 HDi Eng.8HR/8HZ(DV4TD) (50kW)	04/06-		R	L	**CF046**	Bdx	Ø 20,64	CRCI, -ABS
	04/06-		R	R	**CF047**	Bdx	Ø 20,64	CRCI, -ABS
	4/06-		R		**CF850**	Bch	Ø 20,64	Alu, Brake drum 9Inch, +ABS
	06-				**PF792**	Trw	Ø 22,20	Alu, +ABS, +ESP
	06-				**PF791**	Trw	Ø 22,20	Alu, +ABS, -ESP
	06-				**PF989**	Trw	Ø 22,20	Alu, -ABS
1.6 16v Eng.5FY(EP6DTS) (128kW)	07-				**PF855**	Trw	Ø 23,81	Alu, +ABS, +ESP
	07-				**PF854**	Trw	Ø 23,81	Alu, +ABS, -ESP
1.6 16v Eng.NFU(TU5JP4) (80kW)	06-				**PF792**	Trw	Ø 22,20	Alu, +ABS, +ESP
	06-				**PF791**	Trw	Ø 22,20	Alu, +ABS, -ESP
1.6 16v, Coupe Eng.5FX(EP6DT) (110kW)	06-				**PF855**	Trw	Ø 23,81	Alu, +ABS, +ESP
	06-				**PF854**	Trw	Ø 23,81	Alu, +ABS, -ESP
1.6 16v, Coupe Eng.EP6 (88kW)	07-				**PF855**	Trw	Ø 23,81	Alu, +ABS, +ESP
	07-				**PF854**	Trw	Ø 23,81	Alu, +ABS, -ESP
1.6 16v, Coupe, Cabrio Eng.5FV(EP6CDT) (115kW)	10-				**PF855**	Trw	Ø 23,81	Alu, +ABS, +ESP
	10-				**PF854**	Trw	Ø 23,81	Alu, +ABS, -ESP
1.6 HDi 16v Eng.9HX(DV6ATED4) (66kW)	06-				**PF792**	Trw	Ø 22,20	Alu, +ABS, +ESP
	06-				**PF791**	Trw	Ø 22,20	Alu, +ABS, -ESP
1.6 HDi 16v FAP, Coupe, Cabrio	06-				**PF855**	Trw	Ø 23,81	Alu, +ABS, +ESP
Eng.9HY/9HZ(DV6TED4) (80kW)	06-				**PF854**	Trw	Ø 23,81	Alu, +ABS, -ESP
1.6 HDi 8v Eng.9HP(DV6DTED) (68kW)	10-		R		**CF850**	Bch	Ø 20,64	Alu, Brake drum 9Inch
	10-				**PF855**	Trw	Ø 23,81	Alu, +ABS, +ESP
	10-				**PF854**	Trw	Ø 23,81	Alu, +ABS, -ESP
1.6 HDi Coupe, Cabrio Eng.9HZ(DV6C) (82kW)	10-				**PF855**	Trw	Ø 23,81	Alu, +ABS, +ESP
	10-				**PF854**	Trw	Ø 23,81	Alu, +ABS, -ESP
208 3/12-								
1.0 Eng.EB0 (50kW)	12-		R		**CF921**	Bch	Ø 20,64	Alu
	-7/13				**PF918**	Bch	Ø 22,20	Alu, Rear Drum Brake, +ESP
	12-7/13				**PF916**	Bch	Ø 22,20	Alu, Rear Drum Brake, -DSC, -ESP
	12-				**PF855**	Trw	Ø 23,81	Alu, Rear Disc Brake, +ABS, +DSC, +ESP
	12-				**PF854**	Trw	Ø 23,81	Alu, Rear Disc Brake, +ABS, -DSC, -ESP

PEUGEOT

		Spare Parts	F/R	L/R	FRITECH ref.		DIMENSIONS mm.	NOTE
1.2 THP Eng.HNZ(EB2DT) (81kW)	13-		R		**CF921**	Bch	Ø 20,64	Alu
	13-				**PF918**	Bch	Ø 22,20	Alu, Rear Drum Brake, +ESP
	13-				**PF855**	Trw	Ø 23,81	Alu, Rear Disc Brake, +ESP
	13-				**PF791**	Trw	Ø 22,20	Alu, Rear Drum Brake, -ESP
	13-				**PF854**	Trw	Ø 23,81	Alu, Rear Disc Brake, -ESP
1.2 VTi 12v Eng.EB2 (60kW)	12-		R		**CF921**	Bch	Ø 20,64	Alu
	12-				**PF918**	Bch	Ø 22,20	Alu, Rear Drum Brake, +DSC, +ESP
	12-7/13				**PF916**	Bch	Ø 22,20	Alu, Rear Drum Brake, -DSC, -ESP
	12-				**PF855**	Trw	Ø 23,81	Alu, Rear Disc Brake, +ABS, +DSC, +ESP
	12-				**PF854**	Trw	Ø 23,81	Alu, Rear Disc Brake, +ABS, -DSC, -ESP
1.4 8v HDi Eng.DV4C (50kW)	12-		R		**CF921**	Bch	Ø 20,64	Alu
	12-				**PF792**	Trw	Ø 22,20	Alu, Rear Drum Brake, +ABS, +ESP
	12-				**PF855**	Trw	Ø 23,81	Alu, Rear Disc Brake, +ABS, +ESP
1.4 GPL Eng.EP3C (70kW)	13-		R		**CF921**	Bch	Ø 20,64	Alu
	13-				**PF792**	Trw	Ø 22,20	Alu, Rear Drum Brake, +ESP
	13-				**PF855**	Trw	Ø 23,81	Alu, Rear Disc Brake, +ESP
	13-				**PF791**	Trw	Ø 22,20	Alu, Rear Drum Brake, -ESP
	13-				**PF854**	Trw	Ø 23,81	Alu, Rear Disc Brake, -ESP
1.4 VTi Eng.EP3C/ 8FS (70kW)	12-		R		**CF921**	Bch	Ø 20,64	Alu
	12-				**PF919**	Bch	Ø 23,81	Alu, +ESP
	12-				**PF917**	Bch	Ø 23,81	Alu, -ESP
	12-				**PF792**	Trw	Ø 22,20	Alu, Rear Drum Brake, +ABS, +ESP
	12-				**PF855**	Trw	Ø 23,81	Alu, Rear Disc Brake, +ABS, +ESP
1.6 BlueHDi Eng.BHZ(DV6FC) (88kW)	15-		R		**CF921**	Bch	Ø 20,64	Alu
	13-				**PF792**	Trw	Ø 22,20	Alu, Rear Drum Brake, +ESP
	13-				**PF855**	Trw	Ø 23,81	Alu, Rear Disc Brake, +ESP
	13-				**PF791**	Trw	Ø 22,20	Alu, Rear Drum Brake, -ESP
	13-				**PF854**	Trw	Ø 23,81	Alu, Rear Disc Brake, -ESP
1.6 e-HDi Eng.9HP(DV6DTED) (68kW)	12-		R		**CF921**	Bch	Ø 20,64	Alu
	12-				**PF792**	Trw	Ø 22,20	Alu, Rear Drum Brake, +ABS, +ESP
	12-				**PF855**	Trw	Ø 23,81	Alu, Rear Disc Brake, +ABS, +ESP
1.6 e-HDi Eng.DV6C (84kW)	12-		R		**CF921**	Bch	Ø 20,64	Alu
	12-				**PF792**	Trw	Ø 22,20	Alu, Rear Drum Brake, +ABS, +ESP
	12-				**PF855**	Trw	Ø 23,81	Alu, Rear Disc Brake, +ABS, +ESP
1.6 HDi Eng.9HK(DV6ETEDM) (55kW)	13-		R		**CF921**	Bch	Ø 20,64	Alu
	13-				**PF792**	Trw	Ø 22,20	Alu, Rear Drum Brake, +ESP
	13-				**PF855**	Trw	Ø 23,81	Alu, Rear Disc Brake, +ESP
	13-				**PF791**	Trw	Ø 22,20	Alu, Rear Drum Brake, -ESP
	13-				**PF854**	Trw	Ø 23,81	Alu, Rear Disc Brake, -ESP
1.6 HDi Eng.BHX (DV6FC) (85kW)	14-		R		**CF921**	Bch	Ø 20,64	Alu
	14-				**PF792**	Trw	Ø 22,20	Alu, Rear Drum Brake, +ESP
	14-				**PF855**	Trw	Ø 23,81	Alu, Rear Disc Brake, +ESP
	14-				**PF791**	Trw	Ø 22,20	Alu, Rear Drum Brake, -ESP
	14-				**PF854**	Trw	Ø 23,81	Alu, Rear Disc Brake, -ESP
1.6 HDi Eng.BHY(DV6FD) (73kW)	15-		R		**CF921**	Bch	Ø 20,64	Alu
	15-				**PF792**	Trw	Ø 22,20	Alu, Rear Drum Brake, +ESP
	15-				**PF855**	Trw	Ø 23,81	Alu, Rear Disc Brake, +ESP
	15-				**PF791**	Trw	Ø 22,20	Alu, Rear Drum Brake, -ESP
	15-				**PF854**	Trw	Ø 23,81	Alu, Rear Disc Brake, -ESP
1.6 THP Eng.5FV(EP6CDT) (115kW)	12-		R		**CF921**	Bch	Ø 20,64	Alu
	12-				**PF792**	Trw	Ø 22,20	Alu, Rear Drum Brake, +ABS, +DSC, +ESP
	12-				**PF855**	Trw	Ø 23,81	Alu, Rear Disc Brake, +ABS, +DSC, +ESP
	12-				**PF791**	Trw	Ø 22,20	Alu, Rear Drum Brake, +ABS, -DSC, -ESP
	12-				**PF854**	Trw	Ø 23,81	Alu, Rear Disc Brake, +ABS, -DSC, -ESP
1.6 THP GTi Eng.5FU(EP6CDTX) (147kW)	13-		R		**CF921**	Bch	Ø 20,64	Alu
	13-				**PF792**	Trw	Ø 22,20	Alu, Rear Drum Brake, +ESP
	13-				**PF855**	Trw	Ø 23,81	Alu, Rear Disc Brake, +ESP
	13-				**PF791**	Trw	Ø 22,20	Alu, Rear Drum Brake, -ESP
	13-				**PF854**	Trw	Ø 23,81	Alu, Rear Disc Brake, -ESP
1.6 THP GTi Eng.EP6FDTX (153kW)	14-		R		**CF921**	Bch	Ø 20,64	Alu
	14-				**PF792**	Trw	Ø 22,20	Alu, Rear Drum Brake, +ESP
	14-				**PF855**	Trw	Ø 23,81	Alu, Rear Disc Brake, +ESP
	14-				**PF791**	Trw	Ø 22,20	Alu, Rear Drum Brake, -ESP
	14-				**PF854**	Trw	Ø 23,81	Alu, Rear Disc Brake, -ESP

		Spare Parts	F/R	L/R	FRITECH ref.		DIMENSIONS mm.	NOTE
1.6 VTi Eng.EP6C (88kW)	12-		R		**CF921**	Bch	Ø 20,64	Alu
	12-				**PF792**	Trw	Ø 22,20	Alu, Rear Drum Brake, +ABS, +ESP
	12-				**PF855**	Trw	Ø 23,81	Alu, Rear Disc Brake, +ABS, +ESP
301 11/12-								
1.2 VTi 72 (53kW)	12-		R	L	**CF061**	Bdx	Ø 20,64	CRCI, -ABS
	12-		R	R	**CF062**	Bdx	Ø 20,64	CRCI, -ABS
	12-		R		**CF921**	Bch	Ø 20,64	Alu, +ABS
1.6 HDI 90 Eng.9HF(DV6DTED) (68kW)	12-		R	L	**CF061**	Bdx	Ø 20,64	CRCI, -ABS
	12-		R	R	**CF062**	Bdx	Ø 20,64	CRCI, -ABS
	12-		R		**CF921**	Bch	Ø 20,64	Alu, +ABS
1.6 VTi 115 Eng.NFP (85kW)	12-		R	L	**CF061**	Bdx	Ø 20,64	CRCI, -ABS
	12-		R	R	**CF062**	Bdx	Ø 20,64	CRCI, -ABS
	12-		R		**CF921**	Bch	Ø 20,64	Alu, +ABS
304 10/69-10/80								
1.1 Break Eng.XK5 (40-43kW)	76-80		R		**CF019**	Bdx	Ø 23,81	
	76-80		R		**CF036**	Luc	Ø 22,00	
	76-80				**PF081**	Luc	Ø 19,05	
1.3 Break, GT, Coupe, Cabrio Eng.XL3/ XL3S	69-75		R		**CF338**	Bdx	Ø 19,05	
(48-55kW)	7/75-9/75		R		**CF019**	Bdx	Ø 23,81	
	7/75-9/75		R		**CF036**	Luc	Ø 22,00	
	7/75-9/75				**PF081**	Luc	Ø 19,05	
1.3, Break Eng.118(XL5/ S) (44-48-51kW)	72-7/75		R		**CF338**	Bdx	Ø 19,05	
	7/75-79		R		**CF019**	Bdx	Ø 23,81	
	7/75-79		R		**CF036**	Luc	Ø 22,00	
	7/75-79				**PF081**	Luc	Ø 19,05	
1.3, Coupe, Cabrio Eng.118(XL5/ S) (44-51-55kW)	72-7/75		R		**CF338**	Bdx	Ø 19,05	
	7/75-76		R		**CF019**	Bdx	Ø 23,81	
	7/75-76		R		**CF036**	Luc	Ø 22,00	
	7/75-76				**PF081**	Luc	Ø 19,05	
1.4 D, Break Eng.XL4D (33kW)	76-79		R		**CF019**	Bdx	Ø 23,81	
	76-79		R		**CF036**	Luc	Ø 22,00	
	76-79				**PF081**	Luc	Ø 19,05	
305 I (581A) 11/77-9/82								
1.3, Break Eng.118(XL5/ S/ XK5) (40-44-48-51kW)	-82		R		**CF533**	Ate	Ø 22,20	Ch 8209617-
	77-82		R		**CF019**	Bdx	Ø 23,81	
	77-82		R		**CF036**	Luc	Ø 22,00	
	77-80				**PF081**	Luc	Ø 19,05	
	80-82				**PF139**		Ø 19,05	
1.5 Eng.117(XR5A/ S) (65kW)	-82		R		**CF533**	Ate	Ø 22,20	Ch 8209617-
	80-82		R		**CF019**	Bdx	Ø 23,81	
	80-82		R		**CF036**	Luc	Ø 22,00	
	80-82				**PF139**		Ø 19,05	
1.5 D, Break Eng.149(XID) (32-36kW)	-82		R		**CF533**	Ate	Ø 22,20	Ch 8209617-
	77-82		R		**CF019**	Bdx	Ø 23,81	
	77-82		R		**CF036**	Luc	Ø 22,00	
	77-80				**PF081**	Luc	Ø 19,05	
	80-82				**PF139**		Ø 19,05	
1.5, Break Eng.142(XR5A/ S) (54kW)	-82		R		**CF533**	Ate	Ø 22,20	Ch 8209617-
	79-82		R		**CF019**	Bdx	Ø 23,81	
	79-82		R		**CF036**	Luc	Ø 22,00	
	79-80				**PF081**	Luc	Ø 19,05	
	80-82				**PF139**		Ø 19,05	
305 II (581M/E), Break 10/82-7/90								
1.3 Eng.118(XL5/ S) (44-51kW)	82-85		R		**CF027**	Bdx	Ø 20,64	
	82-85		R		**CF030**	Luc	Ø 20,64	
	82-85				**PF139**		Ø 19,05	
1.5 Eng.142(XR5A/ S) (54kW)	82-85		R		**CF027**	Bdx	Ø 20,64	
	82-85		R		**CF030**	Luc	Ø 20,64	
	82-85				**PF139**		Ø 19,05	
1.6 Eng.171(XU5S) (66kW)	82-87		R		**CF027**	Bdx	Ø 20,64	
	82-87		R		**CF030**	Luc	Ø 20,64	
	82-87				**PF169**	Ate	Ø 19,05	
	82-87				**PF139**		Ø 19,05	

PEUGEOT

		Spare Parts	F/R	L/R	FRITECH ref.		DIMENSIONS mm.	NOTE
1.6 Eng.BAZ(XU5CP) (54kW)	86-88		R		**CF027**	Bdx	Ø 20,64	
	86-88		R		**CF030**	Luc	Ø 20,64	
	86-88				**PF169**	Ate	Ø 19,05	
	86-88				**PF139**		Ø 19,05	
1.8 D Eng.161A(XUD7) (44kW)	82-87		R		**CF027**	Bdx	Ø 20,64	
	82-87		R		**CF030**	Luc	Ø 20,64	
	82-87				**PF169**	Ate	Ø 19,05	LHD
	82-87				**PF139**		Ø 19,05	RHD
1.9 Eng.DFZ(XU9J1) (72kW)	86-88		R		**CF027**	Bdx	Ø 20,64	
	86-88		R		**CF030**	Luc	Ø 20,64	
	86-88				**PF169**	Ate	Ø 19,05	
1.9 D Eng.162/ D9A(XUD9)/ DJZ(XUD9Y) (47kW)	82-87		R		**CF027**	Bdx	Ø 20,64	
	82-87		R		**CF030**	Luc	Ø 20,64	
	82-87				**PF169**	Ate	Ø 19,05	LHD
	82-87				**PF139**		Ø 19,05	RHD
306 (7B, N3) 5/93-5/01								
1.1 Eng.HDZ(TU1M/ MZ) (44kW)	2/93-96		R	L	**CF061**	Bdx	Ø 20,64	CRCI, -ABS
	2/93-96		R	L	**CF043**	Luc	Ø 20,64	CRCI, -ABS
	2/93-96		R	R	**CF062**	Bdx	Ø 20,64	CRCI, -ABS
	2/93-96		R	R	**CF042**	Luc	Ø 20,64	CRCI, -ABS
	2/93-96		R		**CF133**	Bdx	Ø 20,64	Driving School, +ABS
	3/94-8/95		R		**CF104**	Luc	Ø 20,64	+ABS
	9/95-97		R		**CF159**	Luc	Ø 20,64	+ABS
	1/94-96				**PF195**	Ate	Ø 20,64	Driving School, -ABS
	3/94-				**PF201**	Bdx	Ø 20,64	Ch -S30209024, +ABS
	-97				**PF202**		Ø 22,20	Ch S30209025-, +ABS
	2/93-96				**PF200**		Ø 19,05	-ABS
1.4 SL Eng.KFW/ KFX(TU3JP)/ KDX(TU3MC)	2/93-01		R	L	**CF061**	Bdx	Ø 20,64	CRCI, -ABS
(55kW)	2/93-01		R	L	**CF043**	Luc	Ø 20,64	CRCI, -ABS
	2/93-01		R	R	**CF062**	Bdx	Ø 20,64	CRCI, -ABS
	2/93-01		R	R	**CF042**	Luc	Ø 20,64	CRCI, -ABS
	1/94-96		R		**CF133**	Bdx	Ø 20,64	Driving School
	9/95-		R		**CF159**	Luc	Ø 20,64	Ch -08729, +ABS
	-5/01		R		**CF162**	Luc	Ø 20,64	Ch 08730-, Alu, +ABS
	6/93-8/95		R		**CF104**	Luc	Ø 20,64	+ABS
	4/97-				**PF243**	Ate	Ø 22,20	Ch -08575, Alu, +ABS
	1/94-96				**PF195**	Ate	Ø 20,64	Driving School, -ABS
	4/97-				**PF242**	Ate	Ø 20,64	Alu, -ABS
	4/97-				**PF274**	Bch	Ø 22,20	Ch -08575, Alu, +ABS
	6/93-				**PF201**	Bdx	Ø 20,64	Ch -30209024, +ABS
	-01				**PF268**	Bdx	Ø 23,81	Ch 08576-, Alu, +ABS
	4/97-				**PF267**	Bdx	Ø 20,64	Alu, -ABS
	-96				**PF202**		Ø 22,20	Ch 30209025-, +ABS
	2/93-96				**PF200**		Ø 19,05	-ABS
1.6 Eng.NFT (72kW)	00-		R	L	**CF061**	Bdx	Ø 20,64	CRCI, -ABS
	00-		R	L	**CF043**	Luc	Ø 20,64	CRCI, -ABS
	00-		R	R	**CF062**	Bdx	Ø 20,64	CRCI, -ABS
	00-		R	R	**CF042**	Luc	Ø 20,64	CRCI, -ABS
	00-		R		**CF159**	Luc	Ø 20,64	Ch -08729, +ABS
	-01		R		**CF162**	Luc	Ø 20,64	Ch 08730-, Alu, +ABS
	00-				**PF242**	Ate	Ø 20,64	Alu, -ABS
	00-				**PF268**	Bdx	Ø 23,81	Alu, +ABS
	00-				**PF267**	Bdx	Ø 20,64	Alu, -ABS
1.6 SR Eng.NFZ(TU5JP) (65-66kW)	6/93-		R	L	**CF061**	Bdx	Ø 20,64	CRCI, -ABS
	6/93-96		R	L	**CF043**	Luc	Ø 20,64	CRCI, -ABS
	6/93-		R	R	**CF062**	Bdx	Ø 20,64	CRCI, -ABS
	6/93-96		R	R	**CF042**	Luc	Ø 20,64	CRCI, -ABS
	6/93-8/95		R		**CF104**	Luc	Ø 20,64	+ABS
	9/95-00		R		**CF159**	Luc	Ø 20,64	+ABS
	4/97-				**PF243**	Ate	Ø 22,20	Ch -08575, Alu, +ABS
	4/97-				**PF242**	Ate	Ø 20,64	Alu, -ABS
	6/93-96				**PF195**	Ate	Ø 20,64	-ABS
	4/97-				**PF274**	Bch	Ø 22,20	Ch -08575, Alu, +ABS
	6/93-				**PF201**	Bdx	Ø 20,64	Ch -30209024, +ABS

		Spare Parts	F/R	L/R	FRITECH ref.		DIMENSIONS mm.	NOTE
1.6 SR Eng.NFZ(TU5JP) (65-66kW)	-10/00				**PF268**	Bdx	Ø 23,81	Ch 08576-, Alu, +ABS
	4/97-10/00				**PF267**	Bdx	Ø 20,64	Alu, -ABS
	-96				**PF202**		Ø 22,20	Ch 30209025-, +ABS
1.8 Eng.LFZ(XU7JP) (74kW)	4/94-96		R	L	**CF061**	Bdx	Ø 20,64	CRCI, -ABS
	4/94-96		R	L	**CF043**	Luc	Ø 20,64	CRCI, -ABS
	4/94-96		R	R	**CF062**	Bdx	Ø 20,64	CRCI, -ABS
	4/94-96		R	R	**CF042**	Luc	Ø 20,64	CRCI, -ABS
	9/95-		R		**CF159**	Luc	Ø 20,64	Ch -08729, +ABS
	-01		R		**CF162**	Luc	Ø 20,64	Ch 08730-, Alu, +ABS
	7/93-8/95		R		**CF104**	Luc	Ø 20,64	+ABS
	5/97-				**PF243**	Ate	Ø 22,20	Ch -08575, Alu, +ABS
	3/93-4/97				**PF195**	Ate	Ø 20,64	-ABS
	5/97-				**PF274**	Bch	Ø 22,20	Ch -08575, Alu, +ABS
	7/93-				**PF201**	Bdx	Ø 20,64	Ch -30209024, +ABS
	-5/01				**PF268**	Bdx	Ø 23,81	Ch 08576-, Alu, +ABS
	93-01				**PF213**	Bdx	Ø 20,64	Alu, -ABS, LHD/RHD
	97-01				**PF267**	Bdx	Ø 20,64	Alu, -ABS
	-96				**PF202**		Ø 22,20	Ch 30209025-, +ABS
1.8 16v Eng.LFY(XU7JP4) (81kW)	5/97-				**PF243**	Ate	Ø 22,20	Ch -08575, Alu, +ABS
	3/97-4/97				**PF195**	Ate	Ø 20,64	-ABS
	5/97-8/00				**PF269**	Ate	Ø 22,20	Alu, -ABS
	5/97-				**PF274**	Bch	Ø 22,20	Ch -08575, Alu, +ABS
	-01				**PF268**	Bdx	Ø 23,81	Ch 08576-, Alu, +ABS
	3/97-4/97				**PF202**		Ø 22,20	+ABS
1.8 D Eng.A9A(XUD7) (43kW)	6/93-		R	L	**CF061**	Bdx	Ø 20,64	CRCI, -ABS
	6/93-		R	L	**CF043**	Luc	Ø 20,64	CRCI, -ABS
	6/93-		R	R	**CF062**	Bdx	Ø 20,64	CRCI, -ABS
	6/93-		R	R	**CF042**	Luc	Ø 20,64	CRCI, -ABS
	93-96		R		**CF133**	Bdx	Ø 20,64	Driving School, +ABS
	8/95-		R		**CF159**	Luc	Ø 20,64	Ch -08729, +ABS
	-01		R		**CF162**	Luc	Ø 20,64	Ch 08730-, Alu, +ABS
	6/93-8/95		R		**CF104**	Luc	Ø 20,64	+ABS
	5/97-				**PF243**	Ate	Ø 22,20	Ch -08575, Alu, +ABS
	3/93-4/97				**PF195**	Ate	Ø 20,64	-ABS
	5/97-				**PF274**	Bch	Ø 22,20	Ch -08575, Alu, +ABS
	7/93-				**PF201**	Bdx	Ø 20,64	Ch -30209024, +ABS
	-5/01				**PF268**	Bdx	Ø 23,81	Ch 08576-, Alu, +ABS
	93-01				**PF213**	Bdx	Ø 20,64	Alu, -ABS, LHD/RHD
	97-01				**PF267**	Bdx	Ø 20,64	Alu, -ABS
	-96				**PF202**		Ø 22,20	Ch 30209025-, +ABS
1.8i Eng.L6A(XU7P/ K) (69kW)	93-		R	L	**CF061**	Bdx	Ø 20,64	CRCI, -ABS
	93-		R	L	**CF043**	Luc	Ø 20,64	CRCI, -ABS
	93-		R	R	**CF062**	Bdx	Ø 20,64	CRCI, -ABS
	93-		R	R	**CF042**	Luc	Ø 20,64	CRCI, -ABS
	93-		R		**CF159**	Luc	Ø 20,64	+ABS
	93-8/00				**PF243**	Ate	Ø 22,20	Ch -08575, Alu, +ABS
	93-				**PF242**	Ate	Ø 20,64	Alu, -ABS
	93-8/00				**PF274**	Bch	Ø 22,20	Alu, +ABS
	9/00-				**PF268**	Bdx	Ø 23,81	Ch -09001, Alu, +ABS
	93-				**PF267**	Bdx	Ø 20,64	Alu, -ABS
1.9 D Eng.DHV(XUD9BSD) (55kW)	98-		R	L	**CF061**	Bdx	Ø 20,64	CRCI, -ABS
	98-		R	L	**CF043**	Luc	Ø 20,64	CRCI, -ABS
	98-		R	R	**CF062**	Bdx	Ø 20,64	CRCI, -ABS
	98-		R	R	**CF042**	Luc	Ø 20,64	CRCI, -ABS
	98-		R		**CF133**	Bdx	Ø 20,64	Enterprise
	98-		R		**CF159**	Luc	Ø 20,64	Ch -08729, +ABS
			R		**CF162**	Luc	Ø 20,64	Ch 08730-, Alu, +ABS
	98-				**PF243**	Ate	Ø 22,20	Ch -08575, Alu, +ABS
	98-				**PF242**	Ate	Ø 20,64	Alu, -ABS
	98-				**PF274**	Bch	Ø 22,20	Ch -08575, Alu, +ABS
	-01				**PF268**	Bdx	Ø 23,81	Ch 08576-, Alu, +ABS
	98-				**PF267**	Bdx	Ø 20,64	Alu, -ABS
1.9 D Eng.WJZ/ WJY(DW8/ B) (51kW)	98-		R	L	**CF061**	Bdx	Ø 20,64	CRCI, -ABS
	98-		R	L	**CF043**	Luc	Ø 20,64	CRCI, -ABS

PEUGEOT

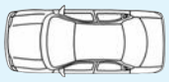		Spare Parts	F/R	L/R	FRITECH ref.		DIMENSIONS mm.	NOTE
1.9 D Eng.WJZ/ WJY(DW8/ B) (51kW)	98-		R	R	**CF062**	Bdx	Ø 20,64	CRCI, -ABS
	98-		R	R	**CF042**	Luc	Ø 20,64	CRCI, -ABS
	98-01		R		**CF133**	Bdx	Ø 20,64	Enterprise
	98-		R		**CF159**	Luc	Ø 20,64	Ch -08729, +ABS
			R		**CF162**	Luc	Ø 20,64	Ch 08730-, Alu, +ABS
	98-				**PF243**	Ate	Ø 22,20	Ch -08575, Alu, +ABS
	98-				**PF242**	Ate	Ø 20,64	Alu, -ABS
	98-				**PF274**	Bch	Ø 22,20	Ch -08575, Alu, +ABS
	-01				**PF268**	Bdx	Ø 23,81	Ch 08576-, Alu, +ABS
	98-				**PF267**	Bdx	Ø 20,64	Alu, -ABS
1.9 D, SLD Eng.DJZ(XUD9Y) (47kW)	6/93-96		R	L	**CF061**	Bdx	Ø 20,64	CRCI, -ABS
	6/93-96		R	L	**CF043**	Luc	Ø 20,64	CRCI, -ABS
	6/93-96		R	R	**CF062**	Bdx	Ø 20,64	CRCI, -ABS
	6/93-96		R	R	**CF042**	Luc	Ø 20,64	CRCI, -ABS
	6/93-96		R		**CF133**	Bdx	Ø 20,64	+ABS
	9/95-		R		**CF159**	Luc	Ø 20,64	Ch -08729, +ABS
	-01		R		**CF162**	Luc	Ø 20,64	Ch 08730-, Alu, +ABS
	6/93-8/95		R		**CF104**	Luc	Ø 20,64	+ABS
	5/97-				**PF243**	Ate	Ø 22,20	Ch -08575, Alu, +ABS
	3/93-4/97				**PF195**	Ate	Ø 20,64	-ABS
	5/97-				**PF274**	Bch	Ø 22,20	Ch -08575, Alu, +ABS
	6/93-				**PF201**	Bdx	Ø 20,64	Ch -30209024, +ABS
	-5/01				**PF268**	Bdx	Ø 23,81	Ch 08576-, Alu, +ABS
	93-01				**PF213**	Bdx	Ø 20,64	Alu, -ABS, LHD/RHD
	97-01				**PF267**	Bdx	Ø 20,64	Alu, -ABS
	-96				**PF202**		Ø 22,20	Ch 30209025-, +ABS
1.9 SLD Eng.DJY(XUD9A) (50-51kW)	6/94-96		R	L	**CF061**	Bdx	Ø 20,64	CRCI, -ABS
	6/94-96		R	L	**CF043**	Luc	Ø 20,64	CRCI, -ABS
	6/94-96		R	R	**CF062**	Bdx	Ø 20,64	CRCI, -ABS
	6/94-96		R	R	**CF042**	Luc	Ø 20,64	CRCI, -ABS
	6/94-96		R		**CF133**	Bdx	Ø 20,64	+ABS
	9/95-		R		**CF159**	Luc	Ø 20,64	Ch -08729, +ABS
	-01		R		**CF162**	Luc	Ø 20,64	Ch 08730-, Alu, +ABS
	6/94-8/95		R		**CF104**	Luc	Ø 20,64	+ABS
	5/97-				**PF243**	Ate	Ø 22,20	Ch -08575, Alu, +ABS
	3/93-4/97				**PF195**	Ate	Ø 20,64	-ABS
	5/97-				**PF274**	Bch	Ø 22,20	Ch -08575, Alu, +ABS
	94-				**PF201**	Bdx	Ø 20,64	Ch -30209024, +ABS
	-5/01				**PF268**	Bdx	Ø 23,81	Ch 08576-, Alu, +ABS
	94-01				**PF213**	Bdx	Ø 20,64	Alu, -ABS, LHD/RHD
	97-01				**PF267**	Bdx	Ø 20,64	Alu, -ABS
	-96				**PF202**		Ø 22,20	Ch 30209025-, +ABS
1.9 TD Eng.DHY(XUD9TE) (66-68kW)	6/93-96		R	L	**CF061**	Bdx	Ø 20,64	CRCI, -ABS
	6/93-96		R	L	**CF043**	Luc	Ø 20,64	CRCI, -ABS
	6/93-96		R	R	**CF062**	Bdx	Ø 20,64	CRCI, -ABS
	6/93-96		R	R	**CF042**	Luc	Ø 20,64	CRCI, -ABS
	6/93-8/95		R		**CF133**	Bdx	Ø 20,64	
	9/95-		R		**CF159**	Luc	Ø 20,64	Ch -08729, +ABS
	-01		R		**CF162**	Luc	Ø 20,64	Ch 08730-, Alu, +ABS
	6/93-8/95		R		**CF104**	Luc	Ø 20,64	+ABS
	4/97-8/00				**PF243**	Ate	Ø 22,20	Ch -08575, Alu, +ABS
	6/93-96				**PF195**	Ate	Ø 20,64	-ABS
	4/97-8/00				**PF274**	Bch	Ø 22,20	Alu, +ABS
	6/93-				**PF201**	Bdx	Ø 20,64	Ch -30209024, +ABS
	6/00-				**PF268**	Bdx	Ø 23,81	Ch -09001, Alu, +ABS
	4/97-				**PF213**	Bdx	Ø 20,64	Alu, -ABS
	-96				**PF202**		Ø 22,20	Ch 30209025-, +ABS
2.0 Eng.XU10J4R (99kW)	5/97-				**PF243**	Ate	Ø 22,20	Ch -08575, Alu, +ABS
	5/97-5/01				**PF269**	Ate	Ø 22,20	Alu, -ABS
	4/97-				**PF274**	Bch	Ø 22,20	Ch -08575, Alu, +ABS
	-01				**PF268**	Bdx	Ø 23,81	Ch 08576-, Alu, +ABS
	3/97-4/97				**PF202**		Ø 22,20	+ABS
2.0 16v Eng.RFT(XU10J4) (110kW)	5/97-				**PF243**	Ate	Ø 22,20	Ch -08575, Alu, +ABS
	3/94-4/97				**PF195**	Ate	Ø 20,64	-ABS

		Spare Parts	F/R	L/R	FRITECH ref.		DIMENSIONS mm.	NOTE
2.0 16v Eng.RFT(XU10J4) (110kW)	5/97-5/01				**PF269**	Ate	Ø 22,20	Alu, -ABS
	4/97-				**PF274**	Bch	Ø 22,20	Ch -08575, Alu, +ABS
	-01				**PF268**	Bdx	Ø 23,81	Ch 08576-, Alu, +ABS
	3/94-4/97				**PF202**		Ø 22,20	+ABS
2.0 16v Eng.RFV(XU10J4R) (97kW)	5/97-				**PF243**	Ate	Ø 22,20	Ch -08575, Alu, +ABS
	5/97-5/01				**PF269**	Ate	Ø 22,20	Alu, -ABS
	4/97-				**PF274**	Bch	Ø 22,20	Ch -08575, Alu, +ABS
	-01				**PF268**	Bdx	Ø 23,81	Ch 08576-, Alu, +ABS
	3/97-4/97				**PF202**		Ø 22,20	+ABS
2.0 HDi Eng.RHY(DW10TD) (66kW)	99-				**PF243**	Ate	Ø 22,20	Ch -08575, Alu, +ABS
	2/99-8/00				**PF269**	Ate	Ø 22,20	Alu, -ABS
	99-				**PF274**	Bch	Ø 22,20	Ch -08575, Alu, +ABS
					PF268	Bdx	Ø 23,81	Ch 08576-, Alu, +ABS
2.0 S16 Eng.RFY(XU10J4Z) (112kW)	5/97-				**PF243**	Ate	Ø 22,20	Ch -08575, Alu, +ABS
	93-4/97				**PF195**	Ate	Ø 20,64	-ABS
	5/97-5/01				**PF269**	Ate	Ø 22,20	Alu, -ABS
	4/97-				**PF274**	Bch	Ø 22,20	Ch -08575, Alu, +ABS
	-01				**PF268**	Bdx	Ø 23,81	Ch 08576-, Alu, +ABS
	93-4/97				**PF202**		Ø 22,20	+ABS
2.0 S16 GTi Eng.RFS(XU10J4RS) (120kW)	96-01				**PF268**	Bdx	Ø 23,81	Alu, +ABS
	3/96-01				**PF272**	Bdx	Ø 23,81	Ch -09001, Alu, -ABS
2.0, XSi Eng.RFX(XU10J2/ 2C) (89kW)	5/97-				**PF243**	Ate	Ø 22,20	Ch -08575, Alu, +ABS
	93-4/97				**PF195**	Ate	Ø 20,64	-ABS
	5/97-5/01				**PF269**	Ate	Ø 22,20	Alu, -ABS
	4/97-				**PF274**	Bch	Ø 22,20	Ch -08575, Alu, +ABS
	-01				**PF268**	Bdx	Ø 23,81	Ch 08576-, Alu, +ABS
	93-4/97				**PF202**		Ø 22,20	+ABS
306 (7D, N3,5) Cabrio 3/94-4/02								
1.6 Eng.NFT (72kW)	00-02		R	L	**CF061**	Bdx	Ø 20,64	CRCI, -ABS
	00-02		R	L	**CF043**	Luc	Ø 20,64	CRCI, -ABS
	00-02		R	R	**CF062**	Bdx	Ø 20,64	CRCI, -ABS
	00-02		R	R	**CF042**	Luc	Ø 20,64	CRCI, -ABS
	00-		R		**CF159**	Luc	Ø 20,64	Ch -08729, +ABS
	-02		R		**CF162**	Luc	Ø 20,64	Ch 08730-, Alu, +ABS
	00-02				**PF242**	Ate	Ø 20,64	Alu, -ABS
	00-02				**PF268**	Bdx	Ø 23,81	Alu, +ABS
	00-02				**PF267**	Bdx	Ø 20,64	Alu, -ABS
1.6 Eng.NFZ(TU5JP) (65kW)	96-00		R	L	**CF061**	Bdx	Ø 20,64	CRCI, -ABS
	96-00		R	R	**CF062**	Bdx	Ø 20,64	CRCI, -ABS
	96-00		R		**CF159**	Luc	Ø 20,64	+ABS
	96-97				**PF243**	Ate	Ø 22,20	Ch -08575, Alu, +ABS
	97-00				**PF242**	Ate	Ø 20,64	Alu, -ABS
	96-00				**PF274**	Bch	Ø 22,20	Ch -08575, Alu, +ABS
	96-00				**PF201**	Bdx	Ø 20,64	Ch -30209024, +ABS
	97-00				**PF268**	Bdx	Ø 23,81	Ch 08576-, Alu, +ABS
	96-97				**PF213**	Bdx	Ø 20,64	Alu, Only Cabrio, -ABS
	97-00				**PF267**	Bdx	Ø 20,64	Alu, -ABS
1.8 Eng.LFZ(XU7JP) (74kW)	3/94-96		R	L	**CF061**	Bdx	Ø 20,64	CRCI, -ABS
	3/94-96		R	L	**CF043**	Luc	Ø 20,64	CRCI, -ABS
	3/94-96		R	R	**CF062**	Bdx	Ø 20,64	CRCI, -ABS
	3/94-96		R	R	**CF042**	Luc	Ø 20,64	CRCI, -ABS
	9/95-		R		**CF159**	Luc	Ø 20,64	Ch -08729, +ABS
	-02		R		**CF162**	Luc	Ø 20,64	Ch 08730-, Alu, +ABS
	3/94-8/95		R		**CF104**	Luc	Ø 20,64	+ABS
	5/97-				**PF243**	Ate	Ø 22,20	Ch -08575, Alu, +ABS
	3/94-4/97				**PF195**	Ate	Ø 20,64	-ABS
	5/97-				**PF274**	Bch	Ø 22,20	Ch -08575, Alu, +ABS
	3/94-				**PF201**	Bdx	Ø 20,64	Ch -30209024, +ABS
	-02				**PF268**	Bdx	Ø 23,81	Ch 08576-, Alu, +ABS
	94-02				**PF213**	Bdx	Ø 20,64	Alu, -ABS, LHD/RHD
	97-02				**PF267**	Bdx	Ø 20,64	Alu, -ABS
	-96				**PF202**		Ø 22,20	Ch 30209025-, +ABS
1.8 16v Eng.LFY(XU7JP4) (81kW)	-02				**PF274**	Bch	Ø 22,20	Ch -08575, Alu, +ABS
	00-				**PF268**	Bdx	Ø 23,81	Ch 08576-, Alu, +ABS

PEUGEOT

		Spare Parts	F/R	L/R	FRITECH ref.		DIMENSIONS mm.	NOTE
2.0 Eng.RFX(XU10J2) (89kW)	5/97-				**PF243**	Ate	Ø 22,20	Ch -08575, Alu, +ABS
	94-4/97				**PF195**	Ate	Ø 20,64	-ABS
	5/97-02				**PF269**	Ate	Ø 22,20	Alu, -ABS
	4/97-				**PF274**	Bch	Ø 22,20	Ch -08575, Alu, +ABS
	-02				**PF268**	Bdx	Ø 23,81	Ch 08576-, Alu, +ABS
	94-4/97				**PF202**		Ø 22,20	+ABS
2.0 16v Eng.RFV(XU10J4R) (97kW)	5/97-				**PF243**	Ate	Ø 22,20	Ch -08575, Alu, +ABS
	5/97-02				**PF269**	Ate	Ø 22,20	Alu, -ABS
	97-				**PF274**	Bch	Ø 22,20	Ch -08575, Alu, +ABS
	-02				**PF268**	Bdx	Ø 23,81	Ch 08576-, Alu, +ABS
	3/97-4/97				**PF202**		Ø 22,20	+ABS
306 (7E) Break 5/93-5/01								
1.4 SL Eng.KFW/KFX(TU3JP)/ KDX(TU3MC)	93-		R		**CF134**	Bdx	Ø 22,00	+ABS
(55kW)	93-		R		**CF133**	Bdx	Ø 20,64	-ABS
	4/97-				**PF243**	Ate	Ø 22,20	Ch -08575, Alu, +ABS, -ESP
	93-				**PF269**	Ate	Ø 22,20	Alu, -ABS
	93-				**PF268**	Bdx	Ø 23,81	Alu, +ABS
1.6 Eng.NFT (72kW)	00-02		R		**CF134**	Bdx	Ø 22,00	+ABS
	00-02		R		**CF133**	Bdx	Ø 20,64	-ABS
	00-				**PF269**	Ate	Ø 22,20	Alu, -ABS
	00-				**PF268**	Bdx	Ø 23,81	Alu, +ABS
1.6 SR Eng.NFZ(TU5JP) (65kW)	93-00		R		**CF134**	Bdx	Ø 22,00	+ABS
	93-00		R		**CF133**	Bdx	Ø 20,64	-ABS
	4/97-8/00				**PF269**	Ate	Ø 22,20	Alu, -ABS
	93-00				**PF268**	Bdx	Ø 23,81	Alu, +ABS
1.8 Eng.LFZ(XU7JP) (74kW)	93-02		R		**CF134**	Bdx	Ø 22,00	+ABS
	93-02				**PF268**	Bdx	Ø 23,81	Alu, +ABS
	93-02				**PF272**	Bdx	Ø 23,81	Ch -09001, Alu, -ABS
1.8 16v Eng.LFY(XU7JP4) (81kW)	97-02				**PF268**	Bdx	Ø 23,81	Alu, +ABS
	97-02				**PF272**	Bdx	Ø 23,81	Ch -09001, Alu, -ABS
1.8 D Eng.A9A(XUD7) (43kW)	93-02		R		**CF134**	Bdx	Ø 22,00	+ABS
	93-02		R		**CF133**	Bdx	Ø 20,64	-ABS
	93-02				**PF269**	Ate	Ø 22,20	Alu, -ABS
	93-02				**PF268**	Bdx	Ø 23,81	Alu, +ABS
1.8i Eng.L6A(XU7P/ K) (69kW)	93-00		R		**CF134**	Bdx	Ø 22,00	+ABS
	93-00				**PF268**	Bdx	Ø 23,81	Alu, +ABS
	93-00				**PF272**	Bdx	Ø 23,81	Ch -09001, Alu, -ABS
1.9 D Eng.DHV(XUD9BSD) (55kW)	98-02		R		**CF134**	Bdx	Ø 22,00	+ABS
	98-02		R		**CF133**	Bdx	Ø 20,64	-ABS
	98-02				**PF269**	Ate	Ø 22,20	Alu, -ABS
	98-02				**PF268**	Bdx	Ø 23,81	Alu, +ABS
1.9 D Eng.WJZ/ WJY(DW8/ B) (51kW)	98-		R		**CF134**	Bdx	Ø 22,00	+ABS
	98-8/00		R		**CF133**	Bdx	Ø 20,64	-ABS
	98-02				**PF269**	Ate	Ø 22,20	Alu, -ABS
	98-02				**PF268**	Bdx	Ø 23,81	Alu, +ABS
1.9 SLD Eng.DJY(XUD9A) (50-51kW)	94-02		R		**CF134**	Bdx	Ø 22,00	+ABS
	94-02		R		**CF133**	Bdx	Ø 20,64	-ABS
	3/93-4/97				**PF195**	Ate	Ø 20,64	-ABS
	94-02				**PF269**	Ate	Ø 22,20	Alu, -ABS
	94-02				**PF268**	Bdx	Ø 23,81	Alu, +ABS
1.9 TD Eng.DHY(XUD9TE) (66-68kW)	93-02		R		**CF134**	Bdx	Ø 22,00	+ABS
	93-02				**PF269**	Ate	Ø 22,20	Alu, -ABS
	93-02				**PF268**	Bdx	Ø 23,81	Alu, +ABS
	93-02				**PF272**	Bdx	Ø 23,81	Ch -09001, Alu, -ABS
2.0 16v Eng.RFV(XU10J4R) (97kW)	97-02				**PF268**	Bdx	Ø 23,81	Alu, +ABS
	97-02				**PF272**	Bdx	Ø 23,81	Ch -09001, Alu, -ABS
2.0 HDi Eng.RHY(DW10TD) (66kW)	99-02				**PF268**	Bdx	Ø 23,81	Alu, +ABS
	99-02				**PF272**	Bdx	Ø 23,81	Ch -09001, Alu, -ABS
307 I (3A/C/E), SW 8/00-6/05								
1.4 Eng.KFW(TU3JP) (55kW)	00-				**PF798**	Bch	Ø 23,81	Alu, +ABS, +ESP
	00-				**CZ104**	Fte	Ø 19,05	Pla
	00-				**PZ116**	Fte	Ø 15,87	Pla
1.4 16v Eng.KFU(ET3J4) (65kW)	00-				**PF798**	Bch	Ø 23,81	Alu, +ABS, +ESP
	00-				**CZ104**	Fte	Ø 19,05	Pla

		Spare Parts	F/R	L/R	FRITECH ref.		DIMENSIONS mm.	NOTE
1.4 16v Eng.KFU(ET3J4) (65kW)	00-				**PZ116**	Fte	Ø 15,87	Pla
1.6 16v, Cabrio Eng.NFU(TU5JP4) (80-87kW)	00-				**PF798**	Bch	Ø 23,81	Alu, +ABS, +ESP
	00-				**CZ104**	Fte	Ø 19,05	Pla
	00-				**PZ116**	Fte	Ø 15,87	Pla
1.6 HDi 16v FAP Eng.7HZ(DV6TED4) (80kW)	2/04-				**PF798**	Bch	Ø 23,81	Alu, +ABS, +ESP
2.0 16v Eng.RFN(EW10J4) (100kW)	00-				**PF798**	Bch	Ø 23,81	Alu, +ABS, +ESP
	00-				**CZ103**	Fte	Ø 19,05	Pla
	00-				**PZ115**	Fte	Ø 15,87	Pla
2.0 HDi Eng.RHY(DW10TD) (66kW)	00-				**CZ103**	Fte	Ø 19,05	Pla
	00-				**PZ115**	Fte	Ø 15,87	Pla
2.0 HDi 16v, Cabrio Eng.RHR(DW10BTED4)	03-				**PF798**	Bch	Ø 23,81	Alu, +ABS, +ESP
(100kW)	03-				**CZ103**	Fte	Ø 19,05	Pla
	03-				**PZ115**	Fte	Ø 15,87	Pla
2.0 HDi FAP Eng.RHS(DW10ATED4) (79kW)	00-				**CZ103**	Fte	Ø 19,05	Pla
2.0, Cabrio Eng.RFK(EW10J4S) (130kW)	03-05				**PF798**	Bch	Ø 23,81	Alu, +ABS, +ESP
	03-05				**CZ103**	Fte	Ø 19,05	Pla
307 II, SW 7/05-12/08								
1.4 16v Eng.KFU(ET3J4) (65kW)	05-				**PF798**	Bch	Ø 23,81	Alu, +ABS, +ESP
1.6 16v, Cabrio Eng.NFU(TU5JP4) (80-87kW)	05-				**PF798**	Bch	Ø 23,81	Alu, +ABS, +ESP
	05-				**PZ116**	Fte	Ø 15,87	Pla
1.6 HDi 16v Eng.DV6ATED4 (66kW)	05-				**PF798**	Bch	Ø 23,81	Alu, +ABS, +ESP
	05-				**CZ103**	Fte	Ø 19,05	Pla
	05-				**PZ115**	Fte	Ø 15,87	Pla, LHD
1.6 HDi 16v FAP Eng.9HZ(DV6TED4) (80kW)	05-				**PF798**	Bch	Ø 23,81	Alu, +ABS, +ESP
2.0 16v Eng.RFJ(EW10A) (103kW)	05-				**PF798**	Bch	Ø 23,81	Alu, +ABS, +ESP
	05-				**CZ103**	Fte	Ø 19,05	Pla
	05-				**PZ115**	Fte	Ø 15,87	Pla, LHD
2.0 16v, Cabrio Eng.RFK(EW10J4S) (130kW)	05-				**PF798**	Bch	Ø 23,81	Alu, +ABS, +ESP
	05-				**CZ103**	Fte	Ø 19,05	Pla
	05-				**PZ115**	Fte	Ø 15,87	Pla, LHD
2.0 HDi 16v, Cabrio Eng.RHR(DW10BTED4)	05-				**PF798**	Bch	Ø 23,81	Alu, +ABS, +ESP
(100kW)	05-				**PZ115**	Fte	Ø 15,87	Ch 11193-, Pla
308 I Coupe, Cabrio 6/09-12/14								
1.6 16v Eng.5FT(EP6DT) (103kW)	09-				**PF798**	Bch	Ø 23,81	Alu, +ABS, +ESP
	09-				**CZ103**	Fte	Ø 19,05	Ch 11460-, Pla
	09-				**PZ115**	Fte	Ø 15,87	Ch -11459, Pla, M/T
1.6 16v Eng.5FW(EP6) (88kW)	09-				**PF798**	Bch	Ø 23,81	Alu, +ABS, +ESP
	09-				**CZ103**	Fte	Ø 19,05	Pla
	09-				**PZ115**	Fte	Ø 15,87	Ch -11459, Pla, M/T
1.6 16v Eng.5FX(EP6DT) (110kW)	09-				**PF798**	Bch	Ø 23,81	Alu, +ABS, +ESP
	09-				**CZ103**	Fte	Ø 19,05	Ch 11460-, Pla
1.6 16v Cabrio Eng.5FV(EP6CDT) (115kW)	09-				**PF798**	Bch	Ø 23,81	Alu, +ABS, +ESP
1.6 8v HDi Eng.9HR(DV6C) (82kW)	11-				**PF798**	Bch	Ø 23,81	Alu, +ABS, +ESP
2.0 HDi Eng.RHE(DW10CTED4) (120kW)	09-				**PF798**	Bch	Ø 23,81	Alu, +ABS, +ESP
2.0 HDi Eng.RHR(DW10BTED4) (100kW)	09-				**PF798**	Bch	Ø 23,81	Alu, +ABS, +ESP
	09-				**PZ115**	Fte	Ø 15,87	Ch -11759, Pla
2.0 HDi Eng.RHR(DW10BTED4) (103kW)	09-				**PF798**	Bch	Ø 23,81	Alu, +ABS, +ESP
	09-				**PZ115**	Fte	Ø 15,87	Ch -11759, Pla
308 I, SW 10/07-8/13								
1.4 16v Eng.5FD(EP3) (70kW)	07-				**PF798**	Bch	Ø 23,81	Alu, +ABS, +ESP
	07-				**PF873**	Bch	Ø 23,81	Alu, +ABS, -ESP
	07-				**PZ115**	Fte	Ø 15,87	Ch -11459, Pla
1.4 16v Vti Eng.8FR(EP3C) (72kW)	10-				**PF798**	Bch	Ø 23,81	Alu, +ABS, +ESP
1.6 16v Eng.5FT(EP6DT) (103kW)	07-				**PF798**	Bch	Ø 23,81	Alu, +ABS, +ESP
1.6 16v Eng.5FW(EP6) (88kW)	07-				**PF798**	Bch	Ø 23,81	Alu, +ABS, +ESP
	07-				**PF873**	Bch	Ø 23,81	Alu, +ABS, -ESP
	07-				**PZ115**	Fte	Ø 15,87	Ch -11459, Pla
1.6 16v Eng.5FX(EP6DT) (110kW)	07-				**PF798**	Bch	Ø 23,81	Alu, +ABS, +ESP
	07-				**PF873**	Bch	Ø 23,81	Alu, +ABS, -ESP
1.6 16v Eng.5FY(EP6DTS) (128kW)	07-				**PF798**	Bch	Ø 23,81	Alu, +ABS, +ESP
1.6 16v THP Eng.5FV(EP6CDT) (115kW)	10-				**PF798**	Bch	Ø 23,81	Alu, +ABS, +ESP
1.6 Bioflex Eng.NFU(TU5JP4) (82kW)	09-				**PF798**	Bch	Ø 23,81	Alu, +ABS, +ESP
1.6 HDi Eng.9HP(DV6DTED) (68kW)	09-				**PF798**	Bch	Ø 23,81	Alu, +ABS, +ESP
	09-				**PF873**	Bch	Ø 23,81	Alu, +ABS, -ESP

PEUGEOT

		Spare Parts	F/R	L/R	FRITECH ref.		DIMENSIONS mm.	NOTE
1.6 HDi 16v Eng.9HV(DV6ATED4) (66kW)	07-				**PF798**	Bch	Ø 23,81	Alu, +ABS, +ESP
	07-				**PF873**	Bch	Ø 23,81	Alu, +ABS, -ESP
	07-				**PZ115**	Fte	Ø 15,87	Ch -11459, Pla
1.6 HDi 16v FAP Eng.9HZ(DV6TED4) (80kW)	07-				**PF798**	Bch	Ø 23,81	Alu, +ABS, +ESP
	07-				**PF873**	Bch	Ø 23,81	Alu, +ABS, -ESP
	07-				**PZ115**	Fte	Ø 15,87	Ch -11459, Pla
1.6 HDi 8v Eng.9HR(DV6C) (82kW)	10-				**PF798**	Bch	Ø 23,81	Alu, +ABS, +ESP
2.0 HDi Eng.DW10CTED4 (110kW)	11-				**PF798**	Bch	Ø 23,81	Alu, +ABS, +ESP
2.0 HDi Eng.RHE(DW10CTED4) (120kW)	09-				**PF798**	Bch	Ø 23,81	Alu, +ABS, +ESP
	09-				**PZ115**	Fte	Ø 15,87	Ch -11759, Pla
2.0 HDi Eng.RHR(DW10BTED4) (103kW)	10-				**PF798**	Bch	Ø 23,81	Alu, +ABS, +ESP
	10-				**PZ115**	Fte	Ø 15,87	Ch -11759, Pla
2.0 HDi 16v Eng.RHR(DW10BTED4) (100kW)	07-				**PF798**	Bch	Ø 23,81	Alu, +ABS, +ESP
	07-				**PF873**	Bch	Ø 23,81	Alu, +ABS, -ESP
	07-				**PZ115**	Fte	Ø 15,87	Ch -11759, Pla
309 I (10C, 10A) 10/85-12/89								
1.1 Eng.E1/ A (40kW)	9/85-6/89		R	L	**CF014**	Bdx	Ø 17,46	
	9/85-6/89		R	R	**CF015**	Bdx	Ø 17,46	
	9/85-6/89				**PF008**	Ate	Ø 19,00	-ABS
1.3 Eng.G1A (47kW)	9/85-6/89		R	L	**CF014**	Bdx	Ø 17,46	
	9/85-6/89		R	R	**CF015**	Bdx	Ø 17,46	
	9/85-6/89				**PF008**	Ate	Ø 19,00	-ABS
1.6 Eng.B1A(XU51C-K) (58kW)	9/85-6/89		R	L	**CF017**	Bdx	Ø 22,00	
	9/85-6/89		R	L	**CF012**	Luc	Ø 22,22	
	9/85-6/89		R	R	**CF016**	Bdx	Ø 22,00	
	9/85-6/89		R	R	**CF013**	Luc	Ø 22,22	
	9/85-6/89				**PF008**	Ate	Ø 19,00	-ABS
1.6 Eng.B6B/ 180Z(XU5J) (76kW)	85-88		R	L	**CF017**	Bdx	Ø 22,00	
	85-88		R	L	**CF012**	Luc	Ø 22,22	
	85-88		R	R	**CF016**	Bdx	Ø 22,00	
	85-88		R	R	**CF013**	Luc	Ø 22,22	
	85-88				**PF008**	Ate	Ø 19,00	-ABS
1.6 Eng.J2 (69kW)	86-89		R	L	**CF017**	Bdx	Ø 22,00	
	86-89		R	L	**CF012**	Luc	Ø 22,22	
	86-89		R	R	**CF016**	Bdx	Ø 22,00	
	86-89		R	R	**CF013**	Luc	Ø 22,22	
	86-89				**PF008**	Ate	Ø 19,00	-ABS
1.6, Kat Eng.B1A/ BAZ(XU51C/ CP) (55kW)	9/85-6/89		R	L	**CF017**	Bdx	Ø 22,00	
	9/85-6/89		R	L	**CF012**	Luc	Ø 22,22	
	9/85-6/89		R	R	**CF016**	Bdx	Ø 22,00	
	9/85-6/89		R	R	**CF013**	Luc	Ø 22,22	
	9/85-6/89				**PF008**	Ate	Ø 19,00	-ABS
1.9 Eng.DFZ(XU9J1) (72kW)	86-89		R	L	**CF017**	Bdx	Ø 22,00	
	86-89		R	L	**CF012**	Luc	Ø 22,22	
	86-89		R	R	**CF016**	Bdx	Ø 22,00	
	86-89		R	R	**CF013**	Luc	Ø 22,22	
	86-89				**PF008**	Ate	Ø 19,00	-ABS
1.9 D Eng.162/ D9A(XUD9)/ DJZ(XUD9Y) (47kW)	86-89		R	L	**CF017**	Bdx	Ø 22,00	
	86-89		R	L	**CF012**	Luc	Ø 22,22	
	86-89		R	R	**CF016**	Bdx	Ø 22,00	
	86-89		R	R	**CF013**	Luc	Ø 22,22	
	86-89				**PF008**	Ate	Ø 19,00	-ABS
1.9 GTi Eng.D6B(XU9JA/ Z/ 2C/ S) (88-94-96kW)	86-89				**PF007**	Ate	Ø 20,64	
1.9 GTI Eng.DKZ(XU9JA/ Z/ 2C/ S) (77-88-96kW)	88-89				**PF007**	Ate	Ø 20,64	
309 II (3A/C) 7/89-12/93								
1.1 Eng.HDZ(TU1M/ MZ) (44kW)	90-93		R	L	**CF048**	Bdx	Ø 20,64	CRCI, -ABS
	90-93		R	L	**CF063**	Luc	Ø 20,64	CRCI, -ABS
	90-93		R	R	**CF049**	Bdx	Ø 20,64	CRCI, -ABS
	90-93		R	R	**CF064**	Luc	Ø 20,64	CRCI, -ABS
	90-93		R		**CF104**	Luc	Ø 20,64	+ABS
	90-93				**PF008**	Ate	Ø 19,00	-ABS
	90-93				**PF131**	Bdx	Ø 20,64	+ABS

		Spare Parts	F/R	L/R	FRITECH ref.		DIMENSIONS mm.	NOTE
1.4 Eng.K1D(TU3A/ AN/ S/ M/ 2/ 2K/ MC)	90-93		R	L	**CF048**	Bdx	Ø 20,64	CRCI, -ABS
(47-49-55kW)	90-93		R	L	**CF063**	Luc	Ø 20,64	CRCI, -ABS
	90-93		R	R	**CF049**	Bdx	Ø 20,64	CRCI, -ABS
	90-93		R	R	**CF064**	Luc	Ø 20,64	CRCI, -ABS
	90-93		R		**CF104**	Luc	Ø 20,64	+ABS
	90-93				**PF008**	Ate	Ø 19,00	-ABS
	90-93				**PF131**	Bdx	Ø 20,64	+ABS
1.4 Eng.KDY/ KDZ(TU3A/ AN/ S/ M/ 2/ 2K/ MC/ F2)	89-93		R	L	**CF048**	Bdx	Ø 20,64	CRCI, -ABS
(47-55kW)	89-93		R	L	**CF063**	Luc	Ø 20,64	CRCI, -ABS
	89-93		R	R	**CF049**	Bdx	Ø 20,64	CRCI, -ABS
	89-93		R	R	**CF064**	Luc	Ø 20,64	CRCI, -ABS
	89-93		R		**CF104**	Luc	Ø 20,64	+ABS
	89-93				**PF008**	Ate	Ø 19,00	-ABS
	89-93				**PF131**	Bdx	Ø 20,64	+ABS
1.6 Eng.B2A(XU52C-K) (68-69kW)	89-93		R	L	**CF048**	Bdx	Ø 20,64	CRCI, -ABS
	89-93		R	L	**CF063**	Luc	Ø 20,64	CRCI, -ABS
	89-93		R	R	**CF049**	Bdx	Ø 20,64	CRCI, -ABS
	89-93		R	R	**CF064**	Luc	Ø 20,64	CRCI, -ABS
	89-93		R		**CF104**	Luc	Ø 20,64	+ABS
	89-93				**PF008**	Ate	Ø 19,00	-ABS
	89-93				**PF131**	Bdx	Ø 20,64	+ABS
1.6 Eng.BDY(XU5M2Z/ 3Z)/ BDZ(XU5M) (65kW)	89-93		R	L	**CF048**	Bdx	Ø 20,64	CRCI, -ABS
	89-93		R	L	**CF063**	Luc	Ø 20,64	CRCI, -ABS
	89-93		R	R	**CF049**	Bdx	Ø 20,64	CRCI, -ABS
	89-93		R	R	**CF064**	Luc	Ø 20,64	CRCI, -ABS
	89-93		R		**CF104**	Luc	Ø 20,64	+ABS
	89-93				**PF008**	Ate	Ø 19,00	-ABS
	89-93				**PF131**	Bdx	Ø 20,64	+ABS
1.8 D Eng.161A(XUD7) (44kW)	89-93		R	L	**CF048**	Bdx	Ø 20,64	CRCI, -ABS
	89-93		R	L	**CF063**	Luc	Ø 20,64	CRCI, -ABS
	89-93		R	R	**CF049**	Bdx	Ø 20,64	CRCI, -ABS
	89-93		R	R	**CF064**	Luc	Ø 20,64	CRCI, -ABS
	89-93		R		**CF104**	Luc	Ø 20,64	+ABS
	89-93				**PF008**	Ate	Ø 19,00	-ABS
	89-93				**PF131**	Bdx	Ø 20,64	+ABS
1.8 TD Eng.A8B(XUD7TE) (57-66kW)	89-93		R	L	**CF048**	Bdx	Ø 20,64	CRCI, -ABS
	89-93		R	L	**CF063**	Luc	Ø 20,64	CRCI, -ABS
	89-93		R	R	**CF049**	Bdx	Ø 20,64	CRCI, -ABS
	89-93		R	R	**CF064**	Luc	Ø 20,64	CRCI, -ABS
	89-93		R		**CF104**	Luc	Ø 20,64	+ABS
	89-93				**PF008**	Ate	Ø 19,00	-ABS
	89-93				**PF131**	Bdx	Ø 20,64	+ABS
1.9 Eng.DDZ(XU9M) (80kW)	89-92				**PF007**	Ate	Ø 20,64	-ABS
	9/90-12/92				**PF201**	Bdx	Ø 20,64	+ABS
1.9 Eng.DFZ(XU9J1) (72kW)	89-93		R	L	**CF048**	Bdx	Ø 20,64	CRCI, -ABS
	89-93		R	L	**CF063**	Luc	Ø 20,64	CRCI, -ABS
	89-93		R	R	**CF049**	Bdx	Ø 20,64	CRCI, -ABS
	89-93		R	R	**CF064**	Luc	Ø 20,64	CRCI, -ABS
	89-93		R		**CF104**	Luc	Ø 20,64	+ABS
	89-93				**PF008**	Ate	Ø 19,00	-ABS
	89-93				**PF131**	Bdx	Ø 20,64	+ABS
1.9 D Eng.162/ D9A(XUD9)/ DJZ(XUD9Y) (47kW)	89-93		R	L	**CF048**	Bdx	Ø 20,64	CRCI, -ABS
	89-93		R	L	**CF063**	Luc	Ø 20,64	CRCI, -ABS
	89-93		R	R	**CF049**	Bdx	Ø 20,64	CRCI, -ABS
	89-93		R	R	**CF064**	Luc	Ø 20,64	CRCI, -ABS
	89-93		R		**CF104**	Luc	Ø 20,64	+ABS
	89-93				**PF008**	Ate	Ø 19,00	-ABS
	89-93				**PF131**	Bdx	Ø 20,64	+ABS
1.9 GTI Eng.DKZ(XU9JA/ Z) (88kW)	89-93				**PF007**	Ate	Ø 20,64	-ABS
	89-93				**PF201**	Bdx	Ø 20,64	+ABS
1.9 Sport MI-16 Eng.D6C(XU9J4) (116-118kW)	89-90				**PF007**	Ate	Ø 20,64	-ABS
	89-90				**PF201**	Bdx	Ø 20,64	+ABS
1.9 Sport MI-16 Eng.DFW(XU9J4Z) (108kW)	90-93				**PF007**	Ate	Ø 20,64	-ABS
	90-93				**PF201**	Bdx	Ø 20,64	+ABS

		Spare Parts	F/R	L/R	FRITECH ref.		DIMENSIONS mm.	NOTE
404 4/63-12/71								
1.6, GT, Cabrio Eng.XC5/ 6/ P/ KF1/ 2	63-71		F		**CF449**	Bdx	Ø 30,00	
(48-50-54-59kW)	63-71		R	L	**CF447**	Bdx	Ø 28,57	Exc. L, LD
	63-71		R	R	**CF448**	Bdx	Ø 28,57	Exc. L, LD
	63-71				**CZ019**		Ø 28,60	
Thermostable	63-71		R		**CF338**	Bdx	Ø 19,05	
405 I (15B) 1/87-12/93								
1.4 Eng.KDY(TU3A/ AN/ S/ M/ 2/ 2K) (47kW)	87-92		R	L	**CF046**	Bdx	Ø 20,64	CRCI
	87-92		R	R	**CF047**	Bdx	Ø 20,64	CRCI
	87-92				**PF114**		Ø 20,64	-ABS
1.6 Eng.B1E(XU51C) (53kW)	87-92		R	L	**CF046**	Bdx	Ø 20,64	CRCI
	87-92		R	R	**CF047**	Bdx	Ø 20,64	CRCI
	87-92				**PF114**		Ø 20,64	-ABS
	87-92				**PF035**		Ø 20,64	
1.6 Eng.B2A(XU52C)/ S (66-69kW)	87-92		R	L	**CF046**	Bdx	Ø 20,64	CRCI
	87-92		R	R	**CF047**	Bdx	Ø 20,64	CRCI
	87-92				**PF114**		Ø 20,64	-ABS
	87-92				**PF035**		Ø 20,64	
1.6 Eng.BAZ(XU5CP) (55kW)	87-88		R	L	**CF046**	Bdx	Ø 20,64	CRCI
	87-88		R	R	**CF047**	Bdx	Ø 20,64	CRCI
	87-88				**PF114**		Ø 20,64	-ABS
	87-88				**PF035**		Ø 20,64	
1.6, 4x4 Eng.BDY(XU5M2Z/ 3Z)/ BDZ(XU5M)	87-92		R	L	**CF046**	Bdx	Ø 20,64	CRCI
(65-66-69kW)	87-92		R	R	**CF047**	Bdx	Ø 20,64	CRCI
	87-92				**PF114**		Ø 20,64	-ABS
	87-92				**PF035**		Ø 20,64	
1.8 TD Eng.A8A(XUD7TE)/ AJZ(XUD7TEY) (66kW)	88-92		R	L	**CF046**	Bdx	Ø 20,64	CRCI
	88-92		R	R	**CF047**	Bdx	Ø 20,64	CRCI
	88-92				**PF035**		Ø 20,64	
1.9 Eng.D2C(XU92C) (70kW)	87-92		R	L	**CF046**	Bdx	Ø 20,64	CRCI
	87-92		R	R	**CF047**	Bdx	Ø 20,64	CRCI
	87-92				**PF114**		Ø 20,64	-ABS
1.9 D Eng.D9B(XUD9A) (51kW)	88-92		R	L	**CF046**	Bdx	Ø 20,64	CRCI
	88-92		R	R	**CF047**	Bdx	Ø 20,64	CRCI
	88-92				**PF035**		Ø 20,64	
1.9 D Eng.DJZ(XUD9Y) (47kW)	88-92		R	L	**CF046**	Bdx	Ø 20,64	CRCI
	88-92		R	R	**CF047**	Bdx	Ø 20,64	CRCI
	88-92				**PF035**		Ø 20,64	
1.9 GRi/SRi 4WD Eng.DDZ(XU9M) (80kW)	88-92		R	L	**CF046**	Bdx	Ø 20,64	CRCI
	88-92		R	R	**CF047**	Bdx	Ø 20,64	CRCI
	88-92				**PF035**		Ø 20,64	
1.9 GTi Eng.DKZ(XU9JA/ Z/ 2C/ S) (88-96kW)	88-92		R	L	**CF046**	Bdx	Ø 20,64	CRCI
	88-92		R	R	**CF047**	Bdx	Ø 20,64	CRCI
	88-92				**PF035**		Ø 20,64	
1.9 Sport MI-16 Eng.D6C(XU9J4) (116-118kW)	87-91				**PF173**	Luc	Ø 22,20	+ABS
	87-91				**PF035**		Ø 20,64	-ABS
1.9 Sport MI-16 Eng.DFW(XU9J4Z) (108kW)	88-92				**PF173**	Luc	Ø 22,20	+ABS
	88-92				**PF035**		Ø 20,64	-ABS
1.9 Sport MI-16 4WD Eng.DFW(XU9J4Z) (108kW)	88-92				**PF173**	Luc	Ø 22,20	+ABS
	88-92				**PF035**		Ø 20,64	-ABS
1.9i Eng.DFZ(XU9J1) (77kW)	87-92		R	L	**CF046**	Bdx	Ø 20,64	CRCI
	87-92		R	R	**CF047**	Bdx	Ø 20,64	CRCI
	87-92				**PF035**		Ø 20,64	
405 I (15E) Break 1/87-12/92								
1.6 Eng.B1E(XU51C) (53kW)	87-92		R		**CF030**	Luc	Ø 20,64	+ABS
	87-92				**PF035**		Ø 20,64	-ABS
1.6 Eng.B2A(XU52C)/ S (66-69kW)	87-92		R		**CF030**	Luc	Ø 20,64	+ABS
	87-92				**PF035**		Ø 20,64	-ABS
1.6 Eng.BAZ(XU5CP) (55kW)	87-88		R		**CF030**	Luc	Ø 20,64	+ABS
	87-88				**PF035**		Ø 20,64	-ABS
1.6 Eng.BDY(XU5M2Z/ 3Z)/ BDZ(XU5M) (65-66kW)	87-92		R		**CF030**	Luc	Ø 20,64	+ABS
	87-92				**PF035**		Ø 20,64	-ABS
1.9 D Eng.D9B(XUD9A) (51kW)	88-92		R		**CF030**	Luc	Ø 20,64	+ABS
	88-92				**PF035**		Ø 20,64	-ABS

		Spare Parts	F/R	L/R	FRITECH ref.		DIMENSIONS mm.	NOTE
1.9 D Eng.DJZ(XUD9Y) (47kW)	88-92		R		**CF030**	Luc	Ø 20,64	+ABS
	88-92				**PF035**		Ø 20,64	-ABS
1.9 GRi/SRi Eng.DDZ(XU9M) (80kW)	88-92		R		**CF030**	Luc	Ø 20,64	+ABS
	88-92				**PF035**		Ø 20,64	-ABS
405 II (4B) 8/92-10/96								
1.4 Eng.KDY/ KDZ(TU3A/ AN/ S/ M/ 2/ 2K/ MC/ F2)	92-96		R	L	**CF046**	Bdx	Ø 20,64	CRCI
(47-55kW)	92-96		R	R	**CF047**	Bdx	Ø 20,64	CRCI
	92-96		R		**CF030**	Luc	Ø 20,64	+ABS
	92-96				**PF173**	Luc	Ø 22,20	+ABS
	92-96				**PF114**		Ø 20,64	-ABS
1.6 Eng.BDY(XU5M2Z/ 3Z)/ XU5JP/B2A (XU52C/K)	92-95		R	L	**CF046**	Bdx	Ø 20,64	CRCI, -ABS
(65-66-69-76-85kW)	92-95		R	R	**CF047**	Bdx	Ø 20,64	CRCI, -ABS
	92-95		R		**CF030**	Luc	Ø 20,64	+ABS
	92-95				**PF173**	Luc	Ø 22,20	+ABS
	92-95				**PF114**		Ø 20,64	-ABS
1.8 Eng.LFZ(XU7JP) (74kW)	92-95		R	L	**CF046**	Bdx	Ø 20,64	CRCI, -ABS
	92-95		R	R	**CF047**	Bdx	Ø 20,64	CRCI, -ABS
	92-95		R		**CF030**	Luc	Ø 20,64	+ABS
	92-95				**PF173**	Luc	Ø 22,20	+ABS
	92-95				**PF114**		Ø 20,64	-ABS
1.9 D Eng.DJY/D9B(XUD9A) (50kW)	94-95		R	L	**CF046**	Bdx	Ø 20,64	CRCI, -ABS
	94-95		R	R	**CF047**	Bdx	Ø 20,64	CRCI, -ABS
	94-95		R		**CF030**	Luc	Ø 20,64	+ABS
	3/93-4/97				**PF195**	Ate	Ø 20,64	-ABS
	94-95				**PF173**	Luc	Ø 22,20	+ABS
	94-95				**PF035**		Ø 20,64	-ABS
1.9 D Eng.DJZ(XUD9Y) (47kW)	92-95		R	L	**CF046**	Bdx	Ø 20,64	CRCI, -ABS
	92-95		R	R	**CF047**	Bdx	Ø 20,64	CRCI, -ABS
	92-95		R		**CF030**	Luc	Ø 20,64	+ABS
	92-95				**PF173**	Luc	Ø 22,20	+ABS
	92-95				**PF035**		Ø 20,64	-ABS
1.9 TD Eng.DHY(XUD9TE) (66-68kW)	92-95				**PF173**	Luc	Ø 22,20	+ABS
	92-95				**PF035**		Ø 20,64	-ABS
2.0 Eng.RFX(XU10J2/ 2C) (89kW)	92-95				**PF173**	Luc	Ø 22,20	+ABS
	92-95				**PF035**		Ø 20,64	-ABS
2.0 16v Eng.RFT(XU10J4) (110kW)	94-95				**PF173**	Luc	Ø 22,20	+ABS
	94-95				**PF035**		Ø 20,64	-ABS
2.0 MI-16 Eng.RFY(XU10J4Z) (112kW)	92-95				**PF173**	Luc	Ø 22,20	+ABS
	92-95				**PF035**		Ø 20,64	-ABS
2.0 T. 16 X4 Eng.RGZ(XU10J4TE-Z) (144kW)	92-95				**PF191**	Bdx	Ø 23,81	
2.0 X4 Eng.RFX(XU10J2/ 2C) (89kW)	92-95				**PF173**	Luc	Ø 22,20	+ABS
	92-95				**PF035**		Ø 20,64	-ABS
405 II (4E) Break 8/92-10/96								
1.4 Eng.KDY/ KDZ(TU3A/ AN/ S/ M/ 2/ 2K/ MC/ F2)	92-96		R		**CF030**	Luc	Ø 20,64	ABS:Bendix, +ABS
(47-55kW)	92-96		R		**CF160**	Luc	Ø 20,64	ABS:Bosch, +ABS
	92-96				**PF114**		Ø 20,64	-ABS
1.6 Eng.BDY(XU5M2Z/ 3Z)/ XU5JP	2/94-95		R		**CF160**	Luc	Ø 20,64	ABS:Bosch, +ABS
(65-66-69-76-85kW)	92-95		R		**CF030**	Luc	Ø 20,64	ABS:Bendix, +ABS
	92-95				**PF173**	Luc	Ø 22,20	+ABS
	92-2/94				**PF114**		Ø 20,64	-ABS
1.8 Eng.LFZ(XU7JP) (74kW)	92-95		R		**CF030**	Luc	Ø 20,64	ABS:Bendix, +ABS
	92-95		R		**CF160**	Luc	Ø 20,64	ABS:Bosch, +ABS
	92-95				**PF173**	Luc	Ø 22,20	+ABS
	92-95				**PF114**		Ø 20,64	-ABS
1.9 Eng.D2A(XU92C) (77kW)	2/94-96		R		**CF160**	Luc	Ø 20,64	ABS:Bosch, +ABS
	92-94		R		**CF030**	Luc	Ø 20,64	ABS:Bendix, +ABS
	92-95				**PF173**	Luc	Ø 22,20	+ABS
	92-95				**PF114**		Ø 20,64	-ABS
1.9 D Eng.DJY(XUD9A) (50-51kW)	94-95		R		**CF030**	Luc	Ø 20,64	ABS:Bendix, +ABS
	94-95		R		**CF160**	Luc	Ø 20,64	ABS:Bosch, +ABS
	94-95				**PF173**	Luc	Ø 22,20	+ABS
	94-95				**PF035**		Ø 20,64	-ABS
1.9 D Eng.DJZ(XUD9Y) (47kW)	2/94-95		R		**CF160**	Luc	Ø 20,64	ABS:Bosch, +ABS
	92-95		R		**CF030**	Luc	Ø 20,64	ABS:Bendix, +ABS

PEUGEOT

		Spare Parts	F/R	L/R	FRITECH ref.		DIMENSIONS mm.	NOTE
1.9 D Eng.DJZ(XUD9Y) (47kW)	92-95				**PF173**	Luc	Ø 22,20	+ABS
	2/94-95				**PF035**		Ø 20,64	-ABS
1.9 TD Eng.DHY(XUD9TE) (66-68kW)	92-95				**PF173**	Luc	Ø 22,20	+ABS
	92-95				**PF035**		Ø 20,64	-ABS
2.0 Eng.RFX(XU10J2/ 2C) (89kW)	92-95				**PF173**	Luc	Ø 22,20	+ABS
	92-95				**PF035**		Ø 20,64	-ABS
2.0 X4 Eng.RFX(XU10J2/ 2C) (89kW)	92-95				**PF173**	Luc	Ø 22,20	+ABS
	92-95				**PF035**		Ø 20,64	-ABS
406 (8B/E/F), Break, Coupe 11/95-5/04								
1.6 (Exc. Break) Eng.BFZ(XU5JP/ J1/ JA)	10/95-		R	L	**CF147**		Ø 20,64	+ABS
(65-76-85kW)	10/95-		R	L	**CF145**		Ø 20,64	CRCI, -ABS
	10/95-		R	R	**CF148**		Ø 20,64	+ABS
	10/95-		R	R	**CF146**		Ø 20,64	CRCI, -ABS
	-04				**PF499**	Ate	Ø 23,81	Ch 8701-, Alu, +ABS, -ESP
	2/99-				**PF275**	Bch	Ø 23,81	Ch -8700, Alu, +ABS
	4/99-				**PF575**	Bch	Ø 23,81	Ch -8700, Alu, -ABS
	10/95-1/99				**PF265**	Bdx	Ø 23,81	Alu, +ABS
	10/95-1/99				**PF271**	Bdx	Ø 23,81	Alu, -ABS
1.8 Eng.LFX(XU7JB) (66kW)	97-04		R	L	**CF147**		Ø 20,64	+ABS
	97-04		R	L	**CF145**		Ø 20,64	CRCI, -ABS
	97-04		R	R	**CF148**		Ø 20,64	+ABS
	97-04		R	R	**CF146**		Ø 20,64	CRCI, -ABS
	-04				**PF499**	Ate	Ø 23,81	Ch 8701-, Alu, +ABS, -ESP
	2/99-				**PF275**	Bch	Ø 23,81	Ch -8700, Alu, +ABS
	4/99-				**PF575**	Bch	Ø 23,81	Ch -8700, Alu, -ABS
	97-1/99				**PF265**	Bdx	Ø 23,81	Alu, +ABS
	97-1/99				**PF271**	Bdx	Ø 23,81	Alu, -ABS
1.8 16v Eng.6FZ(EW7J4) (85kW)	-04				**PF499**	Ate	Ø 23,81	Ch 8701-, Alu, +ABS, -ESP
	00-				**PF575**	Bch	Ø 23,81	Ch -8700, Alu, -ABS
	00-04				**CZ103**	Fte	Ø 19,05	Pla
1.8 16v Eng.LFY(XU7JP4) (81kW)	95-00		R	L	**CF147**		Ø 20,64	+ABS
	95-00		R	L	**CF145**		Ø 20,64	CRCI, -ABS
	95-00		R	R	**CF148**		Ø 20,64	+ABS
	95-00		R	R	**CF146**		Ø 20,64	CRCI, -ABS
	-00				**PF499**	Ate	Ø 23,81	Ch 8701-, Alu, +ABS, -ESP
	2/99-				**PF275**	Bch	Ø 23,81	Ch -8700, Alu, +ABS
	2/99-				**PF575**	Bch	Ø 23,81	Ch -8700, Alu, -ABS
	10/95-1/99				**PF265**	Bdx	Ø 23,81	Alu, +ABS
	10/95-1/99				**PF271**	Bdx	Ø 23,81	Alu, -ABS
1.9 D Eng.DHW(XUD9SD/ BSD) (55kW)	96-04		R	L	**CF147**		Ø 20,64	+ABS
	96-04		R	L	**CF145**		Ø 20,64	CRCI, -ABS
	96-04		R	R	**CF148**		Ø 20,64	+ABS
	96-04		R	R	**CF146**		Ø 20,64	CRCI, -ABS
	-04				**PF499**	Ate	Ø 23,81	Ch 8701-, Alu, +ABS, -ESP
	2/99-				**PF275**	Bch	Ø 23,81	Ch -8700, Alu, +ABS
	96-1/99				**PF265**	Bdx	Ø 23,81	Alu, +ABS
	96-1/99				**PF271**	Bdx	Ø 23,81	Alu, -ABS
1.9 TD Eng.DHX(XUD9TE) (66-68kW)	96-04		R	L	**CF147**		Ø 20,64	+ABS
	96-04		R	L	**CF145**		Ø 20,64	CRCI, -ABS
	96-04		R	R	**CF148**		Ø 20,64	+ABS
	96-04		R	R	**CF146**		Ø 20,64	CRCI, -ABS
	-04				**PF499**	Ate	Ø 23,81	Ch 8701-, Alu, +ABS, -ESP
	2/99-				**PF275**	Bch	Ø 23,81	Ch -8700, Alu, +ABS
	96-1/99				**PF265**	Bdx	Ø 23,81	Alu, +ABS
	96-1/99				**PF271**	Bdx	Ø 23,81	Alu, -ABS
1.9 TD (Exc. Break) Eng.DHY(XUD9TE) (66-68kW)	96-		R	L	**CF147**		Ø 20,64	+ABS
	96-		R	L	**CF145**		Ø 20,64	CRCI, -ABS
	96-		R	R	**CF148**		Ø 20,64	+ABS
	96-		R	R	**CF146**		Ø 20,64	CRCI, -ABS
	-04				**PF499**	Ate	Ø 23,81	Ch 8701-, Alu, +ABS, -ESP
	2/99-				**PF275**	Bch	Ø 23,81	Ch -8700, Alu, +ABS
	96-1/99				**PF265**	Bdx	Ø 23,81	Alu, +ABS
	96-1/99				**PF271**	Bdx	Ø 23,81	Alu, -ABS

		Spare Parts	F/R	L/R	FRITECH ref.		DIMENSIONS mm.	NOTE
2.0 16v HPi Eng.RLZ(EW10D) (103kW)	-04				**PF499**	Ate	Ø 23,81	Ch 8701-, Alu, +ABS, -ESP
	01-				**PF575**	Bch	Ø 23,81	Ch -8700, Alu, -ABS
	01-				**CZ103**	Fte	Ø 19,05	Pla
2.0 16v, Coupe Eng.RFN(EW10J4) (100kW)	-04				**PF499**	Ate	Ø 23,81	Ch 8701-, Alu, +ABS, -ESP
	00-				**PF575**	Bch	Ø 23,81	Ch -8700, Alu, -ABS
	00-				**CZ103**	Fte	Ø 19,05	Pla
2.0 16v, Coupe Eng.RFR(DEW10J4) (99kW)	-00				**PF499**	Ate	Ø 23,81	Ch 8701-, Alu, +ABS, -ESP
	2/99-				**PF275**	Bch	Ø 23,81	Ch -8700, Alu, +ABS
	4/99-				**PF575**	Bch	Ø 23,81	Ch -8700, Alu, -ABS
	99-				**CZ103**	Fte	Ø 19,05	Pla
2.0 16v, Coupe Eng.RFV(XU10J4R) (97kW)	-04				**PF499**	Ate	Ø 23,81	Ch 8701-, Alu, +ABS, -ESP
	4/99-				**PF575**	Bch	Ø 23,81	Ch -8700, Alu, -ABS
2.0 HDi Eng.RHY(DW10TD) (66kW)	10/95-		R	L	**CF147**		Ø 20,64	+ABS
	10/95-		R	L	**CF145**		Ø 20,64	CRCI, -ABS
	10/95-		R	R	**CF148**		Ø 20,64	+ABS
	10/95-		R	R	**CF146**		Ø 20,64	CRCI, -ABS
	-04				**PF499**	Ate	Ø 23,81	Ch 8701-, Alu, +ABS, -ESP
	2/99-				**PF275**	Bch	Ø 23,81	Ch -8700, Alu, +ABS
	4/99-				**PF575**	Bch	Ø 23,81	Ch -8700, Alu, -ABS
	99-				**CZ103**	Fte	Ø 19,05	Pla
2.0 HDi Eng.RHZ(DW10ATED) (80kW)	-04				**PF499**	Ate	Ø 23,81	Ch 8701-, Alu, +ABS, -ESP
	2/99-				**PF275**	Bch	Ø 23,81	Ch -8700, Alu, +ABS
	4/99-				**PF575**	Bch	Ø 23,81	Ch -8700, Alu, -ABS
2.0 HDi FAP Eng.RHS(DW10ATED4) (79kW)	-04				**PF499**	Ate	Ø 23,81	Ch 8701-, Alu, +ABS, -ESP
	01-				**PF275**	Bch	Ø 23,81	Ch -8700, Alu, +ABS
2.0 T. Eng.RGX(XU10J2TE) (108kW)	-04				**PF499**	Ate	Ø 23,81	Ch 8701-, Alu, +ABS, -ESP
	2/99-				**PF275**	Bch	Ø 23,81	Ch -8700, Alu, +ABS
	96-1/99				**PF265**	Bdx	Ø 23,81	Alu, +ABS
	96-1/99				**PF271**	Bdx	Ø 23,81	Alu, -ABS
2.1 TD 12v Eng.PHZ/ P8C(XUD11ATE/ BTE)	-04				**PF499**	Ate	Ø 23,81	Ch 8701-, Alu, +ABS, -ESP
(80kW)	2/99-				**PF275**	Bch	Ø 23,81	Ch -8700, Alu, +ABS
	96-1/99				**PF265**	Bdx	Ø 23,81	Alu, +ABS
	96-1/99				**PF271**	Bdx	Ø 23,81	Alu, -ABS
2.2 HDi, Coupe Eng.4HX(DW12TED4-FAP)	-04				**PF499**	Ate	Ø 23,81	Ch 8701-, Alu, +ABS, -ESP
(94-98kW)	00-				**PF575**	Bch	Ø 23,81	Ch -8700, Alu, -ABS
2.2, Coupe Eng.3FZ(EW12J4) (116kW)	-04				**PF499**	Ate	Ø 23,81	Ch 8701-, Alu, +ABS, -ESP
	00-				**PF575**	Bch	Ø 23,81	Ch -8700, Alu, -ABS
	00-04				**CZ103**	Fte	Ø 19,05	Pla, G.Box ML5C
3.0 V6 12v, Coupe Eng.XFZ(ES9J4) (140kW)	-04				**PF499**	Ate	Ø 23,81	Ch 8701-, Alu, +ABS, -ESP
	2/99-				**PF275**	Bch	Ø 23,81	Ch -8700, Alu, +ABS
	4/99-				**PF575**	Bch	Ø 23,81	Ch -8700, Alu, -ABS
	96-1/99				**PF265**	Bdx	Ø 23,81	Alu, +ABS
	96-1/99				**PF271**	Bdx	Ø 23,81	Alu, -ABS
3.0 V6 24v, Coupe Eng.XFX(ES9J4S) (152kW)	-04				**PF499**	Ate	Ø 23,81	Ch 8701-, Alu, +ABS, -ESP
	00-				**PF575**	Bch	Ø 23,81	Ch -8700, Alu, -ABS
407 I, SW (6D/E/C) 5/04-9/08								
1.6 HDi 16v FAP Eng.9HZ(DV6TED4) (80kW)	04-				**CZ103**	Fte	Ø 19,05	Pla
1.8 16v Eng.6FY(EW7A) (92kW)	05-				**CZ103**	Fte	Ø 19,05	Pla
1.8 16v Eng.6FZ(EW7J4) (85kW)	04-				**CZ103**	Fte	Ø 19,05	Pla
2.0 16v Eng.RFJ(EW10A) (103kW)	05-08				**CZ103**	Fte	Ø 19,05	Pla
2.0 16v Eng.RFN(EW10J4) (100kW)	04-08				**CZ103**	Fte	Ø 19,05	Pla
2.0 HDi 16v, Coupe Eng.RHR(DW10BTED4) (100kW)	04-				**CZ103**	Fte	Ø 19,05	Pla
2.2 16v Eng.3FZ(EW12J4) (116kW)	04-08				**CZ103**	Fte	Ø 19,05	Pla
2.2 16v, Coupe Eng.3FY(EW12J4) (120kW)	05-08				**CZ103**	Fte	Ø 19,05	Pla
504 7/68-7/86								
1.8 Eng.XM1 (60kW)	68-71		F		**CF449**	Bdx	Ø 30,00	Camionette
	68-71		R	L	**CF389**	Bdx	Ø 22,00	
	68-71		R	L	**CF447**	Bdx	Ø 28,57	Camionette
	68-71		R	L	**CF012**	Luc	Ø 22,22	
	68-71		R	L	**CF391**		Ø 22,00	Export
	68-71		R	R	**CF390**	Bdx	Ø 22,00	
	68-71		R	R	**CF448**	Bdx	Ø 28,57	Camionette
	68-71		R	R	**CF013**	Luc	Ø 22,22	
	68-71		R	R	**CF392**		Ø 22,00	Export

PEUGEOT

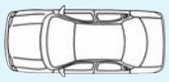		Spare Parts	F/R	L/R	FRITECH ref.		DIMENSIONS mm.	NOTE
1.8 Eng.XM1 (60kW)	68-71				**PF292**		Ø 19,05	
	-71				**PF022**		Ø 20,64	Ch 3597843-
	68-71				**PZ024**		Ø 19,05	
1.8 Eng.XM7 (58kW)	71-83		F		**CF449**	Bdx	Ø 30,00	Camionette
	71-83		R	L	**CF389**	Bdx	Ø 22,00	
	71-9/81		R	L	**CF447**	Bdx	Ø 28,57	Camionette
	71-83		R	L	**CF012**	Luc	Ø 22,22	
	71-83		R	L	**CF391**		Ø 22,00	Export
	71-83		R	R	**CF390**	Bdx	Ø 22,00	
	71-9/81		R	R	**CF448**	Bdx	Ø 28,57	Camionette
	71-83		R	R	**CF013**	Luc	Ø 22,22	
	71-83		R	R	**CF392**		Ø 22,00	Export
	10/81-83		R		**CF089**	Luc	Ø 22,20	Camionette
	71-77				**PF292**		Ø 19,05	
	-83				**PF022**		Ø 20,64	Ch 3597843-
	7/77-83				**PF084**		Ø 20,64	Coupè, Cabrio, Camionette, -Servo
	71-83				**PF115**		Ø 20,64	Camionette, +Servo
	71-83				**PZ024**		Ø 19,05	
1.8i Eng.KF5/ KF6 (71kW)	68-71		F		**CF449**	Bdx	Ø 30,00	Camionette
	68-71		R	L	**CF389**	Bdx	Ø 22,00	
	68-71		R	L	**CF447**	Bdx	Ø 28,57	Camionette
	68-71		R	L	**CF012**	Luc	Ø 22,22	
	68-71		R	L	**CF391**		Ø 22,00	Export
	68-71		R	R	**CF390**	Bdx	Ø 22,00	
	68-71		R	R	**CF448**	Bdx	Ø 28,57	Camionette
	68-71		R	R	**CF013**	Luc	Ø 22,22	
	68-71		R	R	**CF392**		Ø 22,00	Export
	68-71				**PF292**		Ø 19,05	
	-71				**PF022**		Ø 20,64	Ch 3597843-
	68-71				**PZ024**		Ø 19,05	
1.9 D Eng.XD4x88 (37-40kW)	6/79-7/81		F		**CF449**	Bdx	Ø 30,00	Camionette
	73-86		R	L	**CF389**	Bdx	Ø 22,00	
	6/79-9/81		R	L	**CF447**	Bdx	Ø 28,57	Camionette
	73-86		R	L	**CF012**	Luc	Ø 22,22	
	76-86		R	L	**CF391**		Ø 22,00	Export
	75-86		R	R	**CF390**	Bdx	Ø 22,00	
	6/79-9/81		R	R	**CF448**	Bdx	Ø 28,57	Camionette
	73-86		R	R	**CF013**	Luc	Ø 22,22	
	76-86		R	R	**CF392**		Ø 22,00	Export
	10/81-		R		**CF089**	Luc	Ø 22,20	Camionette
	4/73-77				**PF292**		Ø 19,05	
	-86				**PF022**		Ø 20,64	Ch 3597843-
	7/81-				**PF115**		Ø 20,64	Camionette, +Servo
	77-86				**PF084**		Ø 20,64	Coupè, Cabrio, Camionette, -Servo
					CZ019		Ø 28,60	Ch -1974190, XD88
	73-86				**PZ024**		Ø 19,05	
2.0 Eng.106(XN1/ A/ P/ T) (71kW)	6/79-7/81		F		**CF449**	Bdx	Ø 30,00	Camionette
	71-86		R	L	**CF389**	Bdx	Ø 22,00	
	6/79-9/81		R	L	**CF447**	Bdx	Ø 28,57	Camionette
	71-86		R	L	**CF012**	Luc	Ø 22,22	
	71-86		R	L	**CF391**		Ø 22,00	Export
	71-86		R	R	**CF390**	Bdx	Ø 22,00	
	6/79-9/81		R	R	**CF448**	Bdx	Ø 28,57	Camionette
	71-86		R	R	**CF013**	Luc	Ø 22,22	
	71-86		R	R	**CF392**		Ø 22,00	Export
	10/81-		R		**CF089**	Luc	Ø 22,20	Camionette
	71-77				**PF292**		Ø 19,05	
	-86				**PF022**		Ø 20,64	Ch 3597843-
	7/81-				**PF115**		Ø 20,64	Camionette, +Servo
	77-86				**PF084**		Ø 20,64	Coupè, Cabrio, Camionette, -Servo
	71-86				**PZ024**		Ø 19,05	
2.0 Coupe, Cabrio Eng.106(XN1A) (75kW)	74-9/81		F		**CF449**	Bdx	Ø 30,00	Camionette
	74-82		R	L	**CF389**	Bdx	Ø 22,00	
	74-9/81		R	L	**CF447**	Bdx	Ø 28,57	Camionette

		Spare Parts	F/R	L/R	FRITECH ref.		DIMENSIONS mm.	NOTE
2.0 Coupe, Cabrio Eng.106(XN1A) (75kW)	74-82		R	L	**CF012**	Luc	Ø 22,22	
	74-82		R	L	**CF391**		Ø 22,00	Export
	74-82		R	R	**CF390**	Bdx	Ø 22,00	
	74-9/81		R	R	**CF448**	Bdx	Ø 28,57	Camionette
	74-82		R	R	**CF013**	Luc	Ø 22,22	
	74-82		R	R	**CF392**		Ø 22,00	Export
	10/81-		R		**CF089**	Luc	Ø 22,20	Camionette
	74-77				**PF292**		Ø 19,05	
	-82				**PF022**		Ø 20,64	Ch 3597843-
	7/77-				**PF084**		Ø 20,64	Coupè, Cabrio, Camionette, -Servo
	7/81-82				**PF115**		Ø 20,64	Camionette, +Servo
	11/74-82				**PZ024**		Ø 19,05	
2.0 TI, Coupe, Cabrio Eng.107(XN2) (64-78kW)	6/79-7/81		F		**CF449**	Bdx	Ø 30,00	Camionette
	71-84		R	L	**CF389**	Bdx	Ø 22,00	
	6/79-9/81		R	L	**CF447**	Bdx	Ø 28,57	Camionette
	71-84		R	L	**CF012**	Luc	Ø 22,22	
	71-84		R	L	**CF391**		Ø 22,00	Export
	71-84		R	R	**CF390**	Bdx	Ø 22,00	
	6/79-9/81		R	R	**CF448**	Bdx	Ø 28,57	Camionette
	71-84		R	R	**CF013**	Luc	Ø 22,22	
	71-84		R	R	**CF392**		Ø 22,00	Export
	10/81-		R		**CF089**	Luc	Ø 22,20	Camionette
	71-77				**PF292**		Ø 19,05	
	-84				**PF022**		Ø 20,64	Ch 3597843-
	7/77-				**PF084**		Ø 20,64	Coupè, Cabrio, Camionette, -Servo
	7/81-84				**PF115**		Ø 20,64	Camionette, +Servo
	71-84				**PZ024**		Ø 19,05	
2.1 D Eng.XD4x90 (48kW)	6/79-7/81		F		**CF449**	Bdx	Ø 30,00	Camionette
	71-86		R	L	**CF389**	Bdx	Ø 22,00	
	6/79-9/81		R	L	**CF447**	Bdx	Ø 28,57	Camionette
	71-86		R	L	**CF012**	Luc	Ø 22,22	
	71-86		R	L	**CF391**		Ø 22,00	Export
	71-86		R	R	**CF390**	Bdx	Ø 22,00	
	6/79-9/81		R	R	**CF448**	Bdx	Ø 28,57	Camionette
	71-86		R	R	**CF013**	Luc	Ø 22,22	
	71-86		R	R	**CF392**		Ø 22,00	Export
	10/81-86		R		**CF089**	Luc	Ø 22,20	Camionette
	71-77				**PF292**		Ø 19,05	
	-86				**PF022**		Ø 20,64	Ch 3597843-
	7/81-86				**PF115**		Ø 20,64	Camionette, +Servo
	77-86				**PF084**		Ø 20,64	Coupè, Cabrio, Camionette, -Servo
	71-86				**PZ024**		Ø 19,05	
2.3 D Eng.134(XD2) (51kW)	6/79-7/81		F		**CF449**	Bdx	Ø 30,00	Camionette
	75-83		R	L	**CF389**	Bdx	Ø 22,00	
	6/79-9/81		R	L	**CF447**	Bdx	Ø 28,57	Camionette
	75-83		R	L	**CF012**	Luc	Ø 22,22	
	75-83		R	L	**CF391**		Ø 22,00	Export
	75-83		R	R	**CF390**	Bdx	Ø 22,00	
	6/79-9/81		R	R	**CF448**	Bdx	Ø 28,57	Camionette
	75-83		R	R	**CF013**	Luc	Ø 22,22	
	75-83		R	R	**CF392**		Ø 22,00	Export
	10/81-83		R		**CF089**	Luc	Ø 22,20	Camionette
	75-77				**PF292**		Ø 19,05	
	-83				**PF022**		Ø 20,64	Ch 3597843-
	7/77-83				**PF084**		Ø 20,64	Coupè, Cabrio, Camionette, -Servo
	7/81-83				**PF115**		Ø 20,64	Camionette, +Servo
	75-83				**PZ024**		Ø 19,05	
2.7 Coupe Eng.140(ZMJ) (106kW)	6/79-7/81		F		**CF449**	Bdx	Ø 30,00	Camionette
	7/75-		R	L	**CF389**	Bdx	Ø 22,00	
	6/79-9/81		R	L	**CF447**	Bdx	Ø 28,57	Camionette
	4/73-		R	L	**CF012**	Luc	Ø 22,22	
	10/76-		R	L	**CF391**		Ø 22,00	Export
	7/75-		R	R	**CF390**	Bdx	Ø 22,00	
	6/79-9/81		R	R	**CF448**	Bdx	Ø 28,57	Camionette

PEUGEOT

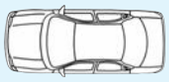	1 2	Spare Parts	F/R	L/R	FRITECH ref.		DIMENSIONS mm.	NOTE
2.7 Coupe Eng.140(ZMJ) (106kW)	4/73-		R	R	**CF013**	Luc	Ø 22,22	
	10/76-		R	R	**CF392**		Ø 22,00	Export
	10/81-		R		**CF089**	Luc	Ø 22,20	Camionette
	4/73-77				**PF292**		Ø 19,05	
					PF022		Ø 20,64	Ch 3597843-
	7/77-				**PF084**		Ø 20,64	Coupè, Cabrio, Camionette, -Servo
	7/81-				**PF115**		Ø 20,64	Camionette, +Servo
	77-84				**PZ024**		Ø 19,05	
504 Break 4/71-7/86								
1.8 Eng.XM7 (54kW)	71-86		R	L	**CF391**	Bdx	Ø 22,00	Export
	71-86		R	R	**CF392**	Bdx	Ø 22,00	Export
	68-71				**PF292**		Ø 19,05	
	7/79-				**PF022**		Ø 20,64	Ch -3624586
					PF115		Ø 20,64	Ch 3624587-, +Servo
	71-7/79				**PF084**		Ø 20,64	Exc. Sweden, -Servo
2.0 Eng.XN1/ P/ T/ XNA (68kW)	71-86		R	L	**CF391**	Bdx	Ø 22,00	Export
	71-86		R	R	**CF392**	Bdx	Ø 22,00	Export
	7/79-				**PF022**		Ø 20,64	Ch -3624586
					PF115		Ø 20,64	Ch 3624587-, +Servo
	71-7/79				**PF084**		Ø 20,64	Exc. Sweden, -Servo
2.1 D Eng.XD4x90 (48kW)	71-86		R	L	**CF391**	Bdx	Ø 22,00	Export
	71-86		R	R	**CF392**	Bdx	Ø 22,00	Export
	7/79-				**PF022**		Ø 20,64	Ch -3624586
					PF115		Ø 20,64	Ch 3624587-, +Servo
	71-7/79				**PF084**		Ø 20,64	Exc. Sweden, -Servo
2.3 D Eng.134(XD2/ XD2S) (47-51-54-59kW)	75-86		R	L	**CF391**	Bdx	Ø 22,00	Export
	75-86		R	R	**CF392**	Bdx	Ø 22,00	Export
	7/79-				**PF022**		Ø 20,64	Ch -3624586
					PF115		Ø 20,64	Ch 3624587-, +Servo
	10/75-7/79				**PF084**		Ø 20,64	Exc. Sweden, -Servo
505 (551A) 8/79-12/93								
1.6 Eng.XC7/ P (44kW)	-86		R		**CF530**	Bdx	Ø 20,64	Ch 1214235-
	82-86				**PF022**		Ø 20,64	
	82-86				**PZ024**		Ø 19,05	
1.8 Eng.105(XM7/ A) (60-62kW)	-1/86		R		**CF530**	Bdx	Ø 20,64	Ch 1214235-
	-1/86		R		**CF104**	Luc	Ø 20,64	Ch 1214235-
	82-86				**PF022**		Ø 20,64	
	82-86				**PZ024**		Ø 19,05	
1.8 Eng.105(XM7/ P) (55kW)	-1/86		R		**CF530**	Bdx	Ø 20,64	Ch 1214235-
	-1/86		R		**CF104**	Luc	Ø 20,64	Ch 1214235-
	81-1/86				**PF022**		Ø 20,64	
	81-85				**PZ024**		Ø 19,05	
2.0 Eng.106(XN1/ A/ P/ T) (71-72kW)	80-		R	L	**CF389**	Bdx	Ø 22,00	Ch -1214234, Export
	80-		R	L	**CF012**	Luc	Ø 22,22	Ch -1214234
	80-		R	R	**CF390**	Bdx	Ø 22,00	Ch -1214234, Export
	80-		R	R	**CF013**	Luc	Ø 22,22	Ch -1214234
	-91		R		**CF530**	Bdx	Ø 20,64	Ch 1214235-
	-91		R		**CF104**	Luc	Ø 20,64	Ch 1214235-
	80-91				**PF022**		Ø 20,64	
	80-91				**PZ024**		Ø 19,05	
2.2 Eng.851X(ZDJL) (84-85kW)	81-93				**PF022**		Ø 20,64	
	81-93				**PZ024**		Ø 19,05	
2.2i T. Eng.176B(N9TE) (114kW)	84-88				**PF022**		Ø 20,64	
	84-88				**PZ024**		Ø 19,05	
2.2i T. Eng.176W(N9TEA) (128kW)	87-88				**PF022**		Ø 20,64	
	87-88				**PZ024**		Ø 19,05	
2.2i T. Eng.176X(N9TE) (110kW)	86-87				**PF022**		Ø 20,64	
	86-87				**PZ024**		Ø 19,05	
2.3 D Eng.147(XD2) (47-51-59kW)	82-		R	L	**CF389**	Bdx	Ø 22,00	Ch -1214234, Export
	82-		R	L	**CF012**	Luc	Ø 22,22	Ch -1214234
	82-		R	R	**CF390**	Bdx	Ø 22,00	Ch -1214234, Export
	82-		R	R	**CF013**	Luc	Ø 22,22	Ch -1214234
	-86		R		**CF530**	Bdx	Ø 20,64	Ch 1214235-
	-86		R		**CF104**	Luc	Ø 20,64	Ch 1214235-

		Spare Parts	F/R	L/R	FRITECH ref.		DIMENSIONS mm.	NOTE
2.3 D Eng.147(XD2) (47-51-59kW)	82-86				**PZ024**		Ø 19,05	
2.3 TD Eng.147(XD2S) (54-59kW)	-86		R		**CF530**	Bdx	Ø 20,64	Ch 1214235-
	-86		R		**CF104**	Luc	Ø 20,64	Ch 1214235-
	80-86				**PF022**		Ø 20,64	
	80-86				**PZ024**		Ø 19,05	
2.5 D Eng.155(XD3) (51-55kW)	-83		R		**CF530**	Bdx	Ø 20,64	Ch 1214235-
	-83		R		**CF104**	Luc	Ø 20,64	Ch 1214235-
	81-93				**PF022**		Ø 20,64	
	81-93				**PZ024**		Ø 19,05	
2.5 TD Eng.152A(XD3T) (66kW)	-83		R		**CF530**	Bdx	Ø 20,64	Ch 1214235-
	-83		R		**CF104**	Luc	Ø 20,64	Ch 1214235-
	83-93				**PF022**		Ø 20,64	
	83-93				**PZ024**		Ø 19,05	
2.5 TD Eng.152B(XD3TE) (77kW)	-83		R		**CF530**	Bdx	Ø 20,64	Ch 1214235-
	-83		R		**CF104**	Luc	Ø 20,64	Ch 1214235-
	86-93				**PF022**		Ø 20,64	
	86-93				**PZ024**		Ø 19,05	
2.8 GTI V6 Eng.154X(ZN3J) (105-125kW)	86-93				**PZ024**		Ø 19,05	
505 Break (551D) 6/81-12/93								
1.8 Eng.105(XM7/ A) (60-62kW)	82-86		R		**CF089**	Luc	Ø 22,20	
	82-86				**PF115**		Ø 20,64	
1.8 Eng.105(XM7/ P) (55kW)	81-85		R		**CF089**	Luc	Ø 22,20	
	81-85				**PF115**		Ø 20,64	
2.0 Eng.106(XN1) (69kW)	83-85		R		**CF089**	Luc	Ø 22,20	
	83-85				**PF115**		Ø 20,64	
2.0 Eng.106E(XN1A) (72kW)	85-87		R		**CF089**	Luc	Ø 22,20	
	85-87				**PF115**		Ø 20,64	
2.2 Eng.851X(ZDJL) (84-85kW)	86-93		R		**CF089**	Luc	Ø 22,20	
	86-93				**PF115**		Ø 20,64	
2.2 GTI Eng.851B(ZDJL) (85-96kW)	85-86		R		**CF089**	Luc	Ø 22,20	
	85-86				**PF115**		Ø 20,64	
2.3 D Eng.147(XD2) (59kW)	82-86		R		**CF089**	Luc	Ø 22,20	
	82-86				**PF115**		Ø 20,64	
2.5 D Eng.155(XD3) (51-55-66kW)	86-93		R		**CF089**	Luc	Ø 22,20	
	86-93				**PF115**		Ø 20,64	
2.5 D Eng.155(XD3) (55kW)	83-93		R		**CF089**	Luc	Ø 22,20	
	83-93				**PF115**		Ø 20,64	
2.5 TD Eng.152A(XD3T) (66kW)	85-87		R		**CF089**	Luc	Ø 22,20	
	85-87				**PF115**		Ø 20,64	
2.5 TD Eng.152B(XD3TE) (77kW)	86-93		R		**CF089**	Luc	Ø 22,20	
	86-93				**PF115**		Ø 20,64	
604 (561A) 8/77-7/87								
2.3 TD Eng.147(XD2S) (54-59kW)	79-83				**PZ024**		Ø 19,05	
2.7 Eng.112(ZM) (100kW)	77-83				**PZ024**		Ø 19,05	
2.7 TI, STI Eng.140(ZMJ) (106kW)	77-83				**PZ024**		Ø 19,05	
605 (6B) 6/89-9/99								
2.0 Eng.R5A(XU10M) (79kW)	90-99				**PF196**	Bdx	Ø 22,20	ABS:Bosch, +ABS
	90-99				**PF197**	Bdx	Ø 22,20	-ABS
2.0 Eng.RFZ(XU10J2Z) (89kW)	89-99				**PF196**	Bdx	Ø 22,20	ABS:Bosch, +ABS
	89-99				**PF197**	Bdx	Ø 22,20	-ABS
2.0 16v Eng.RFV(XU10J4R) (97kW)	94-99				**PF196**	Bdx	Ø 22,20	ABS:Bosch, +ABS
	94-99				**PF197**	Bdx	Ø 22,20	-ABS
2.1 D Eng.P9A(XUD11A) (60kW)	89-95				**PF196**	Bdx	Ø 22,20	ABS:Bosch, +ABS
	89-95				**PF197**	Bdx	Ø 22,20	-ABS
2.1 TD 12v Eng.P8C(XUD11BTE) (80kW)	94-99				**PF196**	Bdx	Ø 22,20	ABS:Bosch, +ABS
	94-99				**PF197**	Bdx	Ø 22,20	-ABS
2.1 TD 12v Eng.PHZ(XUD11ATE) (80kW)	89-99				**PF196**	Bdx	Ø 22,20	ABS:Bosch, +ABS
	89-99				**PF197**	Bdx	Ø 22,20	-ABS
3.0 V6 12v Eng.UFZ(ZPJ) (123kW)	89-99				**PF196**	Bdx	Ø 22,20	ABS:Bosch, +ABS
	89-99				**PF197**	Bdx	Ø 22,20	-ABS
607 (9D) 2/00-12/10								
2.0 16v Eng.RFN(EW10J4) (100kW)	00-				**CZ103**	Fte	Ø 19,05	Pla, G.Box ML5C
2.0 HDi Eng.RHZ(DW10ATED) (80kW)	00-04				**CZ103**	Fte	Ø 19,05	Pla, G.Box ML6C

PEUGEOT

		Spare Parts	F/R	L/R	FRITECH ref.		DIMENSIONS mm.	NOTE
2.0 HDi 16v Eng.RHR(DW10BTED4) (100kW)	05-				**CZ103**	Fte	Ø 19,05	Pla
2.2 16v Eng.3FY(EW12J4) (120kW)	05-				**CZ103**	Fte	Ø 19,05	Pla
2.2 16v Eng.3FZ(EW12J4) (116kW)	00-				**CZ103**	Fte	Ø 19,05	Pla, G.Box ML5C
2.2 HDi Eng.4HX(DW12TED4-FAP) (98kW)	00-05				**CZ103**	Fte	Ø 19,05	Pla, G.Box ML6C
806 (221) 6/94-8/02								
1.8 Eng.LFW(XU7JP) (73kW)	6/95-		R		**CF094**		Ø 19,05	
					PF385	Bch	Ø 22,20	Ch 08207-, +ABS
					PF462	Bch	Ø 22,20	Ch 08207-, -ABS
	6/95-				**PF196**	Bdx	Ø 22,20	Ch -08206, +ABS
	6/95-				**PF197**	Bdx	Ø 22,20	Ch -08206, -ABS
1.9 TD Eng.DHX(XUD9TE) (66-68kW)	95-8/02		R		**CF094**		Ø 19,05	
	-02				**PF464**	Bch	Ø 23,81	Ch 08207-, +ABS
	-02				**PF429**	Bch	Ø 23,81	Ch 08207-, -ABS
	95-				**PF217**		Ø 23,81	Ch -08206, +ABS
	95-				**PF218**		Ø 23,81	Ch -08206, -ABS
1.9 TD Eng.DHY(XUD9TE) (66-68kW)	97-02		R		**CF094**		Ø 19,05	
	-02				**PF464**	Bch	Ø 23,81	Ch 08207-, +ABS
	-02				**PF429**	Bch	Ø 23,81	Ch 08207-, -ABS
	97-				**PF217**		Ø 23,81	Ch -08206, +ABS
	97-				**PF218**		Ø 23,81	Ch -08206, -ABS
2.0 Eng.RFU(XU10J2) (89kW)	6/94-5/99		R		**CF094**		Ø 19,05	
	-02				**PF464**	Bch	Ø 23,81	Ch 08207-, +ABS
	-02				**PF429**	Bch	Ø 23,81	Ch 08207-, -ABS
	94-				**PF217**		Ø 23,81	Ch -08206, +ABS
	94-				**PF218**		Ø 23,81	Ch -08206, -ABS
2.0 16v Eng.RFN(EW10J4) (100kW)	-02				**PF464**	Bch	Ø 23,81	Ch 08207-, +ABS
	-02				**PF429**	Bch	Ø 23,81	Ch 08207-, -ABS
	00-				**PF217**		Ø 23,81	Ch -08206, +ABS
	00-				**PF218**		Ø 23,81	Ch -08206, -ABS
2.0 16v Eng.RFV(XU10J4R) (97kW)	-00				**PF464**	Bch	Ø 23,81	Ch 08207-, +ABS
	-00				**PF429**	Bch	Ø 23,81	Ch 08207-, -ABS
	98-				**PF217**		Ø 23,81	Ch -08206, +ABS
	98-				**PF218**		Ø 23,81	Ch -08206, -ABS
2.0 HDi, 16v Eng.RHW/ RHZ(DW10ATED4) (80kW)	99-02		R		**CF094**		Ø 19,05	-ABS
	10/99-02				**PF464**	Bch	Ø 23,81	+ABS
	10/99-02				**PF429**	Bch	Ø 23,81	-ABS
	8/99-8/02				**PZ130**	Fte	Ø 19,05	Alu
2.0 T. Eng.RGX(XU10J2TE) (108kW)	-02				**PF464**	Bch	Ø 23,81	Ch 08207-, +ABS
	-02				**PF429**	Bch	Ø 23,81	Ch 08207-, -ABS
	94-				**PF217**		Ø 23,81	Ch -08206, +ABS
	94-				**PF218**		Ø 23,81	Ch -08206, -ABS
2.1 TD 12v Eng.PHZ/ P8C(XUD11ATE/ BTE)	3/96-5/99		R		**CF094**		Ø 19,05	
(80kW)	-99				**PF464**	Bch	Ø 23,81	Ch 08207-, +ABS
	-99				**PF429**	Bch	Ø 23,81	Ch 08207-, -ABS
	96-				**PF217**		Ø 23,81	Ch -08206, +ABS
	96-				**PF218**		Ø 23,81	Ch -08206, -ABS
807 (E) 6/02-12/14								
2.0 16v Eng.RFJ(EW10A) (103kW)	05-				**CZ103**	Fte	Ø 19,05	Pla
	05-				**PZ130**	Fte	Ø 19,05	Alu
2.0 16v Eng.RFN(EW10J4) (100kW)	02-				**CZ103**	Fte	Ø 19,05	Pla
	6/02-				**PZ130**	Fte	Ø 19,05	Alu
2.0 HDi FAP Eng.RHW/ RHT/ RHM(DW10ATED4) (79-80kW)	6/02-				**PZ130**	Fte	Ø 19,05	Alu
2.2 16v Eng.3FZ(EW12J4) (116kW)	02-				**CZ103**	Fte	Ø 19,05	Pla
	02-				**PZ130**	Fte	Ø 19,05	Alu
2.2 HDi Eng.4HX(DW12TED4-FAP) (94-98kW)	6/02-				**PZ130**	Fte	Ø 19,05	Alu
Ion 11/10-								
Electric Eng.Y4F1 (35-47kW)	10-		R		**CF826**		Ø 19,05	
Rcz 3/10-12/15								
1.6 16v THP Eng.5FV(EP6CDT) (115kW)	10-				**PF798**	Bch	Ø 23,81	Alu, +ABS, +ESP
2.0 HDi Eng.5HH(DW10CTED4) (120kW)	10-				**PF798**	Bch	Ø 23,81	Alu, +ABS, +ESP

		Spare Parts	F/R	L/R	FRITECH ref.		DIMENSIONS mm.	NOTE
205 Van 10/87-9/98								
1.1 Eng.109N(XW7) (36kW)	87-98		R	L	**CF052**	Bdx	Ø 19,05	CRCI
	87-98		R	L	**CF050**	Luc	Ø 19,05	CRCI
	87-98		R	R	**CF053**	Bdx	Ø 19,05	CRCI
	87-98		R	R	**CF051**	Luc	Ø 19,05	CRCI
	87-98				**PF008**	Ate	Ø 19,00	-ABS, +Servo, 3 Connections
	87-98				**PF169**	Ate	Ø 19,05	+Servo, 4 Connections
	87-98				**PF007**	Ate	Ø 20,64	+Servo, 4 Connections
	87-98				**PF194**	Ate	Ø 20,64	+Servo
	90-98				**PF131**	Bdx	Ø 20,64	+ABS, +Servo
1.1 Eng.H1B(TU1) (40kW)	87-90		R		**CF104**	Luc	Ø 20,64	
1.8 D Eng.161A(XUD7) (44kW)	94-		R		**CF104**	Luc	Ø 20,64	
	94-				**PF007**	Ate	Ø 20,64	
206 Van 1/01-3/09								
1.4 HDi Eng.8HX/8HV(DV4TD) (50kW)	01-		R		**CF162**	Luc	Ø 20,64	Alu, +ABS
	01-				**PF590**	Ate	Ø 22,20	Alu, +ABS, +ESP
	01-				**PF243**	Ate	Ø 22,20	Alu, +ABS, -ESP
	01-				**PF242**	Ate	Ø 20,64	Alu, -ABS
1.9 D Eng.WJZ(DW8) (51kW)	99-01		R	L	**CF142**	Bch	Ø 19,05	CRCI, -ABS
	99-01		R	R	**CF143**	Bch	Ø 19,05	CRCI, -ABS
	99-		R		**CF102**	Bdx	Ø 19,05	-ABS, +PS
	99-		R		**CF162**	Luc	Ø 20,64	Alu, Exc. Scandinavia, +ABS
	99-				**PF243**	Ate	Ø 22,20	Alu, Exc. Scandinavia, +ABS, -ESP
	99-				**PF242**	Ate	Ø 20,64	Alu, -ABS
	99-				**PF273**	Bch	Ø 20,64	Alu, -ABS
207 Van 4/07-12/15								
1.4 HDi Eng.8HZ(DV4TD) (50kW)	09-		R	L	**CF046**	Bdx	Ø 20,64	CRCI, -ABS
	09-		R	R	**CF047**	Bdx	Ø 20,64	CRCI, -ABS
	09-		R		**CF850**	Bch	Ø 20,64	Alu, Brake drum 9Inch, +ABS
	09-				**PF792**	Trw	Ø 22,20	Alu, +ABS, +ESP
	09-				**PF791**	Trw	Ø 22,20	Alu, +ABS, -ESP
306 Van 5/93-12/02								
1.4 SL Eng.KFW/ KFX(TU3JP)/ KDX(TU3MC)	93-		R		**CF133**	Bdx	Ø 20,64	
(55kW)	93-				**PF269**	Ate	Ø 22,20	Alu, -ABS
1.6 SR, Cabrio Eng.NFZ(TU5JP) (65kW)	93-00		R		**CF133**	Bdx	Ø 20,64	
	93-00				**PF269**	Ate	Ø 22,20	Alu, -ABS
	97-8/00				**PF274**	Bch	Ø 22,20	Alu, +ABS
1.8 D Eng.A9A(XUD7) (43kW)	93-		R		**CF133**	Bdx	Ø 20,64	
	93-				**PF269**	Ate	Ø 22,20	Alu, -ABS
1.9 D Eng.DHV(XUD9BSD) (55kW)	98-		R		**CF133**	Bdx	Ø 20,64	
	98-				**PF269**	Ate	Ø 22,20	Alu, -ABS
1.9 STD Eng.DJY(XUD9A) (50kW)	94-		R		**CF133**	Bdx	Ø 20,64	
	94-				**PF269**	Ate	Ø 22,20	Alu, -ABS
308 Van 10/09-12/13								
1.6 HDi Eng.DV6ATED4 (66kW)	09-				**PF798**	Bch	Ø 23,81	Alu, +ABS, +ESP
	09-				**PF873**	Bch	Ø 23,81	Alu, +ABS, -ESP
1.6 HDi Eng.DV6TED4 (80kW)	09-				**PF798**	Bch	Ø 23,81	Alu, +ABS, +ESP
	09-				**PF873**	Bch	Ø 23,81	Alu, +ABS, -ESP
Bipper (AA) 2/08-								
1.3 HDi Eng.FHZ(F13DTE5) (55kW)	10-		R		**CF827**	Loc	Ø 20,64	Alu
	10-				**PF793**	Bch	Ø 22,20	Alu
	10-				**CZ104**	Fte	Ø 19,05	Pla
	10-				**PZ146**	Fte	Ø 15,87	Alu
1.4 Eng.KFV(TU3A) (54kW)	08-		R		**CF827**	Loc	Ø 20,64	Alu
	08-				**PF793**	Bch	Ø 22,20	Alu
	08-				**CZ104**	Fte	Ø 19,05	Pla
	08-				**PZ146**	Fte	Ø 15,87	Alu
1.4 HDi Eng.8HS(DV4TED) (50kW)	08-		R		**CF827**	Loc	Ø 20,64	Alu
	08-				**PF793**	Bch	Ø 22,20	Alu
	08-				**CZ104**	Fte	Ø 19,05	Pla
	08-				**PZ146**	Fte	Ø 15,87	Alu

		Spare Parts	F/R	L/R	FRITECH ref.		DIMENSIONS mm.	NOTE
Boxer I (230) 3/94-4/02								
1.9 D Eng.D8C(XUD9AU) (51kW)	94-02		R		**CF182**	Loc	Ø 27,00	
	94-02		R		**CF181**		Ø 25,40	10-14Q
	2/94-12/94				**PF207**		Ø 22,20	10-14Q, +ABS
	1/95-02				**PF206**		Ø 23,81	10-14Q, +ABS
	2/94-12/94				**PF210**		Ø 22,20	10-14Q, -ABS
	1/95-02				**PF209**		Ø 23,81	10-14Q, -ABS
	94-				**CT016**		Ø 25,40	Ch -S16206244, Alu, Rear Disc Brake, 10Q, -ABS
1.9 D Eng.DJY(XUD9A) (50kW)	99-02		R		**CF181**		Ø 25,40	10-14Q
	99-02				**PF206**		Ø 23,81	10-14Q, +ABS
	99-02				**PF209**		Ø 23,81	10-14Q, -ABS
	99-				**CT016**		Ø 25,40	Ch -S16206244, Alu, Rear Disc Brake, 10Q, -ABS
1.9 TD, 4WD Eng.D8C(XUD9UTF) (68kW)	94-02		R		**CF182**	Loc	Ø 27,00	
	2/94-		R		**CF181**		Ø 25,40	10-14Q
	2/94-12/94				**PF207**		Ø 22,20	10-14Q, +ABS
	1/95-				**PF206**		Ø 23,81	10-14Q, +ABS
	2/94-12/94				**PF210**		Ø 22,20	10-14Q, -ABS
	1/95-				**PF209**		Ø 23,81	10-14Q, -ABS
	94-				**CT016**		Ø 25,40	Ch -S16206244, Alu, Rear Disc Brake, 10-14Q, -ABS
1.9 TD, 4WD Eng.DHY(XUD9TE) (66-68kW)	94-02		R		**CF182**	Loc	Ø 27,00	
	2/94-		R		**CF181**		Ø 25,40	10-14Q
	2/94-12/94				**PF207**		Ø 22,20	10-14Q, +ABS
	1/95-				**PF206**		Ø 23,81	10-14Q, +ABS
	2/94-12/94				**PF210**		Ø 22,20	10-14Q, -ABS
	1/95-				**PF209**		Ø 23,81	10-14Q, -ABS
	94-				**CT016**		Ø 25,40	Ch -S16206244, Alu, Rear Disc Brake, 10-14Q, -ABS
2.0 HDi Eng.RHV(DW10UTD) (62kW)	01-02		R		**CF182**	Loc	Ø 27,00	10-14Q
	01-02		R		**CF183**		Ø 28,60	18Q
	01-02				**PF205**		Ø 25,40	+ABS
	01-02				**PF208**		Ø 25,40	-ABS
	01-				**CT016**		Ø 25,40	Ch -S16206244, Alu, Rear Disc Brake, 10-14-18Q, -ABS
2.0, 4WD Eng.RFW(XU10J2/ C) (80kW)	94-02		R		**CF182**	Loc	Ø 27,00	
	94-02		R		**CF181**		Ø 25,40	10-14Q
	94-02		R		**CF183**		Ø 28,60	18Q
	2/94-12/94				**PF207**		Ø 22,20	10-14Q, +ABS
	1/95-02				**PF206**		Ø 23,81	10-14Q, +ABS
	94-02				**PF205**		Ø 25,40	18Q, +ABS
	2/94-12/94				**PF210**		Ø 22,20	10-14Q, -ABS
	1/95-02				**PF209**		Ø 23,81	10-14Q, -ABS
	94-02				**PF208**		Ø 25,40	18Q, -ABS
	94-				**CT016**		Ø 25,40	Ch -S16206244, Alu, Rear Disc Brake, 10-14-18Q, -ABS
	94-				**PZ155**	Valeo	Ø 15,87	
2.5 D, 4WD Eng.T9A(DJ5) (63kW)	2/94-		R		**CF181**		Ø 25,40	10-14Q
	2/94-		R		**CF183**		Ø 28,60	18Q
	2/94-12/94				**PF207**		Ø 22,20	10-14Q, +ABS
	1/95-				**PF206**		Ø 23,81	10-14Q, +ABS
	2/94-				**PF205**		Ø 25,40	18Q, +ABS
	2/94-12/94				**PF210**		Ø 22,20	10-14Q, -ABS
	1/95-				**PF209**		Ø 23,81	10-14Q, -ABS
	2/94-				**PF208**		Ø 25,40	18Q, -ABS
	94-				**CT016**		Ø 25,40	Ch -S16206244, Alu, Rear Disc Brake, 14-18Q, -ABS
2.5 TD, 4WD Eng.T8A(DJ5T) (76-95kW)	2/94-		R		**CF182**	Loc	Ø 27,00	10-14Q
	2/94-		R		**CF183**		Ø 28,60	18Q
	2/94-12/94				**PF207**		Ø 22,20	10-14Q, +ABS
	1/95-				**PF206**		Ø 23,81	10-14Q, +ABS
	2/94-				**PF205**		Ø 25,40	18Q, +ABS
	2/94-12/94				**PF210**		Ø 22,20	10-14Q, -ABS
	1/95-				**PF209**		Ø 23,81	10-14Q, -ABS
	2/94-				**PF208**		Ø 25,40	18Q, -ABS

		Spare Parts	F/R	L/R	FRITECH ref.		DIMENSIONS mm.	NOTE
2.5 TD, 4WD Eng.T8A(DJ5T) (76-95kW)	94-				**CT016**		Ø 25,40	Ch -S16206244, Alu, Rear Disc Brake, 14-18Q, -ABS
2.5 TDi, 4WD Eng.THX(DJ5TED) (79kW)	97-02		R		**CF182**	Loc	Ø 27,00	10-14Q
	97-02		R		**CF183**		Ø 28,60	18Q
	97-02				**PF206**		Ø 23,81	10-14Q, +ABS
	97-02				**PF205**		Ø 25,40	18Q, +ABS
	97-02				**PF209**		Ø 23,81	10-14Q, -ABS
	97-02				**PF208**		Ø 25,40	18Q, -ABS
	97-				**CT016**		Ø 25,40	Ch -S16206244, Alu, Rear Disc Brake, 14-18Q, -ABS
2.8 DTiC Eng.8140.43 (90kW)	97-				**PZ155**	Valeo	Ø 15,87	
2.8 HDi, 4WD Eng.8140.43S (93-94kW)	00-02		R		**CF182**	Loc	Ø 27,00	
	00-02		R		**CF183**		Ø 28,60	18Q
	00-02				**PF205**		Ø 25,40	18Q, +ABS
	00-02				**PF208**		Ø 25,40	18Q, -ABS
	00-				**CT016**		Ø 25,40	Ch -S16206244, Alu, Rear Disc Brake, 14-18Q, -ABS
	00-				**PZ155**	Valeo	Ø 15,87	
Boxer II (244) 4/02-3/06								
2.0 Eng.RFL(XU10J2U) (81kW)	02-06		R		**CF182**	Loc	Ø 27,00	Rear Drum Brake
	4/02-				**PF526**	Bch	Ø 25,40	-ABS, M/T
	4/02-				**PF547**		Ø 25,40	+ABS
2.0 HDi Eng.RHV(DW10UTD) (62kW)	02-06		R		**CF182**	Loc	Ø 27,00	Rear Drum Brake
	4/02-				**PF526**	Bch	Ø 25,40	-ABS, M/T
	4/02-				**PF547**		Ø 25,40	+ABS
	02-				**PZ155**	Valeo	Ø 15,87	
2.2 HDi Eng.4HY(DW12UTED) (74kW)	02-06		R		**CF182**	Loc	Ø 27,00	Rear Drum Brake
	4/02-				**PF526**	Bch	Ø 25,40	-ABS, M/T
	4/02-				**PF547**		Ø 25,40	+ABS
	02-				**PZ155**	Valeo	Ø 15,87	
2.8 HDi Eng.8140.43N (107kW)	04-06		R		**CF182**	Loc	Ø 27,00	Rear Drum Brake
	4/04-3/06				**PF526**	Bch	Ø 25,40	-ABS, M/T
	04-				**PZ155**	Valeo	Ø 15,87	
2.8 HDi, 4WD Eng.8140.43S (94kW)	02-06		R		**CF182**	Loc	Ø 27,00	Rear Drum Brake
	4/02-				**PF526**	Bch	Ø 25,40	-ABS, M/T
	4/02-				**PF547**		Ø 25,40	+ABS
	02-				**PZ155**	Valeo	Ø 15,87	
2.8 TD Eng.8140.43 (90kW)	02-				**PZ155**	Valeo	Ø 15,87	
Boxer III 4/06-11/14								
2.2 HDi Eng.4H03 (110kW)	11-				**PF875**	Bch	Ø 25,40	Alu, 12-14Q, +ESP
	11-				**PF874**	Bch	Ø 25,40	Alu, 12-14Q, -ESP
	11-				**PF876**	Bch	Ø 26,99	Alu, 16-20Q, -ESP, -VDC, M/T+A/T
2.2 HDi Eng.4H03 (81kW)	11-				**PF875**	Bch	Ø 25,40	Alu, 12-14Q, +ESP
	11-				**PF874**	Bch	Ø 25,40	Alu, 12-14Q, -ESP
	11-				**PF876**	Bch	Ø 26,99	Alu, 16-20Q, -ESP, -VDC, M/T+A/T
2.2 HDi Eng.4H03 (96kW)	11-				**PF875**	Bch	Ø 25,40	Alu, 12-14Q, +ESP
	11-				**PF874**	Bch	Ø 25,40	Alu, 12-14Q, -ESP
	11-				**PF876**	Bch	Ø 26,99	Alu, 16-20Q, -ESP, -VDC, M/T+A/T
2.2 HDi Eng.4HU (88kW)	06-				**PF724**	Bch	Ø 26,99	Alu, 17-20Q, +ESP, +VDC
	06-				**PF876**	Bch	Ø 26,99	Alu, 17-20Q, -ESP, -VDC
	06-				**PF874**	Bch	Ø 25,40	Alu, 11-15Q, -VDC
	06-				**PF875**	Bch	Ø 25,40	Alu, 11-15Q, +VDC
2.2 HDi Eng.4HV(DW12TED) (74kW)	06-				**PF724**	Bch	Ø 26,99	Alu, 17-20Q, +ESP, +VDC
	06-				**PF876**	Bch	Ø 26,99	Alu, 17-20Q, -ESP, -VDC
	06-				**PF874**	Bch	Ø 25,40	Alu, 11-15Q, -VDC
	06-				**PF875**	Bch	Ø 25,40	Alu, 11-15Q, +VDC
3.0 HDi Eng.F1AE0481D (115kW)	06-				**PF724**	Bch	Ø 26,99	Alu, 17-20Q, +ESP, +VDC
	06-				**PF876**	Bch	Ø 26,99	Alu, 17-20Q, -ESP, -VDC
	06-				**PF874**	Bch	Ø 25,40	Alu, 11-15Q, -VDC
	06-				**PF875**	Bch	Ø 25,40	Alu, 11-15Q, +VDC
3.0 HDi Eng.F1CE3481E (130kW)	11-				**PF875**	Bch	Ø 25,40	Alu, 12-14Q, +ESP
	11-				**PF874**	Bch	Ø 25,40	Alu, 12-14Q, -ESP
	11-				**PF876**	Bch	Ø 26,99	Alu, 16-20Q, -ESP, -VDC, M/T+A/T

PEUGEOT LCV

		Spare Parts	F/R	L/R	FRITECH ref.		DIMENSIONS mm.	NOTE
3.0 HDi Eng.F30DT (107kW)	10-				**PF875**	Bch	Ø 25,40	Alu, 12-14Q, +ESP
	10-				**PF874**	Bch	Ø 25,40	Alu, 12-14Q, -ESP
	10-				**PF876**	Bch	Ø 26,99	Alu, 16-20Q, -ESP, -VDC, M/T+A/T
Expert I (222,223,224) 2/96-12/06								
1.6 Eng.220A2.000 (58kW)	96-		R		**CF094**		Ø 19,05	Ch -8206
					PF462	Bch	Ø 22,20	Ch 8207-, -ABS
	96-				**PF196**	Bdx	Ø 22,20	Ch -8206, +ABS
	96-				**PF197**	Bdx	Ø 22,20	-ABS
	96-				**PF217**		Ø 23,81	Ch -8206, +ABS
	96-				**PF218**		Ø 23,81	-ABS
1.9 D Eng.D9B/ C(XUD9/ AU/ Y) (48-51kW)	96-		R		**CF094**		Ø 19,05	Ch -8206
					PF462	Bch	Ø 22,20	Ch 8207-, -ABS
	96-				**PF196**	Bdx	Ø 22,20	Ch -8206, +ABS
	96-				**PF197**	Bdx	Ø 22,20	-ABS
	96-				**PF217**		Ø 23,81	Ch -8206, +ABS
	96-				**PF218**		Ø 23,81	-ABS
1.9 D Eng.WJZ(DW8) (51kW)	98-		R		**CF094**		Ø 19,05	Ch -8206
					PF462	Bch	Ø 22,20	Ch 8207-, -ABS
	98-				**PF196**	Bdx	Ø 22,20	Ch -8206, +ABS
	98-				**PF197**	Bdx	Ø 22,20	-ABS
	98-				**PF217**		Ø 23,81	Ch -8206, +ABS
	98-				**PF218**		Ø 23,81	-ABS
1.9 TD Eng.DHX(XUD9TE) (66-68kW)	96-		R		**CF094**		Ø 19,05	Ch -8206
					PF462	Bch	Ø 22,20	Ch 8207-, -ABS
	96-				**PF196**	Bdx	Ø 22,20	Ch -8206, +ABS
	96-				**PF197**	Bdx	Ø 22,20	-ABS
	96-				**PF217**		Ø 23,81	Ch -8206, +ABS
	96-				**PF218**		Ø 23,81	-ABS
2.0 16v Eng.RFN(EW10J4) (100kW)	00-06				**PF385**	Bch	Ø 22,20	+ABS
	00-06				**PF464**	Bch	Ø 23,81	+ABS
	00-06				**PF429**	Bch	Ø 23,81	-ABS
2.0 HDi Eng.RHX(DW10BTED) (69kW)	00-		R		**CF094**		Ø 19,05	
	00-				**PF385**	Bch	Ø 22,20	+ABS
	7/00-				**PF464**	Bch	Ø 23,81	+ABS
	00-				**PF429**	Bch	Ø 23,81	-ABS
	7/00-				**PZ130**	Fte	Ø 19,05	Alu
2.0 HDi, 16v Eng.RHW/ RHZ(DW10ATED4) (80kW)	00-06		R		**CF094**		Ø 19,05	
	00-06				**PF385**	Bch	Ø 22,20	+ABS
	00-06				**PF464**	Bch	Ø 23,81	+ABS
	00-06				**PF429**	Bch	Ø 23,81	-ABS
	00-06				**PZ130**	Fte	Ø 19,05	Alu
Expert II Tepee (VF3V) 1/07-								
1.6 HDi 16v Eng.9HU(DV6UTED4)/9HH/9HM	07-		R		**CF830**	Trw	Ø 22,20	Alu
(66kW)	07-				**PF877**	Ate	Ø 25,40	Alu, +ABS, -ESP, LHD
	07-				**PF878**	Ate	Ø 25,40	Alu, +ESP
2.0 16v Eng.RFJ(EW10A) (103kW)	07-				**PF877**	Ate	Ø 25,40	Alu, +ABS, -ESP, LHD
	07-				**PF878**	Ate	Ø 25,40	Alu, +ESP
2.0 HDi Eng.AHZ(DW10CD) (94kW)	11-				**PF877**	Ate	Ø 25,40	Alu, +ABS, -ESP, LHD
2.0 HDi Eng.DW10CE (72kW)	11-				**PF877**	Ate	Ø 25,40	Alu, +ABS, -ESP, LHD
	07-				**PF878**	Ate	Ø 25,40	Alu, +ESP
2.0 HDi Eng.RHK(DW10UTED4) (88kW)	07-		R		**CF830**	Trw	Ø 22,20	Alu
	07-				**PF877**	Ate	Ø 25,40	Alu, +ABS, -ESP, LHD
	07-				**PF878**	Ate	Ø 25,40	Alu, +ESP
2.0 HDi 16v Eng.RHH(DW10CTED4) (120kW)	09-				**PF877**	Ate	Ø 25,40	Alu, +ABS, -ESP, LHD
2.0 HDi 16v Eng.RHR(DW10BTED4) (100kW)	07-		R		**CF830**	Trw	Ø 22,20	Alu
	07-				**PF877**	Ate	Ø 25,40	Alu, +ABS, -ESP, LHD
	07-				**PF878**	Ate	Ø 25,40	Alu, +ESP
J5 (280/290) 9/81-12/94								
1.8 Eng.169B(XM7T) (51kW)	83-		R		**CF270**	Luc	Ø 22,22	Ch -77159
			R		**CF306**	Luc	Ø 22,22	Ch 77160-, 8Q
			R		**CF157**	Luc	Ø 25,40	Ch 77160-, Exc. 8-18Q
			R		**CF210**		Ø 26,99	Ch 77160-, 18Q
	83-				**PF031**		Ø 22,20	
	83-				**CT012**		Ø 25,40	Ch -77159, Alu

		Spare Parts	F/R	L/R	FRITECH ref.		DIMENSIONS mm.	NOTE
1.8 Eng.169B(XM7T) (51kW)					**CT011**		Ø 25,40	Ch 77160-, Alu, Exc. 18Q
					CT012		Ø 25,40	Ch 77160-, Alu, 18Q
1.9 D Eng.D9B(XUD9/ A/ Y) (51kW)	90-		R		**CF270**	Luc	Ø 22,22	Ch -77159
			R		**CF306**	Luc	Ø 22,22	Ch 77160-, 8Q
			R		**CF157**	Luc	Ø 25,40	Ch 77160-, Exc. 8-18Q
			R		**CF210**		Ø 26,99	Ch 77160-, 18Q
	90-				**PF031**		Ø 22,20	
	90-				**CT012**		Ø 25,40	Ch -77159, Alu
					CT011		Ø 25,40	Ch 77160-, Alu, Exc. 18Q
					CT012		Ø 25,40	Ch 77160-, Alu, 18Q
2.0 Eng.170A/ B(XN1P/ T) (58kW)	83-		R		**CF270**	Luc	Ø 22,22	Ch -77159
			R		**CF306**	Luc	Ø 22,22	Ch 77160-, 8Q
			R		**CF157**	Luc	Ø 25,40	Ch 77160-, Exc. 8-18Q
			R		**CF210**		Ø 26,99	Ch 77160-, 18Q
	83-				**PF031**		Ø 22,20	
	83-				**CT012**		Ø 25,40	Ch -77159, Alu
					CT011		Ø 25,40	Ch 77160-, Alu, Exc. 18Q
					CT012		Ø 25,40	Ch 77160-, Alu, 18Q
2.0 Eng.170B/ XN1T (55kW)	10/81-		R		**CF270**	Luc	Ø 22,22	Ch -77159
			R		**CF306**	Luc	Ø 22,22	Ch 77160-, 8Q
			R		**CF157**	Luc	Ø 25,40	Ch 77160-, Exc. 8-18Q
			R		**CF210**		Ø 26,99	Ch 77160-, 18Q
	81-90				**PF031**		Ø 22,20	
	10/81-				**CT012**		Ø 25,40	Ch -77159, Alu
					CT011		Ø 25,40	Ch 77160-, Alu, Exc. 18Q
					CT012		Ø 25,40	Ch 77160-, Alu, 18Q
2.0 Eng.170D(XN1TACP) (62-69kW)	90-		R		**CF270**	Luc	Ø 22,22	Ch -77159
			R		**CF306**	Luc	Ø 22,22	Ch 77160-, 8Q
			R		**CF157**	Luc	Ø 25,40	Ch 77160-, Exc. 8-18Q
			R		**CF210**		Ø 26,99	Ch 77160-, 18Q
	90-				**PF031**		Ø 22,20	
	90-				**CT012**		Ø 25,40	Ch -77159, Alu
					CT011		Ø 25,40	Ch 77160-, Alu, Exc. 18Q
					CT012		Ø 25,40	Ch 77160-, Alu, 18Q
2.5 D, 4WD Eng.CRD93(U25-661/ 651/ 673) (54-55-70kW)	10/81-		R		**CF270**	Luc	Ø 22,22	Ch -77159
			R		**CF306**	Luc	Ø 22,22	Ch 77160-, 8Q
			R		**CF157**	Luc	Ø 25,40	Ch 77160-, Exc. 8-18Q
			R		**CF210**		Ø 26,99	Ch 77160-, 18Q
	10/81-				**PF031**		Ø 22,20	
	10/81-				**CT012**		Ø 25,40	Ch -77159, Alu
					CT011		Ø 25,40	Ch 77160-, Alu, Exc. 18Q
					CT012		Ø 25,40	Ch 77160-, Alu, 18Q
2.5 TD, 4WD Eng.CRD93LS(U25-673) (55-70kW)	90-		R		**CF270**	Luc	Ø 22,22	Ch -77159
			R		**CF306**	Luc	Ø 22,22	Ch 77160-, 8Q
			R		**CF157**	Luc	Ø 25,40	Ch 77160-, Exc. 8-18Q
			R		**CF210**		Ø 26,99	Ch 77160-, 18Q
	90-				**PF031**		Ø 22,20	
	90-				**CT012**		Ø 25,40	Ch -77159, Alu
					CT011		Ø 25,40	Ch 77160-, Alu, Exc. 18Q
					CT012		Ø 25,40	Ch 77160-, Alu, 18Q
J7 8/68-3/80								
1.5 Eng.XB5P (61kW)	68-70		R		**CF529**		Ø 25,40	
	68-70				**CZ019**		Ø 28,60	
1.6 Eng.XC5/ P (50kW)	73-80		R		**CF529**		Ø 25,40	
	68-80				**CZ019**		Ø 28,60	
1.6 Eng.XC7/ P (44kW)	73-80		R		**CF529**		Ø 25,40	
	68-80				**CZ019**		Ø 28,60	
1.8 Eng.105(XM7/ P) (48kW)	70-80		R		**CF529**		Ø 25,40	
	70-80				**CZ019**		Ø 28,60	
1.9 D Eng.XDP88 (37-40kW)	9/73-78		R		**CF529**		Ø 25,40	
	68-78				**CZ019**		Ø 28,60	
2.1 D Eng.XDPX90 (41-42kW)	9/73-77		R		**CF529**		Ø 25,40	
	68-77				**CZ019**		Ø 28,60	

PEUGEOT LCV

		Spare Parts	F/R	L/R	FRITECH ref.		DIMENSIONS mm.	NOTE
2.3 D Eng.XD2PX94 (49kW)	77-80		R		**CF529**		Ø 25,40	
	77-80				**CZ019**		Ø 28,60	
J9 3/80-6/87								
1.6 Eng.XC7/ P (44kW)	80-87		R		**CF529**		Ø 25,40	
	80-87				**CZ019**		Ø 28,60	
2.0 Eng.XN1/ P/ T/ XNA (57kW)	80-87		R		**CF529**		Ø 25,40	
	80-87				**CZ019**		Ø 28,60	
2.1 D Eng.XDPX90 (41-42kW)	80-87		R		**CF529**		Ø 25,40	
	80-87				**CZ019**		Ø 28,60	
2.3 D Eng.XD2PX94 (49kW)	80-82		R		**CF529**		Ø 25,40	
	80-82				**CZ019**		Ø 28,60	
2.5 D Eng.XD3P (53kW)	82-87		R		**CF529**		Ø 25,40	
	82-87				**CZ019**		Ø 28,60	
Partner/Ranch I (5F) 6/96-3/08								
1.1 Eng.HDZ(TU1M)/ HFX(TU1JP) (44kW)	7/96-		R		**CF158**	Luc	Ø 22,00	
	7/96-		R		**CF868**	Trw	Ø 22,00	Alu
	6/00-				**PF268**	Bdx	Ø 23,81	Ch -09001, Alu, +ABS
	7/96-6/00				**PF265**	Bdx	Ø 23,81	Alu, +ABS
	00-				**PF272**	Bdx	Ø 23,81	Ch -09001, Alu, -ABS
	7/96-6/00				**PF271**	Bdx	Ø 23,81	Alu, -ABS
1.4 Eng.TU3A (55kW)	06-08		R		**CF158**	Luc	Ø 22,00	
	06-08		R		**CF868**	Trw	Ø 22,00	Alu
	06-08				**PF268**	Bdx	Ø 23,81	Ch -09001, Alu, +ABS
	06-08				**PF272**	Bdx	Ø 23,81	Ch -09001, Alu, -ABS
1.4, Bifuel Eng.KFW/ KFX(TU3JP) (55kW)	7/96-		R		**CF158**	Luc	Ø 22,00	
	7/96-		R		**CF868**	Trw	Ø 22,00	Alu
	6/00-				**PF268**	Bdx	Ø 23,81	Ch -09001, Alu, +ABS
	7/96-6/00				**PF265**	Bdx	Ø 23,81	Alu, +ABS
	00-				**PF272**	Bdx	Ø 23,81	Ch -09001, Alu, -ABS
	7/96-6/00				**PF271**	Bdx	Ø 23,81	Alu, -ABS
1.6 16v Eng.NFU(TU5JP4) (80kW)	01-		R		**CF158**	Luc	Ø 22,00	
	01-		R		**CF868**	Trw	Ø 22,00	Alu
	02-				**PF884**	Bch	Ø 23,81	Alu, +ABS, +ESP
	7/01-				**PF268**	Bdx	Ø 23,81	Ch -09001, Alu, +ABS
	7/01-				**PF272**	Bdx	Ø 23,81	Ch -09001, Alu, -ABS
1.6 HDi 16v Eng.9HX(DV6ATED4) (66kW)	06-				**PF884**	Bch	Ø 23,81	Alu, +ABS, +ESP
1.8 Eng.LFX(XU7JB) (66kW)	5/97-9/98		R		**CF158**	Luc	Ø 22,00	
	5/97-9/98		R		**CF868**	Trw	Ø 22,00	Alu
	5/97-9/98				**PF265**	Bdx	Ø 23,81	Alu, +ABS
	00-				**PF272**	Bdx	Ø 23,81	Ch -09001, Alu, -ABS
	5/97-6/00				**PF271**	Bdx	Ø 23,81	Alu, -ABS
1.8 D Eng.A9A(XUD7) (43kW)	96-		R		**CF158**	Luc	Ø 22,00	
	96-		R		**CF868**	Trw	Ø 22,00	Alu
	6/00-				**PF268**	Bdx	Ø 23,81	Ch -09001, Alu, +ABS
	7/96-6/00				**PF265**	Bdx	Ø 23,81	Alu, +ABS
	00-				**PF272**	Bdx	Ø 23,81	Ch -09001, Alu, -ABS
	96-6/00				**PF271**	Bdx	Ø 23,81	Alu, -ABS
1.9 D Eng.DJY(XUD9A/ DW8/ B) (50kW)	96-		R		**CF158**	Luc	Ø 22,00	
	96-		R		**CF868**	Trw	Ø 22,00	Alu
	6/00-				**PF268**	Bdx	Ø 23,81	Ch -09001, Alu, +ABS
	96-6/00				**PF265**	Bdx	Ø 23,81	Alu, +ABS
	00-				**PF272**	Bdx	Ø 23,81	Ch -09001, Alu, -ABS
	96-6/00				**PF271**	Bdx	Ø 23,81	Alu, -ABS
1.9 D, 4WD Eng.WJZ/ WJY(DW8/ B) (51kW)	98-		R		**CF158**	Luc	Ø 22,00	
	98-		R		**CF868**	Trw	Ø 22,00	Alu
	98-02				**PF573**	Ate	Ø 23,81	Alu, -ABS
	02-				**PF268**	Bdx	Ø 23,81	Ch -09001, Alu, +ABS
	02-				**PF272**	Bdx	Ø 23,81	Ch -09001, Alu, -ABS
2.0 HDi, 4WD Eng.RHY(DW10TD) (66kW)	00-08		R		**CF158**	Luc	Ø 22,00	
	00-08		R		**CF868**	Trw	Ø 22,00	Alu
	02-				**PF884**	Bch	Ø 23,81	Alu, +ABS, +ESP
	6/00-				**PF268**	Bdx	Ø 23,81	Ch -09001, Alu, +ABS
	4/00-6/00				**PF265**	Bdx	Ø 23,81	Alu, +ABS
	00-				**PF272**	Bdx	Ø 23,81	Ch -09001, Alu, -ABS

PEUGEOT LCV

		Spare Parts	F/R	L/R	FRITECH ref.		DIMENSIONS mm.	NOTE
2.0 HDi, 4WD Eng.RHY(DW10TD) (66kW)	4/00-6/00				**PF271**	Bdx	Ø 23,81	Alu, -ABS
Partner/Ranch II, Tepee 4/08-								
1.6 HDi Eng.9HX(DV6ATED4) (66kW)	08-		R		**CF158**	Luc	Ø 22,00	
	08-		R		**CF868**	Trw	Ø 22,00	Alu

PIAGGIO

Porter, Van 2/93-								
1.0 Eng.CB41 (33kW)	93-94		R		**CF324**		Ø 17,46	
1.0 Eng.CB42 (35kW)	94-		R		**CF324**		Ø 17,46	
1.2 D Eng.LDW12 (26kW)	95-		R		**CF324**		Ø 17,46	
1.3 16v, 4WD Eng.HCEL (48kW)	98-		R		**CF324**		Ø 17,46	
1.4 D Eng.LDW1404 (28kW)	98-		R		**CF324**		Ø 17,46	

PLYMOUTH

1 Ton - 3/4 Ton								
All models	78-83		R	L	**CF949**		Ø 25,40	12Inch Brake
	78-83		R	R	**CF950**		Ø 25,40	12Inch Brake
Acclaim 1/89-12/95								
All models	1/89-12/89		R		**CF402**		Ø 15,87	
Arrow								
All models	76-80		R	L	**CF379**	Mit.	Ø 19,05	
	76-80		R	R	**CF378**	Mit.	Ø 19,05	
Caravelle								
All models	85-88		R		**CF929**		Ø 14,28	
Champ								
1.4	79-82		R		**CF269**		Ø 19,05	
1.6	79-82		R		**CF269**		Ø 19,05	
2.0	79-82		R		**CF269**		Ø 19,05	
Horizon - TC3								
All models	78-90		R		**CF402**		Ø 15,87	
Neon								
All models	95-97		R		**CF402**		Ø 15,87	
Reliant K								
All models	83-87		R		**CF929**		Ø 14,28	HDB
	81-89		R		**CF402**		Ø 15,87	
Sundance - Shelby Sundance								
All models	87-94		R		**CF402**		Ø 15,87	

PONTIAC

6000 9/91-								
3.8 V6 Eng.L36 (149kW)	88-91		R		**CF952**		Ø 17,46	Exc. SW
	88-91		R		**CF951**		Ø 20,64	SW, FR
6000 - STE 9/86-								
3.8 V6 Eng.LG3 (122kW)	1/82-87		R		**CF930**		Ø 15,87	SW, Exc. Diesel, HDB
	82-87		R		**CF927**		Ø 17,46	Exc. SW
	1/89-12/89		R		**CF784**		Ø 19,05	SW, HDB
	83-87		R		**CF937**		Ø 19,05	Diesel, Exc. SW, HDB
Bonneville								
All models	82-86		R		**CF928**		Ø 19,05	
	87-12/96		R		**CF933**		Ø 22,00	
	77-81		R		**CF934**		Ø 22,20	9Inch Brake
	87-12/96		R		**CF944**		Ø 22,20	
	69-81		R		**CF931**		Ø 23,81	Exc. SW, Commercial, 11Inch Brake
	92-		R		**CF957**		Ø 23,81	
	71-76		R		**CF932**		Ø 25,40	SW, Commercial
Firebird II								
All models	82-88		R		**CF928**		Ø 19,05	
	84-92		R		**CF938**		Ø 19,05	
	70-75		R		**CF934**		Ø 22,20	
	76-81		R		**CF945**		Ø 23,81	
Firebird Trans Am								
All models	82-88		R		**CF928**		Ø 19,05	
	84-92		R		**CF938**		Ø 19,05	
	70-75		R		**CF934**		Ø 22,20	

PONTIAC

		Spare Parts	F/R	L/R	FRITECH ref.		DIMENSIONS mm.	NOTE
All models	76-81		R		**CF945**		Ø 23,81	
Firefly I								
All models	85-87		R		**CF930**		Ø 15,87	
Firefly II								
All models	87-90		R		**CF940**		Ø 15,80	Exc. Performance package
Grand Am I								
All models	91-98		R		**CF952**		Ø 17,46	
	99-00		R		**CF955**		Ø 22,20	
Grand Prix								
All models	78-87		R		**CF928**		Ø 19,05	
	69-75		R		**CF934**		Ø 22,20	
	76-77		R		**CF931**		Ø 23,81	
J2000 - Sunbird - Sunfire I								
1.6	82-87		R		**CF930**		Ø 15,87	Exc. SW
	82-86		R		**CF927**		Ø 17,46	SW
J2000 - Sunbird - Sunfire II								
All models	87-91		R		**CF940**		Ø 15,80	
	85-86		R		**CF952**		Ø 17,46	
Lemans								
2.0	88-93		R		**CF009**		Ø 17,46	
	88-93				**PF161**	Del(EA)	Ø 20,64	Alu
All models	78-81		R		**CF928**		Ø 19,05	
	69-75		R		**CF934**		Ø 22,20	Exc. SW
	64-66		R		**CF945**		Ø 23,81	
	73-77		R		**CF931**		Ø 23,81	SW
Parisienne								
All models	83-86		R		**CF934**		Ø 22,20	Exc. SW, 9,5Inch Brake
	83-86		R		**CF931**		Ø 23,81	Exc. SW, 11Inch Brake
	83-86		R		**CF932**		Ø 25,40	SW, 11Inch Brake
Phoenix								
All models	80-84		R		**CF927**		Ø 17,46	
	77-79		R		**CF945**		Ø 23,81	9Inch Brake
	77-78		R		**CF932**		Ø 25,40	11Inch Brake
Sunbird								
All models	64-66		R		**CF945**		Ø 23,81	
T1000 1/93-3/97								
2.3 (101-108kW)	81-87		R		**CF927**		Ø 17,46	
Trans Sport Van								
All models	90-91		R		**CF784**		Ø 19,05	
	92-93		R		**CF957**		Ø 23,81	
Ventura I-II 1/71-12/77								
All models	71-75		R		**CF934**		Ø 22,20	
	1/76-12/76		R		**CF931**		Ø 23,81	11Inch Brake
	76-77		R		**CF945**		Ø 23,81	9Inch Brake
	1/77-12/77		R		**CF932**		Ø 25,40	11Inch Brake

PORSCHE

911 (997) 7/04-11/12								
3.6 Carrera, Cabrio Eng.M96.05 (239-242kW)	06-				**PF911**	Trw	Ø 23,81	Alu
924 11/75-8/89								
2.0 Eng.XJ (92kW)	11/75-8/89		R		**CF670**		Ø 19,05	
Boxster I (986) 9/96-12/04								
2.5 Eng.M96.20 (150kW)	96-99				**CZ036**	Fte	Ø 22,20	Ch -98XS603069
	-99				**CZ074**	Sachs	Ø 22,20	Ch 98XS603070-, Pla
	-99				**CZ096**	Sachs	Ø 22,20	Ch 98XS603070-
2.7 Eng.M96.22 (162kW)	99-02				**CZ036**	Fte	Ø 22,20	Ch -98XS603069
	99-02				**CZ074**	Sachs	Ø 22,20	Ch 98XS603070-, Pla
	99-02				**CZ096**	Sachs	Ø 22,20	Ch 98XS603070-
2.7 Eng.M96.23 (168kW)	02-				**CZ074**	Sachs	Ø 22,20	Pla
	02-				**CZ096**	Sachs	Ø 22,20	
2.7 (155kW)	99-02				**CZ036**	Fte	Ø 22,20	Ch -98XS603069
Boxster I (987) 1/04-11/07								
2.7 Eng.M96.25 (176kW)	04-				**PF911**	Trw	Ø 23,81	Alu

PORSCHE

		Spare Parts	F/R	L/R	FRITECH ref.		DIMENSIONS mm.	NOTE
3.2 S Eng.M96.26 (206kW)	04-				**PF911**	Trw	Ø 23,81	Alu
Boxster II (987) 12/07-12/11								
2.7 Eng.M97.20 (180kW)	07-				**PF911**	Trw	Ø 23,81	Alu
2.9 Eng.MA1.20 (188kW)	09-				**PF911**	Trw	Ø 23,81	Alu
3.4 S Eng.M97.21 (217kW)	07-				**PF911**	Trw	Ø 23,81	Alu
3.4 S Eng.MA1.21 (228kW)	09-				**PF911**	Trw	Ø 23,81	Alu
3.4 S Eng.MA1.21 (235kW)	10-				**PF911**	Trw	Ø 23,81	Alu
Cayman I (987) 11/05-3/13								
2.7 Eng.M97.20 (180kW)	06-				**PF911**	Trw	Ø 23,81	Alu
2.9 Eng.MA1.20 (195kW)	09-				**PF911**	Trw	Ø 23,81	Alu
3.4 R Eng.MA1.21 (243kW)	11-				**PF911**	Trw	Ø 23,81	Alu
3.4 S Eng.M97.21 (217kW)	05-				**PF911**	Trw	Ø 23,81	Alu
3.4 S Eng.MA1.21 (235kW)	09-				**PF911**	Trw	Ø 23,81	Alu

PROTON

Persona 300 3/96-12/06								
313i Eng.G13B (55kW)	96-		R		**CF572**		Ø 19,05	
315 GLi/GLSi Eng.4G15P (66kW)	96-		R		**CF572**		Ø 19,05	
315 GLSi Eng.G15B (64kW)	96-		R		**CF572**		Ø 19,05	
Persona 400 1/94-12/06								
413 Eng.4G13 (55kW)	94-		R		**CF572**		Ø 19,05	
415 GLi/GLSi Eng.4G15 (66kW)	94-		R		**CF572**		Ø 19,05	
420 GLS D Eng.4D68 (48kW)	96-		R		**CF572**		Ø 19,05	
420 TD Eng.4D68 (60kW)	96-		R		**CF572**		Ø 19,05	
Saga								
All models Eng.4G13			R		**CF269**		Ø 19,05	

RELIANT

Fox 1/82-1/90								
All models	82-90		F	L	**CF334**	Loc	Ø 20,32	
	82-90		F	R	**CF336**	Loc	Ø 20,32	
	82-90		R		**CF191**	Loc	Ø 19,05	
Kitten, SW 1/75-12/83								
0.85 (30kW)	78-83		F	L	**CF334**	Loc	Ø 20,32	
	75-78		F	L	**CF190**		Ø 23,81	Berlina, Cabrio
	78-83		F	R	**CF336**	Loc	Ø 20,32	
	75-78		F	R	**CF189**		Ø 23,81	Berlina, Cabrio
	75-83		R		**CF191**	Loc	Ø 19,05	
Rebel 1/68-12/73								
0.7 (23kW)	68-71		F	L	**CF192**		Ø 19,05	
	68-71		R		**CF335**		Ø 19,05	Alu
0.75 (24kW)	71-73		F	L	**CF192**		Ø 19,05	
	71-73		R		**CF335**		Ø 19,05	Alu
Regal 1/62-1/73								
All models	62-73		F	L	**CF192**		Ø 19,05	
	62-73		R		**CF335**		Ø 19,05	Alu
Regent 1/59-1/64								
VAN 10CWT	59-64		F	L	**CF192**		Ø 19,05	
	59-64		R		**CF261**		Ø 17,78	Alu
Rialto 1/82-								
All models	82-		F		**CF190**		Ø 23,81	
	82-		R		**CF191**	Loc	Ø 19,05	
	82-		R		**CF261**	Luc	Ø 17,78	Alu
Robin 1/75-								
All models	75-		F	L	**CF192**		Ø 19,05	
	75-		F		**CF190**		Ø 23,81	
	75-		R		**CF191**	Loc	Ø 19,05	
	75-		R		**CF261**		Ø 17,78	Alu
	75-		R		**CF335**		Ø 19,05	Alu
Scimitar Cabrio 1/80-12/85								
2.8 GTC (99kW)	80-85		R		**CF007**		Ø 17,78	SS1
	80-85		R		**CF373**		Ø 19,05	Alu, GTC, GTE, V6 Coupè

RELIANT

		Spare Parts	F/R	L/R	FRITECH ref.		DIMENSIONS mm.	NOTE
Scimitar Roadster 1/85-12/90								
1.3 (51kW)	-87		R		**CF007**		Ø 17,78	SS1
	-87		R		**CF373**		Ø 19,05	Alu, GTC, GTE, V6 Coupè
1.4 (55kW)	87-90		R		**CF007**		Ø 17,78	SS1
	87-90		R		**CF373**		Ø 19,05	Alu, GTC, GTE, V6 Coupè
1.6 (71kW)	-90		R		**CF007**		Ø 17,78	SS1
	-90		R		**CF373**		Ø 19,05	Alu, GTC, GTE, V6 Coupè
1.8 Ti Eng.CA18ET (99kW)	86-90		R		**CF007**		Ø 17,78	SS1
	86-90		R		**CF373**		Ø 19,05	Alu, GTC, GTE, V6 Coupè
Scimitar Sabre Roadster 1/92-12/95								
1.4 (55kW)	1/93-8/93		R		**CF007**		Ø 17,78	SS1
	1/93-8/93		R		**CF373**		Ø 19,05	Alu, GTC, GTE, V6 Coupè
1.4 i (76kW)	93-95		R		**CF007**		Ø 17,78	SS1
	93-95		R		**CF373**		Ø 19,05	Alu, GTC, GTE, V6 Coupè
1.8 Ti Eng.CA18ET (99kW)	92-94		R		**CF007**		Ø 17,78	SS1
	92-94		R		**CF373**		Ø 19,05	Alu, GTC, GTE, V6 Coupè
2.0 i Eng.20T4H (99kW)	94-95		R		**CF007**		Ø 17,78	SS1
	94-95		R		**CF373**		Ø 19,05	Alu, GTC, GTE, V6 Coupè
Scimitar SW 1/68-12/86								
2.8 GTE (99kW)	80-86		R		**CF007**		Ø 17,78	SS1
	80-86		R		**CF373**		Ø 19,05	Alu, GTC, GTE, V6 Coupè
3.0 GTE (99kW)	68-79		R		**CF007**		Ø 17,78	SS1
	68-79		R		**CF373**		Ø 19,05	Alu, GTC, GTE, V6 Coupè

RENAULT

Alliance-Encore 1/83-1/87								
All models	83-87		R		**CF724**		Ø 20,64	
Alpine 10/84-12/92								
2.4 V6 T. (B295) Eng.Z7U702 (133-136kW)	84-				**PF176**	Bdx	Ø 23,81	
2.5 V6 T. (B29G) Eng.Z7U700 (147-151kW)	90-92				**PF176**	Bdx	Ø 23,81	
2.8 V6 (B293) Eng.Z6W700 (115kW)	87-				**PF176**	Bdx	Ø 23,81	
Avantime (DE0) 9/01-5/03								
2.0 16v T. Eng.F4R760/ 761 (88-99-103-120-124kW)	01-03				**PF285**	Ate	Ø 23,81	Alu, +ABS, -ASR
2.2 DCi Eng.G9T702/ 742/ 743 (110kW)	02-				**PF285**	Ate	Ø 23,81	Alu, +ABS, -ASR
	02-03				**PF850**	Ate	Ø 23,81	Alu, +ABS, +ASR
3.0 V6 24v Eng.L7X722 (152kW)	01-03				**PF285**	Ate	Ø 23,81	Alu, +ABS, -ASR
	01-03				**PF850**	Ate	Ø 23,81	Alu, +ABS, +ASR
Captur 6/13-								
0.9 TCe Eng.H4B400 (66kW)	13-		R		**CF854**	Bch	Ø 22,00	Alu
Clio I (B/C57, 5/357) 5/90-9/98								
1.1 (B/C571) Eng.C1E700 (25-33-35kW)	1/91-2/91		R	L	**CF025**	Bdx	Ø 20,64	CRCI
	3/91-98		R	L	**CF072**	Bdx	Ø 20,64	CRCI
	1/91-2/91		R	L	**CF042**	Luc	Ø 20,64	CRCI
	3/91-98		R	L	**CF043**	Luc	Ø 20,64	CRCI
	1/91-2/91		R	R	**CF026**	Bdx	Ø 20,64	CRCI
	3/91-98		R	R	**CF073**	Bdx	Ø 20,64	CRCI
	1/91-2/91		R	R	**CF043**	Luc	Ø 20,64	CRCI
	3/91-98		R	R	**CF042**	Luc	Ø 20,64	CRCI
	1/91-96				**PF008**	Ate	Ø 19,00	-ABS
	3/96-98				**PF007**	Ate	Ø 20,64	-ABS
	3/96-98				**PF211**	Bdx	Ø 20,64	+ABS, LHD
1.2 (5/357Y, 5/357K) Eng.D7F730 (40-43kW)	96-98		R	L	**CF072**	Bdx	Ø 20,64	CRCI
	96-98		R	L	**CF043**	Luc	Ø 20,64	CRCI
	96-98		R	R	**CF073**	Bdx	Ø 20,64	CRCI
	96-98		R	R	**CF042**	Luc	Ø 20,64	CRCI
	1/96-12/96				**PF008**	Ate	Ø 19,00	-ABS
	97-98				**PF007**	Ate	Ø 20,64	-ABS
	1/96-12/96				**PF131**	Bdx	Ø 20,64	+ABS, LHD
	3/96-98				**PF211**	Bdx	Ø 20,64	+ABS, LHD
1.2 (B/C/S572) Eng.E5F710 (44kW)	3/91-96		R	L	**CF072**	Bdx	Ø 20,64	CRCI
	5/90-2/91		R	L	**CF025**	Bdx	Ø 20,64	CRCI
	3/91-96		R	L	**CF043**	Luc	Ø 20,64	CRCI
	5/90-2/91		R	L	**CF042**	Luc	Ø 20,64	CRCI

		Spare Parts	F/R	L/R	FRITECH ref.		DIMENSIONS mm.	NOTE
1.2 (B/C/S572) Eng.E5F710 (44kW)	3/91-96		R	R	**CF073**	Bdx	Ø 20,64	CRCI
	5/90-2/91		R	R	**CF026**	Bdx	Ø 20,64	CRCI
	3/91-96		R	R	**CF042**	Luc	Ø 20,64	CRCI
	5/90-2/91		R	R	**CF043**	Luc	Ø 20,64	CRCI
	5/90-96				**PF008**	Ate	Ø 19,00	-ABS
	94-96				**PF131**	Bdx	Ø 20,64	+ABS, LHD
1.2 (B/C/S577) Eng.C3G720 (40kW)	1/96-12/96		R	L	**CF072**	Bdx	Ø 20,64	CRCI
	1/96-12/96		R	L	**CF043**	Luc	Ø 20,64	CRCI
	1/96-12/96		R	R	**CF073**	Bdx	Ø 20,64	CRCI
	1/96-12/96		R	R	**CF042**	Luc	Ø 20,64	CRCI
	1/96-12/96				**PF008**	Ate	Ø 19,00	-ABS
	1/96-12/96				**PF211**	Bdx	Ø 20,64	+ABS, LHD
1.2 (B/C/S57A/R/S, 5/357F/L/R) Eng.E7F700/ 750/	3/91-98		R	L	**CF072**	Bdx	Ø 20,64	CRCI
708/ 706/ C3G (40-43kW)	5/90-2/91		R	L	**CF025**	Bdx	Ø 20,64	CRCI
	3/91-98		R	L	**CF043**	Luc	Ø 20,64	CRCI
	5/90-2/91		R	L	**CF042**	Luc	Ø 20,64	CRCI
	3/91-98		R	R	**CF073**	Bdx	Ø 20,64	CRCI
	5/90-2/91		R	R	**CF026**	Bdx	Ø 20,64	CRCI
	3/91-98		R	R	**CF042**	Luc	Ø 20,64	CRCI
	5/90-2/91		R	R	**CF043**	Luc	Ø 20,64	CRCI
	5/90-96				**PF008**	Ate	Ø 19,00	-ABS
	96-98				**PF007**	Ate	Ø 20,64	-ABS
	94-96				**PF131**	Bdx	Ø 20,64	+ABS, LHD
	96-98				**PF211**	Bdx	Ø 20,64	+ABS, LHD
1.4 (B/C57T/Y/J) Eng.E7J710/ 711/ 718/ 719/ 754/	1/91-2/91		R	L	**CF025**	Bdx	Ø 20,64	CRCI
756/ 757 (55-58-59kW)	3/91-98		R	L	**CF072**	Bdx	Ø 20,64	CRCI
	1/91-2/91		R	L	**CF042**	Luc	Ø 20,64	CRCI
	3/91-98		R	L	**CF043**	Luc	Ø 20,64	CRCI
	1/91-2/91		R	R	**CF026**	Bdx	Ø 20,64	CRCI
	3/91-98		R	R	**CF073**	Bdx	Ø 20,64	CRCI
	1/91-2/91		R	R	**CF043**	Luc	Ø 20,64	CRCI
	3/91-98		R	R	**CF042**	Luc	Ø 20,64	CRCI
	1/91-98				**PF008**	Ate	Ø 19,00	-ABS
	1/91-98				**PF007**	Ate	Ø 20,64	-ABS
	1/91-3/96				**PF131**	Bdx	Ø 20,64	+ABS, LHD
	3/96-98				**PF211**	Bdx	Ø 20,64	+ABS, LHD
1.7 (B/C574) Eng.F2N770 (55-59-64-68kW)	1/91-2/91		R	L	**CF025**	Bdx	Ø 20,64	CRCI
	3/91-12/93		R	L	**CF072**	Bdx	Ø 20,64	CRCI
	1/91-2/91		R	L	**CF042**	Luc	Ø 20,64	CRCI
	3/91-12/93		R	L	**CF043**	Luc	Ø 20,64	CRCI
	1/91-2/91		R	R	**CF026**	Bdx	Ø 20,64	CRCI
	3/91-12/93		R	R	**CF073**	Bdx	Ø 20,64	CRCI
	1/91-2/91		R	R	**CF043**	Luc	Ø 20,64	CRCI
	3/91-12/93		R	R	**CF042**	Luc	Ø 20,64	CRCI
	91-93				**PF007**	Ate	Ø 20,64	-ABS
	91-93				**PF131**	Bdx	Ø 20,64	+ABS, LHD
1.8 (B/C578) Eng.F3P754/ 755 (64-66kW)	94-98		R	L	**CF072**	Bdx	Ø 20,64	CRCI
	94-98		R	L	**CF043**	Luc	Ø 20,64	CRCI
	94-98		R	R	**CF073**	Bdx	Ø 20,64	CRCI
	94-98		R	R	**CF042**	Luc	Ø 20,64	CRCI
	96-98				**PF008**	Ate	Ø 19,00	-ABS, RHD
	94-96				**PF007**	Ate	Ø 20,64	-ABS, LHD
	96-98				**PF597**	Bch	Ø 19,05	+ABS, RHD
	96-98				**PF211**	Bdx	Ø 20,64	+ABS, LHD
1.8 (B/C57C/U) Eng.F3P710/ 714 (65kW)	91-98		R	L	**CF072**	Bdx	Ø 20,64	CRCI
	91-98		R	L	**CF043**	Luc	Ø 20,64	CRCI
	91-98		R	R	**CF073**	Bdx	Ø 20,64	CRCI
	91-98		R	R	**CF042**	Luc	Ø 20,64	CRCI
	91-98				**PF008**	Ate	Ø 19,00	-ABS, RHD
	91-98				**PF007**	Ate	Ø 20,64	-ABS, LHD
	91-98				**PF597**	Bch	Ø 19,05	+ABS, RHD
	91-98				**PF211**	Bdx	Ø 20,64	+ABS, LHD
1.8 16v (C57D) Eng.F7P722 (99-101kW)	91-94				**PF008**	Ate	Ø 19,00	-ABS, RHD
	91-94				**PF007**	Ate	Ø 20,64	-ABS, LHD

RENAULT

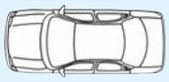		Spare Parts	F/R	L/R	FRITECH ref.		DIMENSIONS mm.	NOTE
1.8 16v (C57D) Eng.F7P722 (99-101kW)	91-94				**PF131**	Bdx	Ø 20,64	+ABS, LHD
1.8 Rsi (B/C579) Eng.F3P712 (79kW)	93-95				**PF008**	Ate	Ø 19,00	-ABS, RHD
	93-95				**PF007**	Ate	Ø 20,64	-ABS, LHD
	93-95				**PF131**	Bdx	Ø 20,64	+ABS, LHD
1.8 Rsi (B/C57H) Eng.F3P758 (79-80-81kW)	95-98				**PF008**	Ate	Ø 19,00	-ABS, RHD
	95-98				**PF007**	Ate	Ø 20,64	-ABS, LHD
	95-98				**PF597**	Bch	Ø 19,05	+ABS, RHD
	95-98				**PF131**	Bdx	Ø 20,64	+ABS, LHD
1.9 D Eng.F8Q676/ 696 (48kW)	96-98		R	L	**CF072**	Bdx	Ø 20,64	CRCI
	96-98		R	L	**CF043**	Luc	Ø 20,64	CRCI
	96-98		R	R	**CF073**	Bdx	Ø 20,64	CRCI
	96-98		R	R	**CF042**	Luc	Ø 20,64	CRCI
	96-98				**PF008**	Ate	Ø 19,00	-ABS
	96-98				**PF007**	Ate	Ø 20,64	-ABS
	3/96-98				**PF597**	Bch	Ø 19,05	+ABS, RHD
	3/96-98				**PF211**	Bdx	Ø 20,64	+ABS, LHD
1.9 D (B/C/57I) Eng.F8Q640/ 682 (40kW)	97-98		R	L	**CF072**	Bdx	Ø 20,64	CRCI
	97-98		R	L	**CF043**	Luc	Ø 20,64	CRCI
	97-98		R	R	**CF073**	Bdx	Ø 20,64	CRCI
	97-98		R	R	**CF042**	Luc	Ø 20,64	CRCI
	97-98				**PF007**	Ate	Ø 20,64	-ABS
	97-98				**PF211**	Bdx	Ø 20,64	+ABS, LHD
1.9 D (B/C/S576/57L) Eng.F8Q730/ 732	1/91-2/91		R	L	**CF025**	Bdx	Ø 20,64	CRCI
(47-66-68kW)	3/91-98		R	L	**CF072**	Bdx	Ø 20,64	CRCI
	1/91-2/91		R	L	**CF042**	Luc	Ø 20,64	CRCI
	3/91-98		R	L	**CF043**	Luc	Ø 20,64	CRCI
	1/91-2/91		R	R	**CF026**	Bdx	Ø 20,64	CRCI
	3/91-98		R	R	**CF073**	Bdx	Ø 20,64	CRCI
	1/91-2/91		R	R	**CF043**	Luc	Ø 20,64	CRCI
	3/91-98		R	R	**CF042**	Luc	Ø 20,64	CRCI
	1/91-98				**PF008**	Ate	Ø 19,00	-ABS
	1/91-98				**PF007**	Ate	Ø 20,64	-ABS
	3/96-98				**PF597**	Bch	Ø 19,05	+ABS, RHD
	1/91-96				**PF131**	Bdx	Ø 20,64	+ABS, LHD
	3/96-98				**PF211**	Bdx	Ø 20,64	+ABS, LHD
2.0 Williams (B/C57M) Eng.F7R700 (108kW)	94-98				**PF007**	Ate	Ø 20,64	-ABS
Electric RT Eng.2DB701 (21kW)	96-98		R		**CF089**	Luc	Ø 22,20	
	3/96-98				**PF007**	Ate	Ø 20,64	-ABS
	96-98				**PF211**	Bdx	Ø 20,64	+ABS
Clio II (B/C/B0/1) 9/98-5/05								
1.2 (B/CB0F/A, B/CB1O/K, B/CB2 D/H)	9/98-		R		**CF256**	Bch	Ø 17,46	Alu, +ABS
Eng.D7F710/ 720/ 726 (40-43kW)	9/98-		R		**CF144**	Bch	Ø 19,05	-ABS
	9/98-		R		**CF161**	Luc	Ø 17,78	+ABS
	9/98-				**PF438**	Ate	Ø 20,64	Alu, +ABS
	9/98-				**PF288**	Ate	Ø 20,64	Alu, -ABS
	9/98-				**PF437**	Bch	Ø 20,64	Alu, +ABS
	9/98-				**PF436**	Bch	Ø 20,64	Alu, -ABS, LHD/RHD
1.2 16v (B/CB05) Eng.D4F712/ 714/ 722/ 728	6/01-		R		**CF256**	Bch	Ø 17,46	Alu, +ABS
(55kW)	6/01-		R		**CF161**	Luc	Ø 17,78	+ABS
	6/01-				**PF438**	Ate	Ø 20,64	Alu, +ABS
	6/01-				**PF437**	Bch	Ø 20,64	Alu, +ABS
1.4 (B/CB0C) Eng.E7J780 (55kW)	9/98-		R		**CF256**	Bch	Ø 17,46	Alu, +ABS
	9/98-		R		**CF144**	Bch	Ø 19,05	-ABS
	9/98-		R		**CF161**	Luc	Ø 17,78	+ABS
	9/98-				**PF438**	Ate	Ø 20,64	Alu, +ABS
	9/98-				**PF288**	Ate	Ø 20,64	Alu, -ABS
	9/98-				**PF437**	Bch	Ø 20,64	Alu, +ABS
	9/98-				**PF436**	Bch	Ø 20,64	Alu, -ABS, LHD/RHD
1.4 16v (B/CB0L) Eng.K4J712/ 713 (70kW)	99-8/00		R		**CF256**	Bch	Ø 17,46	Alu, +ABS
	99-8/00		R		**CF144**	Bch	Ø 19,05	-ABS
	99-8/00		R		**CF161**	Luc	Ø 17,78	+ABS
	99-8/00				**PF438**	Ate	Ø 20,64	Alu, +ABS
	99-8/00				**PF288**	Ate	Ø 20,64	Alu, -ABS
	99-8/00				**PF437**	Bch	Ø 20,64	Alu, +ABS

		Spare Parts	F/R	L/R	FRITECH ref.		DIMENSIONS mm.	NOTE
1.4 16v (B/CB0L) Eng.K4J712/ 713 (70kW)	99-8/00				**PF436**	Bch	Ø 20,64	Alu, -ABS, LHD/RHD
1.4 16v (B/CB0P) Eng.K4J700/ 712/ 713 (72kW)	00-		R		**CF256**	Bch	Ø 17,46	Alu, +ABS
	00-		R		**CF144**	Bch	Ø 19,05	-ABS
	00-		R		**CF161**	Luc	Ø 17,78	+ABS
	00-01				**PF438**	Ate	Ø 20,64	Alu, +ABS
	00-01				**PF288**	Ate	Ø 20,64	Alu, -ABS
	01-				**PF598**	Ate	Ø 20,64	Alu, +TC
	00-01				**PF437**	Bch	Ø 20,64	Alu, +ABS, LHD/RHD
	00-01				**PF436**	Bch	Ø 20,64	Alu, -ABS, LHD/RHD
1.5 DCi Eng.K9K702 (59kW)	01-03		R		**CF256**	Bch	Ø 17,46	Alu, +ABS
	01-03		R		**CF161**	Luc	Ø 17,78	+ABS
	01-03				**PF438**	Ate	Ø 20,64	Alu, +ABS, -TC
	01-03				**PF598**	Ate	Ø 20,64	Alu, +ABS, +TC
	01-03				**PF437**	Bch	Ø 20,64	Alu, +ABS
	01-03				**PF436**	Bch	Ø 20,64	Alu, -ABS, LHD/RHD
1.5 DCi Eng.K9K712 (74kW)	04-05		R		**CF256**	Bch	Ø 17,46	Alu, +ABS
	04-05		R		**CF161**	Luc	Ø 17,78	+ABS
	04-05				**PF438**	Ate	Ø 20,64	Alu, +ABS, -TC
	04-05				**PF598**	Ate	Ø 20,64	Alu, +ABS, +TC
	04-05				**PF437**	Bch	Ø 20,64	Alu, +ABS
1.5 DCi (B/CB07) Eng.K9K700/ 704 (48kW)	01-		R		**CF161**	Luc	Ø 17,78	+ABS
	01-				**PF438**	Ate	Ø 20,64	Alu, +ABS
	01-				**PF437**	Bch	Ø 20,64	Alu, +ABS
	01-				**PF436**	Bch	Ø 20,64	Alu, -ABS, LHD/RHD
1.5 DCi (B/CB08) Eng.K9K702/ 710/ 722 (60kW)	01-05		R		**CF256**	Bch	Ø 17,46	Alu, +ABS
	01-05		R		**CF161**	Luc	Ø 17,78	+ABS
	01-05				**PF438**	Ate	Ø 20,64	Alu, +ABS, -TC
	01-05				**PF598**	Ate	Ø 20,64	Alu, +ABS, +TC
	01-05				**PF437**	Bch	Ø 20,64	Alu, +ABS
	01-05				**PF436**	Bch	Ø 20,64	Alu, -ABS, LHD/RHD
1.6 (B/CB0D) Eng.K7M744/ 745 (55-66kW)	9/98-		R		**CF256**	Bch	Ø 17,46	Alu, +ABS
	9/98-		R		**CF161**	Luc	Ø 17,78	+ABS
	9/98-				**PF438**	Ate	Ø 20,64	Alu, +ABS
	9/98-				**PF437**	Bch	Ø 20,64	Alu, +ABS
	9/98-				**PF436**	Bch	Ø 20,64	Alu, -ABS, LHD/RHD
1.6 16v (CB0T/H) Eng.K4M708/ 748 (70-79-83kW)	9/98-		R		**CF161**	Luc	Ø 17,78	+ABS
	9/98-				**PF438**	Ate	Ø 20,64	Alu, +ABS
	01-				**PF598**	Ate	Ø 20,64	Alu, +TC
	9/98-				**PF437**	Bch	Ø 20,64	Alu, +ABS
	9/98-				**PF436**	Bch	Ø 20,64	Alu, -ABS, LHD/RHD
1.9 D (B/CB0E) Eng.F8Q606/ 630/ 632/ 662	9/98-		R		**CF256**	Bch	Ø 17,46	Alu, +ABS
(40-44-47kW)	9/98-		R		**CF144**	Bch	Ø 19,05	-ABS
	9/98-		R		**CF161**	Luc	Ø 17,78	+ABS
	9/98-				**PF438**	Ate	Ø 20,64	Alu, +ABS
	9/98-				**PF288**	Ate	Ø 20,64	Alu, -ABS
	9/98-				**PF437**	Bch	Ø 20,64	Alu, +ABS
	9/98-				**PF436**	Bch	Ø 20,64	Alu, -ABS, LHD/RHD
1.9 DTi (B/CB0U) Eng.F9Q780	2/00-		R		**CF256**	Bch	Ø 17,46	Alu, +ABS
(59-68-75-77-81-88-96kW)	2/00-		R		**CF161**	Luc	Ø 17,78	+ABS
	2/00-				**PF438**	Ate	Ø 20,64	Alu, +ABS
	2/00-				**PF437**	Bch	Ø 20,64	Alu, +ABS, LHD/RHD
	2/00-				**PF436**	Bch	Ø 20,64	Alu, -ABS, LHD/RHD
Clio III (BR/CR0/1) 6/05-7/12								
1.2 Eng.D7F800/D4F764 (43kW)	06-		R		**CF780**	Loc	Ø 19,05	Alu
1.2 16v Eng.D4F740 (48kW)	05-		R		**CF780**	Loc	Ø 19,05	Alu, -ESP, -TC
	05-				**PF908**	Ate	Ø 23,80	Alu, +ABS, +ESP
	05-				**PF715**	Ate	Ø 23,81	Alu, +ABS, -ESP
	05-				**PF714**	Ate	Ø 23,81	Alu, -ABS
1.2 16v Eng.D4F740 (55kW)	05-		R		**CF780**	Loc	Ø 19,05	Alu, -ESP, -TC
	05-				**PF908**	Ate	Ø 23,80	Alu, +ABS, +ESP
	05-				**PF715**	Ate	Ø 23,81	Alu, +ABS, -ESP
	05-				**PF714**	Ate	Ø 23,81	Alu, -ABS
1.2 16v Eng.D4F764 (58kW)	05-		R		**CF780**	Loc	Ø 19,05	Alu, -ESP, -TC
	05-				**PF715**	Ate	Ø 23,81	Alu, +ABS, -ESP

RENAULT

		Spare Parts	F/R	L/R	FRITECH ref.		DIMENSIONS mm.	NOTE
1.2 16v Eng.D4F764 (58kW)	05-				**PF714**	Ate	Ø 23,81	Alu, -ABS
1.2 16v Eng.D4F786 (76kW)	10-		R		**CF780**	Loc	Ø 19,05	Alu
	10-				**PF812**	Ate	Ø 23,81	Alu, +ABS, +ESP
	10-				**PF530**	Ate	Ø 23,81	Alu, +ABS, -ESP
	10-				**PF714**	Ate	Ø 23,81	Alu, -ABS
1.2 16v TCE Eng.D4F784 (74kW)	07-		R		**CF780**	Loc	Ø 19,05	Alu
	07-				**PF715**	Ate	Ø 23,81	Alu, +ABS, -ESP
1.4 16v Eng.K4J780 (70-72kW)	05-		R		**CF780**	Loc	Ø 19,05	Alu, -ESP, -TC
	05-				**PF908**	Ate	Ø 23,80	Alu, +ABS, +ESP
	05-				**PF715**	Ate	Ø 23,81	Alu, +ABS, -ESP
	05-				**PF714**	Ate	Ø 23,81	Alu, -ABS
1.5 DCi Eng.K9K740 (47kW)	05-		R		**CF780**	Loc	Ø 19,05	Alu, -ESP, -TC
	05-				**PF715**	Ate	Ø 23,81	Alu, +ABS, -ESP
	05-				**PF714**	Ate	Ø 23,81	Alu, -ABS
1.5 DCi Eng.K9K752 (48kW)	05-		R		**CF780**	Loc	Ø 19,05	Alu, -ESP, -TC
	05-				**PF715**	Ate	Ø 23,81	Alu, +ABS, -ESP
	05-				**PF714**	Ate	Ø 23,81	Alu, -ABS
1.5 DCi Eng.K9K764 (78kW)	05-		R		**CF780**	Loc	Ø 19,05	Alu, -ESP, -TC
	05-				**PF908**	Ate	Ø 23,80	Alu, +ABS, +ESP
	05-				**PF715**	Ate	Ø 23,81	Alu, +ABS, -ESP
	05-				**PF714**	Ate	Ø 23,81	Alu, -ABS
1.5 DCi Eng.K9K766 (63kW)	05-		R		**CF780**	Loc	Ø 19,05	Alu, -ESP, -TC
	05-				**PF908**	Ate	Ø 23,80	Alu, +ABS, +ESP
	05-				**PF715**	Ate	Ø 23,81	Alu, +ABS, -ESP
	05-				**PF714**	Ate	Ø 23,81	Alu, -ABS
1.5 DCi Eng.K9K768 (50kW)	05-		R		**CF780**	Loc	Ø 19,05	Alu, -ESP, -TC
	05-				**PF908**	Ate	Ø 23,80	Alu, +ABS, +ESP
	05-				**PF715**	Ate	Ø 23,81	Alu, +ABS, -ESP
	05-				**PF714**	Ate	Ø 23,81	Alu, -ABS
1.5 DCi Eng.K9K770 (55kW)	10-		R		**CF780**	Loc	Ø 19,05	Alu
	10-				**PF812**	Ate	Ø 23,81	Alu, +ABS, +ESP
	10-				**PF530**	Ate	Ø 23,81	Alu, +ABS, -ESP
	10-				**PF714**	Ate	Ø 23,81	Alu, -ABS
1.5 DCi Eng.K9K772/ 776 (76kW)	05-		R		**CF780**	Loc	Ø 19,05	Alu
	05-				**PF715**	Ate	Ø 23,81	Alu, +ABS, -ESP
	05-				**PF714**	Ate	Ø 23,81	Alu, -ABS
1.5 Dci, Storia Eng.K9K718/ 750 (60-62kW)	07-		R		**CF852**	Luc	Ø 17,78	Alu, Storia, +ABS
	07-		R		**CF161**	Luc	Ø 17,78	-ABS
	07-				**PF715**	Ate	Ø 23,81	Alu, +ABS, -ESP
	07-				**PF714**	Ate	Ø 23,81	Alu, -ABS
1.6 16v Eng.K4M800/ 801 (82kW)	05-		R		**CF780**	Loc	Ø 19,05	Alu, -ESP, -TC
	05-				**PF908**	Ate	Ø 23,80	Alu, +ABS, +ESP
	05-				**PF715**	Ate	Ø 23,81	Alu, +ABS, -ESP
	05-				**PF714**	Ate	Ø 23,81	Alu, -ABS
1.6 16v Eng.K4M804 (65kW)	05-		R		**CF780**	Loc	Ø 19,05	Alu, -ESP, -TC
	05-				**PF908**	Ate	Ø 23,80	Alu, +ABS, +ESP
	05-				**PF715**	Ate	Ø 23,81	Alu, +ABS, -ESP
	05-				**PF714**	Ate	Ø 23,81	Alu, -ABS
1.6 16V GT Eng.K4M862 (94kW)	09-		R		**CF780**	Loc	Ø 19,05	Alu
	10-				**PF812**	Ate	Ø 23,81	Alu, +ABS, +ESP
	10-				**PF530**	Ate	Ø 23,81	Alu, +ABS, -ESP
	10-				**PF714**	Ate	Ø 23,81	Alu, -ABS
2.0 16v Eng.F4R830 (148kW)	09-		R		**CF780**	Loc	Ø 19,05	Alu
	09-				**PF908**	Ate	Ø 23,80	Alu, +ABS, +ESP
2.0 16v Eng.M4R700 (105kW)	05-				**PF908**	Ate	Ø 23,80	Alu, +ABS, +ESP
	06-				**PF715**	Ate	Ø 23,81	Alu, +ABS, -ESP
2.0 16v Sport Eng.F4R830 (145kW)	06-		R		**CF780**	Loc	Ø 19,05	Alu
	06-				**PF715**	Ate	Ø 23,81	Alu, +ABS, -ESP
Clio III, Grandtour (KR0/1) 2/08-7/12								
1.2 16v Eng.D4F740 (55kW)	08-		R		**CF780**	Loc	Ø 19,05	Alu
	08-				**PF715**	Ate	Ø 23,81	Alu, +ABS, -ESP
	08-				**PF714**	Ate	Ø 23,81	Alu, -ABS
1.2 16v Eng.D4F764 (58kW)	08-		R		**CF780**	Loc	Ø 19,05	Alu, -ESP, -TC
	08-				**PF715**	Ate	Ø 23,81	Alu, +ABS, -ESP

		Spare Parts	F/R	L/R	FRITECH ref.		DIMENSIONS mm.	NOTE
1.2 16v Eng.D4F764 (58kW)	08-				**PF714**	Ate	Ø 23,81	Alu, -ABS
1.2 16v Eng.D4F784 (74kW)	08-		R		**CF780**	Loc	Ø 19,05	Alu
	08-				**PF530**	Ate	Ø 23,81	Alu, +ABS, +ESP
	08-				**PF715**	Ate	Ø 23,81	Alu, +ABS, -ESP
	08-				**PF714**	Ate	Ø 23,81	Alu, -ABS
1.5 DCi Eng.K9K764 (78kW)	08-				**PF715**	Ate	Ø 23,81	Alu, +ABS, -ESP
	08-				**PF714**	Ate	Ø 23,81	Alu, -ABS
1.5 DCi Eng.K9K766 (63kW)	08-		R		**CF780**	Loc	Ø 19,05	Alu
	08-				**PF715**	Ate	Ø 23,81	Alu, +ABS, -ESP
	08-				**PF714**	Ate	Ø 23,81	Alu, -ABS
1.5 DCi Eng.K9K768 (50kW)	08-		R		**CF780**	Loc	Ø 19,05	Alu
	08-				**PF715**	Ate	Ø 23,81	Alu, +ABS, -ESP
	08-				**PF714**	Ate	Ø 23,81	Alu, -ABS
1.5 DCi Eng.K9K772/ 776 (76kW)	08-		R		**CF780**	Loc	Ø 19,05	Alu
	08-				**PF715**	Ate	Ø 23,81	Alu, +ABS, -ESP
	08-				**PF714**	Ate	Ø 23,81	Alu, -ABS
1.6 16v Eng.K4M800/ 801 (82kW)	08-		R		**CF780**	Loc	Ø 19,05	Alu
	08-				**PF715**	Ate	Ø 23,81	Alu, +ABS, -ESP
	08-				**PF714**	Ate	Ø 23,81	Alu, -ABS
Clio IV, Sporter, Grandtour 9/12-								
0.9 TCe Eng.H4B400 (66kW)	12-		R		**CF256**	Bch	Ø 17,46	Alu, 15/16Inch Wheels
	12-		R		**CF869**	Bch	Ø 19,05	Alu, 17Inch Wheels
1.2 16v Eng.D4F740 (55kW)	12-		R		**CF256**	Bch	Ø 17,46	Alu, 15/16Inch Wheels
	12-		R		**CF869**	Bch	Ø 19,05	Alu, 17Inch Wheels
1.2 GPL Eng.D4F740 (54kW)	13-		R		**CF256**	Bch	Ø 17,46	Alu, 15/16Inch Wheels
	13-		R		**CF869**	Bch	Ø 19,05	Alu, 17Inch Wheels
1.2 TCe Eng.H5F403 (88kW)	13-		R		**CF256**	Bch	Ø 17,46	Alu, 15/16Inch Wheels
	13-		R		**CF869**	Bch	Ø 19,05	Alu, 17Inch Wheels
1.5 DCi Eng.K9K608 (66kW)	12-		R		**CF869**	Bch	Ø 19,05	Alu, 17Inch Wheels
1.5 DCi Eng.K9K612 (55kW)	12-		R		**CF256**	Bch	Ø 17,46	Alu, 15/16Inch Wheels
	12-		R		**CF869**	Bch	Ø 19,05	Alu, 17Inch Wheels
Espace I (J11) 7/84-12/90								
2.0 (J/S112) Eng.J6R234/ 236 (74-77-81kW)	84-90		R		**CF020**		Ø 22,00	
					PF007	Ate	Ø 20,64	Ch T0022234-
	84-				**PF122**		Ø 20,64	Ch -T0022233
2.0 (J/S112) Eng.J6R734 (74kW)	88-90		R		**CF020**	Bdx	Ø 22,00	
					PF007	Ate	Ø 20,64	Ch T0022234-
	88-				**PF122**		Ø 20,64	Ch -T0022233
2.0, 4WD (J116) Eng.J7R760	88-90		R		**CF020**		Ø 22,00	
(76-87-88-99-119-129kW)	88-90				**PF007**	Ate	Ø 20,64	-ABS, LHD
	88-90				**PF122**		Ø 20,64	-ABS, RHD
2.1 TD (J/S115) Eng.J8S774/ 240 (44-48-53-66kW)	84-90		R		**CF020**	Bdx	Ø 22,00	
	-90				**PF007**	Ate	Ø 20,64	Ch T0012278-
	84-				**PF122**		Ø 20,64	Ch -T0012277
2.2, 4WD (J117) Eng.J7T770	86-90		R		**CF020**	Bdx	Ø 22,00	
(67-70-74-76-79-85-89-91-101kW)	86-90				**PF007**	Ate	Ø 20,64	
Espace II (J/S63) 1/91-10/96								
2.0 (J636) Eng.J7R768 (76-88-99-119-129kW)	91-96		R		**CF089**	Luc	Ø 22,20	
	91-96				**PF170**	Ate	Ø 20,64	-ABS, -LCS
	91-96				**PF221**	Ate	Ø 22,20	-ABS, +LCS
2.1 TD (J633, J634, J/S635, J/S63D) Eng.J8S610/	5/92-96		R		**CF089**	Luc	Ø 22,20	
772/ 776/ 778 (44-48-53-66kW)	5/92-96				**PF170**	Ate	Ø 20,64	-ABS, -LCS
	5/92-96				**PF221**	Ate	Ø 22,20	-ABS
2.1 TD (J63E) Eng.J8S612 (44-48-53-66kW)	94-96		R		**CF089**	Luc	Ø 22,20	
	94-96				**PF221**	Ate	Ø 22,20	-ABS, +LCS
2.2, 4WD (J/S637, J63G) Eng.J7T772/ 773/ 776	5/92-96		R		**CF089**	Luc	Ø 22,20	
(79kW)	5/92-96				**PF170**	Ate	Ø 20,64	Only Mod. J/S637, -ABS, -LCS
	5/92-96				**PF221**	Ate	Ø 22,20	-ABS
2.8 V6 (J638, J63J) Eng.Z7W712/ 713/ 717 (110kW)	91-96				**PF191**	Bdx	Ø 23,81	
Espace III (JE) 11/96-11/02								
1.9 DTi (JE0M) Eng.F9Q722	99-		R		**CF089**	Luc	Ø 22,20	
(60-68-75-77-81-88-96kW)	99-				**PF285**	Ate	Ø 23,81	Alu, +ABS
	99-				**PF313**	Ate	Ø 23,81	-ABS

RENAULT

		Spare Parts	F/R	L/R	FRITECH ref.		DIMENSIONS mm.	NOTE
2.0 (JE0A) Eng.F3R728/ 729/ 742/ 768/ 769	96-00		R		**CF089**	Luc	Ø 22,20	
(80-84kW)	96-00				**PF285**	Ate	Ø 23,81	Alu, +ABS
	96-00				**PF313**	Ate	Ø 23,81	-ABS
2.0 16v (JE0L, JE0N) Eng.F4R700/ 701	98-		R		**CF089**	Luc	Ø 22,20	
(89-103-120-124kW)	98-				**PF285**	Ate	Ø 23,81	Alu, +ABS
	98-				**PF313**	Ate	Ø 23,81	-ABS
2.2 DCi (JE0K, JE0S) Eng.G9T710 (85-95kW)	00-		R		**CF089**	Luc	Ø 22,20	
	00-				**PF285**	Ate	Ø 23,81	Alu, +ABS
2.2 DT (JE0E, H, P) Eng.G8T714/ 716/ 740/ 760	96-00		R		**CF089**	Luc	Ø 22,20	
(83kW)	96-00				**PF285**	Ate	Ø 23,81	Alu, +ABS
	96-00				**PF512**	Ate	Ø 23,81	-ABS
3.0 (JE0D) Eng.Z7X775 (123kW)	96-98				**PF285**	Ate	Ø 23,81	Alu, +ABS
	96-98				**PF512**	Ate	Ø 23,81	-ABS
3.0 V6 24v (JE0G, JE0R) Eng.L7X727 (140kW)	98-				**PF285**	Ate	Ø 23,81	Alu, +ABS
	98-				**PF512**	Ate	Ø 23,81	-ABS
Espace IV (JK0) 11/02-3/15								
1.9 DCi (U,G) Eng.F9Q680/ 820/ 826	11/02-05				**PF639**		Ø 25,40	Alu, +ABS, -TC
(60-68-75-77-81-88-96kW)	11/02-				**PF640**		Ø 25,40	Alu, -ABS, +TC
2.0 (JK0KA6) Eng.F4R791 (100kW)	11/02-05				**PF639**		Ø 25,40	Alu, +ABS, -TC
	11/02-				**PF640**		Ø 25,40	Alu, -ABS, +TC
2.0 T. (BA6,BC6,BAB,BCB) Eng.F4R794/ 795/ 797	11/02-05				**PF639**		Ø 25,40	Alu, +ABS, -TC
(120kW)	11/02-				**PF640**		Ø 25,40	Alu, -ABS, +TC
2.2 DCi (HA6,HC6,HAB,HCB) Eng.G9T702/ 742/	11/02-05				**PF639**		Ø 25,40	Alu, +ABS, -TC
743 (110kW)	11/02-				**PF640**		Ø 25,40	Alu, -ABS, +TC
3.0 DCi (JAB,JCB) Eng.P9X701 (130kW)	11/02-05				**PF639**		Ø 25,40	Alu, +ABS, -TC
	11/02-				**PF640**		Ø 25,40	Alu, -ABS, +TC
3.5 V6 (FAB,FCB) Eng.V4Y711 (177kW)	11/02-05				**PF639**		Ø 25,40	Alu, +ABS, -TC
	11/02-				**PF640**		Ø 25,40	Alu, -ABS, +TC
Estafette 2/62-12/81								
1.1 Eng.68801 (29kW)	12/67-81		R		**CF120**	Bdx	Ø 22,00	
1.3 (1236/1237) Eng.81002 (29-31-32-33-37-40-44-47kW)	69-81		R		**CF120**	Bdx	Ø 22,00	
Fuego (136) 2/80-10/85								
1.4 (1360) Eng.847720 (35-43-46kW)	80-85		R	L	**CF016**	Bdx	Ø 22,00	
	80-85		R	L	**CF012**	Luc	Ø 22,22	
	80-		R	R	**CF017**	Bdx	Ø 22,00	Ch -6100
	80-85		R	R	**CF013**	Luc	Ø 22,22	
	80-85				**PF020**	Ate	Ø 19,05	Exc. Scandinavia
	80-85				**PF001**		Ø 19,05	Scandinavia
1.6 (1361) Eng.A2M723 (52kW)	83-85		R	L	**CF016**	Bdx	Ø 22,00	
	83-85		R	L	**CF012**	Luc	Ø 22,22	
	83-		R	R	**CF017**	Bdx	Ø 22,00	Ch -6000
	83-85		R	R	**CF013**	Luc	Ø 22,22	
	83-85				**PF020**	Ate	Ø 19,05	Exc. Scandinavia
	83-85				**PF001**		Ø 19,05	Scandinavia
	83-85				**PF295**		Ø 20,64	
1.6 (1362) Eng.843723/ 724/ A6M725/ 726	-85		R	L	**CF020**	Bdx	Ø 22,00	Ch 59301-
(66-68-71kW)	-85		R	R	**CF125**	Bdx	Ø 22,00	Ch 59301-
	2/80-		R		**CF020**	Bdx	Ø 22,00	Ch -59300
	80-85				**PF295**		Ø 20,64	
1.6 T. (1365) Eng.A5L750 (97kW)	83-85				**PF122**		Ø 20,64	
2.0 (1363) Eng.829710/ J6R710/ 712/ 715/ 726	80-85		R		**CF020**		Ø 22,00	
(81kW)	80-85				**PF122**		Ø 20,64	
2.1 TD (1366) Eng.J8S712 (44-48-53-66kW)	82-85		R		**CF020**		Ø 22,00	
	82-85				**PF122**		Ø 20,64	
2.2 (136A) (USA) Eng.J7T762 (67-70-74-76-79-85-89-91-101kW)	83-85				**PF122**		Ø 20,64	Switzerland/Usa
2.2 (136B) Eng.J7T762 (76kW)	83-85		R		**CF020**		Ø 22,00	
	83-85				**PF122**		Ø 20,64	
Grand Modus 6/08-8/13								
1.2 16v Eng.D4F740 (55kW)	08-		R		**CF780**	Loc	Ø 19,05	Alu, -ESP
	08-				**PF715**	Ate	Ø 23,81	Alu, +ABS, -ESP
	08-				**PF714**	Ate	Ø 23,81	Alu, -ABS

		Spare Parts	F/R	L/R	FRITECH ref.		DIMENSIONS mm.	NOTE
1.2 16v TCE Eng.D4F784 (74kW)	08-		R		**CF780**	Loc	Ø 19,05	Alu, -ESP
	08-				**PF908**	Ate	Ø 23,80	Alu, +ABS, +ESP
	08-				**PF715**	Ate	Ø 23,81	Alu, +ABS, -ESP
	08-				**PF714**	Ate	Ø 23,81	Alu, -ABS
1.2 16v TCE (76kW)	12-		R		**CF780**	Loc	Ø 19,05	Alu
	12-				**PF908**	Ate	Ø 23,80	Alu, +ABS, +ESP
1.5 DCi Eng.K9K750 (63kW)	08-		R		**CF780**	Loc	Ø 19,05	Alu, +ESP
	08-				**PF908**	Ate	Ø 23,80	Alu, +ABS, +ESP
	08-				**PF715**	Ate	Ø 23,81	Alu, +ABS, -ESP
	08-				**PF714**	Ate	Ø 23,81	Alu, -ABS
1.5 DCi Eng.K9K752 (50kW)	08-		R		**CF780**	Loc	Ø 19,05	Alu, +ESP
	08-				**PF908**	Ate	Ø 23,80	Alu, +ABS, +ESP
	08-				**PF715**	Ate	Ø 23,81	Alu, +ABS, -ESP
	08-				**PF714**	Ate	Ø 23,81	Alu, -ABS
1.5 DCi Eng.K9K764 (78kW)	08-		R		**CF780**	Loc	Ø 19,05	Alu, +ESP
	08-				**PF908**	Ate	Ø 23,80	Alu, +ABS, +ESP
	08-				**PF715**	Ate	Ø 23,81	Alu, +ABS, -ESP
	08-				**PF714**	Ate	Ø 23,81	Alu, -ABS
1.5 DCi Eng.K9K770 (55kW)	12-		R		**CF780**	Loc	Ø 19,05	Alu
	12-				**PF908**	Ate	Ø 23,80	Alu, +ABS, +ESP
	12-				**PF715**	Ate	Ø 23,81	Alu, +ABS, -ESP
	12-				**PF714**	Ate	Ø 23,81	Alu, -ABS, -ESP
1.5 DCi Eng.K9K772 (76kW)	08-		R		**CF780**	Loc	Ø 19,05	Alu, +ESP
	08-				**PF908**	Ate	Ø 23,80	Alu, +ABS, +ESP
	08-				**PF715**	Ate	Ø 23,81	Alu, +ABS, -ESP
	08-				**PF714**	Ate	Ø 23,81	Alu, -ABS
1.6 16v Eng.K4M790 (82kW)	08-		R		**CF780**	Loc	Ø 19,05	Alu, -ESP
	08-				**PF908**	Ate	Ø 23,80	Alu, +ABS, +ESP
	08-				**PF715**	Ate	Ø 23,81	Alu, +ABS, -ESP
	08-				**PF714**	Ate	Ø 23,81	Alu, -ABS
Grand Scenic I (JM) 4/04-10/08								
1.5 DCi Eng.K9K729 (74kW)	04-08				**PF987**	Bch	Ø 23,81	Alu
	04-				**PF585**	Trw	Ø 23,81	Alu
1.5 DCi Eng.K9K732 (78kW)	07-08				**PF987**	Bch	Ø 23,81	Alu
	07-08				**PF585**	Trw	Ø 23,81	Alu
1.6 16v Eng.K4M761/ 782 (83kW)	04-08				**PF987**	Bch	Ø 23,81	Alu
	04-				**PF585**	Trw	Ø 23,81	Alu
1.9 DCi Eng.F9Q804 (81kW)	05-				**PF585**	Trw	Ø 23,81	Alu
1.9 DCi Eng.F9Q804 (96kW)	05-08				**PF987**	Bch	Ø 23,81	Alu
	05-				**PF585**	Trw	Ø 23,81	Alu
1.9 DCi Eng.F9Q812 (60-68-75-77-81-88-96kW)	04-				**PF585**	Trw	Ø 23,81	Alu
2.0 Eng.F4R770/ 771 (99kW)	04-08				**PF987**	Bch	Ø 23,81	Alu
	04-				**PF585**	Trw	Ø 23,81	Alu
2.0 DCi Eng.M9R700 (110kW)	05-				**PF585**	Trw	Ø 23,81	Alu
2.0 T. Eng.F4R776 (120kW)	04-08				**PF987**	Bch	Ø 23,81	Alu
	04-				**PF585**	Trw	Ø 23,81	Alu
Grand Scenic II (JZ) 11/08-								
1.2 Tce Eng.H5F400 (85kW)	12-				**PF990**	Trw	Ø 23,81	Alu
1.4 16v Eng.H4J700 (96kW)	09-				**PF990**	Trw	Ø 23,81	Alu
1.5 DCi Eng.K9K830 (63kW)	09-				**PF990**	Trw	Ø 23,81	Alu
1.5 DCi Eng.K9K832 (78kW)	09-				**PF990**	Trw	Ø 23,81	Alu
1.5 DCi Eng.K9K836 (81kW)	08-				**PF990**	Trw	Ø 23,81	Alu
1.6 16v Bifuel Eng.K4M866 (81kW)	09-				**PF990**	Trw	Ø 23,81	Alu
1.6 DCi Eng.R9M402/ 404 (96kW)	11-				**PF990**	Trw	Ø 23,81	Alu
1.9 DCi Eng.F9Q870/ 872 (96kW)	08-				**PF990**	Trw	Ø 23,81	Alu
2.0 16v Eng.M4R711 (103kW)	09-				**PF990**	Trw	Ø 23,81	Alu
GTA 8/87-12/91								
All models	87-		R		**CF724**		Ø 20,64	
Kangoo I (KC0) 3/98-12/07								
1.2 (KC0A/K/F/1) Eng.D7F710/ 720/ 722/ 726/ 746	3/98-		R		**CF139**		Ø 22,00	Alu, +RC
(43kW)	3/98-		R		**CF138**		Ø 22,00	Alu, -RC
	01-				**PF582**		Ø 22,20	Alu, +ABS, LHD
	3/98-				**PF251**		Ø 22,20	Alu, +ABS, RHD
	3/98-				**PF252**		Ø 22,20	Alu, -ABS, LHD

RENAULT

		Spare Parts	F/R	L/R	FRITECH ref.		DIMENSIONS mm.	NOTE
1.2 16v (KC03/5/6/T/W) Eng.D4F712/ 714/ 716	6/01-		R		**CF139**		Ø 22,00	Alu, +RC
(55kW)	6/01-		R		**CF138**		Ø 22,00	Alu, -RC
	6/01-				**PF251**		Ø 22,20	Alu, +ABS, RHD
	6/01-				**PF582**		Ø 22,20	Alu, +ABS, LHD
	6/01-				**PF252**		Ø 22,20	Alu, -ABS, LHD
1.4 Eng.E7J634/ 635/ 780 (55kW)	3/98-		R		**CF139**		Ø 22,00	Alu, +RC
	3/98-		R		**CF138**		Ø 22,00	Alu, -RC
	01-				**PF582**		Ø 22,20	Alu, +ABS, LHD
	3/98-				**PF251**		Ø 22,20	Alu, +ABS, RHD
	3/98-				**PF252**		Ø 22,20	Alu, -ABS, LHD
1.4 (KC0C/H/B/M) Eng.K7J700/ 701 (55kW)	3/98-		R		**CF139**		Ø 22,00	Alu, +RC
	3/98-		R		**CF138**		Ø 22,00	Alu, -RC
	01-				**PF582**		Ø 22,20	Alu, +ABS, LHD
	3/98-				**PF251**		Ø 22,20	Alu, +ABS, RHD
	3/98-				**PF252**		Ø 22,20	Alu, -ABS, LHD
1.5 DCi Eng.K9K710 (42-45kW)	03-		R		**CF139**		Ø 22,00	Alu, +RC
	03-		R		**CF138**		Ø 22,00	Alu, -RC
	03-				**PF251**		Ø 22,20	Alu, +ABS, RHD
	03-				**PF582**		Ø 22,20	Alu, +ABS, LHD
	03-				**PF252**		Ø 22,20	Alu, -ABS, LHD
1.5 DCi Eng.K9K718 (62kW)	06-		R		**CF138**		Ø 22,00	Alu
	06-				**PF582**		Ø 22,20	Alu, +ABS
1.5 DCi Eng.K9K752 (50kW)	05-		R		**CF139**		Ø 22,00	Alu, +RC
	05-		R		**CF138**		Ø 22,00	Alu, -RC
	05-				**PF582**		Ø 22,20	Alu, +ABS, LHD
1.5 DCi (KC07) Eng.K9K700/ 704 (48kW)	6/01-		R		**CF139**		Ø 22,00	Alu, +RC
	6/01-		R		**CF138**		Ø 22,00	Alu, -RC
	6/01-				**PF251**		Ø 22,20	Alu, +ABS, RHD
	6/01-				**PF582**		Ø 22,20	Alu, +ABS, LHD
	6/01-				**PF252**		Ø 22,20	Alu, -ABS, LHD
1.5 DCi (KC08/9) Eng.K9K702/ 710/ 722 (60kW)	02-07		R		**CF139**		Ø 22,00	Alu, +RC
	02-07		R		**CF138**		Ø 22,00	Alu, -RC
	02-07				**PF251**		Ø 22,20	Alu, +ABS, RHD
	02-07				**PF582**		Ø 22,20	Alu, +ABS, LHD
	02-07				**PF252**		Ø 22,20	Alu, -ABS, LHD
1.6 16v bivalent Eng.K7M7 (60kW)	06-		R		**CF138**		Ø 22,00	Alu
	06-				**PF582**		Ø 22,20	Alu, +ABS
1.6 16v, 4WD (KC0P/S/L) Eng.K4M750/ 752/ 753	01-07		R		**CF139**		Ø 22,00	Alu, Exc. 4WD, +RC
(70kW)	01-07		R		**CF138**		Ø 22,00	Alu, Exc. 4WD, -RC
	01-07				**PF251**		Ø 22,20	Alu, +ABS, RHD
	01-07				**PF582**		Ø 22,20	Alu, +ABS, LHD
	01-07				**PF252**		Ø 22,20	Alu, -ABS, LHD
1.9 D (KC0D) Eng.F8Q662 (40kW)	3/98-		R		**CF139**		Ø 22,00	Alu, +RC
	3/98-		R		**CF138**		Ø 22,00	Alu, -RC
	3/98-				**PF251**		Ø 22,20	Alu, +ABS, RHD
	3/98-				**PF252**		Ø 22,20	Alu, -ABS, LHD
1.9 D (KC0E/2/J/N) Eng.F8Q630/ 632 (47kW)	3/98-		R		**CF139**		Ø 22,00	Alu, +RC
	3/98-		R		**CF138**		Ø 22,00	Alu, -RC
	3/98-				**PF251**		Ø 22,20	Alu, +ABS, RHD
	3/98-				**PF252**		Ø 22,20	Alu, -ABS, LHD
1.9 DCi 4WD Eng.F9Q790 (62kW)	03-				**PF582**		Ø 22,20	Alu, +ABS, LHD
1.9 DCi 4WD (KC0V) Eng.F9Q782/ 790 (59kW)	01-07				**PF582**		Ø 22,20	Alu, +ABS, LHD
1.9 DTi (KC0U) Eng.F9Q780 (59kW)	2/00-		R		**CF139**		Ø 22,00	Alu, +RC
	2/00-		R		**CF138**		Ø 22,00	Alu, -RC
	2/00-				**PF251**		Ø 22,20	Alu, +ABS, RHD
	2/00-				**PF582**		Ø 22,20	Alu, +ABS, LHD
	2/00-				**PF252**		Ø 22,20	Alu, -ABS, LHD
Kangoo II (KW0/1) 1/08-								
1.5 DCi Eng.K9K764 (78kW)	08-		R		**CF854**	Bch	Ø 22,00	Alu
1.5 DCi Eng.K9K800/ 802 (63kW)	08-		R		**CF854**	Bch	Ø 22,00	Alu
1.5 DCi Eng.K9K806 (76kW)	08-		R		**CF854**	Bch	Ø 22,00	Alu
1.5 DCi Eng.K9K808 (66kW)	09-		R		**CF854**	Bch	Ø 22,00	Alu
1.5 DCi Eng.K9K840 (50kW)	08-		R		**CF854**	Bch	Ø 22,00	Alu

		Spare Parts	F/R	L/R	FRITECH ref.		DIMENSIONS mm.	NOTE
1.6 Eng.K7M750 (64kW)	08-		R		**CF854**	Bch	Ø 22,00	Alu
1.6 16v Eng.K4M830 (78kW)	08-		R		**CF854**	Bch	Ø 22,00	Alu
Kangoo II Be Bop 2/09-								
1.5 DCi Eng.K9K806 (76kW)	09-		R		**CF854**	Bch	Ø 22,00	Alu
1.6 16v Eng.K4M830 (78kW)	09-		R		**CF854**	Bch	Ø 22,00	Alu
Koleos 7/08-12/15								
2.0 DCi Eng.M9R830 (127-130kW)	08-				**PF926**	Bch	Ø 23,81	Alu
2.0 DCi Eng.M9R832/ 833 (110kW)	08-				**PF926**	Bch	Ø 23,81	Alu
2.0 DCi, 4WD Eng.M9R832 (100kW)	11-				**PF925**	Bch	Ø 23,81	Alu
2.5, 4WD Eng.2TR700/ 703 (126kW)	08-				**PF926**	Bch	Ø 23,81	Alu
Laguna I (B56, 556) 11/93-3/01								
1.6 16v (B568, B561) Eng.K4M720/ 724 (79kW)	97-01		R		**CF159**	Luc	Ø 20,64	
	2/99-01				**PF191**	Bdx	Ø 23,81	+ABS
	97-1/99				**PF192**		Ø 23,81	+ABS
1.8 (B560/S/T) Eng.F3P670/ 678 (66kW)	5/98-01		R		**CF159**	Luc	Ø 20,64	
	95-4/98		R		**CF140**		Ø 19,05	
	95-01				**PF401**	Ate	Ø 22,20	-ABS
	2/99-01				**PF191**	Bdx	Ø 23,81	+ABS
	2/97-1/99				**PF192**		Ø 23,81	+ABS
	95-1/97				**PF286**		Ø 23,81	+ABS
1.8 (B56A/B/Z) Eng.F3P720/ 724 (66-69-70kW)	93-01		R		**CF140**		Ø 19,05	
	93-01				**PF401**	Ate	Ø 22,20	-ABS
	2/99-01				**PF191**	Bdx	Ø 23,81	+ABS
	2/97-1/99				**PF192**		Ø 23,81	+ABS
	95-1/97				**PF286**		Ø 23,81	+ABS
1.8 16v (B563, B564) Eng.F4P760 (88kW)	4/98-01		R		**CF159**	Luc	Ø 20,64	
	2/99-01				**PF191**	Bdx	Ø 23,81	+ABS
	4/98-1/99				**PF192**		Ø 23,81	+ABS
1.9 DCi (B56W) Eng.F9Q718 (79kW)	9/99-01				**PF191**	Bdx	Ø 23,81	+ABS
1.9 DTi (B56J) Eng.F9Q710/ 716 (72kW)	97-01		R		**CF159**	Luc	Ø 20,64	
	2/99-01				**PF191**	Bdx	Ø 23,81	+ABS
	10/97-1/99				**PF192**		Ø 23,81	+ABS
2.0 (B56C/H/L/N) Eng.F3R611/ 722/ 723/ 768	3/99-01		R		**CF159**	Luc	Ø 20,64	
(70-80-83kW)	93-2/99		R		**CF140**		Ø 19,05	
	93-01				**PF401**	Ate	Ø 22,20	-ABS
	2/99-01				**PF191**	Bdx	Ø 23,81	+ABS
	2/97-1/99				**PF192**		Ø 23,81	+ABS
	93-1/97				**PF286**		Ø 23,81	+ABS
2.0 16v (556A/B) Eng.F4R780 (103kW)	99-01				**PF191**	Bdx	Ø 23,81	+ABS
2.0 16v (B56 D/M) Eng.N7Q700/ 704 (102-103kW)	2/99-01				**PF191**	Bdx	Ø 23,81	+ABS
	2/97-01				**PF192**		Ø 23,81	+ABS
	95-1/97				**PF286**		Ø 23,81	+ABS
2.2 D Eng.G8T752/ 794 (61kW)	96-01		R		**CF140**		Ø 19,05	
	96-01				**PF401**	Ate	Ø 22,20	-ABS
	96-01				**PF192**		Ø 23,81	+ABS
2.2 D (B56F/2) Eng.G8T706/ 790 (61kW)	93-01		R		**CF140**		Ø 19,05	
	93-01				**PF401**	Ate	Ø 22,20	-ABS
	11/93-1/97				**PF286**		Ø 23,81	+ABS
	2/97-01				**PF192**		Ø 23,81	+ABS
2.2 DT (B569) Eng.G8T714/ 716/ 740/ 760 (83kW)	2/97-01				**PF192**		Ø 23,81	+ABS
	96-1/97				**PF286**		Ø 23,81	+ABS
3.0 (B56E/R, B565) Eng.Z7X760/ 765 (123kW)	2/99-01				**PF191**	Bdx	Ø 23,81	+ABS
	11/93-1/97				**PF286**		Ø 23,81	+ABS
	2/97-1/99				**PF192**		Ø 23,81	+ABS
3.0 24v (B56V) Eng.L7X700/ 701 (140kW)	2/99-01				**PF191**	Bdx	Ø 23,81	+ABS
	2/97-1/99				**PF192**		Ø 23,81	+ABS
Laguna I (K56) SW 9/95-3/01								
1.6 16v (K568) Eng.K4M720/ 724 (79kW)	97-01		R		**CF316**		Ø 22,20	
	2/99-01				**PF191**	Bdx	Ø 23,81	
	97-01				**PF192**		Ø 23,81	-ABS
1.8 (K56S/T/0) Eng.F3P670/ 678 (66kW)	6/95-98		R		**CF159**	Luc	Ø 20,64	
	5/98-01		R		**CF316**		Ø 22,20	
	95-01				**PF401**	Ate	Ø 22,20	-ABS
	2/99-01				**PF191**	Bdx	Ø 23,81	+ABS

RENAULT

		Spare Parts	F/R	L/R	FRITECH ref.		DIMENSIONS mm.	NOTE
1.8 (K56S/T/0) Eng.F3P670/ 678 (66kW)	2/97-01				**PF192**		Ø 23,81	-ABS
1.8 (K56Z) Eng.F3P720/ 724 (66-69kW)	95-01		R		**CF159**	Luc	Ø 20,64	
	6/95-1/97				**PF286**		Ø 23,81	+ABS
	95-01				**PF192**		Ø 23,81	-ABS
1.8 16v (K563, K564) Eng.F4P760 (88kW)	98-01		R		**CF316**		Ø 22,20	
	2/99-01				**PF191**	Bdx	Ø 23,81	+ABS
	11/97-1/99				**PF192**		Ø 23,81	-ABS
1.9 DCi (K56W) Eng.F9Q718 (79kW)	9/99-01				**PF191**	Bdx	Ø 23,81	+ABS
1.9 DTi (K56J) Eng.F9Q710/ 716 (72kW)	97-01		R		**CF316**		Ø 22,20	
	2/99-01				**PF191**	Bdx	Ø 23,81	+ABS
	10/97-1/99				**PF192**		Ø 23,81	-ABS
2.0 (K56C/H) Eng.F3R722/ 723/ 768 (80-84kW)	95-98		R		**CF159**	Luc	Ø 20,64	
	5/98-01		R		**CF316**		Ø 22,20	
	2/99-01				**PF191**	Bdx	Ø 23,81	+ABS
	9/95-1/97				**PF286**		Ø 23,81	+ABS
	6/95-01				**PF192**		Ø 23,81	-ABS
2.0 16v (A56A/B) Eng.F4R780 (103kW)	99-01				**PF191**	Bdx	Ø 23,81	+ABS
2.0 16v (K56 D/M) Eng.N7Q700/ 704 (102kW)	2/99-01				**PF191**	Bdx	Ø 23,81	+ABS
	9/95-1/97				**PF286**		Ø 23,81	+ABS
	2/97-1/99				**PF192**		Ø 23,81	-ABS
2.2 D Eng.G8T752/ 794 (61kW)	96-01		R		**CF159**	Luc	Ø 20,64	
	96-01				**PF192**		Ø 23,81	-ABS
2.2 D (K56F/2, S56F) Eng.G8T706/ 790 (61kW)	95-01		R		**CF159**	Luc	Ø 20,64	
	6/95-1/97				**PF286**		Ø 23,81	+ABS
	95-01				**PF192**		Ø 23,81	-ABS
2.2 DT (K569) Eng.G8T714/ 716/ 740/ 760 (83kW)	2/99-01				**PF191**	Bdx	Ø 23,81	+ABS
	96-1/97				**PF286**		Ø 23,81	+ABS
	2/97-1/99				**PF192**		Ø 23,81	-ABS
3.0 (K56R, K565) Eng.Z7X760/ 765 (123kW)	2/99-01				**PF191**	Bdx	Ø 23,81	+ABS
	2/96-1/97				**PF286**		Ø 23,81	+ABS
	2/97-01				**PF192**		Ø 23,81	-ABS
3.0 24v (K56V) Eng.L7X700/ 701 (140kW)	2/99-01				**PF191**	Bdx	Ø 23,81	+ABS
	2/96-1/97				**PF286**		Ø 23,81	+ABS
	2/97-01				**PF192**		Ø 23,81	-ABS
Laguna II (B74) 3/01-10/07								
1.6 16v (BG0A/L) Eng.K4M710/ 711 (70-79kW)	3/01-4/04				**PF641**		Ø 23,81	Alu
1.8 16v (BG0J) Eng.F4P770/ 771/ 773/ 774/ 775 (85-88-89kW)	3/01-4/04				**PF641**		Ø 23,81	Alu
1.9 DCi Eng.F9Q664 (68kW)	3/04-4/04				**PF641**		Ø 23,81	Alu
1.9 DCi (BG0E) Eng.F9Q752 (77kW)	3/01-4/04				**PF641**		Ø 23,81	Alu
1.9 DCi (BG0G) Eng.F9Q670/ 750/ 756 (88kW)	3/01-4/04				**PF641**		Ø 23,81	Alu
1.9 DCi (BG0R) Eng.F9Q752, F9Q754 (74kW)	3/01-4/04				**PF641**		Ø 23,81	Alu
2.0 16v Eng.F4R712/ 713/ 714/ 715 (98-99kW)	02-07				**PF641**		Ø 23,81	Alu
2.0 16v IDE (BG0N/P) Eng.F5R700 (103kW)	01-4/04				**PF641**		Ø 23,81	Alu
2.2 DCi (BG0F) Eng.G9T702/ 742/ 743 (110kW)	10/01-4/04				**PF641**		Ø 23,81	Alu
3.0 V6 24v (BG0D) Eng.L7X731 (152kW)	3/01-4/04				**PF641**		Ø 23,81	Alu
Laguna II (K74) SW 3/01-10/07								
1.6 16v (KG0A/L) Eng.K4M710/ 711 (70-79-83kW)	3/01-				**PF641**		Ø 23,81	Alu
1.8 16v (KG0J) Eng.F4P770/ 771/ 773/ 774/ 775 (85-88kW)	01-07				**PF641**		Ø 23,81	Alu
1.9 DCi Eng.F9Q664 (68kW)	04-				**PF641**		Ø 23,81	Alu
1.9 DCi (KG0E) Eng.F9Q752 (77kW)	3/01-				**PF641**		Ø 23,81	Alu
1.9 DCi (KG0G) Eng.F9Q670/ 750/ 756 (88kW)	3/01-				**PF641**		Ø 23,81	Alu
1.9 DCi (KG0R) Eng.F9Q754 (74kW)	3/01-				**PF641**		Ø 23,81	Alu
2.0 16v Eng.F4R712/ 713/ 714/ 715 (99kW)	02-07				**PF641**		Ø 23,81	Alu
2.0 16v IDE (KG0N/P) Eng.F5R700 (103kW)	01-07				**PF641**		Ø 23,81	Alu
2.2 DCi (KG0F) Eng.G9T702 (110kW)	10/01-				**PF641**		Ø 23,81	Alu
3.0 V6 24v (KG0D) Eng.L7X731 (152kW)	3/01-				**PF641**		Ø 23,81	Alu
Laguna III, SW, Coupe 11/07-12/15								
1.5 DCi Eng.K9K780/ 782/ 846 (81kW)	07-				**PF987**	Bch	Ø 23,81	Alu
1.6 16v 6Speed Eng.K4M824 (81kW)	07-				**PF987**	Bch	Ø 23,81	Alu
2.0 16v Eng.M4R704 (103kW)	07-				**PF987**	Bch	Ø 23,81	Alu
2.0 DCi Eng.M9R742/ 746/ 802 (96kW)	07-				**PF987**	Bch	Ø 23,81	Alu

		Spare Parts	F/R	L/R	FRITECH ref.		DIMENSIONS mm.	NOTE
2.0 DCi Eng.M9R800 (127kW)	07-				**PF987**	Bch	Ø 23,81	Alu
2.0 DCi Eng.M9R802/ 805/ 809 (110kW)	07-				**PF987**	Bch	Ø 23,81	Alu
2.0 DCi Eng.M9R816 (131kW)	08-				**PF987**	Bch	Ø 23,81	Alu
2.0 T. Eng.F4R800 (150kW)	08-				**PF987**	Bch	Ø 23,81	Alu
2.0 T. Eng.F4R811 (125kW)	07-				**PF987**	Bch	Ø 23,81	Alu
3.0 DCi Eng.V9XA791/ 891 (173kW)	08-				**PF987**	Bch	Ø 23,81	Alu
3.5 V6 Eng.V4Y713 (175kW)	08-				**PF987**	Bch	Ø 23,81	Alu
Logan I (LS, KS), SW 9/04-9/13								
1.4 Eng.K7J710 (55kW)	04-		R		**CF854**	Bch	Ø 22,00	Alu, SW, +ABS
	04-		R		**CF870**	Bch	Ø 17,46	Alu, -ABS
	04-		R		**CF144**	Bch	Ø 19,05	-ABS
	04-		R		**CF161**	Luc	Ø 17,78	+ABS
	04-				**PF617**		Ø 20,64	Alu, Exc. MCV/SW, +ABS
	04-				**PF710**		Ø 20,64	Alu, Exc. MCV/SW, -ABS
	08-				**PF899**		Ø 22,20	Alu, SW/MCV
1.5 DCi Eng.K9K792 (50kW)	07-		R		**CF144**	Bch	Ø 19,05	-ABS
	07-		R		**CF854**	Bch	Ø 22,00	Alu, SW
	07-		R		**CF161**	Luc	Ø 17,78	+ABS
	07-				**PF617**		Ø 20,64	Alu, Exc. MCV/SW, +ABS
	07-				**PF710**		Ø 20,64	Alu, Exc. MCV/SW, -ABS
	07-				**PF899**		Ø 22,20	Alu, SW/MCV
1.5 DCi Eng.K9K796 (63kW)	08-		R		**CF144**	Bch	Ø 19,05	-ABS
	08-		R		**CF854**	Bch	Ø 22,00	Alu, SW
	08-		R		**CF161**	Luc	Ø 17,78	+ABS
	08-				**PF617**		Ø 20,64	Alu, Exc. MCV/SW, +ABS
	08-				**PF710**		Ø 20,64	Alu, Exc. MCV/SW, -ABS
	08-				**PF899**		Ø 22,20	Alu, SW/MCV
1.6 Eng.K4M690/697 (82kW)	07-		R		**CF144**	Bch	Ø 19,05	-ABS
	07-		R		**CF854**	Bch	Ø 22,00	Alu, SW
	07-		R		**CF161**	Luc	Ø 17,78	+ABS
	07-				**PF617**		Ø 20,64	Alu, Exc. MCV/SW, +ABS
	07-				**PF710**		Ø 20,64	Alu, Exc. MCV/SW, -ABS
	07-				**PF899**		Ø 22,20	Alu, SW/MCV
1.6 Eng.K4M706 (80kW)	07-		R		**CF144**	Bch	Ø 19,05	-ABS
	07-		R		**CF854**	Bch	Ø 22,00	Alu, SW
	07-		R		**CF161**	Luc	Ø 17,78	+ABS
	07-				**PF617**		Ø 20,64	Alu, Exc. MCV/SW, +ABS
	07-				**PF710**		Ø 20,64	Alu, Exc. MCV/SW, -ABS
	07-				**PF899**		Ø 22,20	Alu, SW/MCV
1.6 Eng.K7M690 (77kW)	07-		R		**CF144**	Bch	Ø 19,05	-ABS
	07-		R		**CF854**	Bch	Ø 22,00	Alu, SW
	07-		R		**CF161**	Luc	Ø 17,78	+ABS
	07-				**PF617**		Ø 20,64	Alu, Exc. MCV/SW, +ABS
	07-				**PF710**		Ø 20,64	Alu, Exc. MCV/SW, -ABS
	07-				**PF899**		Ø 22,20	Alu, SW/MCV
1.6 Eng.K7M710 (64kW)	04-		R		**CF854**	Bch	Ø 22,00	Alu, SW, +ABS
	04-		R		**CF869**	Bch	Ø 19,05	Alu, SW, -ABS
	9/04-		R		**CF144**	Bch	Ø 19,05	-ABS
	04-		R		**CF161**	Luc	Ø 17,78	+ABS
	04-				**PF617**		Ø 20,64	Alu, Exc. MCV/SW, +ABS
	04-				**PF710**		Ø 20,64	Alu, Exc. MCV/SW, -ABS
	08-				**PF899**		Ø 22,20	Alu, SW/MCV
Medallion 1/88-1/89								
All models	88-89		R	L	**CF021**	Luc	Ø 22,20	
	88-89		R	R	**CF022**	Luc	Ø 22,20	
Megane I (BA) 1/96-11/02								
1.4 16v (BA0D/W,1H/0) Eng.K4J714/ 750 (70kW)	99-02		R		**CF682**	Bdx	Ø 19,05	+ABS
	99-02		R		**CF131**		Ø 17,46	-ABS
	99-02				**PF291**	Ate	Ø 20,64	Alu, +ABS, RHD
	99-02				**PF257**	Ate	Ø 22,20	Alu, +ABS, LHD
	99-02				**PF290**	Ate	Ø 22,20	Alu, -ABS
1.4 e (BA0E/V) Eng.E7J626/ 764 (55kW)	6/98-12/02		R		**CF682**	Bdx	Ø 19,05	+ABS
	1/96-02		R		**CF131**		Ø 17,46	-ABS
	6/98-2/99				**PF291**	Ate	Ø 20,64	Alu, Mod. V, +ABS, LHD

RENAULT

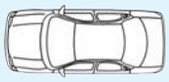		Spare Parts	F/R	L/R	FRITECH ref.		DIMENSIONS mm.	NOTE
1.4 e (BA0E/V) Eng.E7J626/ 764 (55kW)	3/99-12/02				**PF257**	Ate	Ø 22,20	Alu, Mod. V, +ABS, LHD
	1/96-2/99				**PF007**	Ate	Ø 20,64	-ABS
	3/99-12/02				**PF290**	Ate	Ø 22,20	Alu, -ABS
	1/96-12/02				**PF131**	Bdx	Ø 20,64	+ABS, RHD
	1/96-12/02				**PF211**	Bdx	Ø 20,64	Mod. E, +ABS, LHD
1.4 Eco (BA0T) Eng.E7J624 (52kW)	96-99		R		**CF131**		Ø 17,46	
	96-99				**PF007**	Ate	Ø 20,64	-ABS
	96-99				**PF211**	Bdx	Ø 20,64	+ABS
1.6 16v (BA11/04/0B/1J) Eng.K4M700/ 701/ 704/	99-02		R		**CF682**	Bdx	Ø 19,05	+ABS
708 (64-70-79-83kW)	99-02		R		**CF131**		Ø 17,46	-ABS
	99-02				**PF257**	Ate	Ø 22,20	Alu, +ABS, IP
	99-02				**PF311**	Ate	Ø 23,81	+ABS, LHD
	99-02				**PF290**	Ate	Ø 22,20	Alu, -ABS
1.6 e (BA0F/S) Eng.K7M702/ 703/ 790 (66kW)	96-99		R		**CF131**		Ø 17,46	
	96-99				**PF007**	Ate	Ø 20,64	-ABS
	96-99				**PF131**	Bdx	Ø 20,64	+ABS, RHD
	96-99				**PF211**	Bdx	Ø 20,64	+ABS, LHD
1.6 i (BA0L) Eng.K7M720 (55-66kW)	96-99		R		**CF131**		Ø 17,46	
	96-99				**PF007**	Ate	Ø 20,64	-ABS
	96-99				**PF211**	Bdx	Ø 20,64	+ABS
1.8 16v (BA06, BA12/A/M/R) Eng.F4P720/ 722	1/01-02		R		**CF682**	Bdx	Ø 19,05	+ABS
(85-88kW)	01-02				**PF311**	Ate	Ø 23,81	+ABS
1.9 D (B/SA0U/A) Eng.F8Q620/ 624 (47kW)	96-02		R		**CF682**	Bdx	Ø 19,05	+ABS
	96-02		R		**CF131**		Ø 17,46	-ABS
	96-02				**PF291**	Ate	Ø 20,64	Alu, Mod. A/U/S/9, +ABS, RHD
	98-02				**PF257**	Ate	Ø 22,20	Alu, Mod. R, +ABS
	96-02				**PF008**	Ate	Ø 19,00	Driving School, -ABS
	96-02				**PF007**	Ate	Ø 20,64	Exc. Driving School, -ABS
	98-02				**PF290**	Ate	Ø 22,20	Alu, Mod. R, -ABS
	1/96-9/98				**PF597**	Bch	Ø 19,05	+ABS, RHD
	96-02				**PF131**	Bdx	Ø 20,64	Mod. A/U/9, +ABS, RHD
	96-02				**PF211**	Bdx	Ø 20,64	Mod. A/U/S/9, +ABS, LHD
1.9 DCi (BA05, BA1F) Eng.F9Q732/ 733 (75kW)	01-02		R		**CF682**	Bdx	Ø 19,05	+ABS, +TC
	01-02		R		**CF131**		Ø 17,46	-ABS
	01-02				**PF311**	Ate	Ø 23,81	+ABS
	01-02				**PF290**	Ate	Ø 22,20	Alu, -ABS
1.9 DT (B/SA0K/Y) Eng.F8Q784/ 786 (66kW)	96-02		R		**CF131**		Ø 17,46	
	96-02				**PF291**	Ate	Ø 20,64	Alu, +ABS, LHD
	99-02				**PF257**	Ate	Ø 22,20	Alu, Mod. BY, +ABS, LHD
	96-02				**PF007**	Ate	Ø 20,64	-ABS
	96-02				**PF290**	Ate	Ø 22,20	Alu, -ABS
	1/96-1/98				**PF211**	Bdx	Ø 20,64	+ABS, LHD
	96-02				**PF131**	Bdx	Ø 20,64	+ABS, RHD
1.9 DTi (BA08/N) Eng.F9Q730/ 731/ 732/ 733/ 734/	3/99-02		R		**CF682**	Bdx	Ø 19,05	+ABS
736 (72kW)	97-2/99		R		**CF131**		Ø 17,46	
	97-02				**PF257**	Ate	Ø 22,20	Alu, Mod. BN, +ABS, LHD
	3/99-02				**PF311**	Ate	Ø 23,81	+ABS, LHD
	97-02				**PF007**	Ate	Ø 20,64	-ABS
	97-02				**PF290**	Ate	Ø 22,20	Alu, Mod. BN, -ABS
	97-02				**PF131**	Bdx	Ø 20,64	+ABS, RHD
	97-2/99				**PF211**	Bdx	Ø 20,64	+ABS, LHD
1.9 DTi (BA1U) Eng.F9Q744 (59kW)	01-		R		**CF131**		Ø 17,46	
	01-				**PF311**	Ate	Ø 23,81	+ABS
1.9 TDi Eng.F8Q784 (69kW)	3/99-02		R		**CF682**	Bdx	Ø 19,05	+ABS
	1/96-2/99		R		**CF131**		Ø 17,46	
	96-02				**PF007**	Ate	Ø 20,64	-ABS
	96-02				**PF131**	Bdx	Ø 20,64	+ABS, RHD
	96-2/99				**PF211**	Bdx	Ø 20,64	+ABS, LHD
2.0 (BA0G) Eng.F3R750/ 751 (80-83-84-85kW)	96-02		R		**CF131**		Ø 17,46	
	3/99-				**PF257**	Ate	Ø 22,20	Alu, +ABS
	96-02				**PF007**	Ate	Ø 20,64	-ABS
	96-02				**PF131**	Bdx	Ø 20,64	+ABS, RHD
	96-02				**PF211**	Bdx	Ø 20,64	+ABS, LHD

		Spare Parts	F/R	L/R	FRITECH ref.		DIMENSIONS mm.	NOTE
2.0 16v (BA0H) Eng.F7R710/ 714 (108kW)	96-02				**PF191**	Bdx	Ø 23,81	
Megane I (DA) Coach 3/96-11/02								
1.4 16v (DA0D/W, DA1H/0) Eng.K4J714/ 750	99-02		R		**CF682**	Bdx	Ø 19,05	+ABS
(70kW)	99-02		R		**CF131**		Ø 17,46	-ABS
	99-02				**PF291**	Ate	Ø 20,64	Alu, +ABS, RHD
	99-02				**PF257**	Ate	Ø 22,20	Alu, Mod. 0W, +ABS, LHD
	99-02				**PF311**	Ate	Ø 23,81	Mod. 0D, +ABS, LHD
	99-02				**PF290**	Ate	Ø 22,20	Alu, -ABS
1.6 16v (DA0B/4, DA11) Eng.K4M700/ 701/ 708	99-02		R		**CF682**	Bdx	Ø 19,05	+ABS
(79kW)	99-02		R		**CF131**		Ø 17,46	-ABS
	99-02				**PF311**	Ate	Ø 23,81	+ABS
	99-02				**PF290**	Ate	Ø 22,20	Alu, -ABS
1.6 e (DA0F) Eng.K7M702/ 703 (66kW)	96-99		R		**CF131**		Ø 17,46	
	96-99				**PF291**	Ate	Ø 20,64	Alu, +ABS
	96-99				**PF007**	Ate	Ø 20,64	-ABS
	96-99				**PF211**	Bdx	Ø 20,64	+ABS, LHD
1.9 DCi (DA05, DA1F) Eng.F9Q732/ 733 (75-77kW)	01-02		R		**CF682**	Bdx	Ø 19,05	+ABS
	01-02		R		**CF131**		Ø 17,46	-ABS
	01-02				**PF311**	Ate	Ø 23,81	+ABS
	01-02				**PF290**	Ate	Ø 22,20	Alu, -ABS
1.9 DTi (DA0N) Eng.F9Q730/ 731/ 732/ 733/ 734/	97-02		R		**CF682**	Bdx	Ø 19,05	+ABS
736 (72kW)	97-02		R		**CF131**		Ø 17,46	-ABS
	97-2/99				**PF291**	Ate	Ø 20,64	Alu, +ABS
	3/99-02				**PF311**	Ate	Ø 23,81	+ABS
	97-02				**PF007**	Ate	Ø 20,64	-ABS
	97-2/99				**PF211**	Bdx	Ø 20,64	+ABS
2.0 (DA0G) Eng.F3R750/ 751 (80-84kW)	96-02		R		**CF131**		Ø 17,46	
	96-02				**PF291**	Ate	Ø 20,64	Alu, +ABS, RHD
	96-02				**PF311**	Ate	Ø 23,81	+ABS, LHD
	96-02				**PF007**	Ate	Ø 20,64	-ABS
	96-02				**PF211**	Bdx	Ø 20,64	+ABS, LHD
2.0 16v Eng.F4R740/ 741/ 746 (102kW)	1/02-11/02				**PF311**	Ate	Ø 23,81	+ABS
	1/02-11/02				**PF290**	Ate	Ø 22,20	Alu, -ABS
2.0 16v (DA0H) Eng.F7R710/ 714 (108kW)	96-99				**PF191**	Bdx	Ø 23,81	LHD
2.0 16v IDE (DA03/P, DA14) Eng.F5R740 (103kW)	99-02				**PF311**	Ate	Ø 23,81	+ABS
	99-02				**PF290**	Ate	Ø 22,20	Alu, -ABS
Megane I (EA0) Cabrio 10/96-11/02								
1.4 16v (EA0D/W,1H/0) Eng.K4J714/ 750 (70kW)	99-02		R		**CF682**	Bdx	Ø 19,05	+ABS
	99-02		R		**CF131**		Ø 17,46	-ABS
	99-02				**PF257**	Ate	Ø 22,20	Alu, Mod. W, +ABS, LHD
	99-02				**PF311**	Ate	Ø 23,81	Mod. D, +ABS, LHD
	99-02				**PF290**	Ate	Ø 22,20	Alu, -ABS
1.6 16v (EA0B/4, EA11) Eng.K4M700/ 701/ 708	99-02		R		**CF682**	Bdx	Ø 19,05	+ABS
(79kW)	99-02		R		**CF131**		Ø 17,46	-ABS
	99-02				**PF311**	Ate	Ø 23,81	+ABS
	99-02				**PF290**	Ate	Ø 22,20	Alu, -ABS
1.6 e (EA0F) Eng.K7M702/ 703 (66kW)	96-99		R		**CF131**		Ø 17,46	
	96-99				**PF291**	Ate	Ø 20,64	Alu, +ABS, LHD
	96-99				**PF007**	Ate	Ø 20,64	-ABS
	96-99				**PF131**	Bdx	Ø 20,64	+ABS, RHD
	96-99				**PF211**	Bdx	Ø 20,64	+ABS, LHD
2.0 (EA0G) Eng.F3R750/ 751 (84kW)	97-02		R		**CF131**		Ø 17,46	
	97-02				**PF291**	Ate	Ø 20,64	Alu, +ABS
	3/99-02				**PF311**	Ate	Ø 23,81	+ABS
	97-02				**PF007**	Ate	Ø 20,64	-ABS
	97-02				**PF211**	Bdx	Ø 20,64	+ABS, LHD
2.0 (EA0G) Eng.F3R791/ 796 (80kW)	99-02		R		**CF131**		Ø 17,46	
	99-02				**PF291**	Ate	Ø 20,64	Alu, +ABS
	99-02				**PF311**	Ate	Ø 23,81	+ABS
	99-02				**PF007**	Ate	Ø 20,64	-ABS
	99-02				**PF211**	Bdx	Ø 20,64	+ABS, LHD
2.0 16v Eng.F4R740/ 741/ 746 (102kW)	1/02-11/02				**PF311**	Ate	Ø 23,81	+ABS
	1/02-11/02				**PF290**	Ate	Ø 22,20	Alu, -ABS

RENAULT

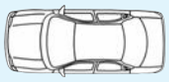		Spare Parts	F/R	L/R	FRITECH ref.		DIMENSIONS mm.	NOTE
2.0 16v (EA0H) Eng.F7R710/ 714 (108kW)	96-99				**PF191**	Bdx	Ø 23,81	LHD
2.0 16v IDE (EA03/P, EA14) Eng.F5R740 (103kW)	99-02				**PF311**	Ate	Ø 23,81	+ABS
	99-02				**PF290**	Ate	Ø 22,20	Alu, -ABS
Megane I (JA0) Scenic 1/97-9/99								
1.4 (JA0E) Eng.E7J764 (52-55kW)	97-99		R		**CF159**	Luc	Ø 20,64	
	10/98-99				**PF311**	Ate	Ø 23,81	+ABS
	97-98				**PF007**	Ate	Ø 20,64	-ABS
	10/98-99				**PF312**	Ate	Ø 23,81	-ABS
	97-99				**PF211**	Bdx	Ø 20,64	+ABS
1.6 16v Eng.K4M700/ 708 (79kW)	97-99		R		**CF159**	Luc	Ø 20,64	
	97-99				**PF211**	Bdx	Ø 20,64	
1.6 e (JA0F) Eng.K7M702/ 703 (66kW)	97-99		R		**CF159**	Luc	Ø 20,64	
	10/98-99				**PF311**	Ate	Ø 23,81	+ABS
	97-99				**PF007**	Ate	Ø 20,64	-ABS, M/T
	10/98-99				**PF312**	Ate	Ø 23,81	-ABS
	97-99				**PF131**	Bdx	Ø 20,64	+ABS, M/T, RHD
	97-99				**PF211**	Bdx	Ø 20,64	+ABS, M/T, LHD
	97-9/98				**PF287**		Ø 22,20	-ABS, A/T
1.6 i (JA0L) Eng.K7M720 (55kW)	97-99		R		**CF159**	Luc	Ø 20,64	
	98-99				**PF311**	Ate	Ø 23,81	+ABS
	97-99				**PF007**	Ate	Ø 20,64	-ABS
	98-99				**PF312**	Ate	Ø 23,81	-ABS
	97-99				**PF211**	Bdx	Ø 20,64	+ABS
1.9 D Eng.F8Q788/ 790 (47kW)	97-98		R		**CF159**	Luc	Ø 20,64	
	3/99-9/99				**PF257**	Ate	Ø 22,20	Alu, +ABS
	10/98-9/99				**PF311**	Ate	Ø 23,81	+ABS
	10/98-9/99				**PF312**	Ate	Ø 23,81	-ABS
	11/96-9/98				**PF287**		Ø 22,20	-ABS
1.9 DT (JA0K/Y) Eng.F8Q784/ 786 (66-69kW)	97-99		R		**CF159**	Luc	Ø 20,64	
	10/98-9/99				**PF311**	Ate	Ø 23,81	+ABS
	10/98-9/99				**PF312**	Ate	Ø 23,81	-ABS
	1/97-9/98				**PF287**		Ø 22,20	
1.9 DTi (JA0N) Eng.F9Q730/ 734 (72kW)	97-99		R		**CF159**	Luc	Ø 20,64	
	10/98-9/99				**PF311**	Ate	Ø 23,81	+ABS
	10/98-9/99				**PF312**	Ate	Ø 23,81	-ABS
	97-9/98				**PF287**		Ø 22,20	
2.0 (JA0G) Eng.F3R796 (80kW)	1/99-9/99		R		**CF159**	Luc	Ø 20,64	
	1/99-9/99				**PF311**	Ate	Ø 23,81	+ABS
	1/99-9/99				**PF312**	Ate	Ø 23,81	-ABS
2.0 (JA0G), 4x4 Eng.F3R750/ 751 (84kW)	97-99		R		**CF159**	Luc	Ø 20,64	
	10/98-9/99				**PF311**	Ate	Ø 23,81	+ABS
	10/98-9/99				**PF312**	Ate	Ø 23,81	-ABS
	1/97-9/98				**PF287**		Ø 22,20	-ABS
Megane I (KA) SW 3/99-11/02								
1.4 16v (KA0D/W,1H/0) Eng.K4J714/ 750 (70kW)	99-02		R		**CF159**	Luc	Ø 20,64	
	99-02				**PF257**	Ate	Ø 22,20	Alu, +ABS
	99-02				**PF290**	Ate	Ø 22,20	Alu, -ABS
1.4 e (KA0V) Eng.E7J626 (55kW)	99-02		R		**CF159**	Luc	Ø 20,64	
	99-02				**PF257**	Ate	Ø 22,20	Alu, +ABS
	99-02				**PF290**	Ate	Ø 22,20	Alu, -ABS
1.6 16v (KA0B/4, KA11) Eng.K4M700/ 701/ 704/	99-02		R		**CF159**	Luc	Ø 20,64	
708 (79kW)	99-02				**PF311**	Ate	Ø 23,81	+ABS
	99-02				**PF312**	Ate	Ø 23,81	-ABS
1.6 e (KA0F) Eng.K7M702/ 703 (66kW)	99-02		R		**CF159**	Luc	Ø 20,64	
	99-02				**PF257**	Ate	Ø 22,20	Alu, +ABS
	99-02				**PF290**	Ate	Ø 22,20	Alu, -ABS
1.8 16v (KA0S, KA12/A/M/R) Eng.F4P720/ 722	01-02		R		**CF682**	Bdx	Ø 19,05	+ABS
(85-88kW)	01-02				**PF311**	Ate	Ø 23,81	+ABS
	01-02				**PF850**	Ate	Ø 23,81	Alu, +ABS, +ASR
1.9 D Eng.F8Q606/ 630/ 662/ 790 (40-44-47kW)	99-02		R		**CF159**	Luc	Ø 20,64	
	99-02				**PF257**	Ate	Ø 22,20	Alu, +ABS
	99-02				**PF290**	Ate	Ø 22,20	Alu, -ABS
1.9 DCi (KA05, KA1F) Eng.F9Q732/ 733 (75kW)	01-02		R		**CF682**	Bdx	Ø 19,05	+ABS, +TC
	01-02		R		**CF131**		Ø 17,46	-ABS

		Spare Parts	F/R	L/R	FRITECH ref.		DIMENSIONS mm.	NOTE
1.9 DCi (KA05, KA1F) Eng.F9Q732/ 733 (75kW)	01-02				**PF311**	Ate	Ø 23,81	+ABS
	01-02				**PF312**	Ate	Ø 23,81	-ABS
1.9 DTi (KA0N) Eng.F9Q731/ 736 (72kW)	99-01		R		**CF159**	Luc	Ø 20,64	
	99-01				**PF311**	Ate	Ø 23,81	+ABS
	99-01				**PF312**	Ate	Ø 23,81	-ABS
1.9 DTi (KA1U) Eng.F9Q744 (59kW)	01-02		R		**CF131**		Ø 17,46	
	01-02				**PF311**	Ate	Ø 23,81	+ABS
	01-02				**PF850**	Ate	Ø 23,81	Alu, +ABS, +ASR
Megane I (LA) Classic 9/96-11/02								
1.4 16v (LA0D/W,1H/0) Eng.K4J714/ 750 (70kW)	3/99-02		R		**CF682**	Bdx	Ø 19,05	+ABS
	3/99-02		R		**CF131**		Ø 17,46	-ABS
	3/99-02				**PF291**	Ate	Ø 20,64	Alu, +ABS, RHD
	3/99-02				**PF257**	Ate	Ø 22,20	Alu, +ABS, LHD
	3/99-02				**PF290**	Ate	Ø 22,20	Alu, -ABS
1.4 e (LA0E/V) Eng.E7J626/ 764 (52-55kW)	96-02		R		**CF682**	Bdx	Ø 19,05	+ABS
	96-02		R		**CF131**		Ø 17,46	-ABS
	96-2/99				**PF291**	Ate	Ø 20,64	Alu, +ABS
	3/99-02				**PF257**	Ate	Ø 22,20	Alu, +ABS, +RC
	96-2/99				**PF007**	Ate	Ø 20,64	-ABS
	3/99-02				**PF290**	Ate	Ø 22,20	Alu, -ABS
	96-02				**PF211**	Bdx	Ø 20,64	+ABS
1.6 16v (LA04/B, LA11/C/J) Eng.K4M700/ 701/ 708	3/99-02		R		**CF682**	Bdx	Ø 19,05	+ABS
(70-79-81-83kW)	3/99-02		R		**CF131**		Ø 17,46	-ABS
	3/99-02				**PF257**	Ate	Ø 22,20	Alu, +ABS
	3/99-02				**PF311**	Ate	Ø 23,81	+ABS, LHD
	3/99-02				**PF290**	Ate	Ø 22,20	Alu, -ABS, IP
1.6 e (LA0F/S) Eng.K7M702/ 703/ 790 (66kW)	96-99		R		**CF131**		Ø 17,46	
	96-99				**PF291**	Ate	Ø 20,64	Alu, +ABS, LHD
	96-99				**PF007**	Ate	Ø 20,64	-ABS
	96-99				**PF131**	Bdx	Ø 20,64	+ABS, RHD
	96-99				**PF211**	Bdx	Ø 20,64	+ABS, LHD
1.6 i (LA0L) Eng.K7M720 (55kW)	96-99		R		**CF131**		Ø 17,46	-ABS
	96-99				**PF291**	Ate	Ø 20,64	Alu, +ABS, LHD
	96-99				**PF007**	Ate	Ø 20,64	-ABS
	96-99				**PF211**	Bdx	Ø 20,64	+ABS
1.8 16v (LA06, LA12/A/M/R) Eng.F4P720/ 722	01-02		R		**CF682**	Bdx	Ø 19,05	+ABS
(85-88kW)	01-02				**PF311**	Ate	Ø 23,81	+ABS, LHD
1.9 D (LA0A/U) Eng.F8Q620/ 624 (47-66-68kW)	96-02		R		**CF682**	Bdx	Ø 19,05	+ABS
	96-02		R		**CF131**		Ø 17,46	
	96-02				**PF291**	Ate	Ø 20,64	Alu, Mod. A/U, +ABS
	96-02				**PF257**	Ate	Ø 22,20	Alu, Mod. R, +ABS, LHD
	9/96-2/99				**PF007**	Ate	Ø 20,64	Mod. A/U, -ABS
	3/99-02				**PF290**	Ate	Ø 22,20	Alu, Mod. R, -ABS
	96-02				**PF131**	Bdx	Ø 20,64	+ABS, RHD
	96-02				**PF211**	Bdx	Ø 20,64	+ABS
1.9 DCi (LA05, LA1F) Eng.F9Q732/ 733/ 738	01-02		R		**CF682**	Bdx	Ø 19,05	+ABS, +TC
(75kW)	01-02		R		**CF131**		Ø 17,46	-ABS
	01-02				**PF311**	Ate	Ø 23,81	+ABS
	01-02				**PF290**	Ate	Ø 22,20	Alu, -ABS
1.9 DT (LA0K/Y) Eng.F8Q784/ 786 (66kW)	96-02		R		**CF682**	Bdx	Ø 19,05	+ABS
	96-02		R		**CF131**		Ø 17,46	-ABS
	9/96-2/99				**PF291**	Ate	Ø 20,64	Alu, +ABS, LHD
	9/96-2/99				**PF007**	Ate	Ø 20,64	-ABS
	9/96-2/99				**PF211**	Bdx	Ø 20,64	+ABS
	96-02				**PF131**	Bdx	Ø 20,64	+ABS, RHD
1.9 DTi (LA08/N) Eng.F9Q730/ 731/ 734/ 736	97-01		R		**CF682**	Bdx	Ø 19,05	+ABS
(72kW)	97-01		R		**CF131**		Ø 17,46	
	9/96-2/99				**PF291**	Ate	Ø 20,64	Alu, +ABS, LHD
	99-01				**PF257**	Ate	Ø 22,20	Alu, +ABS, IP
	97-01				**PF311**	Ate	Ø 23,81	+ABS
	97-2/99				**PF007**	Ate	Ø 20,64	-ABS
	3/99-01				**PF290**	Ate	Ø 22,20	Alu, -ABS
	97-2/99				**PF211**	Bdx	Ø 20,64	+ABS

RENAULT

		Spare Parts	F/R	L/R	FRITECH ref.		DIMENSIONS mm.	NOTE
1.9 DTi (LA1U) Eng.F9Q744 (59kW)	01-02		R		**CF682**	Bdx	Ø 19,05	+ABS
	01-02		R		**CF131**		Ø 17,46	-ABS
	01-02				**PF311**	Ate	Ø 23,81	+ABS
1.9 TDi Eng.F8Q784 (69kW)	3/99-02		R		**CF682**	Bdx	Ø 19,05	+ABS
	96-02		R		**CF159**	Luc	Ø 20,64	
	1/96-2/99		R		**CF131**		Ø 17,46	
	96-02				**PF257**	Ate	Ø 22,20	Alu, +ABS
	96-02				**PF007**	Ate	Ø 20,64	-ABS
	96-02				**PF290**	Ate	Ø 22,20	Alu, -ABS
	1/97-2/99				**PF211**	Bdx	Ø 20,64	+ABS, LHD
	96-02				**PF131**	Bdx	Ø 20,64	+ABS, RHD
2.0 (LA07/G) Eng.F3R750/ 751/ 752	9/96-02		R		**CF131**		Ø 17,46	
(80-83-84-85kW)	9/96-02				**PF291**	Ate	Ø 20,64	Alu, +ABS, LHD
	3/99-02				**PF257**	Ate	Ø 22,20	Alu, +ABS, LHD, +RC
	9/96-2/99				**PF007**	Ate	Ø 20,64	-ABS
	3/99-02				**PF290**	Ate	Ø 22,20	Alu, -ABS, LHD
	9/96-2/99				**PF211**	Bdx	Ø 20,64	+ABS
Megane II (BM0, CM0), SW, Coupe 11/02-10/08								
1.4 16v (BM0B, CM0B) Eng.K4J730 (70-72kW)	02-08				**PF987**	Bch	Ø 23,81	Alu
	02-				**PF585**	Trw	Ø 23,81	Alu
1.4 16v (Exc. SW) Eng.K4J732 (60kW)	03-08				**PF987**	Bch	Ø 23,81	Alu
	03-				**PF585**	Trw	Ø 23,81	Alu
1.5 DCi Eng.K9K728/ 729 (74kW)	03-08				**PF987**	Bch	Ø 23,81	Alu
	03-08				**PF585**	Trw	Ø 23,81	Alu
1.5 DCi Eng.K9K734 (76kW)	07-08				**PF987**	Bch	Ø 23,81	Alu
	07-08				**PF585**	Trw	Ø 23,81	Alu
1.5 DCi (BM0F, CM0F) Eng.K9K702/ 710/ 722	02-08				**PF987**	Bch	Ø 23,81	Alu
(60kW)	02-				**PF585**	Trw	Ø 23,81	Alu
1.5 DCi, Coupe, Cabrio Eng.K9K724 (63kW)	05-08				**PF987**	Bch	Ø 23,81	Alu
	05-				**PF585**	Trw	Ø 23,81	Alu
1.5 DCi, Coupe, Cabrio Eng.K9K764/ 732 (78kW)	05-08				**PF987**	Bch	Ø 23,81	Alu
	05-08				**PF585**	Trw	Ø 23,81	Alu, -Pack Sportivo
1.6 16v Eng.K4M762/ 788 (77kW)	05-08				**PF987**	Bch	Ø 23,81	Alu
	05-08				**PF585**	Trw	Ø 23,81	Alu
1.6 16v, Coupe, Cabrio (BM0C, CM0C)	02-08				**PF987**	Bch	Ø 23,81	Alu
Eng.K4M760/ 761 (83kW)	02-				**PF585**	Trw	Ø 23,81	Alu
1.9 DCi Eng.F9Q800 (88kW)	03-08				**PF987**	Bch	Ø 23,81	Alu
	03-				**PF585**	Trw	Ø 23,81	Alu
1.9 DCi Eng.F9Q808 (66kW)	02-05				**PF585**	Trw	Ø 23,81	Alu
1.9 DCi Eng.F9Q808 (68kW)	04-08				**PF987**	Bch	Ø 23,81	Alu
	04-				**PF585**	Trw	Ø 23,81	Alu
1.9 DCi, Coupe, Cabrio Eng.F9Q803/ 804 (96kW)	05-08				**PF987**	Bch	Ø 23,81	Alu
	05-				**PF585**	Trw	Ø 23,81	Alu
1.9 DCi, Coupe, Cabrio Eng.F9Q804/ 818 (81kW)	05-08				**PF987**	Bch	Ø 23,81	Alu
	05-				**PF585**	Trw	Ø 23,81	Alu
1.9 DCi, Coupe, Cabrio (BM0G, CM0G) Eng.F9Q730/ 731/ 734/ 736/ 800 (60-75-77-88kW)	02-				**PF585**	Trw	Ø 23,81	Alu
2.0 16v T., Coupe, Cabrio (Exc. SW) Eng.F4R776	04-08				**PF987**	Bch	Ø 23,81	Alu
(120kW)	04-				**PF585**	Trw	Ø 23,81	Alu
2.0 16v, Coupe, Cabrio (BM0U, CM0U)	02-08				**PF987**	Bch	Ø 23,81	Alu
Eng.F4R770/ 771 (99kW)	02-				**PF585**	Trw	Ø 23,81	Alu
2.0 DCi Eng.M9R724 (127kW)	07-08				**PF987**	Bch	Ø 23,81	Alu
2.0 DCi, Coupe, Cabrio Eng.M9R700 (110kW)	05-08				**PF987**	Bch	Ø 23,81	Alu
	05-				**PF585**	Trw	Ø 23,81	Alu
2.0 Renault Sport (Exc. SW) Eng.F4R774 (165kW)	04-08				**PF987**	Bch	Ø 23,81	Alu
	04-				**PF585**	Trw	Ø 23,81	Alu
2.0 T. Sport F1 Team R26 Eng.F4R714 (169kW)	07-08				**PF987**	Bch	Ø 23,81	Alu
Megane III Coupe, Cabrio 11/08-								
1.2 TCe Eng.H5F400 (85kW)	12-				**PF990**	Trw	Ø 23,81	Alu
1.2 TCe Eng.H5F404 (97kW)	13-				**PF990**	Trw	Ø 23,81	Alu
1.4, TCe Eng.H4J700 (96kW)	09-				**PF990**	Trw	Ø 23,81	Alu
1.5 DCi Eng.K9K830 (63kW)	08-				**PF990**	Trw	Ø 23,81	Alu
1.5 DCi Eng.K9K832 (78kW)	09-				**PF990**	Trw	Ø 23,81	Alu

		Spare Parts	F/R	L/R	FRITECH ref.		DIMENSIONS mm.	NOTE
1.5 DCi Eng.K9K834 (66kW)	08-				**PF990**	Trw	Ø 23,81	Alu
1.5 DCi Eng.K9K836 (81kW)	09-				**PF990**	Trw	Ø 23,81	Alu
1.6 Eng.K4M848 (74kW)	08-				**PF990**	Trw	Ø 23,81	Alu
1.6 16v Eng.K4M858 (81kW)	08-				**PF990**	Trw	Ø 23,81	Alu
1.6 DCi Eng.R9M402 (96kW)	11-				**PF990**	Trw	Ø 23,81	Alu
1.9 DCi Eng.F9Q870/ 872 (96kW)	08-				**PF990**	Trw	Ø 23,81	Alu
2.0 16v Eng.F4R870 (132kW)	08-				**PF990**	Trw	Ø 23,81	Alu
2.0 16v Eng.M4R711 (103kW)	09-				**PF990**	Trw	Ø 23,81	Alu
2.0 DCi Eng.M9R610 (110kW)	09-				**PF990**	Trw	Ø 23,81	Alu
2.0 DCi Eng.M9R615 (118-120kW)	09-				**PF990**	Trw	Ø 23,81	Alu
Megane III, SW 11/08-2/16								
1.2 TCe Eng.H5F400 (85kW)	12-				**PF990**	Trw	Ø 23,81	Alu
1.2 TCe Eng.H5F404 (97kW)	13-				**PF990**	Trw	Ø 23,81	Alu
1.4 16v, TCe Eng.H4J700 (96kW)	09-				**PF990**	Trw	Ø 23,81	Alu
1.5 DCi Eng.K9K830 (63kW)	09-				**PF990**	Trw	Ø 23,81	Alu
1.5 DCi Eng.K9K832 (78kW)	09-				**PF990**	Trw	Ø 23,81	Alu
1.5 DCi Eng.K9K834 (66kW)	08-				**PF990**	Trw	Ø 23,81	Alu
1.5 DCi Eng.K9K836 (81kW)	08-				**PF990**	Trw	Ø 23,81	Alu
1.5 Dci, Coupé Eng.K9K846 (70kW)	12-				**PF990**	Trw	Ø 23,81	Alu
1.6 Eng.K4M848 (74kW)	08-				**PF990**	Trw	Ø 23,81	Alu
1.6 16v Eng.K4M858 (81-82kW)	08-				**PF990**	Trw	Ø 23,81	Alu
1.6 DCi Eng.R9M402/404 (96kW)	11-				**PF990**	Trw	Ø 23,81	Alu
1.6 GPL Eng.K4M866 (81kW)	13-				**PF990**	Trw	Ø 23,81	Alu
1.9 DCi Eng.F9Q870/ 872 (96kW)	08-				**PF990**	Trw	Ø 23,81	Alu
2.0 16v Eng.F4R870 (132kW)	09-				**PF990**	Trw	Ø 23,81	Alu
2.0 16v Eng.M4R704 (103kW)	08-				**PF990**	Trw	Ø 23,81	Alu
	08-				**PF990**	Trw	Ø 23,81	Alu
2.0 DCi Eng.M9R610 (110kW)	09-				**PF990**	Trw	Ø 23,81	Alu
2.0 DCi Eng.M9R615 (118-120kW)	09-				**PF990**	Trw	Ø 23,81	Alu
Modus (F/JP0) 12/04-9/13								
1.2 Eng.D4F786 (76kW)	11-		R		**CF780**	Loc	Ø 19,05	Alu
	11-				**PF908**	Ate	Ø 23,80	Alu, +ABS, +ESP
	11-				**PF715**	Ate	Ø 23,81	Alu, +ABS, -ESP
	11-				**PF714**	Ate	Ø 23,81	Alu, -ABS, -ESP
1.2 16v Eng.D4F740 (48kW)	05-		R		**CF780**	Loc	Ø 19,05	Alu, -ESP
	05-				**PF908**	Ate	Ø 23,80	Alu, +ABS, +ESP
	05-				**PF715**	Ate	Ø 23,81	Alu, +ABS, -ESP
	05-				**PF714**	Ate	Ø 23,81	Alu, -ABS
	05-				**PF812**	Ate	Ø 23,81	Alu, +ESP
	05-				**PF530**	Ate	Ø 23,81	Alu, -ESP
1.2 16v Eng.D4F740 (55kW)	04-		R		**CF780**	Loc	Ø 19,05	Alu, -ESP
	2/05-				**PF715**	Ate	Ø 23,81	Alu, +ABS, -ESP
	2/05-				**PF714**	Ate	Ø 23,81	Alu, -ABS
	04-1/05				**PF812**	Ate	Ø 23,81	Alu, +ESP
	04-1/05				**PF530**	Ate	Ø 23,81	Alu, -ESP
1.2 16v Eng.D4F764 (58kW)	06-		R		**CF780**	Loc	Ø 19,05	Alu, -ESP
	06-				**PF715**	Ate	Ø 23,81	Alu, +ABS, -ESP
	06-				**PF714**	Ate	Ø 23,81	Alu, -ABS
	06-				**PF812**	Ate	Ø 23,81	Alu, +ESP
	06-				**PF530**	Ate	Ø 23,81	Alu, -ESP
1.2 16v TCE Eng.D4F784 (74kW)	07-		R		**CF780**	Loc	Ø 19,05	Alu, -ESP
	07-				**PF715**	Ate	Ø 23,81	Alu, +ABS, -ESP
	07-				**PF714**	Ate	Ø 23,81	Alu, -ABS
1.4 16v Eng.K4J770 (72kW)	04-		R		**CF780**	Loc	Ø 19,05	Alu, -ESP
	04-				**PF908**	Ate	Ø 23,80	Alu, +ABS, +ESP
	2/05-				**PF715**	Ate	Ø 23,81	Alu, +ABS, -ESP
	2/05-				**PF714**	Ate	Ø 23,81	Alu, -ABS
	04-				**PF812**	Ate	Ø 23,81	Alu, +ESP
	04-1/05				**PF812**	Ate	Ø 23,81	Alu, +ESP
	04-				**PF530**	Ate	Ø 23,81	Alu, -ESP
	04-1/05				**PF530**	Ate	Ø 23,81	Alu, -ESP
1.5 DCi Eng.K9K750 (60kW)	05-		R		**CF780**	Loc	Ø 19,05	Alu
	05-				**PF908**	Ate	Ø 23,80	Alu, +ABS, +ESP
	05-				**PF715**	Ate	Ø 23,81	Alu, +ABS, -ESP

RENAULT

		Spare Parts	F/R	L/R	FRITECH ref.		DIMENSIONS mm.	NOTE
1.5 DCi Eng.K9K750 (63kW)	04-		R		**CF780**	Loc	Ø 19,05	Alu, -ESP
	04-				**PF908**	Ate	Ø 23,80	Alu, +ABS, +ESP
	2/05-				**PF715**	Ate	Ø 23,81	Alu, +ABS, -ESP
	04-1/05				**PF812**	Ate	Ø 23,81	Alu, +ESP
	04-1/05				**PF530**	Ate	Ø 23,81	Alu, -ESP
1.5 DCi Eng.K9K752 (48kW)	06-		R		**CF780**	Loc	Ø 19,05	Alu, -ESP
	06-				**PF715**	Ate	Ø 23,81	Alu, +ABS, -ESP
	06-				**PF812**	Ate	Ø 23,81	Alu, +ESP
1.5 DCi Eng.K9K752 (50kW)	04-		R		**CF780**	Loc	Ø 19,05	Alu, +ESP
	04-				**PF908**	Ate	Ø 23,80	Alu, +ABS, +ESP
	2/05-				**PF715**	Ate	Ø 23,81	Alu, +ABS, -ESP
	04-1/05				**PF812**	Ate	Ø 23,81	Alu, +ESP
	04-				**PF530**	Ate	Ø 23,81	Alu, -ESP
1.5 DCi Eng.K9K764 (78kW)	05-		R		**CF780**	Loc	Ø 19,05	Alu, -ESP
	05-				**PF908**	Ate	Ø 23,80	Alu, +ABS, +ESP
	05-				**PF715**	Ate	Ø 23,81	Alu, +ABS, -ESP
	04-1/05				**PF812**	Ate	Ø 23,81	Alu, +ESP
	04-1/05				**PF530**	Ate	Ø 23,81	Alu, -ESP
1.5 DCi Eng.K9K770 (55kW)	10-		R		**CF780**	Loc	Ø 19,05	Alu, +ESP
	10-				**PF908**	Ate	Ø 23,80	Alu, +ABS, +ESP
1.5 DCi Eng.K9K772 (65kW)	10-		R		**CF780**	Loc	Ø 19,05	Alu, +ESP
	10-				**PF908**	Ate	Ø 23,80	Alu, +ABS, +ESP
1.5 DCi Eng.K9K772 (76kW)	06-		R		**CF780**	Loc	Ø 19,05	Alu, -ESP
	06-				**PF812**	Ate	Ø 23,81	Alu, +ESP
1.6 Eng.K4M794 (65kW)	04-		R		**CF780**	Loc	Ø 19,05	Alu
	04-				**PF908**	Ate	Ø 23,80	Alu, +ABS, +ESP
	2/05-				**PF715**	Ate	Ø 23,81	Alu, +ABS, -ESP
	04-1/05				**PF812**	Ate	Ø 23,81	Alu, +ESP
	04-1/05				**PF530**	Ate	Ø 23,81	Alu, -ESP
1.6 16v Eng.K4M790 (82kW)	04-		R		**CF780**	Loc	Ø 19,05	Alu, -ESP
	04-				**PF908**	Ate	Ø 23,80	Alu, +ABS, +ESP
	2/05-				**PF715**	Ate	Ø 23,81	Alu, +ABS, -ESP
	04-1/05				**PF812**	Ate	Ø 23,81	Alu, +ESP
	04-1/05				**PF530**	Ate	Ø 23,81	Alu, -ESP
R11 (B/C37) 3/83-12/90								
1.1 (B/C371) Eng.C1E715/ 720 (25-33-35kW)	86-90		R	L	**CF017**	Bdx	Ø 22,00	
	83-86		R	L	**CF023**	Luc	Ø 17,78	Incl. Spain
	86-90		R	R	**CF016**	Bdx	Ø 22,00	
	83-86		R	R	**CF024**	Luc	Ø 17,78	Incl. Spain
	83-86				**PF001**		Ø 19,05	Spain
	83-90				**PF021**		Ø 19,05	Exc. Spain
1.2 (B/C37S) Eng.C1G700/ 710 (40kW)	86-90		R	L	**CF025**	Bdx	Ø 20,64	CRCI
	84-86		R	L	**CF017**	Bdx	Ø 22,00	
	84-86		R	L	**CF012**	Luc	Ø 22,22	
	86-90		R	R	**CF026**	Bdx	Ø 20,64	CRCI
	84-86		R	R	**CF016**	Bdx	Ø 22,00	
	84-86		R	R	**CF013**	Luc	Ø 22,22	
	84-86				**PF001**		Ø 19,05	
	86-90				**PF021**		Ø 19,05	
1.4 (B/C372, B/C37C) Eng.C1J715 (35-43-44kW)	86-90		R	L	**CF025**	Bdx	Ø 20,64	CRCI
	86-90		R	L	**CF012**	Luc	Ø 22,22	
	86-90		R	R	**CF026**	Bdx	Ø 20,64	CRCI
	86-90		R	R	**CF013**	Luc	Ø 22,22	
	86-90				**PF021**		Ø 19,05	
1.4 (B/C372/373) Eng.C2J717/ 755	86-90		R	L	**CF025**	Bdx	Ø 20,64	CRCI, Exc. Spain
(43-46-50-53kW)	85-90		R	L	**CF017**	Bdx	Ø 22,00	Incl. Spain
	83-86		R	L	**CF012**	Luc	Ø 22,22	Exc. Spain
	86-90		R	R	**CF026**	Bdx	Ø 20,64	CRCI, Exc. Spain
	85-90		R	R	**CF016**	Bdx	Ø 22,00	Incl. Spain
	83-86		R	R	**CF013**	Luc	Ø 22,22	Exc. Spain
	83-90				**PF021**		Ø 19,05	Exc. Spain
	83-90				**PF001**		Ø 19,05	Spain

		Spare Parts	F/R	L/R	FRITECH ref.		DIMENSIONS mm.	NOTE
1.4 (B/C372/373) Eng.C2J718/ 757	86-90		R	L	**CF025**	Bdx	Ø 20,64	CRCI, Exc. Spain
(43-46-50-53kW)	85-90		R	L	**CF017**	Bdx	Ø 22,00	Incl. Spain
	85-86		R	L	**CF012**	Luc	Ø 22,22	Exc. Spain
	86-90		R	R	**CF026**	Bdx	Ø 20,64	CRCI, Exc. Spain
	85-90		R	R	**CF016**	Bdx	Ø 22,00	Incl. Spain
	85-86		R	R	**CF013**	Luc	Ø 22,22	Exc. Spain
	83-90				**PF021**		Ø 19,05	Exc. Spain
	83-90				**PF001**		Ø 19,05	Spain
1.4 (B/C37A/C/R) Eng.C2J720/ 730/ 766/ 767/ 768	86-90		R	L	**CF025**	Bdx	Ø 20,64	CRCI
(43-46-50-53kW)	86-90		R	L	**CF012**	Luc	Ø 22,22	
	86-90		R	R	**CF026**	Bdx	Ø 20,64	CRCI
	86-90		R	R	**CF013**	Luc	Ø 22,22	
	86-90				**PF021**		Ø 19,05	
1.4 T. (B/C375) Eng.C1J760/ 764 (77kW)	84-86		R	L	**CF017**	Bdx	Ø 22,00	
	84-86		R	L	**CF012**	Luc	Ø 22,22	
	84-86		R	R	**CF016**	Bdx	Ø 22,00	
	84-86		R	R	**CF013**	Luc	Ø 22,22	
	84-86				**PF008**	Ate	Ø 19,00	-ABS, RHD
	84-86				**PF021**		Ø 19,05	LHD
1.4 T. (B/C375) Eng.C1J770/ 782 (85-88kW)	86-90				**PF008**	Ate	Ø 19,00	-ABS, RHD
	86-90				**PF021**		Ø 19,05	LHD
1.6 D, TD (B/C374) Eng.F8M700/ 720/ 730 (40kW)	86-90		R	L	**CF025**	Bdx	Ø 20,64	CRCI, Exc. Spain
	83-86		R	L	**CF017**	Bdx	Ø 22,00	Spain
	83-86		R	L	**CF012**	Luc	Ø 22,22	
	86-90		R	R	**CF026**	Bdx	Ø 20,64	CRCI, Exc. Spain
	83-86		R	R	**CF016**	Bdx	Ø 22,00	Spain
	83-86		R	R	**CF013**	Luc	Ø 22,22	
	83-90				**PF021**		Ø 19,05	Exc. Spain
	83-90				**PF001**		Ø 19,05	Spain
1.7 (B/C37 D/N) Eng.F2N708/ 710/ 732/ 742/ 798	87-90		R	L	**CF025**	Bdx	Ø 20,64	CRCI
(55-59-64-68kW)	87-90		R	R	**CF026**	Bdx	Ø 20,64	CRCI
	87-90				**PF021**		Ø 19,05	
1.7 (B/C376) Eng.F2N700/ 704 (55-59-64-68kW)	83-86		R	L	**CF017**	Bdx	Ø 22,00	
	83-9/86		R	L	**CF012**	Luc	Ø 22,22	
	83-86		R	R	**CF016**	Bdx	Ø 22,00	
	83-9/86		R	R	**CF013**	Luc	Ø 22,22	
	83-86				**PF021**		Ø 19,05	RHD
	83-86				**PF001**		Ø 19,05	LHD
1.7 (B/C37E) Eng.F3N708 (69kW)	87-90		R	L	**CF025**	Bdx	Ø 20,64	CRCI
	87-90		R	R	**CF026**	Bdx	Ø 20,64	CRCI
	87-90				**PF021**		Ø 19,05	
1.7 (B/C37F) Eng.F3N718 (55-66-70kW)	86-90		R	L	**CF025**	Bdx	Ø 20,64	CRCI, Exc. Spain
	84-90		R	L	**CF017**	Bdx	Ø 22,00	Spain
	84-86		R	L	**CF012**	Luc	Ø 22,22	
	86-90		R	R	**CF026**	Bdx	Ø 20,64	CRCI, Exc. Spain
	84-90		R	R	**CF016**	Bdx	Ø 22,00	Spain
	84-86		R	R	**CF013**	Luc	Ø 22,22	
	84-90				**PF021**		Ø 19,05	RHD
1.7 (B/C37L) Eng.F2N730 (55-59-64-68kW)	86-90		R	L	**CF025**	Bdx	Ø 20,64	CRCI
	86-90		R	R	**CF026**	Bdx	Ø 20,64	CRCI
	86-90				**PF021**		Ø 19,05	
R12 (117) 10/69-8/80								
1.3 (1170), Break Eng.81002 (37kW)	75-80		R	L	**CF087**	Bdx	Ø 22,00	
	75-80		R	L	**CF611**	Luc	Ø 22,22	
	75-80		R	R	**CF086**	Bdx	Ø 22,00	
	75-80		R	R	**CF612**	Luc	Ø 22,22	
	75-80				**PF020**	Ate	Ø 19,05	
1.3 (1170), Break Eng.8100297 (40kW)	69-80		R	L	**CF087**	Bdx	Ø 22,00	
	69-80		R	L	**CF611**	Luc	Ø 22,22	
	69-80		R	R	**CF086**	Bdx	Ø 22,00	
	69-80		R	R	**CF612**	Luc	Ø 22,22	
	69-80				**PF020**	Ate	Ø 19,05	
1.3 (1171) Break Eng.810 (33kW)	70-		R		**CF120**	Bdx	Ø 22,00	
	70-				**PF020**	Ate	Ø 19,05	

RENAULT

		Spare Parts	F/R	L/R	FRITECH ref.		DIMENSIONS mm.	NOTE
1.3 (1330) Break Eng.81002 (36-39kW)	72-80		R		**CF120**	Bdx	Ø 22,00	
	72-80				**PF020**	Ate	Ø 19,05	
1.3 TS (1177) Eng.81006 (44kW)	72-80		R	L	**CF087**	Bdx	Ø 22,00	
	72-80		R	L	**CF611**	Luc	Ø 22,22	
	72-80		R	R	**CF086**	Bdx	Ø 22,00	
	72-80		R	R	**CF612**	Luc	Ø 22,22	
	72-80				**PF020**	Ate	Ø 19,05	
1.3 TS (1337) Break Eng.81006 (44kW)	72-80		R		**CF120**	Bdx	Ø 22,00	
	72-80				**PF020**	Ate	Ø 19,05	
1.6 (1173) Gordini Eng.82120/ 807 (40-48-50-61-66-83kW)	-74				**PF020**	Ate	Ø 19,05	Ch 331643-
R14 (121) 9/79-12/83								
1.2 (1210) Eng.129 (42-43kW)	80-83		R	L	**CF017**	Bdx	Ø 22,00	
	80-83		R	L	**CF012**	Luc	Ø 22,22	
	80-83		R	R	**CF016**	Bdx	Ø 22,00	
	80-83		R	R	**CF013**	Luc	Ø 22,22	
	80-83				**PF020**	Ate	Ø 19,05	+Servo
1.4 (1212) Eng.150 (52kW)	79-83		R	L	**CF017**	Bdx	Ø 22,00	
	79-83		R	L	**CF012**	Luc	Ø 22,22	
	79-83		R	R	**CF016**	Bdx	Ø 22,00	
	79-83		R	R	**CF013**	Luc	Ø 22,22	
	79-83				**PF020**	Ate	Ø 19,05	+Servo
1.4 (1213) Eng.126/ 150700/ X5J7 (44-52kW)	81-83		R	L	**CF017**	Bdx	Ø 22,00	
	81-83		R	L	**CF012**	Luc	Ø 22,22	
	81-83		R	R	**CF016**	Bdx	Ø 22,00	
	81-83		R	R	**CF013**	Luc	Ø 22,22	
	81-83				**PF020**	Ate	Ø 19,05	+Servo
R15 3/72-10/80								
1.3 (1300) Eng.81002	72-80		R	L	**CF087**	Bdx	Ø 22,00	
(29-31-32-33-37-40-44-47kW)	72-80		R	L	**CF611**	Luc	Ø 22,22	
	72-80		R	R	**CF086**	Bdx	Ø 22,00	
	72-80		R	R	**CF612**	Luc	Ø 22,22	
	72-80				**PF020**	Ate	Ø 19,05	Exc. Usa/Island/Australia/Switzerland
	72-80				**PF001**		Ø 19,05	Usa/Island/Australia/Switzerland
1.6 (1302) Eng.807 (40-48-50-61-66-83kW)	72-80		R		**CF120**	Bdx	Ø 22,00	
1.6 (1304,1308) Eng.821 (40-48-50-61-66-83kW)	72-80		R	L	**CF087**	Bdx	Ø 22,00	
	72-80		R	R	**CF086**	Bdx	Ø 22,00	
	72-80				**PF001**		Ø 19,05	Usa/Canada
R16 (115) 9/65-8/80								
1.6 (1152, 1153, 1157) Eng.821	-6/74		R		**CF120**	Bdx	Ø 22,00	Ch 133824-
(40-48-50-61-66-83kW)	10/76-80				**PF001**		Ø 19,05	
	-10/76				**CT009**		Ø 12,00	Ch 133824 / 19406-
1.6 (1156) Eng.843720/ 721 (66-68-71kW)	10/76-80				**PF001**		Ø 19,05	
1.6 TS (1151, 1154) Eng.807	-6/74		R		**CF120**	Bdx	Ø 22,00	Ch 226626-
(40-48-50-61-66-83kW)	10/76-80				**PF001**		Ø 19,05	
	-10/76				**CT009**		Ø 12,00	Ch 226626-
R17 3/72-10/80								
1.6 (1312, 1316, 1322) Eng.80710/ 11 (66kW)	72-76		R		**CF120**	Bdx	Ø 22,00	Incl. Usa/Canada
1.6 (1313, 1323) Eng.80710/ 11 (66kW)	72-80		R	L	**CF087**	Bdx	Ø 22,00	Exc. Canada
	72-80		R	R	**CF086**	Bdx	Ø 22,00	Exc. Canada
	72-80		R		**CF120**	Bdx	Ø 22,00	Canada
	72-80				**PF001**		Ø 19,05	Canada
1.6 (1314, 1324) Eng.807 (40-48-50-61-66-83kW)	72-80		R	L	**CF087**	Bdx	Ø 22,00	Exc. Canada
	72-80		R	R	**CF086**	Bdx	Ø 22,00	Exc. Canada
	72-80		R		**CF120**	Bdx	Ø 22,00	Canada
	72-80				**PF001**		Ø 19,05	Canada
1.6 Gordini (1317, 1327) Eng.844 (72-79kW)	74-80		R	L	**CF087**	Bdx	Ø 22,00	Exc. Usa
	74-80		R	R	**CF086**	Bdx	Ø 22,00	Exc. Usa
	74-80		R		**CF120**	Bdx	Ø 22,00	Usa
	74-80				**PF001**		Ø 19,05	Usa
1.6 Gordini (1318, 1328) Eng.84305 (68-79kW)	74-80		R	L	**CF087**	Bdx	Ø 22,00	Exc. Usa
	74-80		R	R	**CF086**	Bdx	Ø 22,00	Exc. Usa
	74-80		R		**CF120**	Bdx	Ø 22,00	Usa
	74-80				**PF001**		Ø 19,05	Usa

		Spare Parts	F/R	L/R	FRITECH ref.		DIMENSIONS mm.	NOTE
R18 (134) 4/78-7/86								
1.4 (1340) Eng.847720/ 722 (46kW)	78-86		R	L	**CF016**	Bdx	Ø 22,00	
	78-86		R	L	**CF012**	Luc	Ø 22,22	
	78-6/83		R	R	**CF017**	Bdx	Ø 22,00	
	78-86		R	R	**CF013**	Luc	Ø 22,22	
	78-86				**PF020**	Ate	Ø 19,05	
1.4 (1349) Eng.847720/ 722 (49kW)	80-82		R	L	**CF016**	Bdx	Ø 22,00	
	80-82		R	R	**CF017**	Bdx	Ø 22,00	
	78-82				**PF020**	Ate	Ø 19,05	
1.6 (1341) Eng.841717 (54kW)	82-86		R	L	**CF016**	Bdx	Ø 22,00	Incl. Switzerland
	82-86		R	L	**CF012**	Luc	Ø 22,22	
	82-6/83		R	R	**CF017**	Bdx	Ø 22,00	Incl. Switzerland
	82-86		R	R	**CF013**	Luc	Ø 22,22	
	82-86				**PF020**	Ate	Ø 19,05	Exc. Switzerland
	82-86				**PF001**		Ø 19,05	Switzerland
1.6 (1341) Eng.841725/ 726 (58kW)	78-82		R	L	**CF016**	Bdx	Ø 22,00	Incl. Switzerland
	78-82		R	L	**CF012**	Luc	Ø 22,22	
	78-82		R	R	**CF017**	Bdx	Ø 22,00	Incl. Switzerland
	78-82		R	R	**CF013**	Luc	Ø 22,22	
	78-82				**PF020**	Ate	Ø 19,05	Exc. Switzerland
	78-82				**PF001**		Ø 19,05	Switzerland
1.6 (1342) Eng.A6M725/ 726 (71kW)	82-86		R	L	**CF016**	Bdx	Ø 22,00	
	82-86		R	L	**CF012**	Luc	Ø 22,22	
	81-6/83		R	R	**CF017**	Bdx	Ø 22,00	
	82-86		R	R	**CF013**	Luc	Ø 22,22	
	82-86				**PF295**		Ø 20,64	
1.6 T. (134,135A) Eng.A7L752 (82kW)	82-86				**PF122**		Ø 20,64	Switzerland/Germany, -ABS
1.6 T. (1345) Eng.807727 (80kW)	80-82		R		**CF020**		Ø 22,00	Exc. Spain
	80-82				**PF122**		Ø 20,64	Exc. Spain
1.6 T. (1345) Eng.A5L717/ 718 (92kW)	82-86				**PF122**		Ø 20,64	Exc. Spain
2.0 (1343) Eng.J6R716 (74-77-81kW)	82-86		R		**CF020**		Ø 22,00	Exc. Spain
	82-86				**PF122**		Ø 20,64	Exc. Spain
	82-86				**PF295**		Ø 20,64	
2.1 D (1344) Eng.852710/ J8S711 (43-46-50-53kW)	81-86		R	L	**CF016**	Bdx	Ø 22,00	
	81-86		R	L	**CF012**	Luc	Ø 22,22	Incl. Spain
	81-86		R	R	**CF017**	Bdx	Ø 22,00	Exc. Spain
	81-86		R	R	**CF013**	Luc	Ø 22,22	Incl. Spain
	81-86				**PF020**	Ate	Ø 19,05	Spain
	81-86				**PF021**		Ø 19,05	Exc. Spain
2.1 TD (1346) Eng.J8S712 (65kW)	81-86		R		**CF020**		Ø 22,00	
	81-86				**PF122**		Ø 20,64	
R18 (135) Break 5/79-12/86								
1.4 (1350) Eng.847720/ 722 (46kW)	79-86		R	L	**CF020**		Ø 22,00	Ch 3401-, Exc. Spain
	79-86		R	R	**CF125**	Bdx	Ø 22,00	Ch 3401-, Exc. Spain
	79-86		R		**CF020**		Ø 22,00	Spain
	79-				**PF020**	Ate	Ø 19,05	Ch -114800
	-86				**PF001**		Ø 19,05	Ch 114801-
1.4 (1359) Eng.847720/ 722 (49kW)	79-86		R	L	**CF020**		Ø 22,00	Ch 3401-, Exc. Spain
	79-86		R	R	**CF125**	Bdx	Ø 22,00	Ch 3401-, Exc. Spain
	79-86		R		**CF020**		Ø 22,00	Spain
	82-86				**PF001**		Ø 19,05	Switzerland
1.6 Eng.A2M723 (52kW)	86-93		R	L	**CF020**		Ø 22,00	Ch 3401-, Exc. Spain
	86-93		R	R	**CF125**	Bdx	Ø 22,00	Ch 3401-, Exc. Spain
	86-93		R		**CF020**		Ø 22,00	Spain
1.6 Eng.A7L752 (82kW)	83-86		R	L	**CF020**		Ø 22,00	Ch 3401-, Exc. Spain
	83-86		R	R	**CF125**	Bdx	Ø 22,00	Ch 3401-, Exc. Spain
	83-86		R		**CF020**		Ø 22,00	Spain
1.6 (R1352) Eng.A6M725/ 726 (71kW)	82-86		R	L	**CF020**		Ø 22,00	Ch 3401-, Exc. Spain
	82-86		R	R	**CF125**	Bdx	Ø 22,00	Ch 3401-, Exc. Spain
	82-86		R		**CF020**		Ø 22,00	Spain
	82-86				**PF295**		Ø 20,64	
1.6 T. Eng.807727 (80kW)	82-86		R	L	**CF020**		Ø 22,00	Ch 3401-, Exc. Spain
	82-86		R	R	**CF125**	Bdx	Ø 22,00	Ch 3401-, Exc. Spain
	82-86		R		**CF020**		Ø 22,00	Spain

		Spare Parts	F/R	L/R	FRITECH ref.		DIMENSIONS mm.	NOTE
1.6 T. (1355) Eng.A5L717/ 718 (92kW)	82-86		R	L	**CF020**		Ø 22,00	Ch 3401-, Exc. Spain
	82-86		R	R	**CF125**	Bdx	Ø 22,00	Ch 3401-, Exc. Spain
	82-86		R		**CF020**		Ø 22,00	Spain
	82-86				**PF122**		Ø 20,64	
1.6, 4WD (1351) Eng.841717/ A2M723 (54kW)	82-86		R	L	**CF020**		Ø 22,00	Ch 3401-, Exc. Spain
	82-86		R	R	**CF125**	Bdx	Ø 22,00	Ch 3401-, Exc. Spain
	82-86		R		**CF020**		Ø 22,00	Spain
	-86				**PF020**	Ate	Ø 19,05	Ch 3401-, Exc. Spain, Exc. 4WD
	-86				**PF001**		Ø 19,05	Ch 40002-, Spain, Exc. 4WD
	82-86				**PF021**		Ø 19,05	4WD
1.6, 4WD (1351) Eng.841725/ 726 (58kW)	79-82		R	L	**CF020**		Ø 22,00	Ch 3401-, Exc. Spain
	79-82		R	R	**CF125**	Bdx	Ø 22,00	Ch 3401-, Exc. Spain
	79-82		R		**CF020**		Ø 22,00	Spain
	79-82				**PF020**	Ate	Ø 19,05	Exc. Spain
	-82				**PF001**		Ø 19,05	Ch 40002-, Spain
2.0 (1353) Eng.J6R716 (77kW)	81-86		R	L	**CF020**		Ø 22,00	Ch 3401-, Exc. Spain
	81-86		R	R	**CF125**	Bdx	Ø 22,00	Ch 3401-, Exc. Spain
	81-86		R		**CF020**		Ø 22,00	Spain
	81-86				**PF122**		Ø 20,64	
2.0 Allroad Eng.J6R712/ 714/ 716/ 780 (77kW)	83-86		R	L	**CF020**		Ø 22,00	Ch 3401-, Exc. Spain
	83-86		R	R	**CF125**	Bdx	Ø 22,00	Ch 3401-, Exc. Spain
	83-86		R		**CF020**		Ø 22,00	Spain
2.1 D (1354) Eng.852710/ J8S711 (49-53kW)	80-86		R	L	**CF020**		Ø 22,00	Ch 3401-, Exc. Spain
	80-86		R	R	**CF125**	Bdx	Ø 22,00	Ch 3401-, Exc. Spain
	80-86		R		**CF020**		Ø 22,00	Spain
	80-86				**PF020**	Ate	Ø 19,05	
	80-86				**PF021**		Ø 19,05	Exc. Spain
2.1 TD (1356) Eng.J8S712 (65kW)	81-86		R	L	**CF020**		Ø 22,00	Ch 3401-, Exc. Spain
	81-86		R	R	**CF125**	Bdx	Ø 22,00	Ch 3401-, Exc. Spain
	81-86		R		**CF020**		Ø 22,00	Spain
	81-86				**PF122**		Ø 20,64	
2.2 (135B) Eng.J7T718 (76kW)	84-86		R	L	**CF020**		Ø 22,00	Ch 3401-, Exc. Spain
	84-86		R	R	**CF125**	Bdx	Ø 22,00	Ch 3401-, Exc. Spain
	84-86		R		**CF020**		Ø 22,00	Spain
	84-86				**PF122**		Ø 20,64	Switzerland
R19 I (B/C53) 1/88-12/92								
1.2 (B/C530) Eng.C1G730 (40kW)	4/91-4/92		R	L	**CF061**	Bdx	Ø 20,64	CRCI
	88-3/91		R	L	**CF062**	Bdx	Ø 20,64	CRCI
	4/91-4/92		R	L	**CF043**	Luc	Ø 20,64	CRCI
	4/91-4/92		R	R	**CF062**	Bdx	Ø 20,64	CRCI
	88-3/91		R	R	**CF061**	Bdx	Ø 20,64	CRCI
	4/91-4/92		R	R	**CF042**	Luc	Ø 20,64	CRCI
	88-9/91				**PF008**	Ate	Ø 19,00	-ABS
	10/91-4/92				**PF007**	Ate	Ø 20,64	-ABS
1.4 (B/C532) Kat Eng.C3J710 (43kW)	1/89-3/91		R	L	**CF062**	Bdx	Ø 20,64	CRCI
	4/91-4/92		R	L	**CF061**	Bdx	Ø 20,64	CRCI
	4/91-4/92		R	L	**CF043**	Luc	Ø 20,64	CRCI
	1/89-3/91		R	R	**CF061**	Bdx	Ø 20,64	CRCI
	4/91-4/92		R	R	**CF062**	Bdx	Ø 20,64	CRCI
	4/91-4/92		R	R	**CF042**	Luc	Ø 20,64	CRCI
	1/89-9/91				**PF008**	Ate	Ø 19,00	-ABS
	10/91-4/92				**PF007**	Ate	Ø 20,64	-ABS
1.4 (B/C53A,G) Eng.E6J700/ 701 (59kW)	4/91-4/92		R	L	**CF061**	Bdx	Ø 20,64	CRCI
	88-3/91		R	L	**CF062**	Bdx	Ø 20,64	CRCI
	4/91-4/92		R	L	**CF043**	Luc	Ø 20,64	CRCI
	4/91-4/92		R	R	**CF062**	Bdx	Ø 20,64	CRCI
	88-3/91		R	R	**CF061**	Bdx	Ø 20,64	CRCI
	4/91-4/92		R	R	**CF042**	Luc	Ø 20,64	CRCI
	88-9/91				**PF008**	Ate	Ø 19,00	-ABS
	10/91-4/92				**PF007**	Ate	Ø 20,64	-ABS
1.4 (B/C53P) Eng.C2J772 (43-46-50-53kW)	1/89-12/89		R	L	**CF062**	Bdx	Ø 20,64	CRCI
	1/89-12/89		R	R	**CF061**	Bdx	Ø 20,64	CRCI
	1/89-12/89				**PF008**	Ate	Ø 19,00	-ABS

		Spare Parts	F/R	L/R	FRITECH ref.		DIMENSIONS mm.	NOTE
1.7 (B/C53B) Eng.F3N740/ 741 (55-66-70kW)	4/91-4/92		R	L	**CF061**	Bdx	Ø 20,64	CRCI
	88-3/91		R	L	**CF062**	Bdx	Ø 20,64	CRCI
	4/91-4/92		R	L	**CF043**	Luc	Ø 20,64	CRCI
	4/91-4/92		R	R	**CF062**	Bdx	Ø 20,64	CRCI
	88-3/91		R	R	**CF061**	Bdx	Ø 20,64	CRCI
	4/91-4/92		R	R	**CF042**	Luc	Ø 20,64	CRCI
	88-9/91				**PF008**	Ate	Ø 19,00	-ABS
	10/91-4/92				**PF211**	Bdx	Ø 20,64	+ABS
1.7 (B/C53C) Eng.F3N742/ 743 (55-66-70kW)	4/91-4/92		R	L	**CF061**	Bdx	Ø 20,64	CRCI
	88-3/91		R	L	**CF062**	Bdx	Ø 20,64	CRCI
	4/91-4/92		R	L	**CF043**	Luc	Ø 20,64	CRCI
	4/91-4/92		R	R	**CF062**	Bdx	Ø 20,64	CRCI
	88-3/91		R	R	**CF061**	Bdx	Ø 20,64	CRCI
	4/91-4/92		R	R	**CF042**	Luc	Ø 20,64	CRCI
	88-9/91				**PF008**	Ate	Ø 19,00	-ABS
	10/91-4/92				**PF211**	Bdx	Ø 20,64	+ABS
1.8 16v (B/C53D) Eng.F7P704 (99-101kW)	89-92				**PF007**	Ate	Ø 20,64	-ABS
	89-92				**PF211**	Bdx	Ø 20,64	+ABS
1.9 D (B/C534, B/C53J) Eng.F8Q706/ 742 (47kW)	4/91-4/92		R	L	**CF061**	Bdx	Ø 20,64	CRCI
	88-3/91		R	L	**CF062**	Bdx	Ø 20,64	CRCI
	4/91-4/92		R	L	**CF043**	Luc	Ø 20,64	CRCI
	4/91-4/92		R	R	**CF062**	Bdx	Ø 20,64	CRCI
	88-3/91		R	R	**CF061**	Bdx	Ø 20,64	CRCI
	4/91-4/92		R	R	**CF042**	Luc	Ø 20,64	CRCI
	88-9/91				**PF008**	Ate	Ø 19,00	-ABS
	10/91-4/92				**PF007**	Ate	Ø 20,64	-ABS
	10/91-4/92				**PF211**	Bdx	Ø 20,64	+ABS
1.9 TD (C/B53K) Eng.F8Q740/ 756/ 764 (66-68kW)	4/91-4/92		R	L	**CF061**	Bdx	Ø 20,64	CRCI
	90-3/91		R	L	**CF062**	Bdx	Ø 20,64	CRCI
	4/91-4/92		R	L	**CF043**	Luc	Ø 20,64	CRCI
	4/91-4/92		R	R	**CF062**	Bdx	Ø 20,64	CRCI
	90-3/91		R	R	**CF061**	Bdx	Ø 20,64	CRCI
	4/91-4/92		R	R	**CF042**	Luc	Ø 20,64	CRCI
	90-9/91				**PF008**	Ate	Ø 19,00	-ABS
	10/91-4/92				**PF211**	Bdx	Ø 20,64	+ABS
R19 I (D53) Cabrio 9/88-4/92								
1.7 (D53B) Eng.F3N740/ 741 (55-66-70kW)	4/91-4/92		R	L	**CF061**	Bdx	Ø 20,64	CRCI
	88-3/91		R	L	**CF062**	Bdx	Ø 20,64	CRCI
	4/91-4/92		R	L	**CF043**	Luc	Ø 20,64	CRCI
	4/91-4/92		R	R	**CF062**	Bdx	Ø 20,64	CRCI
	88-3/91		R	R	**CF061**	Bdx	Ø 20,64	CRCI
	4/91-4/92		R	R	**CF042**	Luc	Ø 20,64	CRCI
	88-9/91				**PF008**	Ate	Ø 19,00	-ABS
	10/91-4/92				**PF211**	Bdx	Ø 20,64	+ABS
1.7 (D53F) Eng.F3N742/ 743 (55-66-70kW)	91-92		R	L	**CF061**	Bdx	Ø 20,64	CRCI
	91-92		R	L	**CF043**	Luc	Ø 20,64	CRCI
	91-92		R	R	**CF062**	Bdx	Ø 20,64	CRCI
	91-92		R	R	**CF042**	Luc	Ø 20,64	CRCI
	91-92				**PF008**	Ate	Ø 19,00	-ABS
	91-92				**PF131**	Bdx	Ø 20,64	+ABS
1.8 16v (D53D) Eng.F7P704 (99-101kW)	89-92				**PF007**	Ate	Ø 20,64	-ABS
	89-92				**PF211**	Bdx	Ø 20,64	+ABS
R19 I (L53) Chamade 1/88-12/92								
1.4 Eng.E6J700/ 701 (57-59kW)	88-90		R	L	**CF062**	Bdx	Ø 20,64	CRCI
	88-90		R	L	**CF043**	Luc	Ø 20,64	CRCI
	88-90		R	R	**CF061**	Bdx	Ø 20,64	CRCI
	88-90		R	R	**CF042**	Luc	Ø 20,64	CRCI
	88-90				**PF008**	Ate	Ø 19,00	-ABS
1.4 (L532, L53A/P) Eng.C2J710/ 772	4/91-92		R	L	**CF061**	Bdx	Ø 20,64	CRCI
(43-44-46-49-50-51-52-53kW)	88-3/91		R	L	**CF062**	Bdx	Ø 20,64	CRCI
	88-92		R	L	**CF043**	Luc	Ø 20,64	CRCI
	4/91-92		R	R	**CF062**	Bdx	Ø 20,64	CRCI
	88-3/91		R	R	**CF061**	Bdx	Ø 20,64	CRCI
	88-92		R	R	**CF042**	Luc	Ø 20,64	CRCI

RENAULT

		Spare Parts	F/R	L/R	FRITECH ref.		DIMENSIONS mm.	NOTE
1.4 (L532, L53A/P) Eng.C2J710/ 772	88-3/91				**PF008**	Ate	Ø 19,00	-ABS
(43-44-46-49-50-51-52-53kW)	4/91-92				**PF007**	Ate	Ø 20,64	-ABS
	88-92				**PF211**	Bdx	Ø 20,64	+ABS
1.7 (L53B) Eng.F3N740/ 741 (55-66-70kW)	4/89-3/91		R	L	**CF062**	Bdx	Ø 20,64	CRCI
	4/91-92		R	L	**CF061**	Bdx	Ø 20,64	CRCI
	89-92		R	L	**CF043**	Luc	Ø 20,64	CRCI
	4/89-3/91		R	R	**CF061**	Bdx	Ø 20,64	CRCI
	4/91-92		R	R	**CF062**	Bdx	Ø 20,64	CRCI
	89-92		R	R	**CF042**	Luc	Ø 20,64	CRCI
	4/89-3/91				**PF008**	Ate	Ø 19,00	-ABS
	4/91-92				**PF007**	Ate	Ø 20,64	-ABS
	89-92				**PF211**	Bdx	Ø 20,64	+ABS
1.7 (L53C, F) Eng.F3N742/ 743/ 746	4/91-92		R	L	**CF061**	Bdx	Ø 20,64	CRCI
(55-66-70-79kW)	88-3/91		R	L	**CF062**	Bdx	Ø 20,64	CRCI
	88-92		R	L	**CF043**	Luc	Ø 20,64	CRCI
	4/91-92		R	R	**CF062**	Bdx	Ø 20,64	CRCI
	88-3/91		R	R	**CF061**	Bdx	Ø 20,64	CRCI
	88-92		R	R	**CF042**	Luc	Ø 20,64	CRCI
	88-3/91				**PF008**	Ate	Ø 19,00	-ABS
	4/91-92				**PF007**	Ate	Ø 20,64	-ABS
	88-92				**PF211**	Bdx	Ø 20,64	+ABS
1.8 16v (L53D) Eng.F7P704 (99-101kW)	89-92		R	L	**CF043**	Luc	Ø 20,64	CRCI
	89-92		R	R	**CF042**	Luc	Ø 20,64	CRCI
	89-92				**PF007**	Ate	Ø 20,64	-ABS
	89-92				**PF211**	Bdx	Ø 20,64	+ABS
1.9 D (L534, L53J) Eng.F8Q706/ 742 (47kW)	4/89-3/91		R	L	**CF062**	Bdx	Ø 20,64	CRCI
	4/91-92		R	L	**CF061**	Bdx	Ø 20,64	CRCI
	89-92		R	L	**CF043**	Luc	Ø 20,64	CRCI
	4/89-3/91		R	R	**CF061**	Bdx	Ø 20,64	CRCI
	4/91-92		R	R	**CF062**	Bdx	Ø 20,64	CRCI
	89-92		R	R	**CF042**	Luc	Ø 20,64	CRCI
	4/89-3/91				**PF008**	Ate	Ø 19,00	-ABS
	4/91-92				**PF007**	Ate	Ø 20,64	-ABS
	89-92				**PF211**	Bdx	Ø 20,64	+ABS
1.9 TD (L53K) Eng.F8Q740 (66-68kW)	4/91-92		R	L	**CF061**	Bdx	Ø 20,64	CRCI
	90-3/91		R	L	**CF062**	Bdx	Ø 20,64	CRCI
	90-92		R	L	**CF043**	Luc	Ø 20,64	CRCI
	4/91-92		R	R	**CF062**	Bdx	Ø 20,64	CRCI
	90-3/91		R	R	**CF061**	Bdx	Ø 20,64	CRCI
	90-92		R	R	**CF042**	Luc	Ø 20,64	CRCI
	90-3/91				**PF008**	Ate	Ø 19,00	-ABS
	4/91-92				**PF007**	Ate	Ø 20,64	-ABS
	90-92				**PF211**	Bdx	Ø 20,64	+ABS
R19 II (B/C53) 1/92-6/96								
1.2 (B/C530) Eng.C1G730 (40kW)	92-95		R	L	**CF061**	Bdx	Ø 20,64	CRCI
	92-95		R	L	**CF043**	Luc	Ø 20,64	CRCI
	92-95		R	R	**CF062**	Bdx	Ø 20,64	CRCI
	92-95		R	R	**CF042**	Luc	Ø 20,64	CRCI
	92-95				**PF007**	Ate	Ø 20,64	-ABS
1.2 (B/C53W) Eng.E7F700/ 706/ 730 (46kW)	92-95		R	L	**CF061**	Bdx	Ø 20,64	CRCI
	92-95		R	L	**CF043**	Luc	Ø 20,64	CRCI
	92-95		R	R	**CF062**	Bdx	Ø 20,64	CRCI
	92-95		R	R	**CF042**	Luc	Ø 20,64	CRCI
	92-95				**PF007**	Ate	Ø 20,64	-ABS
1.4 (B/C531/537) Eng.E7J700 (58kW)	92-95		R	L	**CF061**	Bdx	Ø 20,64	CRCI
	92-95		R	L	**CF043**	Luc	Ø 20,64	CRCI
	92-95		R	R	**CF062**	Bdx	Ø 20,64	CRCI
	92-95		R	R	**CF042**	Luc	Ø 20,64	CRCI
	92-95				**PF007**	Ate	Ø 20,64	-ABS
1.4 (B/C532) Eng.C3J710 (43kW)	92-95		R	L	**CF061**	Bdx	Ø 20,64	CRCI
	92-95		R	L	**CF043**	Luc	Ø 20,64	CRCI
	92-95		R	R	**CF062**	Bdx	Ø 20,64	CRCI
	92-95		R	R	**CF042**	Luc	Ø 20,64	CRCI
	92-95				**PF007**	Ate	Ø 20,64	-ABS

		Spare Parts	F/R	L/R	FRITECH ref.		DIMENSIONS mm.	NOTE
1.4 (B/C535) Eng.E7J742 (52-55kW)	92-95		R	L	**CF061**	Bdx	Ø 20,64	CRCI, -ABS
	92-95		R	L	**CF043**	Luc	Ø 20,64	CRCI, -ABS
	92-95		R	R	**CF062**	Bdx	Ø 20,64	CRCI, -ABS
	92-95		R	R	**CF042**	Luc	Ø 20,64	CRCI, -ABS
	92-95				**PF007**	Ate	Ø 20,64	-ABS
	92-95				**PF131**	Bdx	Ø 20,64	+ABS
1.4 (B/C53A,G) Eng.E6J700/ 701/ 706 (59-60kW)	92-95		R	L	**CF061**	Bdx	Ø 20,64	CRCI
	92-95		R	L	**CF043**	Luc	Ø 20,64	CRCI
	92-95		R	R	**CF062**	Bdx	Ø 20,64	CRCI
	92-95		R	R	**CF042**	Luc	Ø 20,64	CRCI
	92-95				**PF007**	Ate	Ø 20,64	-ABS
	92-95				**PF211**	Bdx	Ø 20,64	+ABS
1.4 (B/C53H,B) Eng.C3J710 (43kW)	92-95		R	L	**CF043**	Luc	Ø 20,64	CRCI
	92-95		R	R	**CF042**	Luc	Ø 20,64	CRCI
	92-95				**PF008**	Ate	Ø 19,00	-ABS
1.7 (B/C533) Eng.F3N742/ 747 (68-69kW)	92-95		R	L	**CF061**	Bdx	Ø 20,64	CRCI
	92-95		R	L	**CF043**	Luc	Ø 20,64	CRCI
	92-95		R	R	**CF062**	Bdx	Ø 20,64	CRCI
	92-95		R	R	**CF042**	Luc	Ø 20,64	CRCI
	92-95				**PF007**	Ate	Ø 20,64	-ABS
	92-95				**PF211**	Bdx	Ø 20,64	+ABS
1.7 (B/C53B, C) Eng.F3N740/ 741 (55-66-70kW)	92-95		R	L	**CF061**	Bdx	Ø 20,64	CRCI
	92-95		R	L	**CF043**	Luc	Ø 20,64	CRCI
	92-95		R	R	**CF062**	Bdx	Ø 20,64	CRCI
	92-95		R	R	**CF042**	Luc	Ø 20,64	CRCI
	92-95				**PF007**	Ate	Ø 20,64	-ABS
	92-95				**PF211**	Bdx	Ø 20,64	+ABS
1.7 (B/C53F) Eng.F3N742/ 743 (55-66-70kW)	92-95		R	L	**CF092**	Bdx	Ø 19,05	
	92-95		R	R	**CF093**	Bdx	Ø 19,05	
	92-95				**PF008**	Ate	Ø 19,00	Driving school, -ABS
	92-95				**PF007**	Ate	Ø 20,64	Exc. Driving School, -ABS
	92-95				**PF131**	Bdx	Ø 20,64	+ABS
1.7 (B536/E, B53M) Eng.F3N740/ 741 (55-66-70kW)	92-95		R	L	**CF043**	Luc	Ø 20,64	CRCI
	92-95		R	R	**CF042**	Luc	Ø 20,64	CRCI
	92-95				**PF008**	Ate	Ø 19,00	-ABS
1.8 (5/853/353A) Eng.F3P706/ 760 (65-66-70-80-81kW)	92-96		R	L	**CF061**	Bdx	Ø 20,64	CRCI
	92-96		R	L	**CF043**	Luc	Ø 20,64	CRCI
	92-96		R	R	**CF062**	Bdx	Ø 20,64	CRCI
	92-96		R	R	**CF042**	Luc	Ø 20,64	CRCI
	92-96				**PF007**	Ate	Ø 20,64	-ABS
	92-96				**PF131**	Bdx	Ø 20,64	+ABS
1.8 (5/853/353F, B/C538) Eng.F3P682/ 764/ 765 (65-66-70-80-81kW)	94-96		R	L	**CF061**	Bdx	Ø 20,64	CRCI
	94-96		R	L	**CF043**	Luc	Ø 20,64	CRCI
	94-96		R	R	**CF062**	Bdx	Ø 20,64	CRCI
	94-96		R	R	**CF042**	Luc	Ø 20,64	CRCI
	94-96				**PF007**	Ate	Ø 20,64	-ABS
	94-96				**PF131**	Bdx	Ø 20,64	+ABS
1.8 (B/C538) Eng.F3P700 (65-66-70-80-81kW)	92-94		R	L	**CF092**	Bdx	Ø 19,05	
	92-94		R	R	**CF093**	Bdx	Ø 19,05	
	92-94				**PF007**	Ate	Ø 20,64	-ABS
	92-94				**PF211**	Bdx	Ø 20,64	+ABS
1.8 (B/C53Y) Eng.F3P704/ 705/ 706/ 707/ 708/ 760 (65-66-70-80-81kW)	92-96		R	L	**CF061**	Bdx	Ø 20,64	CRCI
	92-96		R	L	**CF043**	Luc	Ø 20,64	CRCI
	92-96		R	R	**CF062**	Bdx	Ø 20,64	CRCI
	92-96		R	R	**CF042**	Luc	Ø 20,64	CRCI
	92-96				**PF007**	Ate	Ø 20,64	-ABS
	92-96				**PF211**	Bdx	Ø 20,64	+ABS
1.8 16v (B/C53D) Eng.F7P704 (99-101kW)	92-96				**PF007**	Ate	Ø 20,64	-ABS
	92-96				**PF131**	Bdx	Ø 20,64	+ABS
1.9 D (B/C53I/J) Eng.F8Q742 (47-66-68kW)	92-95		R	L	**CF061**	Bdx	Ø 20,64	CRCI
	92-95		R	L	**CF043**	Luc	Ø 20,64	CRCI
	92-95		R	R	**CF062**	Bdx	Ø 20,64	CRCI
	92-95		R	R	**CF042**	Luc	Ø 20,64	CRCI
	92-95				**PF007**	Ate	Ø 20,64	-ABS

RENAULT

		Spare Parts	F/R	L/R	FRITECH ref.		DIMENSIONS mm.	NOTE
1.9 D (B/C53I/J) Eng.F8Q742 (47-66-68kW)	92-95				**PF211**	Bdx	Ø 20,64	+ABS
1.9 DT (B/C53K) Eng.F8Q744 (47-66-68kW)	92-95		R	L	**CF092**	Bdx	Ø 19,05	
	92-95		R	R	**CF093**	Bdx	Ø 19,05	
	92-95				**PF008**	Ate	Ø 19,00	-ABS
1.9 DT (B/C53T) Eng.F8Q744 (47-66-68kW)	92-95		R	L	**CF092**	Bdx	Ø 19,05	
	92-95		R	R	**CF093**	Bdx	Ø 19,05	
	92-95				**PF007**	Ate	Ø 20,64	-ABS
R19 II (D53) Cabrio 4/92-6/96								
1.7 (D53F) Eng.F3N742/ 743 (55-66-70kW)	92-95		R	L	**CF092**	Bdx	Ø 19,05	
	92-95		R	R	**CF093**	Bdx	Ø 19,05	
	92-95				**PF007**	Ate	Ø 20,64	
1.8 (853A, D53Y) Eng.F3P704/ 705/ 706/ 707/ 708/	92-96		R	L	**CF061**	Bdx	Ø 20,64	CRCI
760 (65-66-70-80-81kW)	92-96		R	L	**CF043**	Luc	Ø 20,64	CRCI
	92-96		R	R	**CF062**	Bdx	Ø 20,64	CRCI
	92-96		R	R	**CF042**	Luc	Ø 20,64	CRCI
	92-96				**PF007**	Ate	Ø 20,64	-ABS
	92-96				**PF211**	Bdx	Ø 20,64	+ABS
R19 II (L53) Chamade 1/92-12/95								
1.2 (L530) Eng.C1G730 (40kW)	92-95		R	L	**CF061**	Bdx	Ø 20,64	CRCI
	92-95		R	L	**CF043**	Luc	Ø 20,64	CRCI
	92-95		R	R	**CF062**	Bdx	Ø 20,64	CRCI
	92-95		R	R	**CF042**	Luc	Ø 20,64	CRCI
	92-95				**PF007**	Ate	Ø 20,64	-ABS
1.2 (L53W) Eng.E7F700/ 706/ 730 (46kW)	92-95		R	L	**CF061**	Bdx	Ø 20,64	CRCI
	92-95		R	L	**CF043**	Luc	Ø 20,64	CRCI
	92-95		R	R	**CF062**	Bdx	Ø 20,64	CRCI
	92-95		R	R	**CF042**	Luc	Ø 20,64	CRCI
	92-95				**PF007**	Ate	Ø 20,64	-ABS
1.4 (L532/531) Eng.C3J710 (43kW)	92-95		R	L	**CF061**	Bdx	Ø 20,64	CRCI
	92-95		R	L	**CF043**	Luc	Ø 20,64	CRCI
	92-95		R	R	**CF062**	Bdx	Ø 20,64	CRCI
	92-95		R	R	**CF042**	Luc	Ø 20,64	CRCI
	92-95				**PF007**	Ate	Ø 20,64	-ABS
1.4 (L535) Eng.E7J742 (52-55-57kW)	93-95		R	L	**CF061**	Bdx	Ø 20,64	CRCI, -ABS
	93-95		R	L	**CF043**	Luc	Ø 20,64	CRCI, -ABS
	93-95		R	R	**CF062**	Bdx	Ø 20,64	CRCI, -ABS
	93-95		R	R	**CF042**	Luc	Ø 20,64	CRCI, -ABS
	93-95				**PF007**	Ate	Ø 20,64	-ABS
	93-95				**PF131**	Bdx	Ø 20,64	+ABS
1.4 (L53A,G) Eng.E6J700/ 701 (59kW)	92-95		R	L	**CF061**	Bdx	Ø 20,64	CRCI
	92-95		R	L	**CF043**	Luc	Ø 20,64	CRCI
	92-95		R	R	**CF062**	Bdx	Ø 20,64	CRCI
	92-95		R	R	**CF042**	Luc	Ø 20,64	CRCI
	92-95				**PF007**	Ate	Ø 20,64	-ABS
	92-95				**PF211**	Bdx	Ø 20,64	+ABS
1.7 (L533) Eng.F3N742/ 743 (55-68-70kW)	92-95		R	L	**CF061**	Bdx	Ø 20,64	CRCI
	92-95		R	L	**CF043**	Luc	Ø 20,64	CRCI
	92-95		R	R	**CF062**	Bdx	Ø 20,64	CRCI
	92-95		R	R	**CF042**	Luc	Ø 20,64	CRCI
	92-95				**PF007**	Ate	Ø 20,64	-ABS
	92-95				**PF211**	Bdx	Ø 20,64	+ABS
1.7 (L53B) Eng.F3N740/ 741 (55-66-70kW)	92-95		R	L	**CF061**	Bdx	Ø 20,64	CRCI
	92-95		R	L	**CF043**	Luc	Ø 20,64	CRCI
	92-95		R	R	**CF062**	Bdx	Ø 20,64	CRCI
	92-95		R	R	**CF042**	Luc	Ø 20,64	CRCI
	92-95				**PF007**	Ate	Ø 20,64	-ABS
	92-95				**PF211**	Bdx	Ø 20,64	+ABS
1.7 (L53C, F) Eng.F3N742/ 743 (55-66-70kW)	92-95		R	L	**CF092**	Bdx	Ø 19,05	
	92-95		R	R	**CF093**	Bdx	Ø 19,05	
	92-95				**PF007**	Ate	Ø 20,64	-ABS
1.8 (L453A/F) Eng.F3P706/ 760	92-95		R	L	**CF061**	Bdx	Ø 20,64	CRCI
(65-66-70-80-81kW)	92-95		R	L	**CF043**	Luc	Ø 20,64	CRCI
	92-95		R	R	**CF062**	Bdx	Ø 20,64	CRCI
	92-95		R	R	**CF042**	Luc	Ø 20,64	CRCI

		Spare Parts	F/R	L/R	FRITECH ref.		DIMENSIONS mm.	NOTE
1.8 (L453A/F) Eng.F3P706/ 760	92-95				**PF007**	Ate	Ø 20,64	-ABS
(65-66-70-80-81kW)	92-95				**PF131**	Bdx	Ø 20,64	+ABS
1.8 (L538) Eng.F3P700 (65-66-70-80-81kW)	92-94		R	L	**CF092**	Bdx	Ø 19,05	
	92-94		R	R	**CF093**	Bdx	Ø 19,05	
	92-94				**PF007**	Ate	Ø 20,64	-ABS
1.8 (L53V, L538) Eng.F3P682/ 764/ 765	94-95		R	L	**CF061**	Bdx	Ø 20,64	CRCI
(65-66-70-80-81kW)	94-95		R	L	**CF043**	Luc	Ø 20,64	CRCI
	94-95		R	R	**CF062**	Bdx	Ø 20,64	CRCI
	94-95		R	R	**CF042**	Luc	Ø 20,64	CRCI
	94-95				**PF007**	Ate	Ø 20,64	-ABS
	94-95				**PF131**	Bdx	Ø 20,64	+ABS
1.8 (L53Y) Eng.F3P704/ 705/ 706/ 707/ 708/ 760	92-95		R	L	**CF061**	Bdx	Ø 20,64	CRCI
(65kW)	92-95		R	L	**CF043**	Luc	Ø 20,64	CRCI
	92-95		R	R	**CF062**	Bdx	Ø 20,64	CRCI
	92-95		R	R	**CF042**	Luc	Ø 20,64	CRCI
	92-95				**PF007**	Ate	Ø 20,64	-ABS
	92-95				**PF211**	Bdx	Ø 20,64	+ABS
1.8 16v (L53D) Eng.F7P704 (99-101kW)	92-95				**PF007**	Ate	Ø 20,64	-ABS
	92-95				**PF131**	Bdx	Ø 20,64	+ABS
1.9 D (L53J) Eng.F8Q742 (47-66-68kW)	92-95		R	L	**CF061**	Bdx	Ø 20,64	CRCI
	92-95		R	L	**CF043**	Luc	Ø 20,64	CRCI
	92-95		R	R	**CF062**	Bdx	Ø 20,64	CRCI
	92-95		R	R	**CF042**	Luc	Ø 20,64	CRCI
	92-95				**PF007**	Ate	Ø 20,64	-ABS
	92-95				**PF211**	Bdx	Ø 20,64	+ABS
1.9 DT (L53K) Eng.F8Q744 (68kW)	92-95		R	L	**CF092**	Bdx	Ø 19,05	
	92-95		R	R	**CF093**	Bdx	Ø 19,05	
	92-95				**PF007**	Ate	Ø 20,64	-ABS
1.9 DT (L53T) Eng.F8Q744 (47-66-68kW)	92-95		R	L	**CF092**	Bdx	Ø 19,05	
	92-95		R	R	**CF093**	Bdx	Ø 19,05	
	92-95				**PF007**	Ate	Ø 20,64	-ABS
R20 (127) 10/75-12/83								
1.6 (1271) Eng.843720/ 721 (66-68-71kW)	75-83		R	L	**CF037**	Bdx	Ø 22,00	
	75-83		R	L	**CF039**	Luc	Ø 22,22	
	75-83		R	R	**CF038**	Bdx	Ø 22,00	
	75-83		R	R	**CF040**	Luc	Ø 22,22	
2.0 (1272) Eng.829700/ 701 (59-63-76-80-81kW)	77-80		R	L	**CF037**	Bdx	Ø 22,00	Sweden
	77-80		R	L	**CF039**	Luc	Ø 22,22	Sweden
	77-80		R	R	**CF038**	Bdx	Ø 22,00	Sweden
	77-80		R	R	**CF040**	Luc	Ø 22,22	Sweden
	77-80				**PF171**		Ø 20,64	Sweden, -ABS
2.0 (1277) Eng.829702/ 703 (59-63-76-80-81kW)	80-83		R	L	**CF037**	Bdx	Ø 22,00	
	80-83		R	L	**CF039**	Luc	Ø 22,22	
	80-83		R	R	**CF038**	Bdx	Ø 22,00	
	80-83		R	R	**CF040**	Luc	Ø 22,22	
	80-83				**PF171**		Ø 20,64	-ABS
2.1 D (1276) Eng.852710 (43-46-50kW)	80-83		R	L	**CF037**	Bdx	Ø 22,00	
	80-83		R	L	**CF039**	Luc	Ø 22,22	
	80-83		R	R	**CF038**	Bdx	Ø 22,00	
	80-83		R	R	**CF040**	Luc	Ø 22,22	
	80-83				**PF171**		Ø 20,64	-ABS
2.1 TD (1270) Eng.J8S702 (63kW)	82-83		R	L	**CF037**	Bdx	Ø 22,00	
	82-83		R	L	**CF039**	Luc	Ø 22,22	
	82-83		R	R	**CF038**	Bdx	Ø 22,00	
	82-83		R	R	**CF040**	Luc	Ø 22,22	
	82-83				**PF171**		Ø 20,64	-ABS
2.2 (1279) Eng.851700	80-83		R	L	**CF037**	Bdx	Ø 22,00	
(67-70-74-76-79-85-89-91-101kW)	80-83		R	L	**CF039**	Luc	Ø 22,22	
	80-83		R	R	**CF038**	Bdx	Ø 22,00	
	80-83		R	R	**CF040**	Luc	Ø 22,22	
R21 (B48) 3/86-6/94								
1.4 (B48D) Eng.C2J770 (43-46-50-53kW)			R	L	**CF065**	Bdx	Ø 22,00	Ch S00006091-, CRCI
	6/89-		R	L	**CF032**	Bdx	Ø 22,00	CRCI
			R	R	**CF066**	Bdx	Ø 22,00	Ch S00006091-, CRCI

RENAULT

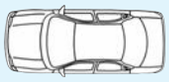		Spare Parts	F/R	L/R	FRITECH ref.		DIMENSIONS mm.	NOTE
1.4 (B48D) Eng.C2J770 (43-46-50-53kW)	6/89-		R	R	**CF033**	Bdx	Ø 22,00	CRCI
	6/89-				**PF008**	Ate	Ø 19,00	-ABS
1.4 (B48U) Eng.C2J770 (50kW)	6/89-		R	L	**CF032**	Bdx	Ø 22,00	CRCI
	90-92		R	L	**CF017**	Bdx	Ø 22,00	
	6/89-		R	R	**CF033**	Bdx	Ø 22,00	CRCI
	90-92		R	R	**CF016**	Bdx	Ø 22,00	
	90-92				**PF170**	Ate	Ø 20,64	-ABS
1.7 (B481,484) Eng.F2N712 (55-59-64-68kW)			R	L	**CF065**	Bdx	Ø 22,00	Ch S00000050-, CRCI
	86-		R	L	**CF032**	Bdx	Ø 22,00	CRCI
	86-87		R	L	**CF017**	Bdx	Ø 22,00	
			R	R	**CF066**	Bdx	Ø 22,00	Ch S00000050-, CRCI
	86-		R	R	**CF033**	Bdx	Ø 22,00	CRCI
	86-87		R	R	**CF016**	Bdx	Ø 22,00	
	86-94				**PF008**	Ate	Ø 19,00	-ABS
1.7 (B482) Eng.F2N712/ 716 (55kW)			R	L	**CF065**	Bdx	Ø 22,00	Ch S00060305-, CRCI, Exc. Spain
	86-		R	L	**CF032**	Bdx	Ø 22,00	CRCI, Exc. Spain
	90-92		R	L	**CF017**	Bdx	Ø 22,00	Spain
			R	R	**CF066**	Bdx	Ø 22,00	Ch S00060305-, CRCI, Exc. Spain
	86-		R	R	**CF033**	Bdx	Ø 22,00	CRCI, Exc. Spain
	90-92		R	R	**CF016**	Bdx	Ø 22,00	Spain
	86-94				**PF008**	Ate	Ø 19,00	Exc. Spain, -ABS
	90-92				**PF170**	Ate	Ø 20,64	Spain, -ABS
1.7 (B48A,F,P) Eng.F2N750/ F3N726 (54kW)	-94		R	L	**CF065**	Bdx	Ø 22,00	Ch S00006358-, CRCI
	86-87		R	L	**CF017**	Bdx	Ø 22,00	
	87-		R	L	**CF032**	Bdx	Ø 22,00	CRCI
	91-94		R	L	**CF021**	Luc	Ø 22,20	
	-94		R	R	**CF066**	Bdx	Ø 22,00	Ch S00006358-, CRCI
	86-87		R	R	**CF016**	Bdx	Ø 22,00	
	87-		R	R	**CF033**	Bdx	Ø 22,00	CRCI
	91-94		R	R	**CF022**	Luc	Ø 22,20	
	86-91				**PF008**	Ate	Ø 19,00	-ABS
	6/91-				**PF170**	Ate	Ø 20,64	-ABS
1.7 (B48E) Eng.F3N722/ 723 (66-69kW)			R	L	**CF065**	Bdx	Ø 22,00	Ch S00006734-, CRCI
	86-		R	L	**CF032**	Bdx	Ø 22,00	CRCI
	86-87		R	L	**CF017**	Bdx	Ø 22,00	
			R	R	**CF066**	Bdx	Ø 22,00	Ch S00006734-, CRCI
	86-		R	R	**CF033**	Bdx	Ø 22,00	CRCI
	86-87		R	R	**CF016**	Bdx	Ø 22,00	
	89-				**PF008**	Ate	Ø 19,00	-ABS
1.9 D (B48H/I) Eng.F8Q710 (47kW)			R	L	**CF065**	Bdx	Ø 22,00	Ch S00005584-, CRCI
	89-		R	L	**CF032**	Bdx	Ø 22,00	CRCI
			R	R	**CF066**	Bdx	Ø 22,00	Ch S00005584-, CRCI
	89-		R	R	**CF033**	Bdx	Ø 22,00	CRCI
	89-93				**PF008**	Ate	Ø 19,00	-ABS
2.0 (B483) Eng.J7R750 (86kW)	6/89-93		R	L	**CF021**	Luc	Ø 22,20	
	6/89-93		R	R	**CF022**	Luc	Ø 22,20	
	6/89-93				**PF170**	Ate	Ø 20,64	-ABS, RHD
	6/89-93				**PF221**	Ate	Ø 22,20	-ABS, LHD
2.0 (B48C) Eng.J7R746/ 747 (88kW)	90-93		R	L	**CF021**	Luc	Ø 22,20	
	90-93		R	R	**CF022**	Luc	Ø 22,20	
	90-93				**PF170**	Ate	Ø 20,64	-ABS, RHD
2.0 (B48J) Eng.F2R702 (64kW)			R	L	**CF065**	Bdx	Ø 22,00	Ch S00006358-, CRCI
	86-87		R	L	**CF017**	Bdx	Ø 22,00	
	89-		R	L	**CF032**	Bdx	Ø 22,00	CRCI
			R	R	**CF066**	Bdx	Ø 22,00	Ch S00006358-, CRCI
	86-87		R	R	**CF016**	Bdx	Ø 22,00	
	89-		R	R	**CF033**	Bdx	Ø 22,00	CRCI
	86-93				**PF008**	Ate	Ø 19,00	-ABS
2.0, 4WD (B48Y/R) Eng.J7R740 (99kW)	89-94				**PF221**	Ate	Ø 22,20	-ABS
2.1 D (B480) Eng.J8S784 (43-46-50-53kW)	92-94		R	L	**CF032**	Bdx	Ø 22,00	CRCI
	92-94		R	L	**CF065**	Bdx	Ø 22,00	CRCI
	92-94		R	R	**CF033**	Bdx	Ø 22,00	CRCI
	92-94		R	R	**CF066**	Bdx	Ø 22,00	CRCI
	92-94				**PF170**	Ate	Ø 20,64	-ABS

		Spare Parts	F/R	L/R	FRITECH ref.		DIMENSIONS mm.	NOTE
2.1 D (B48V, B48O) Eng.J8S600/ 740			R	L	**CF065**	Bdx	Ø 22,00	Ch S00006101-, CRCI
(44-48-53-66kW)	5/89-		R	L	**CF032**	Bdx	Ø 22,00	CRCI
			R	R	**CF066**	Bdx	Ø 22,00	Ch S00006101-, CRCI
	5/89-		R	R	**CF033**	Bdx	Ø 22,00	CRCI
	89-94				**PF170**	Ate	Ø 20,64	-ABS
2.1 TD (B486/B488/B48V) Eng.J8S714/ 786/ 788	4/91-94		R	L	**CF065**	Bdx	Ø 22,00	CRCI, Only Mod. B486
(65kW)	6/87-3/91		R	L	**CF032**	Bdx	Ø 22,00	CRCI, Only Mod. B486
	7/86-5/87		R	L	**CF017**	Bdx	Ø 22,00	Spain, Only Mod. B486
	6/89-94		R	L	**CF021**	Luc	Ø 22,20	Only Mod. B488/B48V
	4/91-94		R	R	**CF066**	Bdx	Ø 22,00	CRCI, Only Mod. B486
	6/87-3/91		R	R	**CF033**	Bdx	Ø 22,00	CRCI, Only Mod. B486
	7/86-5/87		R	R	**CF016**	Bdx	Ø 22,00	Spain, Only Mod. B486
	6/89-94		R	R	**CF022**	Luc	Ø 22,20	Only Mod. B488/B48V
	6/89-94				**PF170**	Ate	Ø 20,64	-ABS, RHD
	6/89-94				**PF221**	Ate	Ø 22,20	-ABS
2.2, 4WD (B48K) Eng.J7T754 (79kW)	86-94		R	L	**CF021**	Luc	Ø 22,20	
	86-94		R	R	**CF022**	Luc	Ø 22,20	
	86-5/90				**PF170**	Ate	Ø 20,64	-ABS, RHD
	90-94				**PF221**	Ate	Ø 22,20	-ABS, LHD
R21 (K48) Nevada 3/86-9/95								
1.7 (K481) Eng.F2N712 (55kW)	86-93		R	L	**CF032**	Bdx	Ø 22,00	Ch -S00006089, CRCI
	86-93		R	R	**CF033**	Bdx	Ø 22,00	Ch -S00006089, CRCI
1.7 (K482) Eng.F2N710 (65kW)	86-88		R	L	**CF032**	Bdx	Ø 22,00	Ch -S00006089, CRCI
	86-		R	L	**CF021**	Luc	Ø 22,20	
	86-88		R	R	**CF033**	Bdx	Ø 22,00	Ch -S00006089, CRCI
	86-		R	R	**CF022**	Luc	Ø 22,20	
	86-				**PF008**	Ate	Ø 19,00	-ABS
	86-				**PF170**	Ate	Ø 20,64	-ABS
1.7 (K48E) Eng.F3N722/ 723 (66-69kW)	86-93		R	L	**CF032**	Bdx	Ø 22,00	Ch -S00006089, CRCI
	86-93		R	R	**CF033**	Bdx	Ø 22,00	Ch -S00006089, CRCI
1.7 (K48F) Kat Eng.F3N726 (54kW)	88-93		R	L	**CF032**	Bdx	Ø 22,00	Ch -S00006089, CRCI
	88-93		R	R	**CF033**	Bdx	Ø 22,00	Ch -S00006089, CRCI
1.7 (K48M) Eng.F2N750 (54kW)	86-89		R	L	**CF032**	Bdx	Ø 22,00	Ch -S00006089, CRCI
	86-89		R	R	**CF033**	Bdx	Ø 22,00	Ch -S00006089, CRCI
1.7 (K48N) Eng.F2N752 (64kW)	87-89		R	L	**CF032**	Bdx	Ø 22,00	Ch -S00006089, CRCI
	87-89		R	R	**CF033**	Bdx	Ø 22,00	Ch -S00006089, CRCI
1.9 D (K48H/I) Eng.F8Q710 (47kW)	86-94		R	L	**CF032**	Bdx	Ø 22,00	Ch -S00006089, CRCI
	86-94		R	R	**CF033**	Bdx	Ø 22,00	Ch -S00006089, CRCI
2.0 (K483) Eng.J7R750/ 751 (85kW)	86-88		R	L	**CF021**	Luc	Ø 22,20	
	86-88		R	R	**CF022**	Luc	Ø 22,20	
	86-88				**PF008**	Ate	Ø 19,00	-ABS
	86-88				**PF170**	Ate	Ø 20,64	-ABS, RHD
2.0 (K489) Eng.J6R758/ 759/ 792/ 793	86-4/89		R	L	**CF021**	Luc	Ø 22,20	
(74-77-81kW)	86-4/89		R	R	**CF022**	Luc	Ø 22,20	
	86-4/89				**PF170**	Ate	Ø 20,64	-ABS
2.0 (K48R/Y) Eng.J7R740 (99kW)	90-94		R	L	**CF021**	Luc	Ø 22,20	
	90-94		R	R	**CF022**	Luc	Ø 22,20	
	90-94				**PF008**	Ate	Ø 19,00	-ABS
	90-94				**PF170**	Ate	Ø 20,64	-ABS, RHD
2.0, 4WD (K48C) Eng.J7R746/ 747 (88kW)	86-93		R		**CF531**	Bdx	Ø 20,64	4WD
	86-93				**PF170**	Ate	Ø 20,64	Incl. 4x4, -ABS, RHD
2.1 D (K480) Eng.J8S784 (44-48-53-66kW)	92-95		R	L	**CF032**	Bdx	Ø 22,00	Ch -S00006089, CRCI
	92-95		R	L	**CF021**	Luc	Ø 22,20	
	92-95		R	R	**CF033**	Bdx	Ø 22,00	Ch -S00006089, CRCI
	92-95		R	R	**CF022**	Luc	Ø 22,20	
	92-95				**PF221**	Ate	Ø 22,20	-ABS
2.1 D (K48V,O) Eng.J8S600/ 740 (44-48-53-66kW)	89-92		R	L	**CF032**	Bdx	Ø 22,00	Ch -S00006089, CRCI
	89-92		R	L	**CF021**	Luc	Ø 22,20	
	89-92		R	R	**CF033**	Bdx	Ø 22,00	Ch -S00006089, CRCI
	89-92		R	R	**CF022**	Luc	Ø 22,20	
	89-92				**PF221**	Ate	Ø 22,20	-ABS
2.1 D, 4WD (K486) Eng.J8S704 (48kW)	86-92		R	L	**CF032**	Bdx	Ø 22,00	Ch -S00006089, CRCI
	86-92		R	L	**CF021**	Luc	Ø 22,20	
	86-92		R	R	**CF033**	Bdx	Ø 22,00	Ch -S00006089, CRCI

RENAULT

		Spare Parts	F/R	L/R	FRITECH ref.		DIMENSIONS mm.	NOTE
2.1 D, 4WD (K486) Eng.J8S704 (48kW)	86-92		R	R	**CF022**	Luc	Ø 22,20	
	86-92		R		**CF531**	Bdx	Ø 20,64	4WD
	86-92				**PF008**	Ate	Ø 19,00	-ABS
	86-4/89				**PF170**	Ate	Ø 20,64	Incl. 4x4, -ABS, RHD
	5/89-92				**PF221**	Ate	Ø 22,20	-ABS
2.1 TD (K488) Eng.J8S788 (65kW)	86-93		R	L	**CF032**	Bdx	Ø 22,00	Ch -S00006089, CRCI
	86-93		R	L	**CF021**	Luc	Ø 22,20	
	86-93		R	R	**CF033**	Bdx	Ø 22,00	Ch -S00006089, CRCI
	86-93		R	R	**CF022**	Luc	Ø 22,20	
	86-93				**PF008**	Ate	Ø 19,00	-ABS
	90-93				**PF170**	Ate	Ø 20,64	-ABS
	89-93				**PF221**	Ate	Ø 22,20	-ABS
2.1 TD (K48A/P/W, K487) Eng.J8S714/ 786 (65kW)	86-93		R	L	**CF032**	Bdx	Ø 22,00	Ch -S00006089, CRCI
	86-93		R	L	**CF021**	Luc	Ø 22,20	
	86-93		R	R	**CF033**	Bdx	Ø 22,00	Ch -S00006089, CRCI
	86-93		R	R	**CF022**	Luc	Ø 22,20	
	86-93				**PF008**	Ate	Ø 19,00	-ABS
	86-93				**PF170**	Ate	Ø 20,64	-ABS
	86-93				**PF221**	Ate	Ø 22,20	-ABS
2.2 (K48B) Eng.J7T754/ 755 (79kW)	86-93		R	L	**CF021**	Luc	Ø 22,20	
	86-93		R	R	**CF022**	Luc	Ø 22,20	
	86-93				**PF008**	Ate	Ø 19,00	-ABS
	86-93				**PF221**	Ate	Ø 22,20	-ABS
2.2 (K48C) Eng.J7T754/ 755 (79kW)	86-93		R	L	**CF021**	Luc	Ø 22,20	
	86-93		R	R	**CF022**	Luc	Ø 22,20	
	86-93				**PF008**	Ate	Ø 19,00	-ABS
	86-93				**PF170**	Ate	Ø 20,64	-ABS
2.2, 4WD (K48K) Eng.J7T754/ 755 (79kW)	86-93		R	L	**CF021**	Luc	Ø 22,20	
	86-93		R	R	**CF022**	Luc	Ø 22,20	
	86-93		R		**CF531**	Bdx	Ø 20,64	4WD
	86-93				**PF008**	Ate	Ø 19,00	-ABS
	86-4/89				**PF170**	Ate	Ø 20,64	Incl. 4x4, -ABS, RHD
	5/89-93				**PF221**	Ate	Ø 22,20	-ABS
R21 (L48) 3/86-6/94								
1.4 (L48D) Eng.C2J770 (43-46-50-53kW)	4/91-		R	L	**CF065**	Bdx	Ø 22,00	CRCI
	88-3/91		R	L	**CF032**	Bdx	Ø 22,00	CRCI
	4/91-		R	R	**CF066**	Bdx	Ø 22,00	CRCI
	88-3/91		R	R	**CF033**	Bdx	Ø 22,00	CRCI
	88-93				**PF008**	Ate	Ø 19,00	-ABS
1.4 (L48U) Eng.C2J770 (50kW)	4/91-		R	L	**CF065**	Bdx	Ø 22,00	CRCI
	6/88-3/91		R	L	**CF021**	Luc	Ø 22,20	
	4/91-		R	R	**CF066**	Bdx	Ø 22,00	CRCI
	6/88-3/91		R	R	**CF022**	Luc	Ø 22,20	
	6/88-3/91				**PF008**	Ate	Ø 19,00	-ABS
	4/91-				**PF170**	Ate	Ø 20,64	-ABS
1.7 (L482) Eng.F2N710 (65kW)	3/86-5/87		R	L	**CF017**	Bdx	Ø 22,00	
	6/87-5/90		R	L	**CF032**	Bdx	Ø 22,00	CRCI
	3/86-5/87		R	R	**CF016**	Bdx	Ø 22,00	
	6/87-5/90		R	R	**CF033**	Bdx	Ø 22,00	CRCI
	3/86-5/87				**PF008**	Ate	Ø 19,00	Exc. Spain, -ABS
	3/86-5/87				**PF170**	Ate	Ø 20,64	Spain, -ABS
1.7 (L484) Eng.F2N710 (65kW)	6/90-5/92		R	L	**CF032**	Bdx	Ø 22,00	CRCI
	6/92-		R	L	**CF065**	Bdx	Ø 22,00	CRCI
	6/92-		R	L	**CF021**	Luc	Ø 22,20	
	6/90-5/92		R	R	**CF033**	Bdx	Ø 22,00	CRCI
	6/92-		R	R	**CF066**	Bdx	Ø 22,00	CRCI
	6/92-		R	R	**CF022**	Luc	Ø 22,20	
	6/90-5/92				**PF008**	Ate	Ø 19,00	-ABS
	6/92-				**PF170**	Ate	Ø 20,64	-ABS
1.7 (L48A/P/F) Eng.F2N750/ F3N726 (54kW)	87-		R	L	**CF032**	Bdx	Ø 22,00	Ch -S00006357, CRCI
	-94		R	L	**CF065**	Bdx	Ø 22,00	Ch S00006358-, CRCI
	86-87		R	L	**CF017**	Bdx	Ø 22,00	
	6/91-		R	L	**CF021**	Luc	Ø 22,20	
	87-		R	R	**CF033**	Bdx	Ø 22,00	Ch -S00006357, CRCI

		Spare Parts	F/R	L/R	FRITECH ref.		DIMENSIONS mm.	NOTE
1.7 (L48A/P/F) Eng.F2N750/ F3N726 (54kW)	-94		R	R	**CF066**	Bdx	Ø 22,00	Ch S00006358-, CRCI
	86-87		R	R	**CF016**	Bdx	Ø 22,00	
	6/91-		R	R	**CF022**	Luc	Ø 22,20	
	86-91				**PF008**	Ate	Ø 19,00	-ABS
	6/91-				**PF170**	Ate	Ø 20,64	-ABS
1.7 (L48M/N) Eng.F2N752 (44kW)	87-89		R	L	**CF032**	Bdx	Ø 22,00	CRCI, Germany/Benelux
	87-89		R	R	**CF033**	Bdx	Ø 22,00	CRCI, Germany/Benelux
	87-89				**PF008**	Ate	Ø 19,00	Germany/Benelux, -ABS
1.9 D (L48I/H) Eng.F8Q710 (47kW)	4/92-93		R	L	**CF065**	Bdx	Ø 22,00	CRCI
	89-4/92		R	L	**CF032**	Bdx	Ø 22,00	CRCI
	4/92-93		R	R	**CF066**	Bdx	Ø 22,00	CRCI
	89-4/92		R	R	**CF033**	Bdx	Ø 22,00	CRCI
	89-93				**PF008**	Ate	Ø 19,00	-ABS
2.0 (L483) Eng.J7R750/ 751 (85kW)	6/89-12/95		R	L	**CF021**	Luc	Ø 22,20	
	6/89-12/95		R	R	**CF022**	Luc	Ø 22,20	
	6/89-12/95				**PF170**	Ate	Ø 20,64	-ABS, RHD
	6/89-12/95				**PF221**	Ate	Ø 22,20	-ABS, LHD
2.0 (L489) Eng.J6R758/ 759/ 792/ 793 (75kW)	86-4/89		R	L	**CF021**	Luc	Ø 22,20	
	86-4/89		R	R	**CF022**	Luc	Ø 22,20	
	86-4/89				**PF170**	Ate	Ø 20,64	-ABS
2.0 (L48C) Eng.J7R746/ 747 (88kW)	90-93		R	L	**CF021**	Luc	Ø 22,20	
	90-93		R	R	**CF022**	Luc	Ø 22,20	
	90-93				**PF170**	Ate	Ø 20,64	-ABS, RHD
2.0 (L48J) Eng.F2R702 (64kW)	86-88		R	L	**CF017**	Bdx	Ø 22,00	
	86-88		R	R	**CF016**	Bdx	Ø 22,00	
	86-88				**PF008**	Ate	Ø 19,00	-ABS
2.0 (L48Q) Eng.J7R740 (99kW)	89-94		R	L	**CF021**	Luc	Ø 22,20	
	89-94		R	R	**CF022**	Luc	Ø 22,20	
	89-94				**PF221**	Ate	Ø 22,20	-ABS, LHD
2.0, 4WD (L48Y/R) Eng.J7R740 (99kW)	4/91-94		R	L	**CF065**	Bdx	Ø 22,00	CRCI, Only L48R
	4/91-94		R	R	**CF066**	Bdx	Ø 22,00	CRCI, Only L48R
	89-94				**PF221**	Ate	Ø 22,20	-ABS
2.1 D (L480) Eng.J8S784 (49-51kW)	92-94		R	L	**CF065**	Bdx	Ø 22,00	CRCI
	92-94		R	R	**CF066**	Bdx	Ø 22,00	CRCI
	92-94				**PF221**	Ate	Ø 22,20	
2.1 D (L48V/O) Eng.J8S600/ 740 (53kW)	4/91-		R	L	**CF065**	Bdx	Ø 22,00	CRCI
	5/89-3/91		R	L	**CF032**	Bdx	Ø 22,00	CRCI
	4/91-		R	R	**CF066**	Bdx	Ø 22,00	CRCI
	5/89-3/91		R	R	**CF033**	Bdx	Ø 22,00	CRCI
	89-3/91				**PF008**	Ate	Ø 19,00	-ABS, HDB
	89-94				**PF170**	Ate	Ø 20,64	-ABS
2.1 TD (L486) Eng.J8S704 (48kW)	6/87-89		R	L	**CF032**	Bdx	Ø 22,00	CRCI
	7/86-5/87		R	L	**CF017**	Bdx	Ø 22,00	Spain
	6/87-89		R	R	**CF033**	Bdx	Ø 22,00	CRCI
	7/86-5/87		R	R	**CF016**	Bdx	Ø 22,00	Spain
	86-89				**PF170**	Ate	Ø 20,64	-ABS
2.1 TD (L48A/W, L487, L488) Eng.J8S714/ 786/ 788 (65kW)	86-94		R	L	**CF021**	Luc	Ø 22,20	
	86-94		R	R	**CF022**	Luc	Ø 22,20	
	86-94				**PF170**	Ate	Ø 20,64	-ABS, RHD
	86-94				**PF221**	Ate	Ø 22,20	-ABS
2.2, 4WD (L48K) Eng.J7T754/ 755 (79-81kW)	86-94		R	L	**CF021**	Luc	Ø 22,20	
	86-94		R	R	**CF022**	Luc	Ø 22,20	
	86-5/90				**PF170**	Ate	Ø 20,64	-ABS, RHD
	93-94				**PF221**	Ate	Ø 22,20	-ABS, LHD
R25 (B29) 4/84-12/93								
2.0 (B292/294) Eng.J7R726 (76-88-99-100-103-119-129kW)	88-93				**PF175**		Ø 22,20	M/T+A/T
2.0 (B297, B29J) Eng.J6R706/ 707/ 760/ 762/ 763 (74-77-81kW)	84-5/88		R	L	**CF037**	Bdx	Ø 22,00	
	84-5/88		R	L	**CF039**	Luc	Ø 22,22	
	84-5/88		R	R	**CF038**	Bdx	Ø 22,00	
	84-5/88		R	R	**CF040**	Luc	Ø 22,22	
	84-5/88				**PF171**		Ø 20,64	-ABS
2.1 D Eng.J8S736 (44-48-53kW)	84-89		R	L	**CF037**	Bdx	Ø 22,00	
	84-89		R	L	**CF039**	Luc	Ø 22,22	

RENAULT

		Spare Parts	F/R	L/R	FRITECH ref.		DIMENSIONS mm.	NOTE
2.1 D Eng.J8S736 (44-48-53kW)	84-89		R	R	**CF038**	Bdx	Ø 22,00	
	84-89		R	R	**CF040**	Luc	Ø 22,22	
	84-89				**PF171**		Ø 20,64	-ABS
2.1 D (B296) Eng.J8S706 (44-48-53kW)	84-89		R	L	**CF037**	Bdx	Ø 22,00	
	84-89		R	L	**CF039**	Luc	Ø 22,22	
	84-89		R	R	**CF038**	Bdx	Ø 22,00	
	84-89		R	R	**CF040**	Luc	Ø 22,22	
	84-89				**PF171**		Ø 20,64	-ABS
2.1 TD (B290/ B29W) Eng.J8S708 (63kW)	84-92		R	L	**CF037**	Bdx	Ø 22,00	
	84-92		R	L	**CF039**	Luc	Ø 22,22	
	84-92		R	R	**CF038**	Bdx	Ø 22,00	
	84-92		R	R	**CF040**	Luc	Ø 22,22	
	84-92				**PF171**		Ø 20,64	-ABS
2.2 (B29B) Eng.J7T708/ 732/ 733	86-92		R	L	**CF037**	Bdx	Ø 22,00	
(67-70-74-76-79-85-89-91-101kW)	86-92		R	L	**CF039**	Luc	Ø 22,22	
	86-92		R	R	**CF038**	Bdx	Ø 22,00	
	86-92		R	R	**CF040**	Luc	Ø 22,22	
	86-5/87				**PF176**	Bdx	Ø 23,81	+ABS
	86-92				**PF171**		Ø 20,64	-ABS
2.2 (B29E) Eng.J7T706/ 707/ 714/ 715	84-89		R	L	**CF037**	Bdx	Ø 22,00	
(67-70-74-76-79-85-89-91-101kW)	84-89		R	L	**CF039**	Luc	Ø 22,22	
	84-89		R	R	**CF038**	Bdx	Ø 22,00	
	84-89		R	R	**CF040**	Luc	Ø 22,22	
	84-5/87				**PF176**	Bdx	Ø 23,81	+ABS
	84-89				**PF171**		Ø 20,64	-ABS
2.2 (B29E) Eng.J7T730/ 731	84-89		R	L	**CF037**	Bdx	Ø 22,00	
(67-70-74-76-79-85-89-91-101kW)	84-89		R	L	**CF039**	Luc	Ø 22,22	
	84-89		R	R	**CF038**	Bdx	Ø 22,00	
	84-89		R	R	**CF040**	Luc	Ø 22,22	
	84-89				**PF171**		Ø 20,64	-ABS
2.5 V6 T. (B295) Eng.Z7U702 (133kW)	84-90				**PF176**	Bdx	Ø 23,81	
2.5 V6 T. (B29G) Eng.Z7U700 (151kW)	90-92				**PF176**	Bdx	Ø 23,81	
2.7 V6 (B298) Eng.Z7V708/ 709/ 711 (92-94-96-105kW)	84-89				**PF176**	Bdx	Ø 23,81	
2.8 V6 (B293) Eng.Z7W700 (115kW)	87-90				**PF176**	Bdx	Ø 23,81	
2.8 V6 (B29A) Eng.Z7W702 (100kW)	86-88				**PF176**	Bdx	Ø 23,81	Austria/Switzerland/Germany, +ABS
	86-88				**PF171**		Ø 20,64	Austria/Switzerland/Germany, -ABS
2.8 V6 (B29F) Eng.Z7W706/ 707/ 709 (110kW)	87-92				**PF176**	Bdx	Ø 23,81	
R30 (127) 2/75-3/86								
2.1 TD (1270) Eng.J8S702 (44-48-53-66kW)	82-86		R	L	**CF037**	Bdx	Ø 22,00	
	82-86		R	L	**CF039**	Luc	Ø 22,22	
	82-86		R	R	**CF038**	Bdx	Ø 22,00	
	82-86		R	R	**CF040**	Luc	Ø 22,22	
	82-86				**PF171**		Ø 20,64	-ABS
R4 (112) 10/62-6/93								
0.8 (1120) Eng.839 (20kW)	81-82		R		**CF054**		Ø 19,05	
	81-82				**PF133**		Ø 20,64	
0.8 (1123) Eng.800 (21kW)	66-83		F	L	**CF057**		Ø 23,81	
	66-83		F	R	**CF058**		Ø 23,81	
	62-83		R		**CF054**		Ø 19,05	Ch -1077042, Nederland, Spain
	-83		R		**CF054**		Ø 19,05	Ch -1112761, Switzerland
	62-83		R		**CF054**		Ø 19,05	Exc. Switzerland, Nederland, Spain
	62-83		R		**CF011**		Ø 20,64	Ch 1077043-1379976, Spain
	-83		R		**CF010**		Ø 22,00	Ch 1379977-, Spain
	-10/76				**PF055**		Ø 19,05	Ch 1109667-
	11/76-82				**PF076**		Ø 20,64	
	82-83				**PF093**		Ø 20,64	
	11/76-82				**CT009**		Ø 12,00	
0.8 (1123) Eng.800705/ 81302/ B1B707 (21kW)	83-86		F	L	**CF057**		Ø 23,81	
	83-86		F	R	**CF058**		Ø 23,81	
	83-		R		**CF054**		Ø 19,05	Ch -1077042, Nederland, Spain
	83-		R		**CF054**		Ø 19,05	Ch -1112761, Switzerland
	83-86		R		**CF054**		Ø 19,05	Exc. Switzerland, Nederland, Spain
	83-86				**PF093**		Ø 20,64	

		Spare Parts	F/R	L/R	FRITECH ref.		DIMENSIONS mm.	NOTE
0.8 (1124) Eng.B1B705/ 707 (21kW)	83-88		R		**CF054**		Ø 19,05	
0.8 (1126) Eng.B1B705/ 707 (21kW)	76-82		F	L	**CF057**		Ø 23,81	
	76-82		F	R	**CF058**		Ø 23,81	
	76-82		R		**CF054**		Ø 19,05	France
	76-				**PF133**		Ø 20,64	Ch -28263
	76-82				**PF076**		Ø 20,64	
	76-82				**PF093**		Ø 20,64	
	76-82				**CT009**		Ø 12,00	
0.8 (1129) Eng.B1B705/ 707 (21kW)	76-82		F	L	**CF057**		Ø 23,81	
	76-82		F	R	**CF058**		Ø 23,81	
	76-82		R		**CF011**		Ø 20,64	
	76-82				**PF055**		Ø 19,05	
	76-82				**CT009**		Ø 12,00	
0.95 (112C) Eng.C1C708 (25-30-31-32-33kW)	87-93		R		**CF010**	Bdx	Ø 22,00	
	87-93		R		**CF055**	Luc	Ø 22,22	
	87-93				**PF079**		Ø 19,05	
	87-93				**CT009**		Ø 12,00	
1.1 (1128) Eng.688712/ C1E714/ 719 (25-33-35kW)	78-7/82		F	L	**CF057**		Ø 23,81	
	78-7/82		F	R	**CF058**		Ø 23,81	
	7/82-90		R		**CF011**	Bdx	Ø 20,64	Exc. Deutschland
	7/82-		R		**CF010**	Bdx	Ø 22,00	Ch -461100, Deutschland
	7/82-		R		**CF055**	Luc	Ø 22,22	Ch -461100, Deutschland
	78-7/82		R		**CF011**		Ø 20,64	
	-7/82				**PF079**		Ø 19,05	Ch 212751-
	7/82-				**PF118**		Ø 19,05	Ch -461100
	78-				**PF078**		Ø 20,64	Ch -33059
					PF077		Ø 20,64	Ch 33060-212750
R5 7/71-12/85								
0.8 (1220) Eng.800710 (19-21-25-26-27kW)	72-80		F	L	**CF057**		Ø 23,81	
	72-80		F	R	**CF058**		Ø 23,81	
	72-		R		**CF054**		Ø 19,05	Ch -116673
	-6/81		R		**CF011**		Ø 20,64	Ch 116674-
	-80		R		**CF010**		Ø 22,00	Ch 9570-, Switzerland
	72-				**PF055**		Ø 19,05	Ch -238423
	-80				**PF076**		Ø 20,64	Ch 116674-
	72-				**CT009**		Ø 12,00	Ch -116673
	-6/81				**CT010**		Ø 12,00	Ch 116674-
	-80				**CT010**		Ø 12,00	Ch 9570-, Switzerland
0.8 (1221) Eng.800710 (27kW)	82-84		F	L	**CF057**		Ø 23,81	
	82-84		F	R	**CF058**		Ø 23,81	
	82-		R		**CF054**		Ø 19,05	Ch -238423
	-82		R		**CF011**		Ø 20,64	Ch 238424-
	82-84		R		**CF010**		Ø 22,00	Incl. Canada
	82-				**PF055**		Ø 19,05	Ch -238423
	-84				**PF079**		Ø 19,05	Ch 335201-
	82-				**PF093**		Ø 20,64	Ch -335200
	82-84				**PF076**		Ø 20,64	Canada
	82-				**CT009**		Ø 12,00	Ch -238423
	-84				**CT010**		Ø 12,00	Ch 238424-
	82-84				**CT010**		Ø 12,00	Canada
0.8 (1391) Eng.800710 (27kW)	82-		F	L	**CF057**		Ø 23,81	Ch -51150
	82-		F	R	**CF058**		Ø 23,81	Ch -51150
	82-		R		**CF011**		Ø 20,64	Ch -51150
	-84		R		**CF010**		Ø 22,00	Ch 51151-, Incl. France
	-84				**PF079**		Ø 19,05	Ch 51151-, Incl. France
	82-				**PF076**		Ø 20,64	Ch -9233
					PF093		Ø 20,64	Ch 9234-51150, Incl. France
	-84				**CT010**		Ø 12,00	Ch 51151-
0.95 (1222) Eng.689710 (25-30-31-32-33kW)	72-85		R		**CF010**	Bdx	Ø 22,00	
	72-85		R		**CF055**	Luc	Ø 22,22	
	72-				**PF001**		Ø 19,05	Ch -1037, Switzerland
	72-10/77				**PF054**		Ø 19,05	
	72-85				**PF055**		Ø 19,05	Canada
	79-85				**PF079**		Ø 19,05	

RENAULT

		Spare Parts	F/R	L/R	FRITECH ref.		DIMENSIONS mm.	NOTE
0.95 (1222) Eng.689710 (25-30-31-32-33kW)	10/77-79				**PF077**		Ø 20,64	
	75-76				**PF093**		Ø 20,64	Germany
	72-				**CT009**		Ø 12,00	Ch -1037, Switzerland
	10/77-85				**CT010**		Ø 12,00	
	72-10/77				**CT009**		Ø 12,00	
0.95 (1392) Eng.689710 (25-30-31-32-33kW)	72-85		R		**CF010**	Bdx	Ø 22,00	
	72-85		R		**CF055**	Luc	Ø 22,22	
	72-85				**PF020**	Ate	Ø 19,05	+Servo
	72-85				**PF079**		Ø 19,05	
	72-85				**CT010**		Ø 12,00	+Servo
1.1 (1226/1227) Eng.688713/ C1E726	80-85		R		**CF010**	Bdx	Ø 22,00	
(25-30-31-32-33kW)	80-85		R		**CF055**	Luc	Ø 22,22	
	80-85				**PF020**	Ate	Ø 19,05	
	-85				**PF001**		Ø 19,05	Ch 151039-, Switzerland
	80-85				**CT010**		Ø 12,00	
1.1 (1397) Eng.688713/ C1E726 (25-33-35kW)	80-85		R		**CF010**	Bdx	Ø 22,00	
	80-85		R		**CF055**	Luc	Ø 22,22	
	80-85				**PF020**	Ate	Ø 19,05	Exc. Switzerland, +Servo
	80-85				**PF079**		Ø 19,05	
	80-85				**PF001**		Ø 19,05	Switzerland
	80-85				**PF118**		Ø 19,05	
	80-85				**CT010**		Ø 12,00	Exc. Switzerland, +Servo
1.3 (1224) Eng.810725	75-84		R		**CF010**	Bdx	Ø 22,00	
(29-31-32-33-37-40-44-47kW)	82-84		R		**CF055**	Luc	Ø 22,22	
	7/76-84				**PF020**	Ate	Ø 19,05	Exc. Canada
	7/76-84				**PF001**		Ø 19,05	Canada
	75-6/76				**PF093**		Ø 20,64	Canada
	75-84				**CT010**		Ø 12,00	Exc. Canada
1.3 (1225), Autom. Eng.810719/ 726/ 729	76-79		R		**CF010**	Bdx	Ø 22,00	
(29-31-32-33-37-40-44-47kW)	76-79		R		**CF055**	Luc	Ø 22,22	
	-79				**PF020**	Ate	Ø 19,05	Ch 103814-
	76-				**PF054**		Ø 19,05	Ch -31330, Exc. Switzerland/Denmark
	76-				**PF093**		Ø 20,64	Ch -31330, Switzerland/Denmark
					PF077		Ø 20,64	Ch 31331-103813
	76-79				**CT010**		Ø 12,00	
1.3 (1394) Eng.810725	75-84		R		**CF010**	Bdx	Ø 22,00	
(29-31-32-33-37-40-44-47kW)	75-84		R		**CF055**	Luc	Ø 22,22	
	75-84				**PF020**	Ate	Ø 19,05	+Servo
	75-84				**CT010**		Ø 12,00	
1.3 (1395/1396), Autom. Eng.810719/ 729 (33kW)	79-84		R		**CF010**	Bdx	Ø 22,00	
	79-84		R		**CF055**	Luc	Ø 22,22	
	79-84				**PF020**	Ate	Ø 19,05	
	79-84				**CT010**		Ø 12,00	
1.4 (1229) Eng.847725/ C2J713 (35-43-46kW)	82-85		R		**CF010**	Bdx	Ø 22,00	
	82-85		R		**CF055**	Luc	Ø 22,22	
	82-85				**PF020**	Ate	Ø 19,05	
	82-85				**CT010**		Ø 12,00	
1.4 (1399) Eng.847725/ C2J713 (43-46-50-53kW)	82-85		R		**CF010**	Bdx	Ø 22,00	
	82-85		R		**CF055**	Luc	Ø 22,22	
	82-85				**PF020**	Ate	Ø 19,05	Exc. Switzerland, A/T
	82-85				**PF001**		Ø 19,05	Switzerland
	82-85				**CT010**		Ø 12,00	
1.4 Alpine (1223) Eng.840725 (68kW)	77-81		R		**CF010**	Bdx	Ø 22,00	
	77-81		R		**CF055**	Luc	Ø 22,22	
	77-81				**PF020**	Ate	Ø 19,05	
	77-81				**CT010**		Ø 12,00	
1.4 Alpine T. (122B) Eng.840726/ C6J750 (79-81kW)	81-85				**PF020**	Ate	Ø 19,05	
Le Car	76-83		R		**CF010**	Bdx	Ø 22,00	Usa
	76-83		R		**CF055**	Luc	Ø 22,22	Usa
R6 10/69-4/87								
0.8 (1180) Eng.B1B800 (19-21-25-26-27kW)	-80		F	L	**CF057**		Ø 23,81	Ch 346751-
	-80		F	R	**CF058**		Ø 23,81	Ch 346751-
	-80		R		**CF011**		Ø 20,64	Ch 346751-

		Spare Parts	F/R	L/R	FRITECH ref.		DIMENSIONS mm.	NOTE
0.8 (1180) Eng.B1B800 (19-21-25-26-27kW)	-10/76				**PF055**		Ø 19,05	Ch 346751-, Incl. France
	10/76-80				**PF076**		Ø 20,64	
1.1 (1181) Eng.688711/ 712/ 713 (25-32-33-35kW)	70-87		R		**CF010**	Bdx	Ø 22,00	
	70-87		R		**CF055**	Luc	Ø 22,22	
	10/70-10/76				**PF054**		Ø 19,05	
	10/76-87				**PF093**		Ø 20,64	
R9 (L42) 9/81-12/89								
1.1 (L421) Eng.C1E715/ 720 (25-33-35kW)	10/86-87		R	L	**CF017**	Bdx	Ø 22,00	
	10/81-9/86		R	L	**CF023**	Luc	Ø 17,78	
	10/81-9/86		R	L	**CF014**		Ø 17,46	
	10/86-87		R	L	**CF012**		Ø 22,22	
	10/86-87		R	R	**CF016**	Bdx	Ø 22,00	
	10/81-9/86		R	R	**CF024**	Luc	Ø 17,78	
	10/81-9/86		R	R	**CF015**		Ø 17,46	
	10/86-87		R	R	**CF013**		Ø 22,22	
	10/81-87				**PF021**		Ø 19,05	
1.2 (L42S) Eng.C1G700/ 710 (40kW)	85-88		R	L	**CF025**	Bdx	Ø 20,64	CRCI, Exc. Spain
	85-88		R	L	**CF017**	Bdx	Ø 22,00	Incl. Spain
	85-88		R	L	**CF012**	Luc	Ø 22,22	Exc. Spain
	85-88		R	R	**CF026**	Bdx	Ø 20,64	CRCI, Exc. Spain
	85-88		R	R	**CF016**	Bdx	Ø 22,00	Incl. Spain
	85-88		R	R	**CF013**	Luc	Ø 22,22	Exc. Spain
	85-88				**PF021**		Ø 19,05	Exc. Spain
	85-88				**PF001**		Ø 19,05	Spain
1.4 (L422/L42C) Eng.C1J715/ 792/ 796/ C2J730	86-88		R	L	**CF025**	Bdx	Ø 20,64	CRCI
(44kW)	81-88		R	L	**CF017**	Bdx	Ø 22,00	Spain
	10/81-9/86		R	L	**CF012**	Luc	Ø 22,22	Spain
	86-88		R	R	**CF026**	Bdx	Ø 20,64	CRCI
	81-88		R	R	**CF016**	Bdx	Ø 22,00	Spain
	10/81-9/86		R	R	**CF013**	Luc	Ø 22,22	Spain
	10/81-88				**PF001**		Ø 19,05	Spain, LHD
	81-90				**PF021**		Ø 19,05	Exc. Spain, RHD
1.4 (L423, L42R) Eng.C2J717/ 720/ 755/ 766/ 767/	86-88		R	L	**CF025**	Bdx	Ø 20,64	CRCI, Exc. Spain
768 (49-53kW)	85-88		R	L	**CF017**	Bdx	Ø 22,00	Incl. Spain
	85-86		R	L	**CF012**	Luc	Ø 22,22	Exc. Spain
	86-88		R	R	**CF026**	Bdx	Ø 20,64	CRCI, Exc. Spain
	85-88		R	R	**CF016**	Bdx	Ø 22,00	Incl. Spain
	85-86		R	R	**CF013**	Luc	Ø 22,22	Exc. Spain
	81-88				**PF021**		Ø 19,05	Exc. Spain
	81-88				**PF001**		Ø 19,05	Spain
1.4 T. (L425) Eng.C1J760/ 764 (77-85-88kW)	84-86		R	L	**CF017**	Bdx	Ø 22,00	Spain
	84-86		R	L	**CF012**	Luc	Ø 22,22	
	84-86		R	R	**CF016**	Bdx	Ø 22,00	Spain
	84-86		R	R	**CF013**	Luc	Ø 22,22	
	84-86				**PF008**	Ate	Ø 19,00	-ABS, RHD
	84-86				**PF021**		Ø 19,05	Exc. Spain, LHD
1.6 D, TD (L424) Eng.F8M700/ 720/ 730 (40kW)	86-88		R	L	**CF025**	Bdx	Ø 20,64	CRCI, Exc. Spain
	82-86		R	L	**CF017**	Bdx	Ø 22,00	Incl. Spain
	82-86		R	L	**CF012**	Luc	Ø 22,22	Spain
	86-88		R	R	**CF026**	Bdx	Ø 20,64	CRCI, Exc. Spain
	82-86		R	R	**CF016**	Bdx	Ø 22,00	Incl. Spain
	82-86		R	R	**CF013**	Luc	Ø 22,22	Spain
	82-88				**PF021**		Ø 19,05	Exc. Spain
	82-88				**PF001**		Ø 19,05	Spain
1.7 (L426) Eng.F2N700/ 704 (55-59-64-68kW)	86-88		R	L	**CF025**	Bdx	Ø 20,64	CRCI, Exc. Spain
	84-88		R	L	**CF017**	Bdx	Ø 22,00	Incl. Spain
	84-86		R	L	**CF012**	Luc	Ø 22,22	Exc. Spain
	86-88		R	R	**CF026**	Bdx	Ø 20,64	CRCI, Exc. Spain
	84-88		R	R	**CF016**	Bdx	Ø 22,00	Incl. Spain
	84-86		R	R	**CF013**	Luc	Ø 22,22	Exc. Spain
	84-88				**PF021**		Ø 19,05	Exc. Spain
	84-88				**PF001**		Ø 19,05	Spain
1.7 (L42F) Eng.F3N718 (55-66-70kW)	86-88		R	L	**CF017**	Bdx	Ø 22,00	Spain
	86-88		R	L	**CF012**	Luc	Ø 22,22	

RENAULT

		Spare Parts	F/R	L/R	FRITECH ref.		DIMENSIONS mm.	NOTE
1.7 (L42F) Eng.F3N718 (55-66-70kW)	86-88		R	R	**CF016**	Bdx	Ø 22,00	Spain
	86-88		R	R	**CF013**	Luc	Ø 22,22	
	86-88				**PF021**		Ø 19,05	Exc. Spain, RHD
Rodeo 6 5/70-11/81								
0.8 (ACL1A) Eng.B1B800 (25kW)	70-73		F	L	**CF057**		Ø 23,81	
	70-73		F	R	**CF058**		Ø 23,81	
	70-73		R		**CF011**		Ø 20,64	
1.1 (ACL2B) Eng.688711/ 712/ 713 (35kW)	73-10/79		R		**CF010**	Bdx	Ø 22,00	
	73-10/79		R		**CF055**	Luc	Ø 22,22	
	73-10/76				**PF054**		Ø 19,05	
	10/76-10/79				**PF093**		Ø 20,64	
Safrane I (B54) 4/92-7/96								
2.0 (B540) Eng.J7R732/ 733 (76-88-99-119-129kW)	92-96		R		**CF089**	Luc	Ø 22,20	
	92-96				**PF226**	Ate	Ø 22,20	-ABS, LHD
	92-96				**PF212**		Ø 22,20	+ABS, RHD
2.0 (B542, B54E) Eng.J7R734/ 735 (97kW)	92-96				**PF212**		Ø 22,20	
2.1 TD (B546) Eng.J8S760 (65kW)	93-96		R		**CF089**	Luc	Ø 22,20	
	93-96				**PF226**	Ate	Ø 22,20	-ABS
	93-96				**PF212**		Ø 22,20	+ABS
2.2 (B541) Eng.J7T762 (79kW)	92-96		R		**CF089**	Luc	Ø 22,20	
	92-2/95				**PF226**	Ate	Ø 22,20	-ABS
	92-2/96				**PF212**		Ø 22,20	+ABS
2.2 (B543) Eng.J7T760/ 761 (101kW)	1/92-9/96				**PF212**		Ø 22,20	+ABS
2.5 DT (B548) Eng.S8U762/ 763 (83kW)	92-96				**PF191**	Bdx	Ø 23,81	A/T
	92-96				**PF212**		Ø 22,20	M/T
3.0 BiT. 4WD (B545) Eng.Z7X726 (193kW)	93-96				**PF191**	Bdx	Ø 23,81	
3.0 V6, 4WD (B54B, B544) Eng.Z7X721/ 722/ 723 (123kW)	92-96				**PF191**	Bdx	Ø 23,81	
Safrane II (B54) 7/96-12/00								
2.0 16v (B54L) Eng.N7Q710/ 711 (100-102kW)	96-00				**PF191**	Bdx	Ø 23,81	
2.2 DT (B54G) Eng.G8T714/ 716/ 740/ 760 (83kW)	96-00				**PF191**	Bdx	Ø 23,81	
2.5 20v (B54F) Eng.N7U700/ 701 (121kW)	96-00				**PF191**	Bdx	Ø 23,81	
2.9 24v (B54N) Eng.L7X713 (140kW)	99-00				**PF191**	Bdx	Ø 23,81	
3.0 V6 Eng.Z7X721/ 722/ 723 (123kW)	96-00				**PF191**	Bdx	Ø 23,81	
Sandero I 11/07-10/13								
1.4 Eng.K7J710 (55kW)	09-		R		**CF870**	Bch	Ø 17,46	Alu, -ABS
	09-		R		**CF144**	Bch	Ø 19,05	
	09-		R		**CF161**	Luc	Ø 17,78	+ABS
	09-				**PF971**	Ate	Ø 20,64	Alu, +ABS
	09-				**PF710**		Ø 20,64	Alu, -ABS
Scenic I (JA) 9/99-6/03								
1.4 16v (JA0 D/W, JA1H/0) Eng.K4J714/ 750 (70-72kW)	99-		R		**CF159**	Luc	Ø 20,64	-ABS
	99-				**PF311**	Ate	Ø 23,81	+ABS
	99-03				**PF850**	Ate	Ø 23,81	Alu, +ABS, +ASR
	99-				**PF312**	Ate	Ø 23,81	-ABS
1.6 16v (JA0B/4, JA11) Eng.K4M700/ 701/ 704/ 708/ 709 (75-79kW)	99-		R		**CF159**	Luc	Ø 20,64	-ABS
	99-				**PF311**	Ate	Ø 23,81	+ABS
	99-03				**PF850**	Ate	Ø 23,81	Alu, +ABS, +ASR
	99-				**PF312**	Ate	Ø 23,81	-ABS
1.8 16v (JA12/R/M/A) Eng.F4P720/ 722 (85-88kW)	1/01-02		R		**CF682**	Bdx	Ø 19,05	+ABS
	01-				**PF311**	Ate	Ø 23,81	+ABS
	01-03				**PF850**	Ate	Ø 23,81	Alu, +ABS, +ASR
	01-				**PF312**	Ate	Ø 23,81	-ABS
1.9 DCi (JA05, JA1F) Eng.F9Q732/ 733 (75kW)	00-				**PF311**	Ate	Ø 23,81	+ABS
	00-03				**PF850**	Ate	Ø 23,81	Alu, +ABS, +ASR
	00-				**PF312**	Ate	Ø 23,81	-ABS
1.9 DCi RX4 Eng.F9Q740 (74-75kW)	00-				**PF311**	Ate	Ø 23,81	+ABS
	00-03				**PF850**	Ate	Ø 23,81	Alu, +ABS, +ASR
1.9 DTi (JA0N) Eng.F9Q731/ 734/ 736 (72kW)	99-		R		**CF159**	Luc	Ø 20,64	-ABS
	99-				**PF311**	Ate	Ø 23,81	+ABS
	99-03				**PF850**	Ate	Ø 23,81	Alu, +ABS, +ASR
	99-				**PF312**	Ate	Ø 23,81	-ABS

		Spare Parts	F/R	L/R	FRITECH ref.		DIMENSIONS mm.	NOTE
1.9 DTi (JA1U) Eng.F9Q744 (59kW)	01-				**PF311**	Ate	Ø 23,81	+ABS, -ASR
	01-03				**PF850**	Ate	Ø 23,81	Alu, +ABS, +ASR
2.0 16v (JA1B/D) Eng.F4R740/ 741 (102-103kW)	00-				**PF311**	Ate	Ø 23,81	+ABS
	00-03				**PF850**	Ate	Ø 23,81	Alu, +ABS, +ASR
	00-				**PF312**	Ate	Ø 23,81	-ABS
2.0 16v IDE Eng.F5R740 (103kW)	99-				**PF311**	Ate	Ø 23,81	+ABS
	99-03				**PF850**	Ate	Ø 23,81	Alu, +ABS, +ASR
	99-				**PF312**	Ate	Ø 23,81	-ABS
2.0 16v RX4 Eng.F4R744 (102kW)	00-				**PF311**	Ate	Ø 23,81	+ABS
Scenic II (JM) 6/03-5/09								
1.4 16v Eng.K4J730 (72kW)	03-09				**PF987**	Bch	Ø 23,81	Alu
	03-09				**PF585**	Trw	Ø 23,81	Alu
1.5 DCi Eng.K9K702/ 710/ 722 (60kW)	03-09				**PF987**	Bch	Ø 23,81	Alu
	03-				**PF585**	Trw	Ø 23,81	Alu
1.5 DCi Eng.K9K722 (63kW)	05-				**PF585**	Trw	Ø 23,81	Alu
1.5 DCi Eng.K9K728 (74kW)	03-09				**PF987**	Bch	Ø 23,81	Alu
	03-				**PF585**	Trw	Ø 23,81	Alu
1.5 DCi Eng.K9K732/ 764 (78kW)	05-09				**PF987**	Bch	Ø 23,81	Alu
	05-09				**PF585**	Trw	Ø 23,81	Alu
1.6 Eng.K4M788 (77kW)	06-09				**PF987**	Bch	Ø 23,81	Alu
	06-09				**PF585**	Trw	Ø 23,81	Alu
1.6 16v Eng.K4M761/ 782 (83kW)	03-09				**PF987**	Bch	Ø 23,81	Alu
	03-09				**PF585**	Trw	Ø 23,81	Alu
1.6 16v Eng.K4M766 (82kW)	07-09				**PF585**	Trw	Ø 23,81	Alu
1.9 DCi Eng.F9Q804 (96kW)	07-09				**PF987**	Bch	Ø 23,81	Alu
1.9 DCi Eng.F9Q812 (88kW)	03-				**PF987**	Bch	Ø 23,81	Alu
	03-				**PF585**	Trw	Ø 23,81	Alu
2.0 Eng.F4R770/ 771 (99-101kW)	03-09				**PF987**	Bch	Ø 23,81	Alu
	03-				**PF585**	Trw	Ø 23,81	Alu
2.0 16v T. Eng.F4R776 (120kW)	04-09				**PF987**	Bch	Ø 23,81	Alu
	04-				**PF585**	Trw	Ø 23,81	Alu
2.0 DCi Eng.M9R700 (110kW)	05-09				**PF987**	Bch	Ø 23,81	Alu
	05-09				**PF585**	Trw	Ø 23,81	Alu
Scenic III (JZ) 2/09-								
1.2 TCE Eng.H5F400 (85kW)	12-				**PF990**	Trw	Ø 23,81	Alu
1.4 16v, TCe Eng.HJ4700 (96kW)	09-				**PF990**	Trw	Ø 23,81	Alu
1.5 DCi Eng.K9K830 (63kW)	09-				**PF990**	Trw	Ø 23,81	Alu
1.5 DCi Eng.K9K832 (78kW)	09-				**PF990**	Trw	Ø 23,81	Alu
1.5 DCi Eng.K9K836 (81kW)	09-				**PF990**	Trw	Ø 23,81	Alu
1.5 DCi Eng.K9K846 (70kW)	10-				**PF990**	Trw	Ø 23,81	Alu
1.6 16v Eng.K4M858/ 866 (81kW)	09-				**PF990**	Trw	Ø 23,81	Alu
1.6 DCi Eng.R9M402/ 404 (96kW)	11-				**PF990**	Trw	Ø 23,81	Alu
1.6 GPL Eng.K4M866 (81kW)	12-				**PF990**	Trw	Ø 23,81	Alu
1.9 DCi Eng.F9Q870/ 872 (96kW)	09-				**PF990**	Trw	Ø 23,81	Alu
2.0 16v Eng.M4R711 (103kW)	09-				**PF990**	Trw	Ø 23,81	Alu
2.0 DCi Eng.M9R610 (118kW)	12-				**PF990**	Trw	Ø 23,81	Alu
2.0 DCi Eng.M9R615 (110kW)	12-				**PF990**	Trw	Ø 23,81	Alu
Sport Spider (EF0) 3/95-10/99								
2.0 16v Eng.F7R7710/ 712/ 720 (110kW)	95-99				**PF176**	Bdx	Ø 23,81	
Super 5 (B/C40) 10/84-12/96								
0.95 (B/C/400) Eng.C1C700 (30kW)	6/87-10/88		R	L	**CF073**	Bdx	Ø 20,64	CRCI, Exc. Spain
	84-5/87		R	L	**CF017**	Bdx	Ø 22,00	Exc. Spain
	1/88-10/88		R	L	**CF042**	Luc	Ø 20,64	CRCI, Exc. Spain
	84-12/87		R	L	**CF012**	Luc	Ø 22,22	Exc. Spain
	6/87-10/88		R	L	**CF098**		Ø 22,00	Spain
	6/87-10/88		R	R	**CF072**	Bdx	Ø 20,64	CRCI, Exc. Spain
	84-5/87		R	R	**CF016**	Bdx	Ø 22,00	Exc. Spain
	1/88-10/88		R	R	**CF043**	Luc	Ø 20,64	CRCI, Exc. Spain
	84-12/87		R	R	**CF013**	Luc	Ø 22,22	Exc. Spain
	6/87-10/88		R	R	**CF099**		Ø 22,00	Spain
	84-88				**PF008**	Ate	Ø 19,00	-ABS, RHD
	84-88				**PF127**		Ø 17,46	LHD

RENAULT

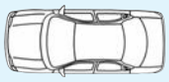		Spare Parts	F/R	L/R	FRITECH ref.		DIMENSIONS mm.	NOTE
1.1 (B/C/401) Eng.C1E750/ 752/ 754 (25-33-35kW)	6/87-10/88		R	L	**CF073**	Bdx	Ø 20,64	CRCI, Exc. Spain
	84-5/87		R	L	**CF017**	Bdx	Ø 22,00	Exc. Spain
	1/88-10/88		R	L	**CF042**	Luc	Ø 20,64	CRCI, Exc. Spain
	84-12/87		R	L	**CF012**	Luc	Ø 22,22	Exc. Spain
	6/87-10/88		R	L	**CF098**		Ø 22,00	Spain
	6/87-10/88		R	R	**CF072**	Bdx	Ø 20,64	CRCI, Exc. Spain
	84-5/87		R	R	**CF016**	Bdx	Ø 22,00	Exc. Spain
	1/88-10/88		R	R	**CF043**	Luc	Ø 20,64	CRCI, Exc. Spain
	84-12/87		R	R	**CF013**	Luc	Ø 22,22	Exc. Spain
	6/87-10/88		R	R	**CF099**		Ø 22,00	Spain
	84-88				**PF008**	Ate	Ø 19,00	-ABS
1.1 (B/C/401/H) Eng.C1E750/ 752/ 756/ 760 (34-35kW)	6/87-95		R	L	**CF073**	Bdx	Ø 20,64	CRCI, Exc. Spain
	86-5/87		R	L	**CF017**	Bdx	Ø 22,00	Exc. Spain
	1/88-95		R	L	**CF042**	Luc	Ø 20,64	CRCI, Exc. Spain
	86-12/87		R	L	**CF012**	Luc	Ø 22,22	Exc. Spain
	6/87-95		R	L	**CF098**		Ø 22,00	Spain
	6/87-95		R	R	**CF072**	Bdx	Ø 20,64	CRCI, Exc. Spain
	86-5/87		R	R	**CF016**	Bdx	Ø 22,00	Exc. Spain
	1/88-95		R	R	**CF043**	Luc	Ø 20,64	CRCI, Exc. Spain
	86-12/87		R	R	**CF013**	Luc	Ø 22,22	Exc. Spain
	6/87-95		R	R	**CF099**		Ø 22,00	Spain
	86-95				**PF008**	Ate	Ø 19,00	-ABS
1.2 (B/C40F) Eng.C1G702/ 720/ 722 (40kW)	6/87-90		R	L	**CF073**	Bdx	Ø 20,64	CRCI, Exc. Spain
	1/88-90		R	L	**CF042**	Luc	Ø 20,64	CRCI, Exc. Spain
	1/87-12/87		R	L	**CF012**	Luc	Ø 22,22	Exc. Spain
	6/87-90		R	L	**CF098**		Ø 22,00	Spain
	6/87-90		R	R	**CF072**	Bdx	Ø 20,64	CRCI, Exc. Spain
	1/88-90		R	R	**CF043**	Luc	Ø 20,64	CRCI, Exc. Spain
	1/87-12/87		R	R	**CF013**	Luc	Ø 22,22	Exc. Spain
	6/87-90		R	R	**CF099**		Ø 22,00	Spain
	87-90				**PF008**	Ate	Ø 19,00	-ABS
1.4 (B/C402/407), Kat Eng.C1J/ C3J700/ 702/ 760/ 768/ 780 (35-43-44kW)	6/87-88		R	L	**CF073**	Bdx	Ø 20,64	CRCI, Exc. Spain
	84-5/87		R	L	**CF017**	Bdx	Ø 22,00	Exc. Spain
	1/88-6/88		R	L	**CF042**	Luc	Ø 20,64	CRCI, Exc. Spain
	84-12/87		R	L	**CF012**	Luc	Ø 22,22	Exc. Spain
	6/87-88		R	L	**CF098**		Ø 22,00	Spain
	6/87-88		R	R	**CF072**	Bdx	Ø 20,64	CRCI, Exc. Spain
	84-5/87		R	R	**CF016**	Bdx	Ø 22,00	Exc. Spain
	1/88-6/88		R	R	**CF043**	Luc	Ø 20,64	CRCI, Exc. Spain
	84-12/87		R	R	**CF013**	Luc	Ø 22,22	Exc. Spain
	6/87-88		R	R	**CF099**		Ø 22,00	Spain
	84-88				**PF008**	Ate	Ø 19,00	-ABS
1.4 (B/C403) Eng.C2J700/ 780/ 781/ 788/ 798 (43-46-50-53kW)	6/87-10/88		R	L	**CF098**		Ø 22,00	Spain
	6/87-10/88		R	R	**CF099**		Ø 22,00	Spain
1.4 (B/C40J) Eng.C2J782 (43-46-50-53kW)	6/87-10/88		R	L	**CF098**		Ø 22,00	Spain
	6/87-10/88		R	R	**CF099**		Ø 22,00	Spain
1.4 (B/C40M) Eng.C2J784 (43-46-50-53kW)	6/87-90		R	L	**CF073**	Bdx	Ø 20,64	CRCI, Exc. Spain
	1/88-90		R	L	**CF042**	Luc	Ø 20,64	CRCI, Exc. Spain
	6/87-12/87		R	L	**CF012**	Luc	Ø 22,22	Exc. Spain
	6/87-90		R	L	**CF098**		Ø 22,00	Spain
	6/87-90		R	R	**CF072**	Bdx	Ø 20,64	CRCI, Exc. Spain
	1/88-90		R	R	**CF043**	Luc	Ø 20,64	CRCI, Exc. Spain
	6/87-12/87		R	R	**CF013**	Luc	Ø 22,22	Exc. Spain
	6/87-90		R	R	**CF099**		Ø 22,00	Spain
	87-90				**PF008**	Ate	Ø 19,00	-ABS
1.4 T. (C405) Eng.840730 (118kW)	6/87-10/88		R	L	**CF098**		Ø 22,00	Spain
	6/87-10/88		R	R	**CF099**		Ø 22,00	Spain
1.4 T. (C405) Eng.C1J782/ 784/ 788 (77-85-88kW)	6/87-10/88		R	L	**CF098**		Ø 22,00	Spain
	6/87-10/88		R	R	**CF099**		Ø 22,00	Spain
	85-90				**PF008**	Ate	Ø 19,00	-ABS
1.6 D (B/C/404) Eng.F8M720/ 730 (40kW)	6/87-96		R	L	**CF073**	Bdx	Ø 20,64	CRCI, Exc. Spain
	85-5/87		R	L	**CF017**	Bdx	Ø 22,00	Exc. Spain
	1/88-96		R	L	**CF042**	Luc	Ø 20,64	CRCI, Exc. Spain
	85-12/87		R	L	**CF012**	Luc	Ø 22,22	Exc. Spain

		Spare Parts	F/R	L/R	FRITECH ref.		DIMENSIONS mm.	NOTE
1.6 D (B/C/404) Eng.F8M720/ 730 (40kW)	85-96		R	L	**CF098**		Ø 22,00	Spain
	6/87-96		R	R	**CF072**	Bdx	Ø 20,64	CRCI, Exc. Spain
	85-5/87		R	R	**CF016**	Bdx	Ø 22,00	Exc. Spain
	1/88-96		R	R	**CF043**	Luc	Ø 20,64	CRCI, Exc. Spain
	85-12/87		R	R	**CF013**	Luc	Ø 22,22	Exc. Spain
	6/87-96		R	R	**CF099**		Ø 22,00	Spain
	85-96				**PF008**	Ate	Ø 19,00	-ABS
1.7 (B/C408) Eng.F3N716/ 717 (54kW)	86-95		R	L	**CF073**	Bdx	Ø 20,64	CRCI, Exc. Spain
	1/88-95		R	L	**CF042**	Luc	Ø 20,64	CRCI, Exc. Spain
	86-12/87		R	L	**CF012**	Luc	Ø 22,22	Exc. Spain
	86-95		R	R	**CF072**	Bdx	Ø 20,64	CRCI, Exc. Spain
	1/88-95		R	R	**CF043**	Luc	Ø 20,64	CRCI, Exc. Spain
	86-12/87		R	R	**CF013**	Luc	Ø 22,22	Exc. Spain
	86-95				**PF008**	Ate	Ø 19,00	-ABS
1.7 (B/C40K/G) Eng.F2N740/ 742 (64-66kW)	6/87-95		R	L	**CF073**	Bdx	Ø 20,64	CRCI, Exc. Spain
	1/88-95		R	L	**CF042**	Luc	Ø 20,64	CRCI, Exc. Spain
	6/87-12/87		R	L	**CF012**	Luc	Ø 22,22	Exc. Spain
	6/87-95		R	R	**CF072**	Bdx	Ø 20,64	CRCI, Exc. Spain
	1/88-95		R	R	**CF043**	Luc	Ø 20,64	CRCI, Exc. Spain
	6/87-12/87		R	R	**CF013**	Luc	Ø 22,22	Exc. Spain
	87-95				**PF008**	Ate	Ø 19,00	-ABS
Thalia 2/98-								
1.5 DCi Eng.K9K752 (50kW)	03-		R		**CF256**	Bch	Ø 17,46	Alu, +ABS
	03-		R		**CF161**	Luc	Ø 17,78	+ABS
1.9 D Eng.F8Q630 (48kW)	9/98-		R		**CF256**	Bch	Ø 17,46	Alu, +ABS
	9/98-		R		**CF144**	Bch	Ø 19,05	-ABS
	9/98-		R		**CF161**	Luc	Ø 17,78	+ABS
Twingo I (C06) 3/93-6/07								
1.2 (C063/64) Eng.C3G700/ 702 (40kW)	93-96		R	L	**CF072**	Bdx	Ø 20,64	CRCI, -ABS
	93-96		R	R	**CF073**	Bdx	Ø 20,64	CRCI, -ABS
	93-96		R		**CF122**		Ø 20,64	+ABS
	93-96				**PF211**	Bdx	Ø 20,64	+ABS
	93-96				**PF134**		Ø 20,64	-ABS
1.2 (C066/68) Eng.D7F702/ 703/ 704 (43-44kW)	5/96-		R	L	**CF072**	Bdx	Ø 20,64	CRCI, -ABS
	5/96-		R	R	**CF073**	Bdx	Ø 20,64	CRCI, -ABS
	7/98-		R		**CF161**	Luc	Ø 17,78	+ABS
	5/96-6/98		R		**CF122**		Ø 20,64	+ABS
	5/96-				**PF211**	Bdx	Ø 20,64	+ABS
	5/96-				**PF134**		Ø 20,64	-ABS
1.2 (C067) Eng.D7F700/ 701 (40kW)	96-		R	L	**CF072**	Bdx	Ø 20,64	CRCI, -ABS
	96-		R	R	**CF073**	Bdx	Ø 20,64	CRCI, -ABS
	7/98-		R		**CF161**	Luc	Ø 17,78	+ABS
	5/96-6/98		R		**CF122**		Ø 20,64	+ABS
	5/96-6/98				**PF211**	Bdx	Ø 20,64	+ABS
	96-				**PF134**		Ø 20,64	-ABS
1.2 16v Eng.D4F708 (44kW)	04-07		R	L	**CF072**	Bdx	Ø 20,64	CRCI, -ABS
	04-07		R	R	**CF073**	Bdx	Ø 20,64	CRCI, -ABS
	04-07		R		**CF161**	Luc	Ø 17,78	+ABS
	04-07				**PF211**	Bdx	Ø 20,64	+ABS
	04-07				**PF134**		Ø 20,64	-ABS
1.2 16v (C06C/ D/K) Eng.D4F702/ 704 (55kW)	01-		R		**CF161**	Luc	Ø 17,78	+ABS
	01-				**PF211**	Bdx	Ø 20,64	+ABS
	01-				**PF134**		Ø 20,64	-ABS
Twingo II (CN0) 7/07-								
1.2 Eng.D7F800 (43kW)	07- 9/12		R		**CF852**		Ø 17,78	Alu
	07-				**PF729**	Ate	Ø 20,64	Alu
1.2 16v Eng.D4F764/ 770/ 772 (55kW)	09-9/12		R		**CF852**		Ø 17,78	Alu
	09-				**PF729**	Ate	Ø 20,64	Alu
1.2 16v Eng.D4F772 (56kW)	07-9/12		R		**CF852**		Ø 17,78	Alu
	07-				**PF729**	Ate	Ø 20,64	Alu
1.2 16v TCE Eng.D4F780/ 782 (74-75kW)	07-9/12		R		**CF852**		Ø 17,78	Alu
	07-				**PF729**	Ate	Ø 20,64	Alu
1.5 DCi Eng.K9K718 (62kW)	08-9/12		R		**CF852**		Ø 17,78	Alu
	08-				**PF729**	Ate	Ø 20,64	Alu, -ESP

RENAULT

		Spare Parts	F/R	L/R	FRITECH ref.		DIMENSIONS mm.	NOTE
1.5 DCi Eng.K9K740 (47kW)	07-9/12		R		**CF852**		Ø 17,78	Alu
	07-				**PF729**	Ate	Ø 20,64	Alu
1.5 DCi Eng.K9K820 (55kW)	10-9/12		R		**CF852**		Ø 17,78	Alu
	10-				**PF729**	Ate	Ø 20,64	Alu
1.5 DCi Eng.K9K820 (63kW)	10-9/12		R		**CF852**		Ø 17,78	Alu
	10-				**PF729**	Ate	Ø 20,64	Alu, -ESP
1.6 RS Eng.K4M854 (98kW)	07-		R		**CF852**		Ø 17,78	Alu
Twingo III 10/14-								
0.9 Tce Eng.H4B.401 (66kW)	14-		R	L	**CF1020**	Loc	Ø 22,00	Alu
	14-		R	R	**CF1021**	Loc	Ø 22,00	Alu
1.0 Eng.H4D.400 (52kW)	14-		R	L	**CF1022**	Loc	Ø 20,64	Alu
	14-		R	R	**CF1023**	Loc	Ø 20,64	Alu
Vel Satis (BJ0) 6/02-								
2.0 16v T. Eng.F4R762/ 764/ 766 (125kW)	04-05				**PF639**		Ø 25,40	Alu, +ABS, -TC
	04-				**PF640**		Ø 25,40	Alu, -ABS, +TC
2.0, 16v, T. (BJ0K) Eng.F4R762/ 763 (120kW)	6/02-05				**PF639**		Ø 25,40	Alu, +ABS, -TC
	6/02-				**PF640**		Ø 25,40	Alu, -ABS, +TC
2.2 DCi Eng.G9T600/ 606 (102kW)	04-05				**PF639**		Ø 25,40	Alu, +ABS, -TC
	04-				**PF640**		Ø 25,40	Alu, -ABS, +TC
2.2 DCi (BJ0E) Eng.G9T702/ 742/ 743 (110kW)	6/02-05				**PF639**		Ø 25,40	Alu, +ABS, -TC
	6/02-				**PF640**		Ø 25,40	Alu, -ABS, +TC
2.2 DCi (BJOH) Eng.G9T702 (83-85kW)	04-05				**PF639**		Ø 25,40	Alu, +ABS, -TC
	04-				**PF640**		Ø 25,40	Alu, -ABS, +TC
3.0 DCi (BJ0B) Eng.P9X701 (130kW)	6/02-05				**PF639**		Ø 25,40	Alu, +ABS, -TC
	6/02-				**PF640**		Ø 25,40	Alu, -ABS, +TC
3.5 V6 (BJ0V/U) Eng.V4Y701 (177kW)	6/02-05				**PF639**		Ø 25,40	Alu, +ABS, -TC
	6/02-				**PF640**		Ø 25,40	Alu, -ABS, +TC

RENAULT LCV

Clio Van I (S57) 1/91-9/98								
1.1 (S571) Eng.C1E700 (35kW)	1/91-2/91		R	L	**CF025**	Bdx	Ø 20,64	CRCI
	3/91-98		R	L	**CF072**	Bdx	Ø 20,64	CRCI
	1/91-2/91		R	L	**CF042**	Luc	Ø 20,64	CRCI
	1/91-2/91		R	L	**CF043**	Luc	Ø 20,64	CRCI
	1/91-2/91		R	R	**CF026**	Bdx	Ø 20,64	CRCI
	3/91-98		R	R	**CF073**	Bdx	Ø 20,64	CRCI
	3/91-98		R	R	**CF042**	Luc	Ø 20,64	CRCI
	3/91-98		R	R	**CF043**	Luc	Ø 20,64	CRCI
	1/91-96				**PF008**	Ate	Ø 19,00	-ABS
	3/96-98				**PF007**	Ate	Ø 20,64	-ABS
	3/96-98				**PF211**	Bdx	Ø 20,64	+ABS, LHD
1.2 (S572, S57A,R) Eng.E7F706 (40kW)	1/91-2/91		R	L	**CF025**	Bdx	Ø 20,64	CRCI
	3/91-98		R	L	**CF072**	Bdx	Ø 20,64	CRCI
	1/91-2/91		R	L	**CF042**	Luc	Ø 20,64	CRCI
	1/91-2/91		R	R	**CF026**	Bdx	Ø 20,64	CRCI
	3/91-98		R	R	**CF073**	Bdx	Ø 20,64	CRCI
	3/91-98		R	R	**CF043**	Luc	Ø 20,64	CRCI
	1/91-12/96				**PF008**	Ate	Ø 19,00	-ABS
	1/94-98				**PF007**	Ate	Ø 20,64	-ABS
	3/96-98				**PF211**	Bdx	Ø 20,64	+ABS, LHD
	94-96				**PF131**	Bdx	Ø 20,64	+ABS, LHD
1.2 (S573) Eng.E7F750 (43-44kW)	1/91-2/91		R	L	**CF025**	Bdx	Ø 20,64	CRCI
	3/91-98		R	L	**CF072**	Bdx	Ø 20,64	CRCI
	1/91-2/91		R	L	**CF042**	Luc	Ø 20,64	CRCI
	1/91-2/91		R	L	**CF042**	Luc	Ø 20,64	CRCI
	1/91-2/91		R	R	**CF026**	Bdx	Ø 20,64	CRCI
	3/91-98		R	R	**CF073**	Bdx	Ø 20,64	CRCI
	3/91-98		R	R	**CF043**	Luc	Ø 20,64	CRCI
	3/91-98		R	R	**CF043**	Luc	Ø 20,64	CRCI
	1/91-12/96				**PF008**	Ate	Ø 19,00	-ABS
	1/94-98				**PF007**	Ate	Ø 20,64	-ABS
	3/96-98				**PF211**	Bdx	Ø 20,64	+ABS, LHD
	94-96				**PF131**	Bdx	Ø 20,64	+ABS, LHD

		Spare Parts	F/R	L/R	FRITECH ref.		DIMENSIONS mm.	NOTE
1.9 D (S57L, I, S575,576) Eng.F8Q730/ 732	1/91-2/91		R	L	**CF025**	Bdx	Ø 20,64	CRCI
(47-66-68kW)	3/91-98		R	L	**CF072**	Bdx	Ø 20,64	CRCI
	1/91-2/91		R	L	**CF042**	Luc	Ø 20,64	CRCI
	1/91-2/91		R	L	**CF042**	Luc	Ø 20,64	CRCI
	1/91-2/91		R	R	**CF026**	Bdx	Ø 20,64	CRCI
	3/91-98		R	R	**CF073**	Bdx	Ø 20,64	CRCI
	3/91-98		R	R	**CF043**	Luc	Ø 20,64	CRCI
	3/91-98		R	R	**CF043**	Luc	Ø 20,64	CRCI
	1/91-96				**PF008**	Ate	Ø 19,00	-ABS
	1/91-98				**PF007**	Ate	Ø 20,64	-ABS
	3/96-9/98				**PF597**	Bch	Ø 19,05	+ABS, RHD
	1/91-96				**PF131**	Bdx	Ø 20,64	+ABS, LHD
	3/96-98				**PF211**	Bdx	Ø 20,64	+ABS, LHD
Clio Van II (SB0) 9/98-5/05								
1.2 (SB0A) Eng.D7F720/ 722 (43kW)	98-		R		**CF256**	Bch	Ø 17,46	Alu, +ABS
	98-		R		**CF144**	Bch	Ø 19,05	-ABS
	98-		R		**CF161**	Luc	Ø 17,78	+ABS
	98-				**PF438**	Ate	Ø 20,64	Alu, +ABS
	98-				**PF288**	Ate	Ø 20,64	Alu, -ABS
	98-				**PF437**	Bch	Ø 20,64	Alu, +ABS
	98-				**PF436**	Bch	Ø 20,64	Alu, -ABS, LHD/RHD
1.9 D (SB0E) Eng.F8Q606/ 630/ 662 (40-44-47kW)	9/98-		R		**CF256**	Bch	Ø 17,46	Alu, +ABS
	9/98-		R		**CF144**	Bch	Ø 19,05	-ABS
	9/98-		R		**CF161**	Luc	Ø 17,78	+ABS
	9/98-				**PF438**	Ate	Ø 20,64	Alu, +ABS
	9/98-				**PF288**	Ate	Ø 20,64	Alu, -ABS
	9/98-				**PF437**	Bch	Ø 20,64	Alu, +ABS
	9/98-				**PF436**	Bch	Ø 20,64	Alu, -ABS, LHD/RHD
Extra 1/86-1/98								
1.0 (30kW)	86-91		R	L	**CF017**	Bdx	Ø 22,00	
	86-91		R	L	**CF012**	Luc	Ø 22,22	
	86-91		R	R	**CF016**	Bdx	Ø 22,00	
	86-91		R	R	**CF013**	Luc	Ø 22,22	
	86-91				**PF008**	Ate	Ø 19,00	-ABS, RHD
	86-91				**PF127**		Ø 17,46	-ABS, LHD
1.1 Eng.C1E700 (35kW)	86-91		R	L	**CF017**	Bdx	Ø 22,00	
	86-91		R	L	**CF012**	Luc	Ø 22,22	
	86-91		R	R	**CF016**	Bdx	Ø 22,00	
	86-91		R	R	**CF013**	Luc	Ø 22,22	
	86-91				**PF008**	Ate	Ø 19,00	-ABS, RHD
1.2 Eng.C3G710/ 712 (40kW)	91-		R	L	**CF059**	Bdx	Ø 20,64	
	91-		R	R	**CF060**	Bdx	Ø 20,64	
	91-				**PF008**	Ate	Ø 19,00	-ABS, RHD
1.4 Eng.C2J784 (44kW)	1/89-		R	L	**CF059**	Bdx	Ø 20,64	
	86-12/88		R	L	**CF069**	Bdx	Ø 22,00	
	1/89-		R	R	**CF060**	Bdx	Ø 20,64	
	86-12/88		R	R	**CF081**	Bdx	Ø 22,00	
	91-		R		**CF089**	Luc	Ø 22,20	
	86-				**PF008**	Ate	Ø 19,00	-ABS, RHD
1.6 D Eng.F8M720/ 730/ 736/ 760 (40kW)	1/89-		R	L	**CF059**	Bdx	Ø 20,64	
	86-12/88		R	L	**CF069**	Bdx	Ø 22,00	
	1/89-		R	R	**CF060**	Bdx	Ø 20,64	
	86-12/88		R	R	**CF081**	Bdx	Ø 22,00	
	91-		R		**CF089**	Luc	Ø 22,20	
	86-				**PF008**	Ate	Ø 19,00	-ABS, RHD
Kangoo I (FC0) Van 3/98-1/08								
1.2 (FC01,0A,0F) Eng.D7F710/ 720/ 722/ 744/ 746	3/98-		R		**CF139**		Ø 22,00	Alu, +RC
(43kW)	3/98-		R		**CF138**		Ø 22,00	Alu, -RC
	3/98-				**PF251**		Ø 22,20	Alu, +ABS, RHD
	3/98-				**PF582**		Ø 22,20	Alu, +ABS, LHD
	3/98-				**PF252**		Ø 22,20	Alu, -ABS, LHD
1.2 16v (FC05) Eng.D4F712/ 714 (55kW)	6/01-		R		**CF139**		Ø 22,00	Alu, +RC
	6/01-		R		**CF138**		Ø 22,00	Alu, -RC
	6/01-				**PF251**		Ø 22,20	Alu, +ABS, RHD

RENAULT LCV

		Spare Parts	F/R	L/R	FRITECH ref.		DIMENSIONS mm.	NOTE
1.2 16v (FC05) Eng.D4F712/ 714 (55kW)	6/01-				**PF582**		Ø 22,20	Alu, +ABS, LHD
	6/01-				**PF252**		Ø 22,20	Alu, -ABS, LHD
1.4 (FC0C,0B,0H,0M) Eng.E7J634/ 635/ 780/	3/98-		R		**CF139**		Ø 22,00	Alu, +RC
K7J700/ 701 (55kW)	3/98-		R		**CF138**		Ø 22,00	Alu, -RC
	3/98-				**PF251**		Ø 22,20	Alu, +ABS, RHD
	3/98-				**PF582**		Ø 22,20	Alu, +ABS, LHD
	3/98-				**PF252**		Ø 22,20	Alu, -ABS, LHD
1.5 DCi Eng.K9K702/ 710/ 722 (60kW)	03-		R		**CF139**		Ø 22,00	Alu, +RC
	03-		R		**CF138**		Ø 22,00	Alu, -RC
	03-				**PF251**		Ø 22,20	Alu, +ABS, RHD
	03-				**PF582**		Ø 22,20	Alu, +ABS, LHD
	03-				**PF252**		Ø 22,20	Alu, -ABS, LHD
1.5 DCi Eng.K9K710 (42kW)	02-		R		**CF139**		Ø 22,00	Alu, +RC
	02-		R		**CF138**		Ø 22,00	Alu, -RC
	02-				**PF251**		Ø 22,20	Alu, +ABS, RHD
	02-				**PF582**		Ø 22,20	Alu, +ABS, LHD
	02-				**PF252**		Ø 22,20	Alu, -ABS, LHD
1.5 DCi Eng.K9K714 (50kW)	05-		R		**CF139**		Ø 22,00	Alu, +RC
	05-		R		**CF138**		Ø 22,00	Alu, -RC
	05-				**PF251**		Ø 22,20	Alu, +ABS, RHD
	05-				**PF582**		Ø 22,20	Alu, +ABS, LHD
	05-				**PF252**		Ø 22,20	Alu, -ABS, LHD
1.5 DCi (FC07) Eng.K9K700/ 704 (48kW)	6/01-		R		**CF139**		Ø 22,00	Alu, +RC
	6/01-		R		**CF138**		Ø 22,00	Alu, -RC
	01-				**PF582**		Ø 22,20	Alu, +ABS, LHD
	6/01-				**PF251**		Ø 22,20	Alu, +ABS, RHD
	6/01-				**PF252**		Ø 22,20	Alu, -ABS, LHD
1.6 16v, 4WD (FC0L, FC0P, FC0S) Eng.K4M750/	01-08		R		**CF139**		Ø 22,00	Alu, Exc. 4WD, +RC
752/ 753 (70kW)	01-08		R		**CF138**		Ø 22,00	Alu, Exc. 4WD, -RC
	01-08				**PF251**		Ø 22,20	Alu, +ABS, RHD
	01-08				**PF582**		Ø 22,20	Alu, +ABS, LHD
	01-08				**PF252**		Ø 22,20	Alu, -ABS, LHD
1.9 D Eng.F8Q632 (48kW)	3/98-		R		**CF139**		Ø 22,00	Alu, +RC
	3/98-		R		**CF138**		Ø 22,00	Alu, -RC
	3/98-				**PF251**		Ø 22,20	Alu, +ABS, RHD
	3/98-				**PF252**		Ø 22,20	Alu, -ABS, LHD
1.9 D (FC0E,02,0J,0N) Eng.F8Q630/ 632 (47kW)	3/98-		R		**CF139**		Ø 22,00	Alu, +RC
	3/98-		R		**CF138**		Ø 22,00	Alu, -RC
	3/98-				**PF251**		Ø 22,20	Alu, +ABS, RHD
	3/98-				**PF252**		Ø 22,20	Alu, -ABS, LHD
1.9 D 55 (FC0D) Eng.F8Q606/ 630/ 662 (40kW)	3/98-		R		**CF139**		Ø 22,00	Alu, +RC
	3/98-		R		**CF138**		Ø 22,00	Alu, -RC
	3/98-				**PF251**		Ø 22,20	Alu, +ABS, RHD
	3/98-				**PF252**		Ø 22,20	Alu, -ABS, LHD
1.9 DCi Eng.F9Q790 (62kW)	03-				**PF582**		Ø 22,20	Alu, +ABS, LHD
1.9 DCi 4WD (FC0V) Eng.F9Q782/ 790 (59kW)	01-08				**PF582**		Ø 22,20	Alu, +ABS, LHD
1.9 DTi (FC0U) Eng.F9Q780 (59kW)	2/00-		R		**CF139**		Ø 22,00	Alu, +RC
	2/00-		R		**CF138**		Ø 22,00	Alu, -RC
	2/00-				**PF251**		Ø 22,20	Alu, +ABS, RHD
	2/00-				**PF582**		Ø 22,20	Alu, +ABS, LHD
	2/00-				**PF252**		Ø 22,20	Alu, -ABS, LHD
Kangoo II Van (FW0/1) 2/08-								
1.5 DCi Eng.K9K800/ 802 (63kW)	08-		R		**CF854**	Bch	Ø 22,00	Alu
1.5 DCi Eng.K9K806 (76kW)	08-		R		**CF854**	Bch	Ø 22,00	Alu
1.5 DCi Eng.K9K840 (50kW)	08-		R		**CF854**	Bch	Ø 22,00	Alu
1.6 Eng.K7M (66kW)	08-		R		**CF854**	Bch	Ø 22,00	Alu
1.6 16v Eng.K4M830 (78kW)	08-		R		**CF854**	Bch	Ø 22,00	Alu
Mascott 1/99-10/10								
110.35/.50/.55 Eng.8140.43B/ C (78kW)	99-04				**PF204**		Ø 25,40	
120.35 Eng.ZD3A600/ DXi3 (85kW)	04-10				**PF204**		Ø 25,40	
120.55 Eng.ZD3A600 (85kW)	04-10				**PF204**		Ø 25,40	
120.65 Eng.ZD3A600 (85kW)	04-10				**PF204**		Ø 25,40	
130.35/.55 Eng.8140.43S (92kW)	99-04				**PF204**		Ø 25,40	

		Spare Parts	F/R	L/R	FRITECH ref.		DIMENSIONS mm.	NOTE
140.35/.55 Eng.8140.43K (103kW)	01-04				**PF204**		Ø 25,40	
150.35 Eng.8140.43N (107kW)	01-04				**PF204**		Ø 25,40	
150.55/ .65 Eng.8140.43N (107kW)	01-04				**PF204**		Ø 25,40	
160.35 Eng.ZD3A604 (115kW)	04-10				**PF204**		Ø 25,40	
160.55 Eng.ZD3A604 (115kW)	04-10				**PF204**		Ø 25,40	
160.65 Eng.ZD3A604 (115kW)	04-10				**PF204**		Ø 25,40	
90.35 Eng.8140.63 (63-78kW)	99-01				**PF204**		Ø 25,40	
Master I 8/80-7/98								
2.0 28-35 Eng.829731/ 730 (59-63-76-80-81kW)	80-86		R		**CF157**	Luc	Ø 25,40	Exc. Switzerland/Norway/Sweden
	80-86				**PF289**		Ø 25,40	Exc. Switzerland/Norway/Sweden, Exc. Eletrique
2.0 28-35 Eng.J5R718/ 728 (58-60kW)	86-98		R		**CF157**	Luc	Ø 25,40	Exc. Switzerland/Norway/Sweden
	10/94-12/97				**PF426**	Luc	Ø 25,40	
	86-98				**PF289**		Ø 25,40	Exc. Switzerland/Norway/Sweden, Exc. Eletrique
2.1 D 28-35 Eng.J8S330 (44-48-53-66kW)	80-94		R		**CF157**	Luc	Ø 25,40	Exc. Switzerland/Norway/Sweden
	10/94-12/97				**PF426**	Luc	Ø 25,40	
	80-94				**PF289**		Ø 25,40	Exc. Switzerland/Norway/Sweden, Exc. Eletrique
2.2 30 Eng.J7T782/ 788	80-98		R		**CF157**	Luc	Ø 25,40	Exc. Switzerland/Norway/Sweden
(67-70-74-76-79-85-89-91-101kW)	10/94-12/97				**PF426**	Luc	Ø 25,40	
	80-98				**PF289**		Ø 25,40	Exc. Switzerland/Norway/Sweden, Exc. Eletrique
2.4 D 28-35 Eng.Sofim-8140.61.2300/ S8U731	80-89		R		**CF157**	Luc	Ø 25,40	Exc. Switzerland/Norway/Sweden
(52-55-59kW)	80-89				**PF289**		Ø 25,40	Exc. Switzerland/Norway/Sweden, Exc. Eletrique
2.5 D 28-35 Eng.Sofim-8140.67.2510/ S8U742	89-94		R		**CF157**	Luc	Ø 25,40	Exc. Switzerland/Norway/Sweden
(55kW)	10/94-12/97				**PF426**	Luc	Ø 25,40	
	89-94				**PF289**		Ø 25,40	Exc. Switzerland/Norway/Sweden, Exc. Eletrique
2.5 TD 28-35 Eng.Sofim-8140.27.2580/ S9U702	89-94		R		**CF157**	Luc	Ø 25,40	Exc. Switzerland/Norway/Sweden
(72kW)	10/94-12/97				**PF426**	Luc	Ø 25,40	
	89-94				**PF289**		Ø 25,40	Exc. Switzerland/Norway/Sweden, Exc. Eletrique
2.5 TD 35 Eng.Sofim-8140.27.2500/ .2510/ S9U714	89-94		R		**CF157**	Luc	Ø 25,40	Exc. Switzerland/Norway/Sweden
(55-69-73kW)	10/94-12/97				**PF426**	Luc	Ø 25,40	
	89-94				**PF289**		Ø 25,40	Exc. Switzerland/Norway/Sweden, Exc. Eletrique
Master II 7/98-9/03								
1.9 DCi 80 Eng.F9Q772 (60kW)	01-03		R	L	**CF325**		Ø 23,81	
	01-03		R	R	**CF326**		Ø 23,81	
	01-03				**PF503**	Bch	Ø 25,40	Alu, +ABS
	01-03				**PF502**	Bch	Ø 25,40	Alu, -ABS
1.9 DTi Eng.F9Q770 (59kW)	00-03		R	L	**CF325**		Ø 23,81	
	00-03		R	R	**CF326**		Ø 23,81	
	00-03				**PF503**	Bch	Ø 25,40	Alu, +ABS
	00-03				**PF502**	Bch	Ø 25,40	Alu, -ABS
2.2 DCi 90 Eng.G9T722 (66kW)	00-03				**PF503**	Bch	Ø 25,40	Alu, +ABS
	00-03				**PF502**	Bch	Ø 25,40	Alu, -ABS
2.5 D Eng.S8U770 (59kW)	98-01		R	L	**CF325**		Ø 23,81	
	98-01		R	R	**CF326**		Ø 23,81	
	98-01				**PF503**	Bch	Ø 25,40	Alu, +ABS
	98-01				**PF502**	Bch	Ø 25,40	Alu, -ABS
2.5 DCi 120 Eng.G9U720/ 754 (84kW)	01-03		R	L	**CF325**		Ø 23,81	
	01-03		R	R	**CF326**		Ø 23,81	
	01-03				**PF503**	Bch	Ø 25,40	Alu, +ABS
	01-03				**PF502**	Bch	Ø 25,40	Alu, -ABS
2.8 DTi Eng.S9W702 (84kW)	98-01		R	L	**CF325**		Ø 23,81	
	98-01		R	R	**CF326**		Ø 23,81	
	98-01				**PF503**	Bch	Ø 25,40	Alu, +ABS
	98-01				**PF502**	Bch	Ø 25,40	Alu, -ABS
Master III 10/03-1/10								
2.5 DCi Eng.G9U630 (107kW)	06-				**PF806**	Bch	Ø 23,81	Alu, +ABS
	06-				**PF502**	Bch	Ø 25,40	Alu, -ABS
2.5 DCi Eng.G9U632 (88kW)	06-				**PF806**	Bch	Ø 23,81	Alu, +ABS
	06-				**PF502**	Bch	Ø 25,40	Alu, -ABS
2.5 DCi Eng.G9U650 (74kW)	06-				**PF806**	Bch	Ø 23,81	Alu, +ABS
	06-				**PF502**	Bch	Ø 25,40	Alu, -ABS
2.5 DCi 100 Eng.G9U754 (73kW)	03-10				**PF806**	Bch	Ø 23,81	Alu, +ABS
	03-10				**PF502**	Bch	Ø 25,40	Alu, -ABS
3.0 DCi 120 Eng.ZD3A600 (85kW)	05-				**PF806**	Bch	Ø 23,81	Alu, +ABS
	05-				**PF502**	Bch	Ø 25,40	Alu, -ABS

RENAULT LCV

		Spare Parts	F/R	L/R	FRITECH ref.		DIMENSIONS mm.	NOTE
3.0 DCi 140 Eng.ZD3200/ 202 (100kW)	03-				**PF806**	Bch	Ø 23,81	Alu, +ABS
	03-				**PF502**	Bch	Ø 25,40	Alu, -ABS
3.0 DCi 160 Eng.ZD3A604 (115kW)	05-				**PF806**	Bch	Ø 23,81	Alu, +ABS
	05-				**PF502**	Bch	Ø 25,40	Alu, -ABS
Megane II Van 11/02-12/07								
1.5 DCi Eng.K9K724 (63kW)	05-				**PF585**	Trw	Ø 23,81	Alu
1.5 DCi Eng.K9K764 (78kW)	05-				**PF585**	Trw	Ø 23,81	Alu, -Pack Sportivo
Modus Van 12/04-12/13								
1.2 16v Eng.D4F740 (55kW)	04-		R		**CF780**	Loc	Ø 19,05	Alu, -ESP
1.5 DCi Eng.K9K750 (63kW)	04-		R		**CF780**	Loc	Ø 19,05	Alu, -ESP
1.5 DCi Eng.K9K752 (50kW)	04-		R		**CF780**	Loc	Ø 19,05	Alu, +ESP
R11 Van 3/83-12/88								
1.1 (S371) Eng.C1E715/ 720 (35kW)	83-86		R	L	**CF023**	Luc	Ø 17,78	Incl. Spain
	83-86		R	R	**CF024**	Luc	Ø 17,78	Incl. Spain
	83-86				**PF021**		Ø 19,05	Exc. Spain
	83-86				**PF001**		Ø 19,05	Spain
1.2 (S37S) Eng.C1G700/ 710 (40kW)	86-88		R	L	**CF025**	Bdx	Ø 20,64	CRCI
	84-86		R	L	**CF017**	Bdx	Ø 22,00	
	84-86		R	L	**CF012**	Luc	Ø 22,22	
	86-88		R	R	**CF026**	Bdx	Ø 20,64	CRCI
	84-86		R	R	**CF016**	Bdx	Ø 22,00	
	84-86		R	R	**CF013**	Luc	Ø 22,22	
	84-86				**PF001**		Ø 19,05	
	86-88				**PF021**		Ø 19,05	
1.4 (S372) Eng.C1J715/ 792/ 796/ C2J730	85-86		R	L	**CF017**	Bdx	Ø 22,00	Incl. Spain
(35-43-44kW)	85-86		R	L	**CF012**	Luc	Ø 22,22	Exc. Spain
	85-86		R	R	**CF016**	Bdx	Ø 22,00	Incl. Spain
	85-86		R	R	**CF013**	Luc	Ø 22,22	Exc. Spain
	83-86				**PF021**		Ø 19,05	Exc. Spain
	83-86				**PF001**		Ø 19,05	Spain
1.4 (S373) Eng.C2J768 (43-46-50-53kW)	85-86		R	L	**CF017**	Bdx	Ø 22,00	Incl. Spain
	85-86		R	L	**CF012**	Luc	Ø 22,22	Exc. Spain
	85-86		R	R	**CF016**	Bdx	Ø 22,00	Incl. Spain
	85-86		R	R	**CF013**	Luc	Ø 22,22	Exc. Spain
	83-86				**PF021**		Ø 19,05	Exc. Spain
	83-86				**PF001**		Ø 19,05	Spain
1.6 D (S374) Eng.F8M700/ 720/ 730 (40kW)	86-88		R	L	**CF025**	Bdx	Ø 20,64	CRCI, Exc. Spain
	83-86		R	L	**CF017**	Bdx	Ø 22,00	Spain
	83-86		R	L	**CF012**	Luc	Ø 22,22	
	86-88		R	R	**CF026**	Bdx	Ø 20,64	CRCI, Exc. Spain
	83-86		R	R	**CF016**	Bdx	Ø 22,00	Spain
	83-86		R	R	**CF013**	Luc	Ø 22,22	
	83-88				**PF021**		Ø 19,05	Exc. Spain
	83-88				**PF001**		Ø 19,05	Spain
R12 Van 7/75-4/80								
1.3 (2360) Eng.81002	75-80		R		**CF120**	Bdx	Ø 22,00	
(29-31-32-33-37-40-44-47kW)	75-80				**PF020**	Ate	Ø 19,05	
R18 Van 5/79-7/86								
1.4 (2350) Eng.847720/ 722 (35-43-46kW)	-86		R	L	**CF020**		Ø 22,00	Ch 3401-
	-86		R	R	**CF125**	Bdx	Ø 22,00	Ch 3401-
	79-		R		**CF020**		Ø 22,00	Ch -3400
	80-86				**PF020**	Ate	Ø 19,05	
2.1 D (2354) Eng.852710/ J8S711 (43-46-50-53kW)	81-86		R		**CF020**		Ø 22,00	
	81-86				**PF021**		Ø 19,05	
R19 I Van 1/88-12/92								
1.2 (S530) Eng.C1G730 (40kW)	4/91-4/92		R	L	**CF061**	Bdx	Ø 20,64	CRCI
	6/89-3/91		R	L	**CF062**	Bdx	Ø 20,64	CRCI
	4/91-4/92		R	L	**CF043**	Luc	Ø 20,64	CRCI
	4/91-4/92		R	R	**CF062**	Bdx	Ø 20,64	CRCI
	6/89-3/91		R	R	**CF061**	Bdx	Ø 20,64	CRCI
	4/91-4/92		R	R	**CF042**	Luc	Ø 20,64	CRCI
	89-9/91				**PF008**	Ate	Ø 19,00	-ABS
	10/91-4/92				**PF007**	Ate	Ø 20,64	

		Spare Parts	F/R	L/R	FRITECH ref.		DIMENSIONS mm.	NOTE
1.4 (S537) Eng.E7F700/ 706 (59kW)	4/91-4/92		R	L	**CF061**	Bdx	Ø 20,64	CRCI
	6/89-3/91		R	L	**CF062**	Bdx	Ø 20,64	CRCI
	4/91-4/92		R	L	**CF043**	Luc	Ø 20,64	CRCI
	4/91-4/92		R	R	**CF062**	Bdx	Ø 20,64	CRCI
	6/89-3/91		R	R	**CF061**	Bdx	Ø 20,64	CRCI
	4/91-4/92		R	R	**CF042**	Luc	Ø 20,64	CRCI
	89-9/91				**PF008**	Ate	Ø 19,00	-ABS
	10/91-4/92				**PF007**	Ate	Ø 20,64	
1.9 D (S534, I, J) Eng.F8Q706/ 742 (47-66-68kW)	4/91-4/92		R	L	**CF061**	Bdx	Ø 20,64	CRCI
	6/89-3/91		R	L	**CF062**	Bdx	Ø 20,64	CRCI
	4/91-4/92		R	L	**CF043**	Luc	Ø 20,64	CRCI
	4/91-4/92		R	R	**CF062**	Bdx	Ø 20,64	CRCI
	6/89-3/91		R	R	**CF061**	Bdx	Ø 20,64	CRCI
	4/91-4/92		R	R	**CF042**	Luc	Ø 20,64	CRCI
	89-9/91				**PF008**	Ate	Ø 19,00	-ABS
	10/91-4/92				**PF007**	Ate	Ø 20,64	-ABS
	10/91-4/92				**PF211**	Bdx	Ø 20,64	+ABS
R19 II Van 3/92-12/95								
1.2 (S530) Eng.C1G730 (40kW)	5/92-96		R	L	**CF061**	Bdx	Ø 20,64	CRCI
	5/92-96		R	L	**CF043**	Luc	Ø 20,64	CRCI
	5/92-96		R	R	**CF062**	Bdx	Ø 20,64	CRCI
	5/92-96		R	R	**CF042**	Luc	Ø 20,64	CRCI
	5/92-96				**PF007**	Ate	Ø 20,64	
1.4 (S537) Eng.E7F700/ 706 (58kW)	5/92-95		R	L	**CF061**	Bdx	Ø 20,64	CRCI
	5/92-95		R	L	**CF043**	Luc	Ø 20,64	CRCI
	5/92-95		R	R	**CF062**	Bdx	Ø 20,64	CRCI
	5/92-95		R	R	**CF042**	Luc	Ø 20,64	CRCI
	5/92-95				**PF007**	Ate	Ø 20,64	
1.9 D (S534) Eng.F8Q706/ 742 (47-66-68kW)	5/92-95		R	L	**CF061**	Bdx	Ø 20,64	CRCI
	5/92-95		R	L	**CF043**	Luc	Ø 20,64	CRCI
	5/92-95		R	R	**CF062**	Bdx	Ø 20,64	CRCI
	5/92-95		R	R	**CF042**	Luc	Ø 20,64	CRCI
	5/92-95				**PF007**	Ate	Ø 20,64	-ABS
	5/92-95				**PF211**	Bdx	Ø 20,64	+ABS
1.9 TD (S53K) Eng.F8Q706/ 742 (47-66-68kW)	92-95		R	L	**CF092**	Bdx	Ø 19,05	
	92-95		R	R	**CF093**	Bdx	Ø 19,05	
	92-95				**PF008**	Ate	Ø 19,00	-ABS
R21 Van 6/86-4/95								
1.7 (S481,482) Eng.F2N710 (65kW)	86-95		R	L	**CF021**	Luc	Ø 22,20	
	86-95		R	R	**CF022**	Luc	Ø 22,20	
	86-95				**PF008**	Ate	Ø 19,00	-ABS
	86-95				**PF170**	Ate	Ø 20,64	-ABS
1.9 D (S48H) Eng.F8Q710 (47kW)	86-		R	L	**CF032**	Bdx	Ø 22,00	Ch -S00005583, CRCI
			R	L	**CF065**	Bdx	Ø 22,00	Ch S00005584-, CRCI
	86-		R	R	**CF033**	Bdx	Ø 22,00	Ch -S00005583, CRCI
			R	R	**CF066**	Bdx	Ø 22,00	Ch S00005584-, CRCI
	86-94				**PF008**	Ate	Ø 19,00	-ABS
2.1 D (S486) Eng.J8S704 (48kW)	86-94		R	L	**CF021**	Luc	Ø 22,20	
	86-94		R	R	**CF022**	Luc	Ø 22,20	
	86-94				**PF008**	Ate	Ø 19,00	-ABS
	86-94				**PF170**	Ate	Ø 20,64	-ABS
R4 Van 9/66-12/93								
0.8 (2105,2102,2104) Eng.839 (19kW)			R		**CF054**		Ø 19,05	Ch -44278
	-82		R		**CF011**		Ø 20,64	Ch 44279-
	71-82				**PF133**		Ø 20,64	
	-82				**CT009**		Ø 12,00	Ch 44279-, Incl. Fourgonette
0.8 (2106) Eng.80001 (25kW)			R		**CF054**		Ø 19,05	Ch -21494
	-88		R		**CF011**		Ø 20,64	Ch 21495-
	66-76				**PF133**		Ø 20,64	
	76-88				**PF076**		Ø 20,64	
	-76				**CT009**		Ø 12,00	Ch 21495-, Incl. Fourgonette
0.8 (210B) Eng.80001 (25kW)	-89				**CT009**		Ø 12,00	Ch 25501-
0.8 (2391/2392) Eng.800705/ B1B707 (21kW)	83-89		F	L	**CF057**		Ø 23,81	
	83-89		F	R	**CF058**		Ø 23,81	

RENAULT LCV

		Spare Parts	F/R	L/R	FRITECH ref.		DIMENSIONS mm.	NOTE
0.8 (2391/2392) Eng.800705/ B1B707 (21kW)	83-89		R		**CF011**		Ø 20,64	
	83-89				**PF055**		Ø 19,05	
	83-89				**PF076**		Ø 20,64	
	83-89				**PF093**		Ø 20,64	
	83-89				**CT009**		Ø 12,00	Incl. Break
0.8 (2430) Eng.B1B705/ 707 (21kW)	71-10/77		R		**CF011**		Ø 20,64	Fourgonette
	10/77-89		R		**CF010**		Ø 22,00	Fourgonette
	71-76				**PF055**		Ø 19,05	Fourgonette
	76-89				**PF078**		Ø 20,64	Fourgonette
	71-89				**CT009**		Ø 12,00	Incl. Fourgonette
0.95 (2109) Eng.C1C708 (25-30-31-32-33kW)	87-93		R		**CF011**		Ø 20,64	
	87-93				**PF076**		Ø 20,64	
	87-93				**PF133**		Ø 20,64	
	87-93				**CT009**		Ø 12,00	Incl. Fourgonette
1.1 (2370) Eng.688711/ 712/ C1E714/ 718/ 719	10/77-89		R		**CF010**	Bdx	Ø 22,00	
(25-32-33-35kW)	7/82-89		R		**CF055**	Luc	Ø 22,22	
	76-10/77		R		**CF011**		Ø 20,64	Fourgonette
	7/82-				**PF118**		Ø 19,05	Ch -361750, Incl. Switzerland
	-89				**PF079**		Ø 19,05	Ch 361751-, Exc. Switzerland
	10/76-12/76				**PF055**		Ø 19,05	Fourgonette
	77-82				**PF078**		Ø 20,64	Fourgonette
	76-89				**CT009**		Ø 12,00	Incl. Fourgonette
1.1 (239B) Eng.C1E718/ 719 (26kW)	82-89		R		**CF010**	Bdx	Ø 22,00	
	82-89		R		**CF055**		Ø 22,22	
	82-				**PF118**		Ø 19,05	Ch -2180
	-89				**PF079**		Ø 19,05	Ch 2181-
	-89				**CT009**		Ø 12,00	Ch 2181-
1.1 (3C2370) Eng.688711/ 712/ C1E714/ 718/ 719	7/82-89		R		**CF010**	Bdx	Ø 22,00	
(25kW)	7/82-89		R		**CF055**	Luc	Ø 22,22	
	7/82-				**PF118**		Ø 19,05	Ch -361750
	-89				**PF079**		Ø 19,05	Ch 361751-
	-89				**CT009**		Ø 12,00	Ch 361751-
1.1 (S128) Eng.688712/ C1E714/ 719 (25kW)	76-89		R		**CF010**	Bdx	Ø 22,00	
	76-89		R		**CF055**	Luc	Ø 22,22	
	76-89				**PF079**		Ø 19,05	
	76-89				**CT009**		Ø 12,00	
R5 Van 1/72-12/85								
0.8 (2381) Eng.800710 (19-21-25-26-27kW)	77-84		F	L	**CF058**		Ø 23,81	
	77-84		F	R	**CF057**		Ø 23,81	
	82-84		R		**CF010**	Bdx	Ø 22,00	
	82-84		R		**CF055**	Luc	Ø 22,22	
	77-		R		**CF054**		Ø 19,05	Ch -11591
	-82		R		**CF011**		Ø 20,64	Ch 11592-
	82-84				**PF079**		Ø 19,05	Incl. France
	6/80-82				**PF093**		Ø 20,64	Incl. France
	77-6/80				**PF076**		Ø 20,64	
	82-84				**CT010**		Ø 12,00	
0.95 (2382) Eng.689710 (25-30-31-32-33kW)	72-6/76				**PF054**		Ø 19,05	France
	78-85				**PF079**		Ø 19,05	
					PF093		Ø 20,64	Ch 2761-, Denmark
	7/76-78				**PF077**		Ø 20,64	France/Denmark
1.1 (2386) Eng.688711/ 712/ 713/ C1E726	80-85		R		**CF010**	Bdx	Ø 22,00	
(25-33-35kW)	80-85		R		**CF055**	Luc	Ø 22,22	
	80-85				**PF020**	Ate	Ø 19,05	
	80-85				**CT010**		Ø 12,00	
1.3 (2387) Eng.810726	7/79-82		R		**CF010**	Bdx	Ø 22,00	
(29-31-32-33-37-40-44-47kW)	7/79-82		R		**CF055**	Luc	Ø 22,22	
	7/79-82				**PF020**	Ate	Ø 19,05	
	7/79-82				**CT010**		Ø 12,00	
Rapid/Express (F40, G40) Van 7/85-8/98								
0.95 (F400) Eng.C1C706 (25-30-31-32-33kW)	86-92		R	L	**CF017**	Bdx	Ø 22,00	
	86-92		R	L	**CF012**	Luc	Ø 22,22	
	86-92		R	R	**CF016**	Bdx	Ø 22,00	
	86-92		R	R	**CF013**	Luc	Ø 22,22	

		Spare Parts	F/R	L/R	FRITECH ref.		DIMENSIONS mm.	NOTE
0.95 (F400) Eng.C1C706 (25-30-31-32-33kW)	86-92				**PF008**	Ate	Ø 19,00	-ABS, RHD
	86-92				**PF127**		Ø 17,46	LHD
1.1 (F401) Eng.C1E750/ 752/ 760/ 762/ 792 (34kW)	85-95		R	L	**CF069**	Bdx	Ø 22,00	Italy
	85-95		R	L	**CF017**	Bdx	Ø 22,00	Exc. Italy
	85-95		R	L	**CF012**	Luc	Ø 22,22	Exc. Italy
	85-95		R	R	**CF081**	Bdx	Ø 22,00	Italy
	85-95		R	R	**CF016**	Bdx	Ø 22,00	Exc. Italy
	85-95		R	R	**CF013**	Luc	Ø 22,22	Exc. Italy
	85-95				**PF008**	Ate	Ø 19,00	-ABS
1.1 (F40H) Eng.C1E756 (25-33-35kW)	87-91		R	L	**CF069**	Bdx	Ø 22,00	Italy
	87-91		R	L	**CF017**	Bdx	Ø 22,00	Exc. Italy
	87-91		R	L	**CF012**	Luc	Ø 22,22	Exc. Italy
	87-91		R	R	**CF081**	Bdx	Ø 22,00	Italy
	87-91		R	R	**CF016**	Bdx	Ø 22,00	Exc. Italy
	87-91		R	R	**CF013**	Luc	Ø 22,22	Exc. Italy
	87-91				**PF008**	Ate	Ø 19,00	-ABS
1.2 (F406, G40A) Eng.C3G710/ 712 (40kW)	91-98		R	L	**CF059**	Bdx	Ø 20,64	
	91-98		R	R	**CF060**	Bdx	Ø 20,64	
	91-98				**PF007**	Ate	Ø 20,64	
1.2 (F40F) Eng.C1G726 (40-55kW)	91-98		R	L	**CF059**	Bdx	Ø 20,64	
	91-98		R	R	**CF060**	Bdx	Ø 20,64	
	91-98				**PF008**	Ate	Ø 19,00	-ABS
1.4 Eng.E6J734 (44kW)	91-93		R	L	**CF069**	Bdx	Ø 22,00	Exc. France
	91-93		R	R	**CF081**	Bdx	Ø 22,00	Italy
1.4 (F40) Eng.E7J770/ 771 (55kW)	96-98		R	L	**CF059**	Bdx	Ø 20,64	
	96-98		R	R	**CF060**	Bdx	Ø 20,64	
	96-98		R		**CF089**	Luc	Ø 22,20	IP
	96-98				**PF007**	Ate	Ø 20,64	
1.4 (F402) Eng.C1J768/ 780 (35-43-44kW)	1/89-8/91		R	L	**CF059**	Bdx	Ø 20,64	
	85-12/88		R	L	**CF069**	Bdx	Ø 22,00	Austria/Switzerland
	1/89-8/91		R	R	**CF060**	Bdx	Ø 20,64	
	85-12/88		R	R	**CF081**	Bdx	Ø 22,00	Austria/Switzerland
	85-8/91				**PF008**	Ate	Ø 19,00	-ABS
1.4 (F407) Kat Eng.C3J700/ 702/ 760/ 762 (43kW)	88-98		R	L	**CF059**	Bdx	Ø 20,64	
	-12/88		R	L	**CF069**	Bdx	Ø 22,00	Exc. France
	88-98		R	R	**CF060**	Bdx	Ø 20,64	
	-12/88		R	R	**CF081**	Bdx	Ø 22,00	Exc. France
	88-98				**PF008**	Ate	Ø 19,00	-ABS
1.4 (F40D) Eng.E7J728 (58kW)	94-98		R	L	**CF059**	Bdx	Ø 20,64	
	94-98		R	R	**CF060**	Bdx	Ø 20,64	
	94-98		R		**CF089**	Luc	Ø 22,20	IP
	94-98				**PF007**	Ate	Ø 20,64	
1.4 (F40M) Eng.C2J784 (43-46-50-53kW)	1/89-8/91		R	L	**CF059**	Bdx	Ø 20,64	
	86-12/88		R	L	**CF069**	Bdx	Ø 22,00	Austria/Switzerland
	1/89-8/91		R	R	**CF060**	Bdx	Ø 20,64	
	86-12/88		R	R	**CF081**	Bdx	Ø 22,00	Austria/Switzerland
	86-8/91				**PF008**	Ate	Ø 19,00	-ABS
1.4 (F40U, F40V) Eng.E7J720/ 724/ 726/ 773	91-98		R	L	**CF059**	Bdx	Ø 20,64	
(43-52-55kW)	91-98		R	R	**CF060**	Bdx	Ø 20,64	
	91-98		R		**CF089**	Luc	Ø 22,20	IP
	91-98				**PF007**	Ate	Ø 20,64	
1.6 D (F404) Eng.F8M730/ 736/ 760 (40kW)	1/89-98		R	L	**CF059**	Bdx	Ø 20,64	
	86-12/88		R	L	**CF069**	Bdx	Ø 22,00	Exc. France
	86-12/88		R	L	**CF017**	Bdx	Ø 22,00	France
	86-8/91		R	L	**CF012**	Luc	Ø 22,22	France
	1/89-98		R	R	**CF060**	Bdx	Ø 20,64	
	86-12/88		R	R	**CF081**	Bdx	Ø 22,00	Exc. France
	86-12/88		R	R	**CF016**	Bdx	Ø 22,00	France
	86-8/91		R	R	**CF013**	Luc	Ø 22,22	France
	9/91-98		R		**CF089**	Luc	Ø 22,20	IP
	86-8/91				**PF008**	Ate	Ø 19,00	-ABS
	9/91-98				**PF007**	Ate	Ø 20,64	

RENAULT LCV

		Spare Parts	F/R	L/R	FRITECH ref.		DIMENSIONS mm.	NOTE
1.9 D (F40P/N/E) Eng.F8Q722/ 724/ 774/ 776	9/91-98		R	L	**CF059**	Bdx	Ø 20,64	
(47-66-68kW)	9/91-98		R	R	**CF060**	Bdx	Ø 20,64	
	9/91-98		R		**CF089**	Luc	Ø 22,20	IP
	9/91-98				**PF007**	Ate	Ø 20,64	
1.9 D (F40R) Eng.F8Q640/ 682 (40kW)	94-98		R	L	**CF059**	Bdx	Ø 20,64	
	94-98		R	R	**CF060**	Bdx	Ø 20,64	
	94-98		R		**CF089**	Luc	Ø 22,20	IP
	94-98				**PF007**	Ate	Ø 20,64	
All models (Spain) Eng.C3G710/ 712 (40kW)	91-98		R	L	**CF098**		Ø 22,00	Spain
	91-98		R	R	**CF099**		Ø 22,00	Spain
	91-98				**PF008**	Ate	Ø 19,00	Spain, -ABS
Super 5 (S40) Van 10/84-12/96								
0.95 (S400) Eng.C1C688/ 689/ 700 (30kW)	6/87-10/88		R	L	**CF073**	Bdx	Ø 20,64	CRCI, Exc. Spain
	84-5/87		R	L	**CF017**	Bdx	Ø 22,00	Exc. Spain
	1/88-10/88		R	L	**CF042**	Luc	Ø 20,64	CRCI, Exc. Spain
	84-12/87		R	L	**CF012**	Luc	Ø 22,22	Exc. Spain
	6/87-10/88		R	L	**CF098**		Ø 22,00	Spain
	6/87-10/88		R	R	**CF072**	Bdx	Ø 20,64	CRCI, Exc. Spain
	84-5/87		R	R	**CF016**	Bdx	Ø 22,00	Exc. Spain
	1/88-10/88		R	R	**CF043**	Luc	Ø 20,64	CRCI, Exc. Spain
	84-12/87		R	R	**CF013**	Luc	Ø 22,22	Exc. Spain
	6/87-10/88		R	R	**CF099**		Ø 22,00	Spain
	85-92				**PF008**	Ate	Ø 19,00	-ABS, RHD
	85-92				**PF127**		Ø 17,46	LHD
1.1 (S401) Eng.C1E750/ 752/ 754 (34kW)	6/87-96		R	L	**CF073**	Bdx	Ø 20,64	CRCI, Exc. Spain
	84-5/87		R	L	**CF017**	Bdx	Ø 22,00	Exc. Spain
	1/88-96		R	L	**CF042**	Luc	Ø 20,64	CRCI, Exc. Spain
	84-12/87		R	L	**CF012**	Luc	Ø 22,22	Exc. Spain
	6/87-96		R	L	**CF098**		Ø 22,00	Spain
	6/87-96		R	R	**CF072**	Bdx	Ø 20,64	CRCI, Exc. Spain
	84-5/87		R	R	**CF016**	Bdx	Ø 22,00	Exc. Spain
	1/88-96		R	R	**CF043**	Luc	Ø 20,64	CRCI, Exc. Spain
	84-12/87		R	R	**CF013**	Luc	Ø 22,22	Exc. Spain
	6/87-96		R	R	**CF099**		Ø 22,00	Spain
	84-96				**PF008**	Ate	Ø 19,00	-ABS
1.2 (S40F) Eng.C1G702/ 720/ 722 (40kW)	87-96		R	L	**CF073**	Bdx	Ø 20,64	CRCI, Exc. Spain
	1/88-96		R	L	**CF042**	Luc	Ø 20,64	CRCI, Exc. Spain
	1/87-12/87		R	L	**CF012**	Luc	Ø 22,22	Exc. Spain
	87-96		R	L	**CF098**		Ø 22,00	Spain
	87-96		R	R	**CF072**	Bdx	Ø 20,64	CRCI, Exc. Spain
	1/88-96		R	R	**CF043**	Luc	Ø 20,64	CRCI, Exc. Spain
	1/87-12/87		R	R	**CF013**	Luc	Ø 22,22	Exc. Spain
	87-96		R	R	**CF099**		Ø 22,00	Spain
	87-96				**PF008**	Ate	Ø 19,00	-ABS
1.2 (S40F, S407) Eng.C1G702 (44kW)	6/87-96		R	L	**CF073**	Bdx	Ø 20,64	CRCI, Exc. Spain
	1/87-5/87		R	L	**CF017**	Bdx	Ø 22,00	Exc. Spain
	1/88-96		R	L	**CF042**	Luc	Ø 20,64	CRCI, Exc. Spain
	1/87-12/87		R	L	**CF012**	Luc	Ø 22,22	Exc. Spain
	6/87-96		R	L	**CF098**		Ø 22,00	Spain
	6/87-96		R	R	**CF072**	Bdx	Ø 20,64	CRCI, Exc. Spain
	1/87-5/87		R	R	**CF016**	Bdx	Ø 22,00	Exc. Spain
	1/88-96		R	R	**CF043**	Luc	Ø 20,64	CRCI, Exc. Spain
	1/87-12/87		R	R	**CF013**	Luc	Ø 22,22	Exc. Spain
	6/87-96		R	R	**CF099**		Ø 22,00	Spain
	87-96				**PF008**	Ate	Ø 19,00	-ABS
1.6 D (S404) Eng.F8M720/ 730 (40kW)	6/87-96		R	L	**CF073**	Bdx	Ø 20,64	CRCI, Exc. Spain
	84-5/87		R	L	**CF017**	Bdx	Ø 22,00	Exc. Spain
	1/88-96		R	L	**CF042**	Luc	Ø 20,64	CRCI, Exc. Spain
	84-12/87		R	L	**CF012**	Luc	Ø 22,22	Exc. Spain
	6/87-96		R	L	**CF098**		Ø 22,00	Spain
	6/87-96		R	R	**CF072**	Bdx	Ø 20,64	CRCI, Exc. Spain
	84-5/87		R	R	**CF016**	Bdx	Ø 22,00	Exc. Spain
	1/88-96		R	R	**CF043**	Luc	Ø 20,64	CRCI, Exc. Spain
	84-12/87		R	R	**CF013**	Luc	Ø 22,22	Exc. Spain

		Spare Parts	F/R	L/R	FRITECH ref.		DIMENSIONS mm.	NOTE
1.6 D (S404) Eng.F8M720/ 730 (40kW)	6/87-96		R	R	**CF099**		Ø 22,00	Spain
	84-96				**PF008**	Ate	Ø 19,00	-ABS
Trafic I (P6) 3/80-4/89								
1.4 Eng.847700/ 701/ C1J700 (35-43-44kW)	80-89		R		**CF225**	Bdx	Ø 23,81	
	80-89				**PF405**	Ate	Ø 20,64	
1.6, 4WD Eng.841705/ A1M705/ 707/ 708	84-86		R		**CF225**	Bdx	Ø 23,81	
(47-66-68kW)	84-86				**PF405**	Ate	Ø 20,64	
1.7 Eng.F1N720/ 722/ 724 (50kW)	-2/89		R		**CF250**	Luc	Ø 25,40	Ch 5151-
	86-				**PF405**	Ate	Ø 20,64	Ch -5150
2.0 Eng.829720/ 721 (63kW)	80-86		R		**CF225**	Bdx	Ø 23,81	
	80-86				**PF405**	Ate	Ø 20,64	
2.0, 4WD Eng.J5R716/ 722/ 726 (58-63-76-81kW)	-2/89		R		**CF250**	Luc	Ø 25,40	Ch 5151-
	80-89				**PF405**	Ate	Ø 20,64	
2.1 D, 4WD Eng.852720/ 750 (43-49kW)	-2/89		R		**CF250**	Luc	Ø 25,40	Ch 5151-
	80-89				**PF405**	Ate	Ø 20,64	
2.4 D Eng.Sofim-8140.61.240/ S8U720/ 722 (51kW)	80-89		R		**CF225**	Bdx	Ø 23,81	
	-2/89		R		**CF250**	Luc	Ø 25,40	Ch 5151-
Trafic I Bus 3/80-4/89								
1.4 Eng.847700/ 701/ C1J700 (35kW)	80-		R		**CF225**	Bdx	Ø 23,81	Ch -5150, 10Q
	80-89				**PF405**	Ate	Ø 20,64	
1.6, 4WD Eng.841705/ A1M705/ 707/ 708	84-		R		**CF225**	Bdx	Ø 23,81	Ch -5150, 10Q
(47-66-68kW)	84-86				**PF405**	Ate	Ø 20,64	
1.7 Eng.F1N720/ 722/ 724 (50kW)	86-		R		**CF225**	Bdx	Ø 23,81	Ch -5150, 10Q
	86-89				**PF405**	Ate	Ø 20,64	
2.0, 4WD Eng.J5R716/ 722/ 726 (58-63-76-81kW)	80-		R		**CF225**	Bdx	Ø 23,81	Ch -5150, 10Q
	80-89				**PF405**	Ate	Ø 20,64	
2.1 D Eng.852720/ 750 (43-49kW)	80-		R		**CF225**	Bdx	Ø 23,81	Ch -5150, 10Q
	-2/89		R		**CF250**	Luc	Ø 25,40	Ch 5151-
	80-				**PF405**	Ate	Ø 20,64	Ch -5150
Trafic I Van 3/80-4/89								
1.4 Eng.847700/ 701/ C1J700 (35kW)	80-89		R		**CF125**	Bdx	Ø 22,00	
	2/89-4/89		R		**CF225**	Bdx	Ø 23,81	10-13Q
	-2/89		R		**CF250**	Luc	Ø 25,40	Ch 5151-
	80-89				**PF405**	Ate	Ø 20,64	10Q
1.6, 4WD Eng.841705/ A1M705/ 707/ 708	84-86		R		**CF125**	Bdx	Ø 22,00	
(47-66-68kW)			R		**CF250**	Luc	Ø 25,40	Ch 5151-
	84-86				**PF405**	Ate	Ø 20,64	10Q
1.7 Eng.F1N720/ 722/ 724 (50kW)	2/89-4/89		R		**CF225**	Bdx	Ø 23,81	10-13Q
	-2/89		R		**CF250**	Luc	Ø 25,40	Ch 5151-
	86-89				**PF405**	Ate	Ø 20,64	10Q
2.0, 4WD Eng.J5R716/ 722/ 726 (58-63-76-81kW)	80-89		R		**CF125**	Bdx	Ø 22,00	
	80-89		R		**CF125**	Bdx	Ø 22,00	
	2/89-4/89		R		**CF225**	Bdx	Ø 23,81	10-13Q
	-2/89		R		**CF250**	Luc	Ø 25,40	Ch 5151-
	80-89				**PF405**	Ate	Ø 20,64	10Q (Exc. Ambulance)
2.1 D, 4WD Eng.852720/ 750 (43kW)	80-89		R		**CF125**	Bdx	Ø 22,00	
	2/89-4/89		R		**CF225**	Bdx	Ø 23,81	10-13Q
	-2/89		R		**CF250**	Luc	Ø 25,40	Ch 5151-
	80-89				**PF405**	Ate	Ø 20,64	Exc. Austria/Denmark/Switzerland, 10Q
Trafic II (PXX) 5/89-3/01								
1.7 Eng.F1N720/ 722/ 724 (50kW)	89-94		R		**CF250**	Luc	Ø 25,40	
	89-94				**PF405**	Ate	Ø 20,64	9Q
2.0 Eng.J5R716/ 726 (59kW)	89-97		R		**CF250**	Luc	Ø 25,40	
2.1 D Eng.852720/ 750 (43kW)	89-94		R		**CF250**	Luc	Ø 25,40	
	89-94				**PF405**	Ate	Ø 20,64	9Q
2.1 D Eng.J8S620/ 758 (47kW)	94-97		R		**CF250**	Luc	Ø 25,40	
	94-97				**PF405**	Ate	Ø 20,64	9Q
2.4 D Eng.Sofim-8140.61.240/ S8U720/ 722 (51kW)	89-01		R		**CF225**	Bdx	Ø 23,81	
	89-01		R		**CF250**	Luc	Ø 25,40	

RENAULT LCV

		Spare Parts	F/R	L/R	FRITECH ref.		DIMENSIONS mm.	NOTE
2.5 D Eng.Sofim-8140.67.2500/ .2550/ .2580/ S8U750/ 752 (55kW)	89-98		R		**CF250**	Luc	Ø 25,40	
Trafic II Bus (TXW) 5/89-3/01								
1.7 Eng.F1N720/ 722/ 724 (50kW)	89-94		R		**CF225**	Bdx	Ø 23,81	
	89-94		R		**CF250**	Luc	Ø 25,40	
1.9 D Eng.F8Q606/ 630/ 662 (44kW)	97-01		R		**CF250**	Luc	Ø 25,40	+ABS
	97-01				**PF504**	Bch	Ø 23,81	Alu, -ABS
2.0 Eng.J5R716/ 726 (59kW)	89-97		R		**CF125**	Bdx	Ø 22,00	
	89-97		R		**CF225**	Bdx	Ø 23,81	
	89-97		R		**CF250**	Luc	Ø 25,40	
2.1 D Eng.852720/ 750 (43kW)	89-94		R		**CF225**	Bdx	Ø 23,81	
	89-94		R		**CF250**	Luc	Ø 25,40	
2.1 D Eng.J8S620/ 758 (47kW)	94-97		R		**CF225**	Bdx	Ø 23,81	
	94-97		R		**CF250**	Luc	Ø 25,40	+ABS
2.2, 4WD Eng.J7T600 (74kW)	94-97		R		**CF250**	Luc	Ø 25,40	
2.2, 4WD Eng.J7T780 (70kW)	89-94		R		**CF250**	Luc	Ø 25,40	
2.5 D, 4WD Eng.Sofim-8140.67.2500/ .2550/ .2580/ S8U750/ 752 (55kW)	89-01		R		**CF250**	Luc	Ø 25,40	
Trafic II Van (TXX) 5/89-3/01								
1.4 Eng.C1J700 (35kW)	89-91		R		**CF125**	Bdx	Ø 22,00	
	89-91				**PF405**	Ate	Ø 20,64	9Q
1.7 Eng.F1N720/ 722/ 724 (50kW)	89-94		R		**CF225**	Bdx	Ø 23,81	RHD
	89-94		R		**CF250**	Luc	Ø 25,40	
	89-94				**PF405**	Ate	Ø 20,64	9Q
1.9 D Eng.F8Q606/ 630/ 662 (44kW)	97-01		R		**CF225**	Bdx	Ø 23,81	10-11Q
	97-01		R		**CF250**	Luc	Ø 25,40	+ABS
	97-01				**PF504**	Bch	Ø 23,81	Alu, -ABS
2.0 Eng.J5R716/ 726 (59kW)	89-97		R		**CF250**	Luc	Ø 25,40	
	89-97				**PF405**	Ate	Ø 20,64	9Q
2.1 D Eng.852720/ 750 (43kW)	89-94		R		**CF125**	Bdx	Ø 22,00	RHD
	89-94		R		**CF250**	Luc	Ø 25,40	
	89-94				**PF405**	Ate	Ø 20,64	9Q
2.1 D Eng.J8S620/ 758 (47kW)	94-97		R		**CF225**	Bdx	Ø 23,81	0.9-10-11-14-19Q
	94-97		R		**CF250**	Luc	Ø 25,40	+ABS
	94-97				**PF405**	Ate	Ø 20,64	9Q
2.2, 4WD Eng.J7T600 (74kW)	94-97		R		**CF250**	Luc	Ø 25,40	
2.2, 4WD Eng.J7T780 (70kW)	89-94		R		**CF250**	Luc	Ø 25,40	
2.5 D Eng.S8U750 (56kW)	89-94		R		**CF125**	Bdx	Ø 22,00	RHD
	89-94		R		**CF250**	Luc	Ø 25,40	
2.5 D, 4WD Eng.Sofim-8140.67.2500/ .2550/ .2580/ S8U750/ 752 (55kW)	89-01		R		**CF125**	Bdx	Ø 22,00	RHD
	89-01		R		**CF250**	Luc	Ø 25,40	
	89-01				**PF405**	Ate	Ø 20,64	9Q
Trafic III (EL, FL, JL) 3/01-4/14								
1.9 DCi Eng.F9Q760 (74kW)	01-				**PF622**	Trw	Ø 25,40	Alu, +ESP, +TC
	01-				**PF624**	Trw	Ø 20,64	Ch -4V602167, Alu, -ESP, -TC
	01-				**PF623**	Trw	Ø 20,64	Ch 4V602168-, Alu, -ESP, +TC
	01-				**PF620**	Trw	Ø 25,40	Ch -4V602167, Alu, -ESP, -TC
	01-				**PF621**	Trw	Ø 25,40	Ch 4V602168-, Alu, -ESP, -TC
1.9 DCi Eng.F9Q762 (60kW)	01-				**PF622**	Trw	Ø 25,40	Alu, +ESP, +TC
	01-				**PF624**	Trw	Ø 20,64	Ch -4V602167, Alu, -ESP, -TC
	01-				**PF623**	Trw	Ø 20,64	Ch 4V602168-, Alu, -ESP, +TC
	01-				**PF620**	Trw	Ø 25,40	Ch -4V602167, Alu, -ESP, -TC
	01-				**PF621**	Trw	Ø 25,40	Ch 4V602168-, Alu, -ESP, -TC
2.0 Eng.F4R720/ 722 (88kW)	01-				**PF622**	Trw	Ø 25,40	Alu, +ESP, +TC
	01-				**PF624**	Trw	Ø 20,64	Ch -4V602167, Alu, -ESP, -TC
	01-				**PF623**	Trw	Ø 20,64	Ch 4V602168-, Alu, -ESP, +TC
	01-				**PF620**	Trw	Ø 25,40	Ch -4V602167, Alu, -ESP, -TC
	01-				**PF621**	Trw	Ø 25,40	Ch 4V602168-, Alu, -ESP, -TC
2.0 16v Eng.F4R820 (86kW)	06-				**PF978**	Trw	Ø 20,64	+ABS, -ESP
	06-				**PF979**		Ø 20,64	Ch 7V6000001-, +ABS, +ESP
	06-				**PF980**		Ø 20,64	Ch 7V6000001-, -ABS

		Spare Parts	F/R	L/R	FRITECH ref.		DIMENSIONS mm.	NOTE
2.0 DCi Eng.M9R780 (66kW)	06-				**PF978**	Trw	Ø 20,64	+ABS, -ESP
	06-				**PF622**	Trw	Ø 25,40	Alu, +ESP, +TC
	01-				**PF623**	Trw	Ø 20,64	Ch 4V602168-, Alu, -ESP, +TC
	06-				**PF620**	Trw	Ø 25,40	Ch -4V602167, Alu, -ESP, -TC
	06-				**PF621**	Trw	Ø 25,40	Ch 4V602168-, Alu, -ESP, -TC
	06-				**PF979**		Ø 20,64	Ch 7V6000001-, +ABS, +ESP
	06-				**PF980**		Ø 20,64	Ch 7V6000001-, -ABS
2.0 DCi Eng.M9R780 (84kW)	06-				**PF978**	Trw	Ø 20,64	+ABS, -ESP
	06-				**PF622**	Trw	Ø 25,40	Alu, +ESP, +TC
	01-				**PF623**	Trw	Ø 20,64	Ch 4V602168-, Alu, -ESP, +TC
	06-				**PF620**	Trw	Ø 25,40	Ch -4V602167, Alu, -ESP, -TC
	06-				**PF621**	Trw	Ø 25,40	Ch 4V602168-, Alu, -ESP, -TC
	06-				**PF979**		Ø 20,64	Ch 7V6000001-, +ABS, +ESP
	06-				**PF980**		Ø 20,64	Ch 7V6000001-, -ABS
2.5 DCi 150 Eng.G9U630 (107kW)	03-				**PF978**	Trw	Ø 20,64	+ABS, -ESP
	06-				**PF622**	Trw	Ø 25,40	Alu, +ESP, +TC
	06-				**PF623**	Trw	Ø 20,64	Ch 4V602168-, Alu, -ESP, +TC
	06-				**PF620**	Trw	Ø 25,40	Ch -4V602167, Alu, -ESP, -TC
	06-				**PF621**	Trw	Ø 25,40	Ch 4V602168-, Alu, -ESP, -TC
	03-				**PF979**		Ø 20,64	Ch 7V6000001-, +ABS, +ESP
	03-				**PF980**		Ø 20,64	Ch 7V6000001-, -ABS
2.5 DTi Eng.G9U730 (99kW)	03-				**PF622**	Trw	Ø 25,40	Alu, +ESP, +TC
	03-				**PF624**	Trw	Ø 20,64	Ch -4V602167, Alu, -ESP, -TC
	03-				**PF623**	Trw	Ø 20,64	Ch 4V602168-, Alu, -ESP, +TC
	03-				**PF620**	Trw	Ø 25,40	Ch -4V602167, Alu, -ESP, -TC
	03-				**PF621**	Trw	Ø 25,40	Ch 4V602168-, Alu, -ESP, -TC
Twingo (S06) Van 3/93-								
1.2 (S063, S064) Eng.C3G700/ 702 (40kW)	93-96		R	L	**CF072**	Bdx	Ø 20,64	CRCI, -ABS
	93-96		R	R	**CF073**	Bdx	Ø 20,64	CRCI, -ABS
	93-96		R		**CF122**		Ø 20,64	+ABS
	93-96				**PF211**	Bdx	Ø 20,64	+ABS
	93-96				**PF134**		Ø 20,64	-ABS
1.2 (S066, S068) Eng.D7F700/ 701/ 702/ 703/ 704/ 706 (40-43kW)	5/96-		R	L	**CF072**	Bdx	Ø 20,64	CRCI, -ABS
	5/96-		R	R	**CF073**	Bdx	Ø 20,64	CRCI, -ABS
	7/98-		R		**CF161**	Luc	Ø 17,78	+ABS
	5/96-6/98		R		**CF122**		Ø 20,64	+ABS
	5/96-				**PF211**	Bdx	Ø 20,64	+ABS
	5/96-				**PF134**		Ø 20,64	-ABS

ROVER

100 (METRO) (Xp) 3/90-12/98								
111, Cabrio Eng.11K2A/ D (44kW)	90-98		R		**CF091**	Loc	Ø 17,46	
114 D Eng.TUD3 (38kW)	92-94		R		**CF091**	Loc	Ø 17,46	
114 GTI 16v, GSi, Cabrio Eng.14K4F (76kW)	91-98		R		**CF091**	Loc	Ø 17,46	
114 GTI/GT 16v, Kat Eng.14K4C/ D (66-69-70kW)	90-98		R		**CF091**	Loc	Ø 17,46	
114, Cabrio Eng.14K2A/ D (55kW)	90-98		R		**CF091**	Loc	Ø 17,46	
115 D Eng.TUD5 (42kW)	94-98		R		**CF091**	Loc	Ø 17,46	
1000-Series Mk II 1/67-12/78								
1.1 Eng.10H (33-36-40-41kW)	70-74		R		**CF348**		Ø 20,32	
1.3 (39kW)	70-74		R		**CF348**		Ø 20,32	
1.5 Eng.1EH/ 1EL (42-49kW)	74-77		R		**CF380**		Ø 17,46	
1.5 Eng.GFM11 (53kW)	70-77		R		**CF417**		Ø 17,78	Alu
200 I (XH) 3/85-9/89								
213 Eng.EV2 (54kW)	85-89		R	L	**CF206**		Ø 19,05	Alu
	85-89		R	R	**CF207**		Ø 19,05	Alu
	85-89				**PF130**		Ø 20,64	Alu
216 EFi Eng.16H (61kW)	85-89		R	L	**CF408**	Luc	Ø 17,46	Alu
	85-89		R	R	**CF409**	Luc	Ø 17,46	Alu
216 Vitesse Eng.16H (75kW)	85-89		R	L	**CF408**	Luc	Ø 17,46	Alu
	85-89		R	R	**CF409**	Luc	Ø 17,46	Alu
200 II (XW), Coupe 10/89-11/99								
214 Eng.14K2A/ D (55kW)	93-95		R	L	**CF235**	Luc	Ø 19,05	Alu
	93-95		R	R	**CF234**	Luc	Ø 19,05	Alu
	93-95				**PF224**	Luc	Ø 22,20	RHD

ROVER

		Spare Parts	F/R	L/R	FRITECH ref.		DIMENSIONS mm.	NOTE
214 16v Si, GSi, Cabrio Eng.14K4F (76kW)	93-99		R	L	**CF235**	Luc	Ø 19,05	Alu
	93-99		R	R	**CF234**	Luc	Ø 19,05	Alu
	93-99				**PF224**	Luc	Ø 22,20	RHD
214 Si, Gsi, Cabrio Eng.14K4C (66-70kW)	90-95		R	L	**CF235**	Luc	Ø 19,05	Alu
	90-95		R	R	**CF234**	Luc	Ø 19,05	Alu
214, Si, GSi, Cabrio Eng.14K4C/ D (66kW)	89-99		R	L	**CF235**	Luc	Ø 19,05	Alu
	89-99		R	R	**CF234**	Luc	Ø 19,05	Alu
	89-99				**PF224**	Luc	Ø 22,20	RHD
216 16v Cabrio Eng.16K4F (82kW)	96-99		R	L	**CF235**	Luc	Ø 19,05	Alu
	96-99		R	R	**CF234**	Luc	Ø 19,05	Alu
	96-99				**PF224**	Luc	Ø 22,20	RHD
216 GSi Eng.D16A7 (85kW)	89-95		R	L	**CF235**	Luc	Ø 19,05	Alu
	89-95		R	R	**CF234**	Luc	Ø 19,05	Alu
216 GSi Eng.D16Z2 (82kW)	89-95		R	L	**CF235**	Luc	Ø 19,05	Alu
	89-95		R	R	**CF234**	Luc	Ø 19,05	Alu
216, GTi, Cabrio Eng.D16A8 (90kW)	90-99		R	L	**CF235**	Luc	Ø 19,05	Alu
	90-99		R	R	**CF234**	Luc	Ø 19,05	Alu
	90-99				**PF224**	Luc	Ø 22,20	RHD
218 D Eng.XUD9AL (49-52kW)	91-95		R	L	**CF235**	Luc	Ø 19,05	Alu
	91-95		R	R	**CF234**	Luc	Ø 19,05	Alu
	91-95				**PF224**	Luc	Ø 22,20	RHD
218 TD Eng.XUD7TE (65kW)	91-95		R	L	**CF235**	Luc	Ø 19,05	Alu
	91-95		R	R	**CF234**	Luc	Ø 19,05	Alu
	91-95				**PF224**	Luc	Ø 22,20	RHD
220 GTi Eng.20M4F (103kW)	91-95		R	L	**CF235**	Luc	Ø 19,05	Alu
	91-95		R	R	**CF234**	Luc	Ø 19,05	Alu
	91-95				**PF224**	Luc	Ø 22,20	RHD
220 GTi, GSi Eng.20T4H (100kW)	93-99		R	L	**CF235**	Luc	Ø 19,05	Alu
	93-99		R	R	**CF234**	Luc	Ø 19,05	Alu
	93-99				**PF224**	Luc	Ø 22,20	RHD
220 T. Eng.20T4G (147kW)	93-95		R	L	**CF235**	Luc	Ø 19,05	Alu
	93-95		R	R	**CF234**	Luc	Ø 19,05	Alu
	93-95				**PF224**	Luc	Ø 22,20	RHD
200 III (RF) 11/95-3/00								
211 Eng.11K2A/ D (44kW)	98-00		R	L	**CF252**	Luc	Ø 19,05	Alu
	98-00		R	R	**CF253**	Luc	Ø 19,05	Alu
214 Eng.14K2F (55kW)	95-00		R	L	**CF252**	Luc	Ø 19,05	Alu
	95-00		R	R	**CF253**	Luc	Ø 19,05	Alu
214 Si Eng.14K4F (76kW)	95-00		R	L	**CF252**	Luc	Ø 19,05	Alu
	95-00		R	R	**CF253**	Luc	Ø 19,05	Alu
216 Si Eng.16K4F (82kW)	95-00		R	L	**CF252**	Luc	Ø 19,05	Alu
	95-00		R	R	**CF253**	Luc	Ø 19,05	Alu
218 Eng.18K4K(VVC) (88-107kW)	95-00		R	L	**CF252**	Luc	Ø 19,05	Alu
	95-00		R	R	**CF253**	Luc	Ø 19,05	Alu
220 D/SD Eng.20T2R (63kW)	95-00		R	L	**CF252**	Luc	Ø 19,05	Alu
	95-00		R	R	**CF253**	Luc	Ø 19,05	Alu
220 SDi Eng.20T2N (74-77kW)	95-00		R	L	**CF252**	Luc	Ø 19,05	Alu
	95-00		R	R	**CF253**	Luc	Ø 19,05	Alu
2000 Mk I 1/51-12/75								
2.0, SW Eng.20TC (66kW)	68-75		R		**CF428**		Ø 17,46	
2000 Mk II 3/72-12/77								
2.0, SW Eng.20TC (65-66-68kW)	72-75		R		**CF428**		Ø 17,46	
2.0, SW Eng.HB1/ KE1 (68kW)	75-77		R		**CF428**		Ø 17,46	
2000-3500 (SD1) 6/76-10/86								
2.0 Eng.20V (74-75kW)	4/82-86		R		**CF397**	Loc	Ø 22,22	
2.3 Eng.10C/ 11C (88-92kW)	77-86		R		**CF397**	Loc	Ø 22,22	
2.4 TD Eng.VM HR492 (67kW)	9/82-86		R		**CF397**	Loc	Ø 22,22	
2.6, S Eng.12C/ 13C (93-99kW)	77-86		R		**CF397**	Loc	Ø 22,22	
3.5 Eng.38A/ 39A (115-116kW)	76-86		R		**CF397**	Loc	Ø 22,22	
3.5 Vitesse Eng.30A/ 31A (142kW)	82-86		R		**CF397**	Loc	Ø 22,22	
25 (RF) 10/99-12/05								
1.1 (44kW)	01-04		R	L	**CF252**	Luc	Ø 19,05	Alu
	01-04		R	R	**CF253**	Luc	Ø 19,05	Alu

		Spare Parts	F/R	L/R	FRITECH ref.		DIMENSIONS mm.	NOTE
1.1 16v Eng.11K4F (55kW)	04-		R	L	**CF252**	Luc	Ø 19,05	Alu
	04-		R	R	**CF253**	Luc	Ø 19,05	Alu
1.4 Eng.14K4M (62kW)	10/99-		R	L	**CF252**	Luc	Ø 19,05	Alu
	10/99-		R	R	**CF253**	Luc	Ø 19,05	Alu
1.4 16v Eng.14K4F (76kW)	10/99-		R	L	**CF252**	Luc	Ø 19,05	Alu
	10/99-		R	R	**CF253**	Luc	Ø 19,05	Alu
1.6 16v Eng.16K4F/ 16 (80kW)	10/99-		R	L	**CF252**	Luc	Ø 19,05	Alu
	10/99-		R	R	**CF253**	Luc	Ø 19,05	Alu
1.8 16v Eng.18K4F/ 16 (85kW)	10/99-		R	L	**CF252**	Luc	Ø 19,05	Alu
	10/99-		R	R	**CF253**	Luc	Ø 19,05	Alu
1.8 16v Eng.18K4K(VVC) (107kW)	2/00-		R	L	**CF252**	Luc	Ø 19,05	Alu
	2/00-		R	R	**CF253**	Luc	Ø 19,05	Alu
2.0 i DT Eng.20T2N (74-77-83kW)	10/99-		R	L	**CF252**	Luc	Ø 19,05	Alu
	10/99-		R	R	**CF253**	Luc	Ø 19,05	Alu
250 Ju 1/96-								
1.5	96-		R		**CF202**		Ø 20,32	
1.6 D	96-		R		**CF202**		Ø 20,32	
2500 5/74-12/77								
2.5, SW Eng.CR1/ MD9 (70-74-90-110-123kW)	74-77		R		**CF428**		Ø 17,46	
400 I (XW) 4/90-4/95								
414 GSI/SI Kat Eng.14K4F (76kW)	93-95		R	L	**CF235**	Luc	Ø 19,05	Alu
	93-95		R	R	**CF234**	Luc	Ø 19,05	Alu
	93-95				**PF224**	Luc	Ø 22,20	RHD
414 Si, Gsi Eng.14K4C/ D (66kW)	90-95		R	L	**CF235**	Luc	Ø 19,05	Alu
	90-95		R	R	**CF234**	Luc	Ø 19,05	Alu
	90-95				**PF224**	Luc	Ø 22,20	RHD
414 Si, Gsi, Cabrio Eng.14K4C/ D (69-70kW)	93-95		R	L	**CF235**	Luc	Ø 19,05	Alu
	93-95		R	R	**CF234**	Luc	Ø 19,05	Alu
	93-95				**PF224**	Luc	Ø 22,20	RHD
416 GSI, SW Eng.D16Z2 (82kW)	90-95		R	L	**CF235**	Luc	Ø 19,05	Alu
	90-95		R	R	**CF234**	Luc	Ø 19,05	Alu
	90-95				**PF224**	Luc	Ø 22,20	RHD
416 GSI/GSE Eng.16K16 (85kW)	90-95				**PF224**	Luc	Ø 22,20	RHD
416 GTI, SW Eng.D16A8 (90kW)	90-95		R	L	**CF235**	Luc	Ø 19,05	Alu
	90-95		R	R	**CF234**	Luc	Ø 19,05	Alu
	90-95				**PF224**	Luc	Ø 22,20	RHD
416 GTI/GTE Eng.D16A9 (96kW)	90-95				**PF224**	Luc	Ø 22,20	RHD
418 D Eng.XUD9AL (49kW)	91-95		R	L	**CF235**	Luc	Ø 19,05	Alu, RHD
	91-95		R	R	**CF234**	Luc	Ø 19,05	Alu, RHD
	91-95				**PF224**	Luc	Ø 22,20	RHD
418 TD, SW Eng.XUD7TE (65kW)	91-95		R	L	**CF235**	Luc	Ø 19,05	Alu, RHD
	91-95		R	R	**CF234**	Luc	Ø 19,05	Alu, RHD
	91-95				**PF262**	Aisin	Ø 23,81	Alu, +ABS
	91-95				**PF224**	Luc	Ø 22,20	RHD
420 GSI/SLI/GTI/Vitesse, SW Eng.20T4H	93-95		R	L	**CF235**	Luc	Ø 19,05	Alu
(100-132kW)	93-95		R	R	**CF234**	Luc	Ø 19,05	Alu
	93-95				**PF224**	Luc	Ø 22,20	RHD
420 GTI/GSI/Vitesse Eng.20M4F (103kW)	92-95		R	L	**CF235**	Luc	Ø 19,05	Alu
	92-95		R	R	**CF234**	Luc	Ø 19,05	Alu
	92-95				**PF262**	Aisin	Ø 23,81	Alu, +ABS
	92-95				**PF224**	Luc	Ø 22,20	RHD
420 T GSi (152kW)	90-95		R	L	**CF235**	Luc	Ø 19,05	Alu
	90-95		R	R	**CF234**	Luc	Ø 19,05	Alu
420 T. Eng.20T4G (147kW)	93-95		R	L	**CF235**	Luc	Ø 19,05	Alu
	93-95		R	R	**CF234**	Luc	Ø 19,05	Alu
	93-95				**PF224**	Luc	Ø 22,20	RHD
400 II (RT) 5/95-3/00								
414 Si Eng.14K4F (76kW)	95-00		R	L	**CF252**	Luc	Ø 19,05	Ch AD 074465-, Alu
	95-00		R	L	**CF235**	Luc	Ø 19,05	Ch -AD074464, Alu
	00-		R	R	**CF253**	Luc	Ø 19,05	Ch AD 074465-, Alu
	95-00		R	R	**CF234**	Luc	Ø 19,05	Ch -AD074464, Alu
	95-00				**PF262**	Aisin	Ø 23,81	Alu, +ABS
	-99				**PF529**	Luc	Ø 23,81	Ch 074465-, +ABS

ROVER

		Spare Parts	F/R	L/R	FRITECH ref.		DIMENSIONS mm.	NOTE
416 Si Eng.16K4F (82kW)	95-00		R	L	**CF252**	Luc	Ø 19,05	Ch AD 074465-, Alu
	95-00		R	L	**CF235**	Luc	Ø 19,05	Ch -AD074464, Alu
	00-		R	R	**CF253**	Luc	Ø 19,05	Ch AD 074465-, Alu
	95-00		R	R	**CF234**	Luc	Ø 19,05	Ch -AD074464, Alu
	95-00				**PF262**	Aisin	Ø 23,81	Alu, +ABS
	-99				**PF529**	Luc	Ø 23,81	Ch 074465-, +ABS
416 Si Eng.D16Y2 (83kW)	95-00		R	L	**CF252**	Luc	Ø 19,05	Ch AD 074465-, Alu
	95-00		R	L	**CF235**	Luc	Ø 19,05	Ch -AD074464, Alu
	00-		R	R	**CF253**	Luc	Ø 19,05	Ch AD 074465-, Alu
	95-00		R	R	**CF234**	Luc	Ø 19,05	Ch -AD074464, Alu
	95-00				**PF262**	Aisin	Ø 23,81	Alu, +ABS
	-99				**PF529**	Luc	Ø 23,81	Ch 074465-, +ABS
420 D Eng.20T2R (63kW)	95-00		R	L	**CF252**	Luc	Ø 19,05	Alu
	95-00		R	R	**CF253**	Luc	Ø 19,05	Alu
	-99				**PF529**	Luc	Ø 23,81	Ch 074465-, +ABS
420 Di Eng.20T2N (74-77kW)	95-00		R	L	**CF252**	Luc	Ø 19,05	Alu
	95-00		R	R	**CF253**	Luc	Ø 19,05	Alu
	-99				**PF529**	Luc	Ø 23,81	Ch 074465-, +ABS
420 Si Lux Eng.20T4H/ T16 (100kW)	95-00		R	L	**CF252**	Luc	Ø 19,05	Alu
	95-00		R	R	**CF253**	Luc	Ø 19,05	Alu
	95-00				**PF262**	Aisin	Ø 23,81	Alu, +ABS
	-99				**PF529**	Luc	Ø 23,81	Ch 074465-, +ABS
45 (RT) 2/00-12/05								
1.4 16v Eng.14K4F (76kW)	00-		R	L	**CF252**	Luc	Ø 19,05	Ch AD 074465-, Alu
	00-		R	L	**CF235**	Luc	Ø 19,05	Ch -AD074464, Alu
	00-		R	R	**CF253**	Luc	Ø 19,05	Ch AD 074465-, Alu
	00-		R	R	**CF234**	Luc	Ø 19,05	Ch -AD074464, Alu
	2/00-				**PF529**	Luc	Ø 23,81	
1.6 16v Eng.16K4F/ 16 (80kW)	00-		R	L	**CF252**	Luc	Ø 19,05	Ch AD 074465-, Alu
	00-		R	L	**CF235**	Luc	Ø 19,05	Ch -AD074464, Alu
	00-		R	R	**CF253**	Luc	Ø 19,05	Ch AD 074465-, Alu
	00-		R	R	**CF234**	Luc	Ø 19,05	Ch -AD074464, Alu
	2/00-				**PF529**	Luc	Ø 23,81	
1.8 16v Eng.18K4F/ 16 (85-86kW)	00-		R	L	**CF252**	Luc	Ø 19,05	Ch AD 074465-, Alu
	00-		R	L	**CF235**	Luc	Ø 19,05	Ch -AD074464, Alu
	00-		R	R	**CF253**	Luc	Ø 19,05	Ch AD 074465-, Alu
	00-		R	R	**CF234**	Luc	Ø 19,05	Ch -AD074464, Alu
	2/00-				**PF529**	Luc	Ø 23,81	
2.0 i DT Eng.20T2N (74-77-83kW)	00-		R	L	**CF252**	Luc	Ø 19,05	Ch AD 074465-, Alu
	00-		R	L	**CF235**	Luc	Ø 19,05	Ch -AD074464, Alu
	00-		R	R	**CF253**	Luc	Ø 19,05	Ch AD 074465-, Alu
	00-		R	R	**CF234**	Luc	Ø 19,05	Ch -AD074464, Alu
	2/00-				**PF529**	Luc	Ø 23,81	
2.0 V6 Eng.20K4F (110kW)	00-		R	L	**CF252**	Luc	Ø 19,05	Ch AD 074465-, Alu
	00-		R	L	**CF235**	Luc	Ø 19,05	Ch -AD074464, Alu
	00-		R	R	**CF253**	Luc	Ø 19,05	Ch AD 074465-, Alu
	00-		R	R	**CF234**	Luc	Ø 19,05	Ch -AD074464, Alu
	2/00-				**PF529**	Luc	Ø 23,81	
600 (RH) 8/93-2/99								
618 Eng.F18A3 (85kW)					**PF529**	Luc	Ø 23,81	Ch 246797-, -ABS, RHD
620 Eng.F20Z1 (96kW)					**PF529**	Luc	Ø 23,81	Ch 246797-, -ABS, RHD
620 Eng.F20Z1/ Z2 (85-96kW)					**PF529**	Luc	Ø 23,81	Ch 246797-, -ABS, RHD
620 SDi Eng.20T2N (74kW)	-99				**PF529**	Luc	Ø 23,81	Ch 246797-, -ABS, RHD
623 Eng.H23A3 (116kW)					**PF529**	Luc	Ø 23,81	Ch 246797-, -ABS, RHD
A40 1/61-12/67								
1.1 Eng.10H (33-36-40-41kW)	61-67		R		**CF191**	Loc	Ø 19,05	
Acclaim 1/82-12/85								
1.3 Eng.EJ (51-52kW)	82-		R	L	**CF408**		Ø 17,46	Ch -121262, Alu
	-85		R	L	**CF206**		Ø 19,05	Ch 121263-, Alu
	82-		R	R	**CF409**		Ø 17,46	Ch -121262, Alu
	-85		R	R	**CF207**		Ø 19,05	Ch 121263-, Alu
Allegro (ADO 67) 5/73-10/83								
1.0 Eng.A1.0 (31-33-41kW)	80-83		R		**CF374**	Luc	Ø 14,28	Alu

		Spare Parts	F/R	L/R	FRITECH ref.		DIMENSIONS mm.	NOTE
1.1 Eng.10H (33-36-40-41kW)	75-79		R		**CF374**	Luc	Ø 14,28	Alu
1.3, SW Eng.12H (40-43kW)	73-82		R		**CF374**	Luc	Ø 14,28	Alu
1.5, SW Eng.14H (50-56kW)	73-82		R		**CF374**	Luc	Ø 14,28	Alu
1.7 SW (50kW)	79-		R		**CF374**	Luc	Ø 14,28	Alu
1.75 Eng.17H (53-58-66-67kW)	75-79		R		**CF374**	Luc	Ø 14,28	Alu
Ambassador 3/82-10/84								
1.7 Eng.P (62-64kW)	82-84		R		**CF443**		Ø 17,46	
2.0 Eng.20H/ R (69-75kW)	82-84		R		**CF443**		Ø 17,46	
Austin 12/68-12/72								
3.0	68-72		R		**CF373**		Ø 19,05	Alu
America	68-71		R		**CF348**		Ø 20,32	Exc. 3.0
Austin Taxi 1/70-								
FL2/ FX4, R	5/82-		F	L	**CF445**		Ø 22,20	
	70-4/82		F	L	**CF717**		Ø 25,40	
	5/82-		F	R	**CF446**		Ø 22,20	
	70-4/82		F	R	**CF718**		Ø 25,40	
	5/82-		R		**CF282**		Ø 22,20	Alu
	70-4/82		R		**CF418**		Ø 25,40	Alu
Coupe 3/96-11/99								
1.6 16v Eng.16K4F (82kW)	96-99		R	L	**CF252**	Luc	Ø 19,05	Alu
	96-99		R	R	**CF253**	Luc	Ø 19,05	Alu
1.8 16v Eng.18K4K(VVC) (107kW)	96-99		R	L	**CF252**	Luc	Ø 19,05	Alu
	96-99		R	R	**CF253**	Luc	Ø 19,05	Alu
Dolomite 1/72-12/81								
1.3 Eng.FM2/ 3/ FM8 (43-46-56kW)	77-81		R		**CF377**		Ø 15,87	Alu
1.5 Eng.GFM11 (53kW)	78-81		R		**CF416**		Ø 15,87	Alu
	77-78		R		**CF417**		Ø 17,78	Alu
1.85 Eng.PE104S (68kW)	76-81		R		**CF416**		Ø 15,87	Alu
	72-76		R		**CF417**		Ø 17,78	Alu
2.0 Sprint (93-95kW)	73-81		R		**CF416**		Ø 15,87	Alu
EA Range 1/68-1/82								
345	68-82		F	R	**CF420**		Ø 22,20	
350	68-82		F	R	**CF420**		Ø 22,20	
GT6 Mk I 1/66-12/68								
2.0 Eng.KE1L (70kW)			R		**CF377**		Ø 15,87	Ch KC7279-, Alu
	66-		R		**CF335**		Ø 19,05	Ch -KC7278, Alu
GT6 Mk II 12/68-12/70								
2.0 Eng.HB1/ KE1 (69-77kW)	68-70		R		**CF261**		Ø 17,78	Alu
Herald 1/61-12/71								
0.95	67-71		F	L	**CF192**		Ø 19,05	
	67-71		R		**CF377**		Ø 15,87	Alu
1.1, SW, Cabrio Eng.AJM (29-35kW)	61-69		R		**CF335**		Ø 19,05	Alu
1.26, SW, Cabrio (46kW)	-71		F	L	**CF192**		Ø 19,05	Ch GA15031-
	67-		R		**CF377**		Ø 15,87	Alu
	-71		R		**CF335**		Ø 19,05	Ch GA15031-, Alu
1.3 Eng.FM2/ 3 (46-56kW)	67-71		R		**CF335**		Ø 19,05	Alu
Ital Van 1/82-3/84								
440L	82-84		R		**CF377**		Ø 15,87	Alu
575L	82-84		R		**CF728**		Ø 15,87	Alu
Ital, SW 7/80-3/84								
1.3 Eng.A1.3 (44-56kW)	80-84		R		**CF261**		Ø 17,78	Alu
1.7 Eng.P (58-64kW)	80-84		R		**CF377**		Ø 15,87	Alu, Saloon
	80-84		R		**CF261**		Ø 17,78	Alu, Estate
2.0 (67kW)	80-84		R		**CF377**		Ø 15,87	Alu, Saloon
	80-84		R		**CF261**		Ø 17,78	Alu, Estate
Maestro I (XC) 3/83-1/91								
1.3 Eng.12H/ 12HC32/ 12H999AA (45-46kW)	83-85		R		**CF085**	Luc	Ø 20,64	
	83-85				**PF111**	Luc	Ø 20,64	
1.3 LS Eng.12H (49kW)	83-90		R	L	**CF395**	Luc	Ø 15,87	Exc. Van
	83-90		R	R	**CF396**	Luc	Ø 15,87	Exc. Van
	83-90				**PF111**	Luc	Ø 20,64	Exc. Van
1.6 Eng.16H956AK (59kW)	83-84		R		**CF085**	Luc	Ø 20,64	
	83-84				**PF111**	Luc	Ø 20,64	

ROVER

		Spare Parts	F/R	L/R	FRITECH ref.		DIMENSIONS mm.	NOTE
1.6 Mayfair HLS Eng.16HC37 (61kW)	83-90		R		**CF085**	Luc	Ø 20,64	
	83-90				**PF111**	Luc	Ø 20,64	
1.6 MG Eng.16HA03AL (72kW)	83-85		R	L	**CF395**	Luc	Ø 15,87	Exc. Van
	83-85		R	R	**CF396**	Luc	Ø 15,87	Exc. Van
	83-85				**PF111**	Luc	Ø 20,64	Exc. Van
1.6 MG Eng.16HA35AL (73kW)	83-90		R	L	**CF395**	Luc	Ø 15,87	Exc. Van
	83-90		R	R	**CF396**	Luc	Ø 15,87	Exc. Van
	83-90				**PF111**	Luc	Ø 20,64	Exc. Van
2.0 D Eng.MDi (44kW)	84-90		R		**CF085**	Luc	Ø 20,64	
	84-90				**PF111**	Luc	Ø 20,64	
2.0 EFi Eng.20HA50AA/ 20HC51AA/ 20HC81 (83kW)	84-90		R	L	**CF395**	Luc	Ø 15,87	
	84-90		R	R	**CF396**	Luc	Ø 15,87	
	84-90				**PF111**	Luc	Ø 20,64	
2.0 T. Eng.20H (112kW)	88-90		R	L	**CF395**	Luc	Ø 15,87	
	88-90		R	R	**CF396**	Luc	Ø 15,87	
	88-90				**PF111**	Luc	Ø 20,64	
Maestro II 9/90-1/95								
1.3 Eng.12HE (49-51kW)	90-95		R	L	**CF395**	Luc	Ø 15,87	Exc. Van
	90-95		R	R	**CF396**	Luc	Ø 15,87	Exc. Van
	90-95				**PF111**	Luc	Ø 20,64	Exc. Van
1.6 Eng.16HE (63kW)	90-95		R	L	**CF395**	Luc	Ø 15,87	Exc. Van
	90-95		R	R	**CF396**	Luc	Ø 15,87	Exc. Van
	90-95				**PF111**	Luc	Ø 20,64	Exc. Van
2.0 D Eng.MDi (44kW)	90-92		R	L	**CF395**	Luc	Ø 15,87	Exc. Van
	90-92		R	R	**CF396**	Luc	Ø 15,87	Exc. Van
	90-92				**PF111**	Luc	Ø 20,64	Exc. Van
2.0 TD Eng.MDi (60kW)	90-95		R	L	**CF395**	Luc	Ø 15,87	Exc. Van
	90-95		R	R	**CF396**	Luc	Ø 15,87	Exc. Van
	90-95				**PF111**	Luc	Ø 20,64	Exc. Van
Marina I 4/71-9/75								
1.3, Coupe (42-44kW)	71-		F	L	**CF192**		Ø 19,05	Ch -172478, Front Drum Brake
	-75		F	L	**CF602**		Ø 22,20	Ch 302538-, Front Drum Brake, Exc. 10 CWT Van
	-75		F	R	**CF385**		Ø 22,20	Ch 302538-, Front Drum Brake, Exc. 10 CWT Van
			R		**CF377**		Ø 15,87	Ch -172478, Alu, Front Disc Brake, Incl. Belgium
	71-72		R		**CF416**		Ø 15,87	Alu, Front Disc Brake, Incl. Sweden
	71-		R		**CF261**		Ø 17,78	Ch -172478, Alu, Front Drum Brake
	-75		R		**CF335**		Ø 19,05	Ch 172479-, Alu, Front Drum Brake, Incl. 10 CWT Van
1.8, SW, Coupe Eng.18V (53-57-59-68-70kW)	72-		R		**CF377**		Ø 15,87	Ch -172478, Alu
	71-72		R		**CF416**		Ø 15,87	Alu
	-75		R		**CF261**		Ø 17,78	Ch 172478-, Alu
Marina II 3/75-10/78								
1.1 (34kW)	75-		F	L	**CF192**		Ø 19,05	Ch -172478, Front Drum Brake
	-78		F	L	**CF602**		Ø 22,20	Ch 302538-, Front Drum Brake, Exc. 10 CWT Van
	-78		F	R	**CF385**		Ø 22,20	Ch 302538-, Front Drum Brake, Exc. 10 CWT Van
			R		**CF377**		Ø 15,87	Ch -172478, Alu, Front Disc Brake, Incl. Belgium
	75-78		R		**CF416**		Ø 15,87	Alu, Front Disc Brake, Incl. Sweden
	75-		R		**CF261**		Ø 17,78	Ch -172478, Alu, Front Drum Brake
	75-78		R		**CF261**		Ø 17,78	Alu, Front Disc Brake
	-78		R		**CF335**		Ø 19,05	Ch 172479-, Alu, Front Drum Brake, Incl. 10 CWT Van
1.75 Eng.17H (53-58-66-67kW)	75-78		R		**CF377**		Ø 15,87	Alu, Saloon, Coupé
	75-78		R		**CF261**		Ø 17,78	Alu, Estate
Marina III 9/78-10/80								
1.1 (34kW)	78-		F	L	**CF192**		Ø 19,05	Ch -172478, Front Drum Brake
	-80		F	L	**CF602**		Ø 22,20	Ch 302538-, Front Drum Brake, Exc. 10 CWT Van
	-80		F	R	**CF385**		Ø 22,20	Ch 302538-, Front Drum Brake, Exc. 10 CWT Van
			R		**CF377**		Ø 15,87	Ch -172478, Alu, Front Disc Brake, Incl. Belgium
	78-80		R		**CF416**		Ø 15,87	Alu, Front Disc Brake, Incl. Sweden
	78-		R		**CF261**		Ø 17,78	Ch -172478, Alu, Front Drum Brake

		Spare Parts	F/R	L/R	FRITECH ref.		DIMENSIONS mm.	NOTE
1.1 (34kW)	-80		R		**CF335**		Ø 19,05	Ch 172479-, Alu, Front Drum Brake, Incl. 10 CWT Van
1.3, SW Eng.12V (42-43kW)	78-		F	L	**CF192**		Ø 19,05	Ch -172478, Front Drum Brake
	-80		F	L	**CF602**		Ø 22,20	Ch 302538-, Front Drum Brake, Exc. 10 CWT Van
	-80		F	R	**CF385**		Ø 22,20	Ch 302538-, Front Drum Brake, Exc. 10 CWT Van
			R		**CF377**		Ø 15,87	Ch -172478, Alu, Front Disc Brake, Incl. Belgium
	78-80		R		**CF416**		Ø 15,87	Alu, Front Disc Brake, Incl. Sweden
	78-		R		**CF261**		Ø 17,78	Ch -172478, Alu, Front Drum Brake
	78-80		R		**CF261**		Ø 17,78	Alu, Front Disc Brake
	-80		R		**CF335**		Ø 19,05	Ch 172479-, Alu, Front Drum Brake, Incl. 10 CWT Van
1.7, SW Eng.P (58-64kW)	78-80		R		**CF377**		Ø 15,87	Alu, Saloon, Coupé
	78-80		R		**CF261**		Ø 17,78	Alu, Estate
Pick-up 575	78-80		R		**CF728**		Ø 15,87	Alu, Front Disc Brake
Maxi I 4/69-10/80								
1.5 Eng.14H (50-56kW)	78-80		R		**CF442**		Ø 14,29	Alu
	69-78		R		**CF261**		Ø 17,78	Alu
1.75 Eng.17H (53-58-66-67kW)	11/78-80		R		**CF442**		Ø 14,29	Alu
	11/78-80		R		**CF442**		Ø 14,29	Alu
	69-10/78		R		**CF261**		Ø 17,78	Alu
	72-10/78		R		**CF261**		Ø 17,78	Alu
Maxi II 10/80-12/82								
1.75 Eng.17H (53-58-66-67kW)	80-82		R		**CF442**		Ø 14,29	Alu
Metro MG 10/80-9/90								
1.0 Eng.99H (31-33-41kW)	80-90		R		**CF091**	Loc	Ø 17,46	
	84-90				**PF225**	Loc	Ø 20,64	
	80-83				**PF475**	Luc	Ø 17,78	
1.0 Eng.99HA65P (35kW)	80-90		R		**CF091**	Loc	Ø 17,46	
	84-90				**PF225**	Loc	Ø 20,64	
	80-83				**PF475**	Luc	Ø 17,78	
1.0 Eng.A1.0 (30-31-41kW)	80-90		R		**CF091**	Loc	Ø 17,46	
	84-90				**PF225**	Loc	Ø 20,64	
	80-83				**PF475**	Luc	Ø 17,78	
1.3 Eng.12H996AA (52kW)	80-85		R		**CF091**	Loc	Ø 17,46	
	80-85				**PF225**	Loc	Ø 20,64	
1.3 Eng.12HC21AA (44kW)	85-90		R		**CF091**	Loc	Ø 17,46	
	85-90				**PF225**	Loc	Ø 20,64	
1.3 T. Eng.12HA85AA (66-69kW)	82-90		R		**CF091**	Loc	Ø 17,46	
	82-90				**PF225**	Loc	Ø 20,64	
Metro Van 10/80-9/90								
1.0 Eng.99H (33kW)	80-90		R		**CF091**	Loc	Ø 17,46	
	84-90				**PF225**	Loc	Ø 20,64	
	80-83				**PF475**	Luc	Ø 17,78	
1.0 Eng.99HA65P (35kW)	80-90		R		**CF091**	Loc	Ø 17,46	
	84-90				**PF225**	Loc	Ø 20,64	
	80-83				**PF475**	Luc	Ø 17,78	
1.0 (30kW)	80-90		R		**CF091**	Loc	Ø 17,46	
	84-90				**PF225**	Loc	Ø 20,64	
	80-83				**PF475**	Luc	Ø 17,78	
1.3 Eng.12H996AA (52kW)	82-90		R		**CF091**	Loc	Ø 17,46	
	82-90				**PF225**	Loc	Ø 20,64	
1.3 Eng.12HC21AA (44kW)	85-90		R		**CF091**	Loc	Ø 17,46	
	85-90				**PF225**	Loc	Ø 20,64	
1.3 T. Eng.12HA85AA (66-69kW)	81-90		R		**CF091**	Loc	Ø 17,46	
	81-90				**PF225**	Loc	Ø 20,64	
MG 1/72-12/81								
1.3	72-81		R		**CF348**	Loc	Ø 20,32	
MG ZS 7/01-12/05								
120 1.8 Eng.18K4F (86kW)	01-05		R	L	**CF252**	Luc	Ø 19,05	Ch AD 074465-, Alu
	01-05		R	L	**CF235**	Luc	Ø 19,05	Ch -AD074464, Alu
	01-05		R	R	**CF253**	Luc	Ø 19,05	Ch AD 074465-, Alu
	01-05		R	R	**CF234**	Luc	Ø 19,05	Ch -AD074464, Alu
	01-05				**PF529**	Luc	Ø 23,81	

ROVER

		Spare Parts	F/R	L/R	FRITECH ref.		DIMENSIONS mm.	NOTE
2.0 TD Eng.20T2N (74-83kW)	04-05		R	L	**CF235**	Luc	Ø 19,05	Ch -74464, Alu
	04-05		R	L	**CF252**	Luc	Ø 19,05	Ch 74465-, Alu
	04-05		R	R	**CF234**	Luc	Ø 19,05	Ch -74464, Alu
	04-05		R	R	**CF253**	Luc	Ø 19,05	Ch 74465-, Alu
	04-05				**PF529**	Luc	Ø 23,81	+ABS
MGB GT 1/66-11/80								
1.8, Cabrio Eng.18V/ G/ GA/ GB/ GD/ GF/ GG (57-68-70kW)	66-80		R		**CF348**		Ø 20,32	Roadster, Tourer, GT V8
MGR V8 9/92-12/95								
3.9 Eng.V8 (140kW)	92-95		R		**CF202**		Ø 20,32	
Midget 1/64-12/79								
1.1 Eng.10H (33-36-40-41kW)	64-66		R		**CF191**	Loc	Ø 19,05	
1.3 Eng.A1275 (39-45-48-51kW)	67-74		R		**CF191**	Loc	Ø 19,05	
1.5 Eng.GFM11 (49-53kW)	74-79		R		**CF380**		Ø 17,46	
Mini Mk I 1/67-								
0.8 Eng.BMCSerieA (25-30kW)			F	L	**CF334**	Loc	Ø 20,32	Ch 359771-1055566
	-74		F	L	**CF190**		Ø 23,81	Ch 1055567-
			F	R	**CF336**	Loc	Ø 20,32	Ch 359771-1055566
	-74		F	R	**CF189**		Ø 23,81	Ch 1055567-
			R		**CF262**	Loc	Ø 15,87	Ch 359771-1055566
	-74		R		**CF191**	Loc	Ø 19,05	Ch 1055567-
1.0, Mayfair Sport Eng.99HD81 (30kW)			F	L	**CF334**	Loc	Ø 20,32	Ch -1055566
			F	L	**CF190**		Ø 23,81	Ch 1055567-
			F	R	**CF336**	Loc	Ø 20,32	Ch -1055566
			F	R	**CF189**		Ø 23,81	Ch 1055567-
			R		**CF262**	Loc	Ø 15,87	Ch -1055566
			R		**CF191**	Loc	Ø 19,05	Ch 1055567-
1.1 Special Eng.10H (33-36-40-41kW)			F	L	**CF334**	Loc	Ø 20,32	Ch -1055566
			F	L	**CF190**		Ø 23,81	Ch 1055567-
			F	R	**CF336**	Loc	Ø 20,32	Ch -1055566
			F	R	**CF189**		Ø 23,81	Ch 1055567-
			R		**CF262**	Loc	Ø 15,87	Ch -1055566
			R		**CF191**	Loc	Ø 19,05	Ch 1055567-
1.25 GT (39kW)	69-		R		**CF262**	Loc	Ø 15,87	Ch -S20D19415A
	-80		R		**CF191**	Loc	Ø 19,05	Ch S20D19416A-
	-80				**PF112**	Loc	Ø 19,05/17,78	Ch S20D19416A-, (<->)
1.3 Eng.12A2A (44kW)			F	L	**CF334**	Loc	Ø 20,32	Ch -1055566
			F	L	**CF190**		Ø 23,81	Ch 1055567-
			F	R	**CF336**	Loc	Ø 20,32	Ch -1055566
			F	R	**CF189**		Ø 23,81	Ch 1055567-
			R		**CF262**	Loc	Ø 15,87	Ch -1055566
			R		**CF191**	Loc	Ø 19,05	Ch 1055567-
	67-91		R		**CF380**		Ø 17,46	
1.3 Eng.12A2A (45kW)			F	L	**CF334**	Loc	Ø 20,32	Ch -1055566
			F	L	**CF190**		Ø 23,81	Ch 1055567-
			F	R	**CF336**	Loc	Ø 20,32	Ch -1055566
			F	R	**CF189**		Ø 23,81	Ch 1055567-
			R		**CF262**	Loc	Ø 15,87	Ch -1055566
			R		**CF191**	Loc	Ø 19,05	Ch 1055567-
1.3 Eng.12A2B (37kW)			F	L	**CF334**	Loc	Ø 20,32	Ch -1055566
			F	L	**CF190**		Ø 23,81	Ch 1055567-
			F	R	**CF336**	Loc	Ø 20,32	Ch -1055566
			F	R	**CF189**		Ø 23,81	Ch 1055567-
			R		**CF262**	Loc	Ø 15,87	Ch -1055566
			R		**CF191**	Loc	Ø 19,05	Ch 1055567-
1.3 T. Eng.A1.3 (53-56-58-68kW)			F	L	**CF334**	Loc	Ø 20,32	Ch -1055566
			F	L	**CF190**		Ø 23,81	Ch 1055567-
			F	R	**CF336**	Loc	Ø 20,32	Ch -1055566
			F	R	**CF189**		Ø 23,81	Ch 1055567-
			R		**CF262**	Loc	Ø 15,87	Ch -1055566
			R		**CF191**	Loc	Ø 19,05	Ch 1055567-
Mini Mk I Cooper 1/67-12/91								
0.8 Cooper S Eng.BMCSerieA (25kW)	67-79		R		**CF262**	Loc	Ø 15,87	

		Spare Parts	F/R	L/R	FRITECH ref.		DIMENSIONS mm.	NOTE
1.0 Cooper Eng.99H (29kW)			R		**CF262**	Loc	Ø 15,87	Ch 382832-
	67-69		R		**CF191**	Loc	Ø 19,05	
1.3 Cooper S Eng.12A2A (44kW)	69-91		R		**CF262**	Loc	Ø 15,87	
	67-69		R		**CF191**	Loc	Ø 19,05	
Mini Mk I Van, Pick-Up 1/67-6/93								
0.8 Eng.BMCSerieA (25kW)	69-79		F	L	**CF190**	Loc	Ø 23,81	
	69-79		F	R	**CF189**	Loc	Ø 23,81	
	69-79		R		**CF191**	Loc	Ø 19,05	
	10/78-79				**PF112**	Loc	Ø 19,05/17,78	(<->)
1.0 (26-28kW)	69-84		F	L	**CF190**	Loc	Ø 23,81	
	69-84		F	R	**CF189**	Loc	Ø 23,81	
	69-84		R		**CF191**	Loc	Ø 19,05	
	67-84				**PF112**	Loc	Ø 19,05/17,78	(<->)
1.0 Mayfair Eng.99H997P/ 99HA53P/ 99HC20P	82-84		F	L	**CF190**	Loc	Ø 23,81	
(31kW)	82-84		F	R	**CF189**	Loc	Ø 23,81	
	69-92		R		**CF191**	Loc	Ø 19,05	
	82-88				**PF112**	Loc	Ø 19,05/17,78	(<->)
1.0, Mayfair Sport Eng.99HD81 (30kW)	88-93		R		**CF191**	Loc	Ø 19,05	
1.1 Special Eng.10H (33-36-40-41kW)	76-81		R		**CF348**		Ø 20,32	
Montego (XE), SW 4/84-10/95								
1.3, SW Eng.12H (39-45-50-51kW)	84-88		R	L	**CF404**	Luc	Ø 17,78	Exc. SW
	84-88		R	L	**CF440**	Luc	Ø 19,05	SW
	84-88		R	R	**CF441**	Luc	Ø 19,05	SW
	84-88				**PF111**	Luc	Ø 20,64	
1.6 LS,HL Eng.16HC37 (61kW)	84-88		R	L	**CF404**	Luc	Ø 17,78	Exc. SW
	84-88		R	L	**CF440**	Luc	Ø 19,05	SW
	84-88		R	R	**CF441**	Luc	Ø 19,05	SW
	84-88				**PF111**	Luc	Ø 20,64	
2.0 Eng.20H/ HSC (74kW)	84-91		R	L	**CF404**	Luc	Ø 17,78	Exc. SW
	84-91		R	L	**CF440**	Luc	Ø 19,05	SW
	84-91		R	R	**CF441**	Luc	Ø 19,05	SW
	84-91				**PF111**	Luc	Ø 20,64	
2.0 TD Eng.BB (60kW)	88-95		R	L	**CF404**	Luc	Ø 17,78	Exc. SW
	88-95		R	L	**CF440**	Luc	Ø 19,05	SW
	88-95		R	R	**CF441**	Luc	Ø 19,05	SW
	88-95				**PF111**	Luc	Ø 20,64	
2.0, GTI, LXI, HLi Eng.20H/ HSC (74-83kW)	84-91		R	L	**CF440**	Luc	Ø 19,05	
	84-91		R	R	**CF441**	Luc	Ø 19,05	
	84-88				**PF111**	Luc	Ø 20,64	
Princess I 4/76-9/78								
1.8 Eng.18H/ V (57-60-70kW)	76-78		R		**CF607**	Loc	Ø 14,28	
2.2 Eng.22H (81kW)	76-78		R		**CF607**	Loc	Ø 14,28	
Princess II 10/78-10/82								
1.7 Eng.P (54-65kW)	78-82		R		**CF607**	Loc	Ø 14,28	
2.0 Eng.20H/ R (69kW)	78-82		R		**CF607**	Loc	Ø 14,28	
2.2 Eng.E2.2 (82kW)	78-82		R		**CF607**	Loc	Ø 14,28	
Sherpa 1/74-1/89								
185 Eng.18V (57-70kW)	74-80		F	L	**CF415**		Ø 22,20	Front Drum Brake, Only 215-240-250
	74-78		F	L	**CF720**		Ø 23,81	Front Drum Brake, Only 185-220
	74-80		F	R	**CF414**		Ø 22,20	Front Drum Brake, Only 215-240-250
	74-78		F	R	**CF719**		Ø 23,81	Front Drum Brake, Only 185-220
	74-80		R		**CF419**		Ø 19,05	Front Drum Brake, Only 185-220-215-240-250
	80-85		R		**CF388**		Ø 20,32	Front Disc Brake
	85-89		R		**CF202**		Ø 20,32	
200 Eng.20H/ R (69-77kW)	74-80		F	L	**CF415**		Ø 22,20	Front Drum Brake, Only 215-240-250
	74-78		F	L	**CF720**		Ø 23,81	Front Drum Brake, Only 185-220
	74-80		F	R	**CF414**		Ø 22,20	Front Drum Brake, Only 215-240-250
	74-78		F	R	**CF719**		Ø 23,81	Front Drum Brake, Only 185-220
	74-80		R		**CF419**		Ø 19,05	Front Drum Brake, Only 185-220-215-240-250
	80-85		R		**CF388**		Ø 20,32	Front Disc Brake
	85-89		R		**CF202**		Ø 20,32	
200 Eng.P (64kW)	74-80		F	L	**CF415**		Ø 22,20	Front Drum Brake, Only 215-240-250
	74-78		F	L	**CF720**		Ø 23,81	Front Drum Brake, Only 185-220
	74-80		F	R	**CF414**		Ø 22,20	Front Drum Brake, Only 215-240-250

ROVER

		Spare Parts	F/R	L/R	FRITECH ref.		DIMENSIONS mm.	NOTE
200 Eng.P (64kW)	74-78		F	R	**CF719**		Ø 23,81	Front Drum Brake, Only 185-220
	74-80		R		**CF419**		Ø 19,05	Front Drum Brake, Only 185-220-215-240-250
	80-85		R		**CF388**		Ø 20,32	Front Disc Brake
	85-89		R		**CF202**		Ø 20,32	
220 Eng.18V (57-70kW)	74-80		F	L	**CF415**		Ø 22,20	Front Drum Brake, Only 215-240-250
	74-78		F	L	**CF720**		Ø 23,81	Front Drum Brake, Only 185-220
	74-80		F	R	**CF414**		Ø 22,20	Front Drum Brake, Only 215-240-250
	74-78		F	R	**CF719**		Ø 23,81	Front Drum Brake, Only 185-220
	74-80		R		**CF419**		Ø 19,05	Front Drum Brake, Only 185-220-215-240-250
	80-85		R		**CF388**		Ø 20,32	Front Disc Brake
	85-89		R		**CF202**		Ø 20,32	
230 Eng.20H/ R (69-77kW)	74-80		F	L	**CF415**		Ø 22,20	Front Drum Brake, Only 215-240-250
	74-78		F	L	**CF720**		Ø 23,81	Front Drum Brake, Only 185-220
	74-80		F	R	**CF414**		Ø 22,20	Front Drum Brake, Only 215-240-250
	74-78		F	R	**CF719**		Ø 23,81	Front Drum Brake, Only 185-220
	74-80		R		**CF419**		Ø 19,05	Front Drum Brake, Only 185-220-215-240-250
	80-85		R		**CF388**		Ø 20,32	Front Disc Brake
	85-89		R		**CF202**		Ø 20,32	
230 Eng.P (64kW)	74-80		F	L	**CF415**		Ø 22,20	Front Drum Brake, Only 215-240-250
	74-78		F	L	**CF720**		Ø 23,81	Front Drum Brake, Only 185-220
	74-80		F	R	**CF414**		Ø 22,20	Front Drum Brake, Only 215-240-250
	74-78		F	R	**CF719**		Ø 23,81	Front Drum Brake, Only 185-220
	74-80		R		**CF419**		Ø 19,05	Front Drum Brake, Only 185-220-215-240-250
	80-85		R		**CF388**		Ø 20,32	Front Disc Brake
	85-89		R		**CF202**		Ø 20,32	
240 Eng.18V (57-70kW)	74-80		F	L	**CF415**		Ø 22,20	Front Drum Brake, Only 215-240-250
	74-78		F	L	**CF720**		Ø 23,81	Front Drum Brake, Only 185-220
	74-80		F	R	**CF414**		Ø 22,20	Front Drum Brake, Only 215-240-250
	74-78		F	R	**CF719**		Ø 23,81	Front Drum Brake, Only 185-220
	74-80		R		**CF419**		Ø 19,05	Front Drum Brake, Only 185-220-215-240-250
	80-85		R		**CF388**		Ø 20,32	Front Disc Brake
	85-89		R		**CF202**		Ø 20,32	
255 Eng.20H/ R (69-77kW)	74-80		F	L	**CF415**		Ø 22,20	Front Drum Brake, Only 215-240-250
	74-78		F	L	**CF720**		Ø 23,81	Front Drum Brake, Only 185-220
	74-80		F	R	**CF414**		Ø 22,20	Front Drum Brake, Only 215-240-250
	74-78		F	R	**CF719**		Ø 23,81	Front Drum Brake, Only 185-220
	74-80		R		**CF419**		Ø 19,05	Front Drum Brake, Only 185-220-215-240-250
	80-85		R		**CF388**		Ø 20,32	Front Disc Brake
	85-89		R		**CF202**		Ø 20,32	
255 Eng.P (64kW)	74-80		F	L	**CF415**		Ø 22,20	Front Drum Brake, Only 215-240-250
	74-78		F	L	**CF720**		Ø 23,81	Front Drum Brake, Only 185-220
	74-80		F	R	**CF414**		Ø 22,20	Front Drum Brake, Only 215-240-250
	74-78		F	R	**CF719**		Ø 23,81	Front Drum Brake, Only 185-220
	74-80		R		**CF419**		Ø 19,05	Front Drum Brake, Only 185-220-215-240-250
	80-85		R		**CF388**		Ø 20,32	Front Disc Brake
	85-89		R		**CF202**		Ø 20,32	
280 Eng.20H/ R (69-77kW)	82-89		R		**CF163**		Ø 17,46	Exc. V8
285 Eng.20H/ R (69-77kW)	82-89		R		**CF163**		Ø 17,46	Exc. V8
285	82-89		R		**CF163**		Ø 17,46	Exc. V8
310 Eng.20H/ R (69-77kW)	82-89		R		**CF163**		Ø 17,46	Exc. V8
310	82-89		R		**CF163**		Ø 17,46	Exc. V8
350 Eng.20H/ R (69-77kW)	82-89		R		**CF163**		Ø 17,46	Exc. V8
350	82-89		R		**CF163**		Ø 17,46	Exc. V8
Sprite Mk II 1/62-12/70								
1.1 Eng.10H (33-36-40-41kW)	62-66		R		**CF191**	Loc	Ø 19,05	
1.3	66-70		R		**CF191**	Loc	Ø 19,05	
Stag 1/70-12/77								
3.0 Eng.3.0 OHC (107kW)	70-77		R		**CF444**		Ø 20,33	
Toledo 10/70-12/77								
1.3 Eng.FM2/ 3/ FM8 (43-46-56kW)	73-77		R		**CF261**		Ø 17,78	Alu, Front Disc Brake
	70-72		R		**CF335**		Ø 19,05	Alu, Front Drum Brake
TR 4a 12/65-12/67								
2.2 Eng.HE0H (76kW)	65-67		R		**CF224**		Ø 17,78	Alu

ROVER

		Spare Parts	F/R	L/R	FRITECH ref.		DIMENSIONS mm.	NOTE
TR 5 (250) 1/67-12/68								
2.5 Eng.CR1/ MD9 (70-76-90-110-123kW)	67-68		R		**CF224**		Ø 17,78	Alu
2.5 PI (105kW)	67-68		R		**CF224**		Ø 17,78	Alu
TR 6 1/69-12/76								
2.5 Eng.CR1/ MD9 (70-76-90-110-123kW)	69-76		R		**CF224**		Ø 17,78	Alu
TR 7 1/75-12/81								
2.0, Coupe Eng.PE124 (78-94kW)	79-81		R		**CF443**		Ø 17,46	
Vitesse 1/62-12/75								
1.3	65-71		R		**CF261**		Ø 17,78	Alu
1.6, Cabrio (51kW)	62-66		R		**CF261**		Ø 17,78	Alu
2.0, Cabrio Eng.HB1/ KE1 (69-70kW)	67-75		R		**CF335**		Ø 19,05	Alu
2.0, Cabrio Eng.HB1HE (77kW)	68-71		R		**CF335**		Ø 19,05	Alu

SAAB

90 8/84-8/87								
2.0 Eng.B20I (74kW)	10/84-87				**PF061**		Ø 20,64	
900 I, SW Coupe 9/78-6/94								
2.0 c Eng.B20/ B201/ BI20/ BS120 BT20 (74-79-80-85-87-93-107kW)	78-84				**PF062**		Ø 22,20	
2.0 c Eng.B20/ B201XC (74kW)	79-85				**PF062**		Ø 22,20	
2.0 EMS (Exc. SW) Eng.B20/ B201/ BI20/ BS120 BT20 (74-79-80-85-87-93-107kW)	79-80				**PF062**		Ø 22,20	
2.0 i Eng.B201XI (85kW)	80-85				**PF062**		Ø 22,20	
2.0 T. Eng.B20/ B201/ BI20/ BS120 BT20 (74-79-80-85-87-93-107kW)	78-85				**PF062**		Ø 22,20	
2.0-16 Eng.B202X/ I (92-118-129kW)	86-88				**PF062**		Ø 22,20	
9-3 I (YS3D), Cabrio 2/98-9/02								
2.0 T. Eng.B204E (110-113kW)	98-02				**PF642**	Ate	Ø 23,81	Alu, Design Edi
2.0 T. Eng.B204L (136kW)	01-02				**PF642**	Ate	Ø 23,81	Alu
2.0 T. Eng.B205L/ R (151kW)	01-				**PF642**	Ate	Ø 23,81	Alu
2.0-16 Eng.B204I (96kW)	01-02				**PF642**	Ate	Ø 23,81	Alu
2.2 TiD (Exc. Cabrio) Eng.D223L (92kW)	01-				**PF642**	Ate	Ø 23,81	Alu
2.2 TiD (Exc. Cabrio) Eng.X22DTH (85kW)	01-				**PF642**	Ate	Ø 23,81	Alu
2.3 i Eng.B234I (108-110kW)	01-02				**PF642**	Ate	Ø 23,81	Alu
9-3 II (YS3F), SW, Cabrio 9/02-12/13								
1.8 i Eng.Z18XE (90kW)	04-				**PF521**	Trw	Ø 25,40	Alu, +ESP, LHD
	04-				**PF520**	Trw	Ø 25,40	Alu, -ESP, LHD
1.8 T. Eng.B207E (110kW)	02-				**PF521**	Trw	Ø 25,40	Alu, +ESP, LHD
	02-				**PF520**	Trw	Ø 25,40	Alu, -ESP, LHD
1.9 TiD Eng.Z19DT (88kW)	04-				**PF521**	Trw	Ø 25,40	Alu, +ESP, LHD
1.9 TiD Eng.Z19DTH (110kW)	04-				**PF521**	Trw	Ø 25,40	Alu, +ESP, LHD
	04-				**PF520**	Trw	Ø 25,40	Alu, -ESP, LHD
1.9 TTiD, XWD Eng.Z19DTR (132kW)	08-				**PF521**	Trw	Ø 25,40	Alu, +ABS, +ESP, +VDC
2.0 T, XWD Eng.B207R (154kW)	02-				**PF521**	Trw	Ø 25,40	Alu, +ESP, LHD
	02-				**PF520**	Trw	Ø 25,40	Alu, -ESP, LHD
2.0 T. Eng.B207L (129kW)	02-				**PF521**	Trw	Ø 25,40	Alu, +ESP, LHD
	02-				**PF520**	Trw	Ø 25,40	Alu, -ESP, LHD
2.2 TiD Eng.D223L (85-88-92kW)	02-				**PF521**	Trw	Ø 25,40	Alu, +ESP, LHD
	02-				**PF520**	Trw	Ø 25,40	Alu, -ESP, LHD
9-5 I (YS3E), SW 9/97-4/10								
2.3 T. Eng.B235R (169kW)	99-01				**PF522**	Ate	Ø 25,40	Alu, LHD
95 SW 10/65-12/78								
1.5 V4 Eng.FordV4 (46-48-50kW)	65-66		F	L	**CF334**	Loc	Ø 20,32	
	65-66		F	R	**CF336**	Loc	Ø 20,32	
	65-66		R		**CF191**	Loc	Ø 19,05	
96 10/65-8/80								
1.5 GT Eng.FordV4 (50kW)	65-		R		**CF191**	Loc	Ø 19,05	
1.5 V4 Eng.FordV4 (46-48-50kW)	65-66		F	L	**CF334**	Loc	Ø 20,32	
	65-66		F	R	**CF336**	Loc	Ø 20,32	
			R		**CF262**	Loc	Ø 15,87	Ch 9580001-
	65-		R		**CF191**	Loc	Ø 19,05	Ch -9580000
99 4/72-12/84								
2.0 Eng.B20C/ B20I (74-85-87-80-93kW)	10/80-84				**PF061**		Ø 20,64	
	10/74-9/80				**PF062**		Ø 22,20	

SEAT

		Spare Parts	F/R	L/R	FRITECH ref.		DIMENSIONS mm.	NOTE
124 1/68-10/80								
1.2, SW Eng.021A1/ FA (48kW)	78-80		R		**CF259**		Ø 22,22	
	78-80				**PF015**		Ø 19,05	Base, FL / Exc. 1.4
	78-80				**PF066**		Ø 19,05	Sin Master Vac, Exc. 1.4
	78-80				**CT001**	Benditalia	Ø 25,40	Alu
1.2, SW Eng.124A/ B (44kW)	68-76		R		**CF259**		Ø 22,22	
	68-76				**PF015**		Ø 19,05	Base, FL / Exc. 1.4
	68-76				**PF066**		Ø 19,05	Sin Master Vac, Exc. 1.4
	68-76				**CT001**	Benditalia	Ø 25,40	Alu
1.43 Eng.124B2.000 (55kW)	70-76		R		**CF002**		Ø 19,05	
	70-76				**PF473**		Ø 19,05	
1.43 Especial (70kW)	70-76		R		**CF002**		Ø 19,05	
	70-76				**PF473**		Ø 19,05	
127 (127A) 4/72-12/82								
0.9 Eng.A112A5 (33kW)	78-82		R		**CF002**		Ø 19,05	
	78-82				**PF014**		Ø 19,05	
	82-12/82				**PF047**		Ø 19,05	
	78-82				**CT001**	Benditalia	Ø 25,40	Alu
1.0 Eng.127A.000 (38kW)	78-82		R		**CF002**		Ø 19,05	
	78-82				**PF014**		Ø 19,05	
	82-12/82				**PF047**		Ø 19,05	
	78-82				**CT001**	Benditalia	Ø 25,40	Alu
128 1/76-12/80								
1.2 (49kW)	76-80		R		**CF002**		Ø 19,05	
	76-77				**PF014**		Ø 19,05	
	77-80				**PF003**		Ø 19,05	
	76-80				**CT001**	Benditalia	Ø 25,40	Alu
1.4 (57kW)	76-80		R		**CF002**		Ø 19,05	
	76-77				**PF014**		Ø 19,05	
	77-80				**PF003**		Ø 19,05	
	76-80				**CT001**	Benditalia	Ø 25,40	Alu
131 10/74-12/86								
1.3 Mirafiori Eng.131A6.000 (40kW)	74-81		R		**CF357**		Ø 22,22	
1.3 Super Mirafiori Eng.131B.000 (57kW)	78-80		R		**CF357**		Ø 22,22	
1.4 Mirafiori Eng.131C1.000 (51kW)	80-84		R		**CF259**		Ø 22,22	
	80-84				**PF047**		Ø 19,05	
	80-84				**PF068**		Ø 19,05	
	80-84				**CT002**		Ø 25,40	Alu, M10x1,25
1.6 Eng.132BBOAO (71kW)	82-83		R		**CF259**		Ø 22,22	
	83-85		R		**CF357**		Ø 22,22	Supermirafiori, Diplomatic
	82-83				**PF047**		Ø 19,05	
	82-83				**PF068**		Ø 19,05	
	82-83				**CT002**		Ø 25,40	Alu, M10x1,25
	83-85				**CT007**		Ø 25,40	Alu, Supermirafiori, Diplomatic, M10x1
132 5/73-12/82								
1.6 Eng.132AB (72kW)	73-80		R		**CF259**		Ø 22,22	
	73-80				**PF068**		Ø 19,05	
	73-80				**CT001**	Benditalia	Ø 25,40	Alu
1.8 Eng.132A/ B/ C1 (77kW)	73-80		R		**CF259**		Ø 22,22	
	73-80				**PF068**		Ø 19,05	
	73-80				**CT001**	Benditalia	Ø 25,40	Alu
133 5/74-11/79								
0.8 Eng.DG/ 100GL6 (25kW)	74-79		F		**CF591**		Ø 22,22	
	74-79		R		**CF002**		Ø 19,05	
	74-79				**PF013**		Ø 19,05	
600 3/55-4/70								
0.8 D Eng.100D (17kW)	63-70		F		**CF591**		Ø 22,22	
	63-70		R		**CF002**		Ø 19,05	
	63-70				**PF011**		Ø 19,05	
850 1/66-7/75								
0.9 Eng.100G (25-27kW)	66-75		F		**CF591**		Ø 22,22	
	66-75		R		**CF002**		Ø 19,05	

		Spare Parts	F/R	L/R	FRITECH ref.		DIMENSIONS mm.	NOTE
0.9 Eng.100G (25-27kW)	66-75				**PF013**		Ø 19,05	
0.9 Eng.100GB (35kW)	66-74		F		**CF591**		Ø 22,22	
	66-74		R		**CF002**		Ø 19,05	
	66-74				**PF013**		Ø 19,05	
Alhambra I (7V8, 7V9) 4/96-9/10								
1.8 T. 20v Eng.AJH/ AWC (110kW)	6/00-				**PF822**	Ate	Ø 25,40	Ch -7M3515799, Alu, Cod. PR ID 1AT, +ABS, +ESP
	06-				**PF823**	Ate	Ø 25,40	Ch 7M3515800-, Alu, Cod. ID PR 1AC, +ABS, +ESP
	97-				**PF824**	Ate	Ø 25,40	Ch 7M3515800-, Alu, Cod. ID PR 1AT, +ABS, +ESP
	6/00-				**PF600**	Ate	Ø 25,40	Alu, +ABS, -ESP
	97-				**PF253**	Ate	Ø 23,81	Ch -7MW507041, +ABS
	-5/00				**PF309**	Ate	Ø 23,81	Ch 7MW507042-, -ABS
	97-10				**PZ091**	Fte	Ø 19,05	Alu
1.9 TDi Eng.1Z/ AHU/ ANU (66kW)	06-				**PF823**	Ate	Ø 25,40	Ch 7M3515800-, Alu, Cod. ID PR 1AC, +ABS, +ESP
	96-				**PF824**	Ate	Ø 25,40	Ch 7M3515800-, Alu, Cod. ID PR 1AT, +ABS, +ESP
	6/00-				**PF822**	Ate	Ø 25,40	Alu, +ABS, +ESP
	6/00-				**PF600**	Ate	Ø 25,40	Alu, +ABS, -ESP
	2/96-				**PF253**	Ate	Ø 23,81	Ch -7MW507041, +ABS
	-5/00				**PF309**	Ate	Ø 23,81	Ch 7MW507042-, -ABS
	96-10				**PZ091**	Fte	Ø 19,05	Alu
1.9 TDi Eng.AFN (81kW)	6/00-				**PF822**	Ate	Ø 25,40	Alu, +ABS, +ESP
	2/96-				**PF253**	Ate	Ø 23,81	Ch -7MW507041, +ABS
	-5/00				**PF309**	Ate	Ø 23,81	Ch 7MW507042-, -ABS
	8/96-6/00				**PZ091**	Fte	Ø 19,05	Alu
1.9 TDi Eng.BTB (110kW)	5/05-				**PZ091**	Fte	Ø 19,05	Alu
1.9 TDi, 4motion Eng.AUY/ BVK (85kW)	00-				**PF824**	Ate	Ø 25,40	Ch 7M3515800-, Alu, Cod. ID PR 1AT, +ABS, +ESP
	06-				**PF823**	Ate	Ø 25,40	Ch 7M3515800-, Alu, Cod. ID PR 1AC, +ABS, +ESP
	6/00-				**PF822**	Ate	Ø 25,40	Alu, +ABS, +ESP
	6/00-				**PF600**	Ate	Ø 25,40	Alu, +ABS, -ESP
	00-10				**PZ091**	Fte	Ø 19,05	Alu
1.9 TDi, 4x4 Eng.ASZ (96kW)	02-				**PF824**	Ate	Ø 25,40	Ch 7M3515800-, Alu, Cod. ID PR 1AT, +ABS, +ESP
	06-				**PF823**	Ate	Ø 25,40	Ch 7M3515800-, Alu, Cod. ID PR 1AC, +ABS, +ESP
	11/02-				**PF822**	Ate	Ø 25,40	Alu, +ABS, +ESP
	11/02-				**PF600**	Ate	Ø 25,40	Alu, +ABS, -ESP
	-11/08				**PZ091**	Fte	Ø 19,05	Alu
2.0 i Eng.ADY/ ATM (85kW)	06-				**PF823**	Ate	Ø 25,40	Ch 7M3515800-, Alu, Cod. ID PR 1AC, +ABS, +ESP
	96-				**PF824**	Ate	Ø 25,40	Ch 7M3515800-, Alu, Cod. ID PR 1AT, +ABS, +ESP
	6/00-				**PF822**	Ate	Ø 25,40	Alu, +ABS, +ESP
	6/00-				**PF600**	Ate	Ø 25,40	Alu, +ABS, -ESP
	96-				**PF253**	Ate	Ø 23,81	Ch -7MW507041, +ABS
	-5/00				**PF309**	Ate	Ø 23,81	Ch 7MW507042-, -ABS
	96-10				**PZ091**	Fte	Ø 19,05	Alu
2.0 TDi Eng.BRT (103kW)	05-				**PF824**	Ate	Ø 25,40	Ch 7M3515800-, Alu, Cod. ID PR 1AT, +ABS, +ESP
	06-				**PF823**	Ate	Ø 25,40	Ch 7M3515800-, Alu, Cod. ID PR 1AC, +ABS, +ESP
	05-				**PF822**	Ate	Ø 25,40	Alu, +ABS, +ESP
	05-				**PF600**	Ate	Ø 25,40	Alu, +ABS, -ESP
	12/05-				**PZ091**	Fte	Ø 19,05	Alu
2.8 V6 Eng.AYL (150kW)	6/00-				**PF824**	Ate	Ø 25,40	Ch 7M3515800-, Alu, Cod. ID PR 1AT, +ABS, +ESP
	6/00-				**PF822**	Ate	Ø 25,40	Alu, +ABS, +ESP
	6/00-				**PF600**	Ate	Ø 25,40	Alu, +ABS, -ESP
	00-10				**PZ091**	Fte	Ø 19,05	Alu
Altea (5P1) / Altea XL 3/04-8/15								
1.2 TSi Eng.CBZB (77kW)	10-				**PF869**	Ate	Ø 22,20	Alu
	10-6/11				**CZ080**	Sachs	Ø 19,05	Alu
1.4 16v Eng.BXW/ CGGB (63kW)	07-				**PF869**	Ate	Ø 22,20	Alu
	07-				**CZ077**	Fte	Ø 19,05	Pla
	07-				**CZ099**	Fte	Ø 19,05	
	07-6/11				**CZ080**	Sachs	Ø 19,05	Alu, Only Mod. XL 5/08-6/11
1.4 TSi Eng.CAXA/ CAXC (92kW)	07-				**PF869**	Ate	Ø 22,20	Alu, Freetrack, XL
	07-				**CZ077**	Fte	Ø 19,05	Pla
	07-				**CZ099**	Fte	Ø 19,05	
	07-6/11				**CZ080**	Sachs	Ø 19,05	Alu
1.6 Eng.BGU/ BSE/ BSF/ CCSA/ CMXA (75kW)	04-				**PF647**	Ate	Ø 22,20	Alu
	06-				**PF869**	Ate	Ø 22,20	Alu, XL
	04-				**PF646**	Bch	Ø 22,20	Alu

SEAT

		Spare Parts	F/R	L/R	FRITECH ref.		DIMENSIONS mm.	NOTE
1.6 Eng.BGU/ BSE/ BSF/ CCSA/ CMXA (75kW)	04-				**CZ077**	Fte	Ø 19,05	Pla
	04-				**CZ099**	Fte	Ø 19,05	
	04-12/06				**CZ080**	Sachs	Ø 19,05	Alu
1.6 LPG Eng.CHGA (75kW)	09-				**PF869**	Ate	Ø 22,20	Alu, XL
1.6 Multifuel Eng.CCSA (75kW)	06-				**PF647**	Ate	Ø 22,20	Alu
	06-				**PF869**	Ate	Ø 22,20	Alu, XL
	06-				**PF646**	Bch	Ø 22,20	Alu
	06-				**CZ077**	Fte	Ø 19,05	Pla
	06-				**CZ099**	Fte	Ø 19,05	
	06-12/06				**CZ080**	Sachs	Ø 19,05	Alu
1.6 TDi Eng.CAYB (66kW)	10-				**PF869**	Ate	Ø 22,20	Alu, XL
	10-6/11				**CZ080**	Sachs	Ø 19,05	Alu
1.6 TDi Eng.CAYC (77kW)	10-				**PF869**	Ate	Ø 22,20	Alu, XL
	10-6/11				**CZ080**	Sachs	Ø 19,05	Alu
1.8 16v TFSI Eng.BYT/ BZB/ CDAA (118kW)	07-				**PF869**	Ate	Ø 22,20	Alu, Freetrack, XL
	07-				**CZ077**	Fte	Ø 19,05	Pla
	07-				**CZ099**	Fte	Ø 19,05	
	07-6/11				**CZ080**	Sachs	Ø 19,05	Alu
1.9 TDi Eng.BKC/ BJB/ BLS/ BXE (77kW)	04-				**PF647**	Ate	Ø 22,20	Alu
	06-				**PF869**	Ate	Ø 22,20	Alu, XL
	04-				**PF646**	Bch	Ø 22,20	Alu
	04-				**CZ077**	Fte	Ø 19,05	Pla
	04-				**CZ099**	Fte	Ø 19,05	
	04-6/11				**CZ080**	Sachs	Ø 19,05	Alu
1.9 TDi Eng.BXF (66kW)	10-				**PF869**	Ate	Ø 22,20	Alu, XL
	10-6/11				**CZ080**	Sachs	Ø 19,05	Alu
2.0 FSI Eng.BLR/ BLY/ BVY/ BVZ (110kW)	04-				**PF647**	Ate	Ø 22,20	Alu
	06-				**PF869**	Ate	Ø 22,20	Alu, XL
	04-				**PF646**	Bch	Ø 22,20	Alu
	04-				**CZ077**	Fte	Ø 19,05	Pla
	04-				**CZ099**	Fte	Ø 19,05	
	04-				**CZ080**	Sachs	Ø 19,05	Alu
2.0 TDi Eng.AZV (100kW)	04-				**PF647**	Ate	Ø 22,20	Alu
	04-				**PF646**	Bch	Ø 22,20	Alu
	04-				**CZ080**	Sachs	Ø 19,05	Alu
2.0 TDi DPF, 4WD Eng.BMN/ CEGA (125kW)	06-				**PF869**	Ate	Ø 22,20	Alu, Freetrack, XL
	05-6/11				**CZ080**	Sachs	Ø 19,05	Alu
2.0 TDi,4WD Eng.BKD/ BMM/ CFHC (103kW)	04-				**PF647**	Ate	Ø 22,20	Alu
	06-				**PF869**	Ate	Ø 22,20	Alu, Freetrack, XL
	04-				**PF646**	Bch	Ø 22,20	Alu
	04-6/11				**CZ080**	Sachs	Ø 19,05	Alu
2.0 TFSi 4WD Eng.CCZB (155kW)	09-6/11				**CZ080**	Sachs	Ø 19,05	Alu
2.0 TFSi FR, 4WD Eng.BWA (147kW)	05-				**PF869**	Ate	Ø 22,20	Alu, Freetrack, XL
	05-				**CZ080**	Sachs	Ø 19,05	Alu
Arosa (6H) 5/97-12/04								
1.0 Eng.AHT (37kW)	97-		R		**CF080**		Ø 15,87	
	97-		R		**CF725**		Ø 15,87	Alu
	97-				**PF310**	Ate	Ø 22,20	+ABS, RHD
	97-				**PF494**	Ate	Ø 22,20	Alu, +ABS, LHD
	97-				**PF041**	Ate	Ø 20,64	-ABS
	97-				**PF231**	Ate	Ø 20,64	Alu, -ABS
1.0 i Eng.AER/ ALD/ ALL/ ANV/ AUC (37kW)	97-		R		**CF080**		Ø 15,87	
	97-		R		**CF725**		Ø 15,87	Alu
	97-				**PF310**	Ate	Ø 22,20	+ABS, RHD
	97-				**PF494**	Ate	Ø 22,20	Alu, +ABS, LHD
	97-				**PF041**	Ate	Ø 20,64	-ABS
	97-				**PF231**	Ate	Ø 20,64	Alu, -ABS
1.4 Eng.AEX/ AKV/ APQ (44kW)	97-		R		**CF080**		Ø 15,87	
	97-		R		**CF725**		Ø 15,87	Alu
	97-				**PF310**	Ate	Ø 22,20	+ABS, RHD
	97-				**PF494**	Ate	Ø 22,20	Alu, +ABS, LHD
	97-				**PF041**	Ate	Ø 20,64	-ABS
	97-				**PF231**	Ate	Ø 20,64	Alu, -ABS

		Spare Parts	F/R	L/R	FRITECH ref.		DIMENSIONS mm.	NOTE
1.4 Eng.AKK/ AUD (44kW)	97-		R		**CF080**		Ø 15,87	
	97-		R		**CF725**		Ø 15,87	Alu
	97-				**PF310**	Ate	Ø 22,20	+ABS, RHD
	97-				**PF494**	Ate	Ø 22,20	Alu, +ABS, LHD
	97-				**PF041**	Ate	Ø 20,64	-ABS
	97-				**PF231**	Ate	Ø 20,64	Alu, -ABS
1.4 Eng.ANW (44kW)	97-		R		**CF080**		Ø 15,87	
	97-		R		**CF725**		Ø 15,87	Alu
	97-				**PF310**	Ate	Ø 22,20	+ABS, RHD
	97-				**PF494**	Ate	Ø 22,20	Alu, +ABS, LHD
	97-				**PF041**	Ate	Ø 20,64	-ABS
	97-				**PF231**	Ate	Ø 20,64	Alu, -ABS
1.4 16v Eng.AFK/ ANM/ AQQ/ AUB (74kW)	1/00-		R		**CF080**		Ø 15,87	+ABS
	1/00-		R		**CF725**		Ø 15,87	Alu, +ABS
	1/00-				**PF310**	Ate	Ø 22,20	+ABS, RHD
	1/00-				**PF494**	Ate	Ø 22,20	Alu, +ABS, LHD
	1/00-				**PF041**	Ate	Ø 20,64	-ABS
	1/00-				**PF231**	Ate	Ø 20,64	Alu, -ABS
1.4 TDi Eng.AMF (55kW)	1/00-		R		**CF000**		Ø 17,46	+ABS
	1/00-		R		**CF239**		Ø 17,46	Alu, +ABS
	1/00-		R		**CF080**		Ø 15,87	
	1/00-		R		**CF725**		Ø 15,87	Alu
	1/00-				**PF310**	Ate	Ø 22,20	+ABS, RHD
	1/00-				**PF494**	Ate	Ø 22,20	Alu, +ABS, LHD
	1/00-				**PF041**	Ate	Ø 20,64	-ABS
	1/00-				**PF231**	Ate	Ø 20,64	Alu, -ABS
	1/00-				**PZ148**	Sachs	Ø 15,87	
1.7 SDi Eng.AKU (44kW)	97-		R		**CF080**		Ø 15,87	
	97-		R		**CF725**		Ø 15,87	Alu
	97-				**PF310**	Ate	Ø 22,20	+ABS, RHD
	97-				**PF494**	Ate	Ø 22,20	Alu, +ABS, LHD
	97-				**PF041**	Ate	Ø 20,64	-ABS
	97-				**PF231**	Ate	Ø 20,64	Alu, -ABS
Cordoba I (6K2/C2/6K5), Vario 2/93-6/99								
1.0 i Eng.AER/ ALD/ ALL/ ANV/ AUC (37kW)	96-99		R		**CF239**		Ø 17,46	Alu
	96-99				**PF041**	Ate	Ø 20,64	-ABS
	96-99				**PF231**	Ate	Ø 20,64	Alu
1.4 Eng.AEX/ AKV/ ANX/ APQ (44kW)	96-99		R		**CF000**		Ø 17,46	-ABS
	96-99		R		**CF239**		Ø 17,46	Alu, -ABS
	96-99				**PF041**	Ate	Ø 20,64	-ABS
	96-99				**PF231**	Ate	Ø 20,64	Alu
1.4 Eng.AKK/ AUD (44kW)	94-6/99		R		**CF000**		Ø 17,46	-ABS
	94-6/99		R		**CF239**		Ø 17,46	Alu, -ABS
	94-6/99				**PF041**	Ate	Ø 20,64	-ABS
	94-6/99				**PF231**	Ate	Ø 20,64	Alu
1.4 Eng.ANW (44kW)	96-99		R		**CF000**		Ø 17,46	-ABS
	96-99		R		**CF239**		Ø 17,46	Alu, -ABS
	96-99				**PF041**	Ate	Ø 20,64	-ABS
	96-99				**PF231**	Ate	Ø 20,64	Alu
1.4 i Eng.ABD (44kW)	94-6/99		R		**CF000**		Ø 17,46	-ABS
	94-6/99		R		**CF239**		Ø 17,46	Alu, -ABS
	94-6/99				**PF041**	Ate	Ø 20,64	-ABS
	94-6/99				**PF231**	Ate	Ø 20,64	Alu
1.4 i 16v Eng.AFH (74kW)	96-6/99		R		**CF000**		Ø 17,46	-ABS
	96-6/99		R		**CF239**		Ø 17,46	Alu, -ABS
	96-6/99				**PF041**	Ate	Ø 20,64	-ABS
	96-6/99				**PF231**	Ate	Ø 20,64	Alu
1.6 i Eng.AFT (74kW)	7/96-6/99		R		**CF107**		Ø 19,05	+ABS, HDB
	7/96-6/99		R		**CF121**		Ø 19,05	Alu, +ABS, HDB
	7/96-6/99		R		**CF000**		Ø 17,46	-ABS
	7/96-6/99		R		**CF239**		Ø 17,46	Alu, -ABS
	-99				**PF583**	Bch	Ø 22,20	Ch 6KX008001-, Alu, -ABS, RHD
	7/96-6/99				**PF039**	Luc	Ø 22,20	-ABS
	7/96-6/99				**PF248**	Luc	Ø 22,20	Alu, -ABS

SEAT

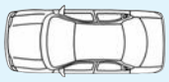		Spare Parts	F/R	L/R	FRITECH ref.		DIMENSIONS mm.	NOTE
1.6i Eng.1F (52-54-55kW)	9/96-99		R		**CF000**		Ø 17,46	-ABS
	9/96-99		R		**CF239**		Ø 17,46	Alu, -ABS
	9/96-99				**PF041**	Ate	Ø 20,64	-ABS
	9/96-99				**PF231**	Ate	Ø 20,64	Alu
1.6i Eng.ABU (55kW)	9/96-99		R		**CF000**		Ø 17,46	-ABS
	9/96-99		R		**CF239**		Ø 17,46	Alu, -ABS
	9/96-99				**PF041**	Ate	Ø 20,64	-ABS
	9/96-99				**PF231**	Ate	Ø 20,64	Alu
1.6i Eng.AEE/ ALM (55kW)	9/96-99		R		**CF000**		Ø 17,46	-ABS
	9/96-99		R		**CF239**		Ø 17,46	Alu, -ABS
	9/96-99				**PF041**	Ate	Ø 20,64	-ABS
	9/96-99				**PF231**	Ate	Ø 20,64	Alu
1.7 SDi Eng.AKU (44kW)	7/97-6/99		R		**CF107**		Ø 19,05	+ABS, HDB
	7/97-6/99		R		**CF121**		Ø 19,05	Alu, +ABS, HDB
	7/97-6/99		R		**CF000**		Ø 17,46	-ABS
	7/97-6/99		R		**CF239**		Ø 17,46	Alu, -ABS
	7/97-6/99				**PF041**	Ate	Ø 20,64	-ABS
	7/97-6/99				**PF231**	Ate	Ø 20,64	Alu
1.8 i Eng.ABS/ ADZ (66kW)	93-6/99		R		**CF107**		Ø 19,05	+ABS, HDB
	93-6/99		R		**CF121**		Ø 19,05	Alu, +ABS, HDB
	93-6/99		R		**CF000**		Ø 17,46	-ABS
	93-6/99		R		**CF239**		Ø 17,46	Alu, -ABS
	93-6/99				**PF041**	Ate	Ø 20,64	-ABS
	93-6/99				**PF231**	Ate	Ø 20,64	Alu
1.8 i 16v Eng.ADL (95kW)	93-96				**PF609**	Ate	Ø 23,81	+ABS
	93-96				**PF039**	Luc	Ø 22,20	-ABS
	93-96				**PF248**	Luc	Ø 22,20	Alu, -ABS
1.9 D Eng.1Y (47-50kW)	93-96		R		**CF107**		Ø 19,05	+ABS, HDB
	93-96		R		**CF121**		Ø 19,05	Alu, +ABS, HDB
	93-96		R		**CF000**		Ø 17,46	-ABS
	93-96		R		**CF239**		Ø 17,46	Alu, -ABS
	93-96				**PF041**	Ate	Ø 20,64	-ABS
	93-96				**PF231**	Ate	Ø 20,64	Alu
1.9 SDi Eng.AEF/ AEY (47kW)	96-6/99		R		**CF107**		Ø 19,05	+ABS, HDB
	96-6/99		R		**CF121**		Ø 19,05	Alu, +ABS, HDB
	96-6/99		R		**CF000**		Ø 17,46	-ABS
	96-6/99		R		**CF239**		Ø 17,46	Alu, -ABS
	96-6/99				**PF041**	Ate	Ø 20,64	-ABS
	96-6/99				**PF231**	Ate	Ø 20,64	Alu
1.9 TD Eng.AAZ (50-55kW)	93-96		R		**CF107**		Ø 19,05	+ABS, HDB
	93-96		R		**CF121**		Ø 19,05	Alu, +ABS, HDB
	93-96		R		**CF000**		Ø 17,46	-ABS
	93-96		R		**CF239**		Ø 17,46	Alu, -ABS
	93-96				**PF041**	Ate	Ø 20,64	-ABS
	93-96				**PF231**	Ate	Ø 20,64	Alu
1.9 TDi Eng.1Z/ AHU/ ANU (66kW)	96-99		R		**CF107**		Ø 19,05	+ABS, HDB
	96-99		R		**CF121**		Ø 19,05	Alu, +ABS, HDB
	96-99		R		**CF000**		Ø 17,46	-ABS
	96-99		R		**CF239**		Ø 17,46	Alu, -ABS
	-99				**PF583**	Bch	Ø 22,20	Ch 6KX008001-, Alu, -ABS, RHD
	96-99				**PF039**	Luc	Ø 22,20	-ABS
	96-99				**PF248**	Luc	Ø 22,20	Alu, -ABS
1.9 TDi Eng.AFN (81kW)	-99				**PF583**	Bch	Ø 22,20	Ch 6KX008001-, Alu, -ABS, RHD
	97-99				**PF039**	Luc	Ø 22,20	-ABS
	97-99				**PF248**	Luc	Ø 22,20	Alu, -ABS
2.0 i Eng.2E/ AGG/ ADY (85kW)	93-99				**PF609**	Ate	Ø 23,81	+ABS
	-99				**PF583**	Bch	Ø 22,20	Ch 6KX008001-, Alu, -ABS, RHD
	93-99				**PF039**	Luc	Ø 22,20	-ABS
	93-99				**PF248**	Luc	Ø 22,20	Alu, -ABS
2.0 i 16v Eng.ABF (110kW)	-99				**PF583**	Bch	Ø 22,20	Ch 6KX008001-, Alu, -ABS, RHD
	96-99				**PF039**	Luc	Ø 22,20	-ABS
	96-99				**PF248**	Luc	Ø 22,20	Alu, -ABS

		Spare Parts	F/R	L/R	FRITECH ref.		DIMENSIONS mm.	NOTE
Cordoba II (6K2/6K5), Vario 6/99-10/02								
1.0 Eng.ALD/ ANV/ AUC (37kW)	99-02		R		**CF000**		Ø 17,46	
	99-02		R		**CF239**		Ø 17,46	Alu
	99-02				**PF493**	Ate	Ø 23,81	Alu, +ABS
	-02				**PF583**	Bch	Ø 22,20	Ch 6KX008001-, Alu, -ABS, RHD
	99-02				**PF039**	Luc	Ø 22,20	-ABS
	99-02				**PF248**	Luc	Ø 22,20	Alu, -ABS
1.4 Eng.AEX/ AKV/ APQ (44kW)	99-02		R		**CF000**		Ø 17,46	
	99-02		R		**CF239**		Ø 17,46	Alu
	99-02				**PF493**	Ate	Ø 23,81	Alu, +ABS
	-02				**PF583**	Bch	Ø 22,20	Ch 6KX008001-, Alu, -ABS, RHD
	99-02				**PF039**	Luc	Ø 22,20	-ABS
	99-02				**PF248**	Luc	Ø 22,20	Alu, -ABS
1.4 Eng.AKK/ AUD/ ANW (44kW)	99-02		R		**CF000**		Ø 17,46	
	99-02		R		**CF239**		Ø 17,46	Alu
	99-02				**PF493**	Ate	Ø 23,81	Alu, +ABS
	-02				**PF583**	Bch	Ø 22,20	Ch 6KX008001-, Alu, -ABS, RHD
	99-02				**PF039**	Luc	Ø 22,20	-ABS
	99-02				**PF248**	Luc	Ø 22,20	Alu, -ABS
1.4 16v Eng.AFK/ ANM/ AQQ/ AUB (74kW)	00-02		R		**CF000**		Ø 17,46	
	00-02		R		**CF239**		Ø 17,46	Alu
	00-02				**PF493**	Ate	Ø 23,81	Alu, +ABS
	-02				**PF583**	Bch	Ø 22,20	Ch 6KX008001-, Alu, -ABS, RHD
	00-02				**PF039**	Luc	Ø 22,20	-ABS
	00-02				**PF248**	Luc	Ø 22,20	Alu, -ABS
1.4 16v Eng.APE/ AUA (55kW)	00-02		R		**CF000**		Ø 17,46	
	00-02		R		**CF239**		Ø 17,46	Alu
	00-02				**PF493**	Ate	Ø 23,81	Alu, +ABS
	-02				**PF583**	Bch	Ø 22,20	Ch 6KX008001-, Alu, -ABS, RHD
	00-02				**PF039**	Luc	Ø 22,20	-ABS
	00-02				**PF248**	Luc	Ø 22,20	Alu, -ABS
1.6 Eng.AEH/ AKL/ APF/ AUR (74kW)	99-02		R		**CF107**		Ø 19,05	HDB
	99-02		R		**CF121**		Ø 19,05	Alu, HDB
	99-02				**PF493**	Ate	Ø 23,81	Alu, +ABS
	-02				**PF583**	Bch	Ø 22,20	Ch 6KX008001-, Alu, -ABS, RHD
	99-02				**CZ081**	Fte	Ø 23,81	Alu
	99-02				**CZ026**		Ø 23,81	Pla
	99-02				**PZ099**	Sachs	Ø 15,87	
1.6 Eng.ALM (55kW)	99-02		R		**CF000**		Ø 17,46	
	99-02		R		**CF239**		Ø 17,46	Alu
	99-02				**PF493**	Ate	Ø 23,81	Alu, +ABS
	99-02				**PF039**	Luc	Ø 22,20	-ABS
	99-02				**PF248**	Luc	Ø 22,20	Alu, -ABS
1.8 T. 20v Cupra Eng.AQX/ AYP (115kW)	00-02				**PF493**	Ate	Ø 23,81	Alu, +ABS
	00-02				**PF039**	Luc	Ø 22,20	-ABS
	00-02				**PF248**	Luc	Ø 22,20	Alu, -ABS
	7/00-10/02				**CZ076**		Ø 19,05	
	00-10/02				**PZ099**	Sachs	Ø 15,87	
1.9 SDi Eng.AGP/ AQM (50kW)	99-02		R		**CF000**		Ø 17,46	
	99-02		R		**CF239**		Ø 17,46	Alu
	99-02				**PF493**	Ate	Ø 23,81	Alu, +ABS
	-02				**PF583**	Bch	Ø 22,20	Ch 6KX008001-, Alu, -ABS, RHD
	99-02				**PF039**	Luc	Ø 22,20	-ABS
	99-02				**PF248**	Luc	Ø 22,20	Alu, -ABS
	99-02				**CZ081**	Fte	Ø 23,81	Alu
	99-02				**CZ026**		Ø 23,81	Pla
	99-02				**PZ099**	Sachs	Ø 15,87	
1.9 TDi Eng.AGR/ ALH (66kW)	7/99-02		R		**CF000**		Ø 17,46	
	7/99-02		R		**CF239**		Ø 17,46	Alu
	99-02				**PF493**	Ate	Ø 23,81	Alu, +ABS
	-02				**PF583**	Bch	Ø 22,20	Ch 6KX008001-, Alu, -ABS, RHD
	7/99-02				**PF039**	Luc	Ø 22,20	-ABS
	7/99-02				**PF248**	Luc	Ø 22,20	Alu, -ABS
	6/99-10/02				**CZ076**		Ø 19,05	

SEAT

		Spare Parts	F/R	L/R	FRITECH ref.		DIMENSIONS mm.	NOTE
1.9 TDi Eng.AGR/ ALH (66kW)	99-02				**PZ099**	Sachs	Ø 15,87	
1.9 TDi Eng.ASK/ ASV (81kW)	99-02				**PF493**	Ate	Ø 23,81	Alu, +ABS
	-02				**PF583**	Bch	Ø 22,20	Ch 6KX008001-, Alu, -ABS, RHD
	7/99-02				**PF039**	Luc	Ø 22,20	-ABS
	7/99-02				**PF248**	Luc	Ø 22,20	Alu, -ABS
	6/99-10/02				**CZ076**		Ø 19,05	
	99-02				**PZ099**	Sachs	Ø 15,87	
Cordoba III (6L2) 10/02-12/09								
1.2 Eng.AZQ (47kW)	10/02-		R		**CF121**		Ø 19,05	Alu
	02-05				**PF993**	Bch	Ø 20,64	Alu, -ABS
	06-				**PF973**	Fte	Ø 20,64	Ch 6L7048490-, Alu, +ABS
	02-05				**PF463**	Fte	Ø 20,64	Alu, +ABS
	02-05				**PF329**	Fte	Ø 20,64	Alu, -ABS, +PS
	02-				**CZ077**	Fte	Ø 19,05	Pla
	02-				**CZ099**	Fte	Ø 19,05	
	02-				**PZ077**	Sachs	Ø 15,87	Alu
1.2 12v Eng.BXV (51kW)	07-		R		**CF239**		Ø 17,46	Alu
	06-				**PF973**	Fte	Ø 20,64	Ch 6L7048490-, Alu, +ABS
	06-				**CZ077**	Fte	Ø 19,05	Pla
	06-				**CZ099**	Fte	Ø 19,05	
	07-				**PZ077**	Sachs	Ø 15,87	Alu
1.4 16v Eng.BBY (55kW)	10/02-		R		**CF121**		Ø 19,05	Alu
	02-05				**PF993**	Bch	Ø 20,64	Alu, -ABS
	06-				**PF973**	Fte	Ø 20,64	Ch 6L7048490-, Alu, +ABS
	02-05				**PF463**	Fte	Ø 20,64	Alu, +ABS
	02-05				**PF329**	Fte	Ø 20,64	Alu, -ABS, +PS
	02-				**CZ077**	Fte	Ø 19,05	Pla
	02-				**CZ099**	Fte	Ø 19,05	
	02-				**PZ077**	Sachs	Ø 15,87	Alu
1.4 16v Eng.BBZ (74kW)	02-		R		**CF239**		Ø 17,46	Alu
	02-05				**PF993**	Bch	Ø 20,64	Alu, -ABS
	06-				**PF973**	Fte	Ø 20,64	Ch 6L7048490-, Alu, +ABS
	02-05				**PF463**	Fte	Ø 20,64	Alu, +ABS
	02-05				**PF329**	Fte	Ø 20,64	Alu, -ABS, +PS
	02-				**CZ077**	Fte	Ø 19,05	Pla
	02-				**CZ099**	Fte	Ø 19,05	
	02-				**PZ077**	Sachs	Ø 15,87	Alu
1.4 16v Eng.BXW (63kW)	07-		R		**CF239**		Ø 17,46	Alu
	06-				**PF973**	Fte	Ø 20,64	Ch 6L7048490-, Alu, +ABS
	3/07-				**CZ077**	Fte	Ø 19,05	Pla
	3/07-				**CZ099**	Fte	Ø 19,05	
	3/07-				**PZ077**	Sachs	Ø 15,87	Alu
1.4 TDi Eng.AMF (55kW)	10/02-		R		**CF121**		Ø 19,05	Alu
	02-05				**PF993**	Bch	Ø 20,64	Alu, -ABS
	06-				**PF973**	Fte	Ø 20,64	Ch 6L7048490-, Alu, +ABS
	02-05				**PF463**	Fte	Ø 20,64	Alu, +ABS
	02-05				**PF329**	Fte	Ø 20,64	Alu, -ABS, +PS
	02-				**CZ086**	Fte	Ø 19,05	Pla
	02-				**CZ098**	Fte	Ø 19,05	Alu
	02-				**PZ077**	Sachs	Ø 15,87	Alu
1.4 TDi Eng.BMS (59kW)	02-05				**PF993**	Bch	Ø 20,64	Alu, -ABS
	06-				**PF973**	Fte	Ø 20,64	Ch 6L7048490-, Alu, +ABS
	02-05				**PF329**	Fte	Ø 20,64	Alu, -ABS, +PS
	05-				**CZ086**	Fte	Ø 19,05	Pla
	05-				**CZ098**	Fte	Ø 19,05	Alu
	05-				**PZ077**	Sachs	Ø 15,87	Alu
1.4 TDi Eng.BNM (51kW)	02-05				**PF993**	Bch	Ø 20,64	Alu, -ABS
	06-				**PF973**	Fte	Ø 20,64	Ch 6L7048490-, Alu, +ABS
	02-05				**PF329**	Fte	Ø 20,64	Alu, -ABS, +PS
	05-				**CZ077**	Fte	Ø 19,05	Pla
	05-				**CZ099**	Fte	Ø 19,05	
	05-				**PZ077**	Sachs	Ø 15,87	Alu
1.6 Eng.BAH (74kW)	2/03-		R		**CF121**		Ø 19,05	Alu
	03-05				**PF993**	Bch	Ø 20,64	Alu, -ABS

		Spare Parts	F/R	L/R	FRITECH ref.		DIMENSIONS mm.	NOTE
1.6 Eng.BAH (74kW)	06-				**PF973**	Fte	Ø 20,64	Ch 6L7048490-, Alu, +ABS
	03-05				**PF463**	Fte	Ø 20,64	Alu, +ABS
	03-05				**PF329**	Fte	Ø 20,64	Alu, -ABS, +PS
	2/03-				**CZ077**	Fte	Ø 19,05	Pla
	2/03-				**CZ099**	Fte	Ø 19,05	
	2/03-				**PZ077**	Sachs	Ø 15,87	Alu
1.6 16v Eng.BTS (77kW)	06-		R		**CF239**		Ø 17,46	Alu
	06-				**CZ077**	Fte	Ø 19,05	Pla
	06-				**CZ099**	Fte	Ø 19,05	
	06-				**PZ077**	Sachs	Ø 15,87	Alu
1.9 SDi Eng.ASY (47kW)	10/02-		R		**CF121**		Ø 19,05	Alu
	02-05				**PF993**	Bch	Ø 20,64	Alu, -ABS
	06-				**PF973**	Fte	Ø 20,64	Ch 6L7048490-, Alu, +ABS
	02-05				**PF463**	Fte	Ø 20,64	Alu, +ABS
	02-05				**PF329**	Fte	Ø 20,64	Alu, -ABS, +PS
	02-				**CZ077**	Fte	Ø 19,05	Pla
	02-				**CZ099**	Fte	Ø 19,05	
	02-				**PZ077**	Sachs	Ø 15,87	Alu
1.9 TDi Eng.ASZ (96kW)	10/02-		R		**CF121**		Ø 19,05	Alu
	02-05				**PF993**	Bch	Ø 20,64	Alu, -ABS
	06-				**PF973**	Fte	Ø 20,64	Ch 6L7048490-, Alu, +ABS
	02-05				**PF463**	Fte	Ø 20,64	Alu, +ABS
	02-05				**PF329**	Fte	Ø 20,64	Alu, -ABS, +PS
	02-				**PZ077**	Sachs	Ø 15,87	Alu
1.9 TDi Eng.ATD (74kW)	10/02-		R		**CF121**		Ø 19,05	Alu
	02-05				**PF993**	Bch	Ø 20,64	Alu, -ABS
	06-				**PF973**	Fte	Ø 20,64	Ch 6L7048490-, Alu, +ABS
	02-05				**PF463**	Fte	Ø 20,64	Alu, +ABS
	02-05				**PF329**	Fte	Ø 20,64	Alu, -ABS, +PS
	02-				**CZ086**	Fte	Ø 19,05	Pla
	02-				**CZ098**	Fte	Ø 19,05	Alu
	02-				**PZ077**	Sachs	Ø 15,87	Alu
2.0 Eng.AZL/ BBX (85kW)	06-				**PF973**	Fte	Ø 20,64	Ch 6L7048490-, Alu, +ABS
	02-05				**PF463**	Fte	Ø 20,64	Alu, +ABS
	02-				**CZ077**	Fte	Ø 19,05	Pla
	02-				**CZ099**	Fte	Ø 19,05	
	02-				**PZ077**	Sachs	Ø 15,87	Alu
Exeo, ST (3R) 4/09-12/13								
1.6 Eng.ALZ (75kW)	4/09-				**PF826**	Ate	Ø 25,40	Alu
	09-				**CZ083**	Sachs	Ø 22,20	
1.8 T Eng.CFMA (110kW)	4/09-				**PF826**	Ate	Ø 25,40	Alu
	09-				**CZ083**	Sachs	Ø 22,20	
1.8 TSi Eng.CDHA (88kW)	10-				**PF826**	Ate	Ø 25,40	Alu
	10-				**PF534**	Trw	Ø 25,40	Alu
1.8 TSi Eng.CDHB (118kW)	10-				**PF826**	Ate	Ø 25,40	Alu
	10-				**PF534**	Trw	Ø 25,40	Alu
2.0 TDi Eng.CAGA/ CJCA (105kW)	4/09-				**PF826**	Ate	Ø 25,40	Alu
	09-				**CZ083**	Sachs	Ø 22,20	
2.0 TDi Eng.CAGC/ CJCC (88kW)	4/09-				**PF826**	Ate	Ø 25,40	Alu
	09-				**CZ083**	Sachs	Ø 22,20	
2.0 TDi Eng.CAHA/ CGLB (125kW)	4/09-				**PF826**	Ate	Ø 25,40	Alu
	09-				**CZ083**	Sachs	Ø 22,20	
2.0 TFSi Eng.CDND (155kW)	10-				**PF826**	Ate	Ø 25,40	Alu
	10-				**PF534**	Trw	Ø 25,40	Alu
2.0 TSi Eng.BWE (147kW)	4/09-				**PF826**	Ate	Ø 25,40	Alu
	09-				**CZ083**	Sachs	Ø 22,20	
Ibiza I (021A) 6/84-12/93								
0.9 Eng.09NCA/ A112A5 (29kW)	90-93		R		**CF201**		Ø 17,46	
	90-93		R		**CF068**		Ø 17,46	
	90-93				**PF007**	Ate	Ø 20,64	
	90-93				**CT004**		Ø 25,40	Alu
0.9 Eng.146A.000 (32kW)	86-93		R		**CF201**		Ø 17,46	
	86-93		R		**CF068**		Ø 17,46	
	86-93				**PF007**	Ate	Ø 20,64	

SEAT

		Spare Parts	F/R	L/R	FRITECH ref.		DIMENSIONS mm.	NOTE
0.9 Eng.146A.000 (32kW)	86-93				**CT004**		Ø 25,40	Alu
1.2 Eng.021A.1000 (44-46kW)	84-93		R		**CF201**		Ø 17,46	
	86-93		R		**CF068**		Ø 17,46	
	84-86		R		**CF004**		Ø 19,05	
	86-93				**PF007**	Ate	Ø 20,64	
	84-85				**PF053**		Ø 19,05	
	85-86				**PF089**		Ø 20,64	
	84-86				**CT008**		Ø 19,05	Alu
	86-93				**CT004**		Ø 25,40	Alu
1.2 i Eng.021C.1000 (52kW)	89-93		R		**CF201**		Ø 17,46	
	89-93		R		**CF068**		Ø 17,46	
	89-93				**PF007**	Ate	Ø 20,64	
	89-93				**CT004**		Ø 25,40	Alu
1.5 Eng.021A.2000 (62-63kW)	84-93		R		**CF201**		Ø 17,46	
	86-93		R		**CF068**		Ø 17,46	
	84-86		R		**CF004**		Ø 19,05	
	86-93				**PF007**	Ate	Ø 20,64	
	84-85				**PF053**		Ø 19,05	
	85-86				**PF089**		Ø 20,64	
	84-86				**CT008**		Ø 19,05	Alu
	86-93				**CT004**		Ø 25,40	Alu
1.5 i Eng.021B.2000 (74kW)	86-93		R		**CF201**		Ø 17,46	
	86-93		R		**CF068**		Ø 17,46	
	86-93				**PF007**	Ate	Ø 20,64	
	86-93				**CT004**		Ø 25,40	Alu
1.5 i Eng.021D.2000 (65kW)	86-93		R		**CF201**		Ø 17,46	
	86-93		R		**CF068**		Ø 17,46	
	86-93				**PF007**	Ate	Ø 20,64	
	86-93				**CT004**		Ø 25,40	Alu
1.5 i Kat Eng.021C.2000 (66kW)	86-93		R		**CF201**		Ø 17,46	
	86-93		R		**CF068**		Ø 17,46	
	86-93				**PF007**	Ate	Ø 20,64	
	86-93				**CT004**		Ø 25,40	Alu
1.7 Eng.021A.3000 (72kW)	91-93		R		**CF201**		Ø 17,46	
	91-93		R		**CF068**		Ø 17,46	
	91-93				**PF007**	Ate	Ø 20,64	
	91-93				**CT004**		Ø 25,40	Alu
1.7 Eng.021B.3000 (76kW)	91-93		R		**CF201**		Ø 17,46	
	91-93		R		**CF068**		Ø 17,46	
	91-93				**PF007**	Ate	Ø 20,64	
	91-93				**CT004**		Ø 25,40	Alu
1.7 D Eng.022A.5000 (40-42kW)	84-93		R		**CF201**		Ø 17,46	
	86-93		R		**CF068**		Ø 17,46	
	84-86		R		**CF004**		Ø 19,05	
	86-93				**PF007**	Ate	Ø 20,64	
	84-85				**PF053**		Ø 19,05	
	85-86				**PF089**		Ø 20,64	
	84-86				**CT008**		Ø 19,05	Alu
	86-93				**CT004**		Ø 25,40	Alu
Ibiza II (6K1) 3/93-8/99								
1.0 Eng.AAU (33kW)	93-96		R		**CF000**		Ø 17,46	
	93-96		R		**CF239**		Ø 17,46	Alu
	93-96				**PF041**	Ate	Ø 20,64	-ABS
	93-96				**PF231**	Ate	Ø 20,64	Alu
1.0 i Eng.AER/ ALD/ ALL/ ANV/ AUC (37kW)	96-99		R		**CF000**		Ø 17,46	
	96-99		R		**CF239**		Ø 17,46	Alu
	96-99				**PF041**	Ate	Ø 20,64	-ABS
	96-99				**PF231**	Ate	Ø 20,64	Alu
1.3 i Eng.AAV (40kW)	93-99		R		**CF000**		Ø 17,46	
	93-99		R		**CF239**		Ø 17,46	Alu
	93-99				**PF041**	Ate	Ø 20,64	-ABS
	93-99				**PF231**	Ate	Ø 20,64	Alu
1.4 Eng.AEX/ AKV/ APQ (44kW)	93-99		R		**CF000**		Ø 17,46	
	93-99		R		**CF239**		Ø 17,46	Alu

		Spare Parts	F/R	L/R	FRITECH ref.		DIMENSIONS mm.	NOTE
1.4 Eng.AEX/ AKV/ APQ (44kW)	93-99				**PF041**	Ate	Ø 20,64	-ABS
	93-99				**PF231**	Ate	Ø 20,64	Alu
1.4 Eng.AKK/ AUD (44kW)	93-99		R		**CF000**		Ø 17,46	
	93-99		R		**CF239**		Ø 17,46	Alu
	93-99				**PF041**	Ate	Ø 20,64	-ABS
	93-99				**PF231**	Ate	Ø 20,64	Alu
1.4 Eng.ANW (44kW)	93-99		R		**CF000**		Ø 17,46	
	93-99		R		**CF239**		Ø 17,46	Alu
	93-99				**PF041**	Ate	Ø 20,64	-ABS
	93-99				**PF231**	Ate	Ø 20,64	Alu
1.4 i Eng.ABD (44kW)	93-99		R		**CF000**		Ø 17,46	
	93-99		R		**CF239**		Ø 17,46	Alu
	93-99				**PF041**	Ate	Ø 20,64	-ABS
	93-99				**PF231**	Ate	Ø 20,64	Alu
1.4 i 16v Eng.AFH (74kW)	96-99		R		**CF000**		Ø 17,46	
	96-99		R		**CF239**		Ø 17,46	Alu
	96-99				**PF041**	Ate	Ø 20,64	-ABS
	96-99				**PF231**	Ate	Ø 20,64	Alu
1.6 i Eng.AEE/ ALM (55kW)	93-99		R		**CF000**		Ø 17,46	
	93-99		R		**CF239**		Ø 17,46	Alu
	93-99				**PF041**	Ate	Ø 20,64	-ABS
	93-99				**PF231**	Ate	Ø 20,64	Alu
1.6 i Eng.AFT (74kW)	96-99		R		**CF107**		Ø 19,05	+ABS, HDB
	96-99		R		**CF121**		Ø 19,05	Alu, +ABS, HDB
	-99				**PF583**	Bch	Ø 22,20	Ch 6KX008001-, Alu, -ABS, RHD
1.6i Eng.1F (52-54-55kW)	93-99		R		**CF000**		Ø 17,46	
	93-99		R		**CF239**		Ø 17,46	Alu
	93-99				**PF041**	Ate	Ø 20,64	-ABS
	93-99				**PF231**	Ate	Ø 20,64	Alu
1.6i Eng.ABU (55kW)	93-99		R		**CF000**		Ø 17,46	
	93-99		R		**CF239**		Ø 17,46	Alu
	93-99				**PF041**	Ate	Ø 20,64	-ABS
	93-99				**PF231**	Ate	Ø 20,64	Alu
1.7 SDi Eng.AHB/ AKU (44kW)	7/97-8/99		R		**CF000**		Ø 17,46	
	7/97-8/99		R		**CF239**		Ø 17,46	Alu
	7/97-8/99				**PF041**	Ate	Ø 20,64	-ABS
	7/97-8/99				**PF231**	Ate	Ø 20,64	Alu
1.8 i Eng.ABS/ ADZ (66kW)	93-99		R		**CF107**		Ø 19,05	+ABS, HDB
	93-99		R		**CF121**		Ø 19,05	Alu, +ABS, HDB
	93-99		R		**CF000**		Ø 17,46	
	93-99		R		**CF239**		Ø 17,46	Alu
	93-99				**PF041**	Ate	Ø 20,64	-ABS
	93-99				**PF231**	Ate	Ø 20,64	Alu
1.8 i 16v Eng.ADL (95kW)	93-96				**PF609**	Ate	Ø 23,81	+ABS
	93-96				**PF039**	Luc	Ø 22,20	-ABS
	93-96				**PF248**	Luc	Ø 22,20	Alu, -ABS
1.9 D Eng.1Y (47-50kW)	93-96		R		**CF000**		Ø 17,46	
	93-96		R		**CF239**		Ø 17,46	Alu
	93-96				**PF041**	Ate	Ø 20,64	-ABS
	93-96				**PF231**	Ate	Ø 20,64	Alu
1.9 SDi Eng.AEF/ AEY (47kW)	96-99		R		**CF000**		Ø 17,46	
	96-99		R		**CF239**		Ø 17,46	Alu
	96-99				**PF041**	Ate	Ø 20,64	-ABS
	96-99				**PF231**	Ate	Ø 20,64	Alu
1.9 TD Eng.AAZ (50-55kW)	93-96		R		**CF000**		Ø 17,46	
	93-96		R		**CF239**		Ø 17,46	Alu
	93-96				**PF041**	Ate	Ø 20,64	-ABS
	93-96				**PF231**	Ate	Ø 20,64	Alu
1.9 TDi Eng.1Z/ AHU/ ANU (66kW)	96-99		R		**CF107**		Ø 19,05	+ABS
	96-99		R		**CF121**		Ø 19,05	Alu, +ABS
	96-99		R		**CF000**		Ø 17,46	
	96-99		R		**CF239**		Ø 17,46	Alu
	96-99				**PF041**	Ate	Ø 20,64	-ABS
	96-99				**PF231**	Ate	Ø 20,64	Alu

SEAT

		Spare Parts	F/R	L/R	FRITECH ref.		DIMENSIONS mm.	NOTE
1.9 TDi Eng.1Z/ AHU/ ANU (66kW)	-99				**PF583**	Bch	Ø 22,20	Ch 6KX008001-, Alu, -ABS, RHD
1.9 TDi Eng.AFN (81kW)	-99				**PF583**	Bch	Ø 22,20	Ch 6KX008001-, Alu, -ABS, RHD
	97-99				**PF039**	Luc	Ø 22,20	-ABS
	97-99				**PF248**	Luc	Ø 22,20	Alu, -ABS
2.0 i Eng.2E/ AGG (85kW)	93-99				**PF609**	Ate	Ø 23,81	+ABS
	-99				**PF583**	Bch	Ø 22,20	Ch 6KX008001-, Alu, -ABS, RHD
	93-8/99				**PF039**	Luc	Ø 22,20	-ABS
	93-8/99				**PF248**	Luc	Ø 22,20	Alu, -ABS
2.0 i 16v Eng.ABF (110kW)	-99				**PF583**	Bch	Ø 22,20	Ch 6KX008001-, Alu, -ABS, RHD
	96-99				**PF039**	Luc	Ø 22,20	-ABS
	96-99				**PF248**	Luc	Ø 22,20	Alu, -ABS
Ibiza III (6K1) 8/99-2/02								
1.0 Eng.ALD/ ANV/ AUC (37kW)	7/99-02		R		**CF000**		Ø 17,46	
	7/99-02		R		**CF239**		Ø 17,46	Alu
	99-02				**PF493**	Ate	Ø 23,81	Alu, +ABS
	-02				**PF583**	Bch	Ø 22,20	Ch 6KX008001-, Alu, -ABS, RHD
	7/99-02				**PF039**	Luc	Ø 22,20	-ABS
	7/99-02				**PF248**	Luc	Ø 22,20	Alu, -ABS
1.0 16v Eng.AST/ AVZ (51kW)	00-02		R		**CF000**		Ø 17,46	
	00-02		R		**CF239**		Ø 17,46	Alu
	00-02				**PF493**	Ate	Ø 23,81	Alu, +ABS
	-02				**PF583**	Bch	Ø 22,20	Ch 6KX008001-, Alu, -ABS, RHD
	00-02				**PF039**	Luc	Ø 22,20	-ABS
	00-02				**PF248**	Luc	Ø 22,20	Alu, -ABS
1.4 Eng.AKK/ AUD (44kW)	8/99-02		R		**CF000**		Ø 17,46	
	8/99-02		R		**CF239**		Ø 17,46	Alu
	8/99-02		R		**CF107**		Ø 19,05	HDB
	8/99-02		R		**CF121**		Ø 19,05	Alu, HDB
	99-02				**PF493**	Ate	Ø 23,81	Alu, +ABS
	99-02				**PF583**	Bch	Ø 22,20	Alu, -ABS, RHD
	8/99-02				**PF039**	Luc	Ø 22,20	-ABS
	8/99-02				**PF248**	Luc	Ø 22,20	Alu, -ABS
1.4 Eng.ANW (44kW)	8/99-02		R		**CF000**		Ø 17,46	
	8/99-02		R		**CF239**		Ø 17,46	Alu
	8/99-02		R		**CF107**		Ø 19,05	HDB
	8/99-02		R		**CF121**		Ø 19,05	Alu, HDB
	99-02				**PF493**	Ate	Ø 23,81	Alu, +ABS
	99-02				**PF583**	Bch	Ø 22,20	Alu, -ABS, RHD
	8/99-02				**PF039**	Luc	Ø 22,20	-ABS
	8/99-02				**PF248**	Luc	Ø 22,20	Alu, -ABS
1.4 16v Eng.AFK/ ANM/ AQQ/ AUB (74kW)	8/99-02		R		**CF000**		Ø 17,46	
	8/99-02		R		**CF239**		Ø 17,46	Alu
	8/99-02		R		**CF107**		Ø 19,05	HDB
	8/99-02		R		**CF121**		Ø 19,05	Alu, HDB
	99-02				**PF493**	Ate	Ø 23,81	Alu, +ABS
	99-02				**PF583**	Bch	Ø 22,20	Alu, -ABS, RHD
	8/99-02				**PF039**	Luc	Ø 22,20	-ABS
	8/99-02				**PF248**	Luc	Ø 22,20	Alu, -ABS
1.4 16v Eng.APE (55kW)	00-02		R		**CF000**		Ø 17,46	
	00-02		R		**CF239**		Ø 17,46	Alu
	00-02		R		**CF107**		Ø 19,05	HDB
	00-02		R		**CF121**		Ø 19,05	Alu, HDB
	00-02				**PF493**	Ate	Ø 23,81	Alu, +ABS
	00-02				**PF039**	Luc	Ø 22,20	-ABS
	00-02				**PF248**	Luc	Ø 22,20	Alu, -ABS
1.4 16v Eng.AUA (55kW)	00-02		R		**CF000**		Ø 17,46	
	00-02		R		**CF239**		Ø 17,46	Alu
	00-02		R		**CF107**		Ø 19,05	HDB
	00-02		R		**CF121**		Ø 19,05	Alu, HDB
	00-02				**PF493**	Ate	Ø 23,81	Alu, +ABS
	00-02				**PF039**	Luc	Ø 22,20	-ABS
	00-02				**PF248**	Luc	Ø 22,20	Alu, -ABS
1.6 Eng.AEH/ AKL/ APF/ AUR (74kW)	7/99-02		R		**CF107**		Ø 19,05	HDB
	7/99-02		R		**CF121**		Ø 19,05	Alu, HDB

		Spare Parts	F/R	L/R	FRITECH ref.		DIMENSIONS mm.	NOTE
1.6 Eng.AEH/ AKL/ APF/ AUR (74kW)	99-02				**PF493**	Ate	Ø 23,81	Alu, +ABS
	99-02				**PF583**	Bch	Ø 22,20	Alu, -ABS, RHD
	99-02				**PF039**	Luc	Ø 22,20	-ABS
	99-02				**PF248**	Luc	Ø 22,20	Alu, -ABS
	99-02				**CZ081**	Fte	Ø 23,81	Alu
	99-02				**CZ026**		Ø 23,81	Pla
	99-02				**PZ099**	Sachs	Ø 15,87	
1.6 Eng.ALM (55kW)	8/99-02		R		**CF000**		Ø 17,46	
	8/99-02		R		**CF239**		Ø 17,46	Alu
	8/99-02		R		**CF107**		Ø 19,05	HDB
	8/99-02		R		**CF121**		Ø 19,05	Alu, HDB
	99-02				**PF493**	Ate	Ø 23,81	Alu, +ABS
	8/99-02				**PF039**	Luc	Ø 22,20	-ABS
	8/99-02				**PF248**	Luc	Ø 22,20	Alu, -ABS
1.8 T. 20v Cupra Eng.AQX/ AYP (115kW)	00-02				**PF493**	Ate	Ø 23,81	Alu, +ABS
	00-02				**PF039**	Luc	Ø 22,20	-ABS
	00-02				**PF248**	Luc	Ø 22,20	Alu, -ABS
	7/00-2/02				**CZ076**		Ø 19,05	
	00-02				**PZ099**	Sachs	Ø 15,87	
1.9 SDi Eng.AGP/ AQM (50kW)	8/99-02		R		**CF000**		Ø 17,46	
	8/99-02		R		**CF239**		Ø 17,46	Alu
	8/99-02		R		**CF107**		Ø 19,05	HDB
	8/99-02		R		**CF121**		Ø 19,05	Alu, HDB
	99-02				**PF493**	Ate	Ø 23,81	Alu, +ABS
	99-02				**PF583**	Bch	Ø 22,20	Alu, -ABS, RHD
	8/99-02				**PF039**	Luc	Ø 22,20	-ABS
	8/99-02				**PF248**	Luc	Ø 22,20	Alu, -ABS
	99-02				**CZ081**	Fte	Ø 23,81	Alu
	99-02				**CZ026**		Ø 23,81	Pla
	99-02				**PZ099**	Sachs	Ø 15,87	
1.9 TDi Eng.AGR/ ALH/ ALK (66kW)	8/99-02		R		**CF000**		Ø 17,46	
	8/99-02		R		**CF239**		Ø 17,46	Alu
	8/99-02		R		**CF107**		Ø 19,05	HDB
	8/99-02		R		**CF121**		Ø 19,05	Alu, HDB
	99-02				**PF493**	Ate	Ø 23,81	Alu, +ABS
	8/99-02				**PF039**	Luc	Ø 22,20	-ABS
	8/99-02				**PF248**	Luc	Ø 22,20	Alu, -ABS
	8/99-2/02				**CZ076**		Ø 19,05	
	99-02				**PZ099**	Sachs	Ø 15,87	
1.9 TDi Eng.ASK/ ASV (81kW)	8/99-02		R		**CF000**		Ø 17,46	
	8/99-02		R		**CF239**		Ø 17,46	Alu
	8/99-02		R		**CF107**		Ø 19,05	HDB
	8/99-02		R		**CF121**		Ø 19,05	Alu, HDB
	99-02				**PF493**	Ate	Ø 23,81	Alu, +ABS
	8/99-02				**PF039**	Luc	Ø 22,20	-ABS
	8/99-02				**PF248**	Luc	Ø 22,20	Alu, -ABS
	8/99-2/02				**CZ076**		Ø 19,05	
	99-02				**PZ099**	Sachs	Ø 15,87	
Ibiza IV (6L1) 2/02-6/08								
1.2 Eng.AZQ/ BME (47kW)	10/02-		R		**CF121**		Ø 19,05	Alu
	02-05				**PF993**	Bch	Ø 20,64	Alu, -ABS
	06-				**PF973**	Fte	Ø 20,64	Ch 6L7048490-, Alu, +ABS
	02-05				**PF463**	Fte	Ø 20,64	Alu, +ABS
	02-05				**PF329**	Fte	Ø 20,64	Alu, -ABS, +PS
	02-				**CZ077**	Fte	Ø 19,05	Pla
	02-				**CZ099**	Fte	Ø 19,05	
	02-				**PZ077**	Sachs	Ø 15,87	Alu
1.2 Eng.BBM (44kW)	07-		R		**CF239**		Ø 17,46	Ch 6L7108001-, Alu
	07-		R		**CF121**		Ø 19,05	Ch -6L7108000, Alu
	06-				**PF973**	Fte	Ø 20,64	Ch 6L7048490-, Alu, +ABS
	07-				**CZ086**	Fte	Ø 19,05	Pla
	07-				**CZ098**	Fte	Ø 19,05	Alu
	07-				**PZ077**	Sachs	Ø 15,87	Alu

SEAT

		Spare Parts	F/R	L/R	FRITECH ref.		DIMENSIONS mm.	NOTE
1.2 12v Eng.BXV (51kW)	3/07-6/08		R		**CF121**		Ø 19,05	Alu
	06-				**PF973**	Fte	Ø 20,64	Ch 6L7048490-, Alu, +ABS
	3/07-6/08				**CZ077**	Fte	Ø 19,05	Pla
	3/07-6/08				**CZ099**	Fte	Ø 19,05	
	3/07-6/08				**PZ077**	Sachs	Ø 15,87	Alu
1.4 16v Eng.AUB/ BBZ (74kW)	02-05				**PF993**	Bch	Ø 20,64	Alu, -ABS
	06-				**PF973**	Fte	Ø 20,64	Ch 6L7048490-, Alu, +ABS
	02-05				**PF463**	Fte	Ø 20,64	Alu, +ABS
	02-05				**PF329**	Fte	Ø 20,64	Alu, -ABS, +PS
	02-				**CZ077**	Fte	Ø 19,05	Pla
	02-				**CZ099**	Fte	Ø 19,05	
	02-				**PZ077**	Sachs	Ø 15,87	Alu
1.4 16v Eng.BBY/ BKY (55kW)	10/02-		R		**CF121**		Ø 19,05	Alu
	02-05				**PF993**	Bch	Ø 20,64	Alu, -ABS
	06-				**PF973**	Fte	Ø 20,64	Ch 6L7048490-, Alu, +ABS
	02-05				**PF463**	Fte	Ø 20,64	Alu, +ABS
	02-05				**PF329**	Fte	Ø 20,64	Alu, -ABS, +PS
	02-				**CZ077**	Fte	Ø 19,05	Pla
	02-				**CZ099**	Fte	Ø 19,05	
	02-				**PZ077**	Sachs	Ø 15,87	Alu
1.4 16v Eng.BXW (63kW)	07-		R		**CF121**		Ø 19,05	Alu
	06-				**PF973**	Fte	Ø 20,64	Ch 6L7048490-, Alu, +ABS
	07-				**CZ077**	Fte	Ø 19,05	Pla
	07-				**CZ099**	Fte	Ø 19,05	
	07-				**PZ077**	Sachs	Ø 15,87	Alu
1.4 TDi Eng.AMF (55kW)	02-08		R		**CF121**		Ø 19,05	Alu
	02-05				**PF993**	Bch	Ø 20,64	Alu, -ABS
	06-				**PF973**	Fte	Ø 20,64	Ch 6L7048490-, Alu, +ABS
	02-05				**PF463**	Fte	Ø 20,64	Alu, +ABS
	02-05				**PF329**	Fte	Ø 20,64	Alu, -ABS, +PS
	02-08				**CZ086**	Fte	Ø 19,05	Pla
	02-08				**CZ098**	Fte	Ø 19,05	Alu
	02-08				**PZ077**	Sachs	Ø 15,87	Alu
1.4 TDi Eng.BMS/ BNV (59kW)	05-		R		**CF239**		Ø 17,46	Alu, Cod. ID PR 1KB
	05-		R		**CF121**		Ø 19,05	Alu, Cod. ID PR 1KM
	06-				**PF973**	Fte	Ø 20,64	Ch 6L7048490-, Alu, +ABS
	05-				**CZ077**	Fte	Ø 19,05	Pla
	05-				**CZ099**	Fte	Ø 19,05	
	05-				**PZ077**	Sachs	Ø 15,87	Alu
1.4 TDi Eng.BNM (51kW)	05-08		R		**CF239**		Ø 17,46	Alu, Cod. ID PR 1KB
	05-08		R		**CF121**		Ø 19,05	Alu, Cod. ID PR 1KM
	06-				**PF973**	Fte	Ø 20,64	Ch 6L7048490-, Alu, +ABS
	05-08				**CZ077**	Fte	Ø 19,05	Pla
	05-08				**CZ099**	Fte	Ø 19,05	
	05-08				**PZ077**	Sachs	Ø 15,87	Alu
1.6 Eng.BAH (74kW)	03-		R		**CF121**		Ø 19,05	Alu
	03-05				**PF993**	Bch	Ø 20,64	Alu, -ABS
	06-				**PF973**	Fte	Ø 20,64	Ch 6L7048490-, Alu, +ABS
	03-05				**PF463**	Fte	Ø 20,64	Alu, +ABS
	03-05				**PF329**	Fte	Ø 20,64	Alu, -ABS, +PS
	03-				**CZ077**	Fte	Ø 19,05	Pla
	03-				**CZ099**	Fte	Ø 19,05	
	03-				**PZ077**	Sachs	Ø 15,87	Alu
1.6 16v Eng.BTS (77kW)	06-		R		**CF121**		Ø 19,05	Alu
	06-				**CZ077**	Fte	Ø 19,05	Pla
	06-				**CZ099**	Fte	Ø 19,05	
	06-				**PZ077**	Sachs	Ø 15,87	Alu
1.8 T. Cupra R Eng.BBU/ BLZ (132kW)	06-				**PF973**	Fte	Ø 20,64	Ch 6L7048490-, Alu, +ABS
	04-				**CZ086**	Fte	Ø 19,05	Pla
	04-				**CZ098**	Fte	Ø 19,05	Alu
	04-08				**PZ077**	Sachs	Ø 15,87	Alu
1.8 T. FR Eng.BKV/ BJX (110kW)	03-08		R		**CF121**		Ø 19,05	Alu
	06-				**PF973**	Fte	Ø 20,64	Ch 6L7048490-, Alu, +ABS
	03-08				**CZ086**	Fte	Ø 19,05	Pla

		Spare Parts	F/R	L/R	FRITECH ref.		DIMENSIONS mm.	NOTE
1.8 T. FR Eng.BKV/ BJX (110kW)	03-08				**CZ098**	Fte	Ø 19,05	Alu
	03-08				**PZ077**	Sachs	Ø 15,87	Alu
1.9 SDi Eng.ASY (47kW)	10/02-		R		**CF121**		Ø 19,05	Alu
	02-05				**PF993**	Bch	Ø 20,64	Alu, -ABS
	06-				**PF973**	Fte	Ø 20,64	Ch 6L7048490-, Alu, +ABS
	02-05				**PF463**	Fte	Ø 20,64	Alu, +ABS
	02-05				**PF329**	Fte	Ø 20,64	Alu, -ABS, +PS
	02-				**CZ077**	Fte	Ø 19,05	Pla
	02-				**CZ099**	Fte	Ø 19,05	
	02-				**PZ077**	Sachs	Ø 15,87	Alu
1.9 TDi Eng.ASZ (96kW)	02-		R		**CF121**		Ø 19,05	Alu
	02-05				**PF993**	Bch	Ø 20,64	Alu, -ABS
	06-				**PF973**	Fte	Ø 20,64	Ch 6L7048490-, Alu, +ABS
	02-05				**PF463**	Fte	Ø 20,64	Alu, +ABS
	02-05				**PF329**	Fte	Ø 20,64	Alu, -ABS, +PS
	02-				**PZ077**	Sachs	Ø 15,87	Alu
1.9 TDi Eng.ATD/ AXR/ BMT (74kW)	02-		R		**CF121**		Ø 19,05	Alu
	02-05				**PF993**	Bch	Ø 20,64	Alu, -ABS
	06-				**PF973**	Fte	Ø 20,64	Ch 6L7048490-, Alu, +ABS
	02-05				**PF463**	Fte	Ø 20,64	Alu, +ABS
	02-05				**PF329**	Fte	Ø 20,64	Alu, -ABS, +PS
	02-				**CZ086**	Fte	Ø 19,05	Pla
	02-				**CZ098**	Fte	Ø 19,05	Alu
	02-				**PZ077**	Sachs	Ø 15,87	Alu
1.9 TDi Cupra R Eng.ARL (110kW)	04-05				**PF463**	Fte	Ø 20,64	Alu, +ABS
	04-				**PZ077**	Sachs	Ø 15,87	Alu
1.9 TDi Cupra R Eng.BPX (118kW)	06-				**PF973**	Fte	Ø 20,64	Ch 6L7048490-, Alu, +ABS
	04-05				**PF463**	Fte	Ø 20,64	Alu, +ABS
	04-				**CZ086**	Fte	Ø 19,05	Pla
	04-				**CZ098**	Fte	Ø 19,05	Alu
	04-				**PZ077**	Sachs	Ø 15,87	Alu
2.0 Eng.AZL/ BBX (85kW)	02-		R		**CF121**		Ø 19,05	Alu
	06-				**PF973**	Fte	Ø 20,64	Ch 6L7048490-, Alu, +ABS
	02-				**CZ077**	Fte	Ø 19,05	Pla
	02-				**CZ099**	Fte	Ø 19,05	
	02-				**PZ077**	Sachs	Ø 15,87	Alu
Ibiza V (6J5,1,8), Sportcoupe, ST SW 7/08-								
1.2 Eng.CGPB/ CHFA (44kW)	09-		R		**CF121**		Ø 19,05	Alu
	09-				**CZ086**	Fte	Ø 19,05	Pla
	09-				**CZ098**	Fte	Ø 19,05	Alu
1.2 12v Eng.BXV/ BZG/ CGPA (51kW)	08-		R		**CF121**		Ø 19,05	Alu
	08-				**CZ077**	Fte	Ø 19,05	Pla
	08-				**CZ099**	Fte	Ø 19,05	
1.2 TDi Eng.CFWA (55kW)	10-		R		**CF121**		Ø 19,05	Alu
	10-				**CZ086**	Fte	Ø 19,05	Pla
	10-				**CZ098**	Fte	Ø 19,05	Alu
1.2 TSi Eng.CBZB (77kW)	10-		R		**CF121**		Ø 19,05	Alu
	10-				**CZ086**	Fte	Ø 19,05	Pla
	10-				**CZ098**	Fte	Ø 19,05	Alu
1.4 16v Eng.BXW/ CGGB (63kW)	08-		R		**CF121**		Ø 19,05	Alu
	08-				**CZ077**	Fte	Ø 19,05	Pla
	08-				**CZ099**	Fte	Ø 19,05	
1.4 TDi Eng.BMS/ BNV (59kW)	08-		R		**CF121**		Ø 19,05	Alu
	08-				**CZ077**	Fte	Ø 19,05	Pla
	08-				**CZ099**	Fte	Ø 19,05	
1.4 TSi Eng.CAVE (132kW)	09-		R		**CF121**		Ø 19,05	Alu
1.4 TSi Eng.CAVF/ CNUB/ CTHF/ CTJB (110kW)	09-		R		**CF121**		Ø 19,05	Alu
	09-				**CZ086**	Fte	Ø 19,05	Pla
	09-				**CZ098**	Fte	Ø 19,05	Alu
1.6 16v Eng.BTS (77kW)	08-		R		**CF121**		Ø 19,05	Alu
1.6 LPG Eng.CNKA (60kW)	11-		R		**CF121**		Ø 19,05	Alu
	11-				**CZ086**	Fte	Ø 19,05	Pla
	11-				**CZ098**	Fte	Ø 19,05	Alu

SEAT

		Spare Parts	F/R	L/R	FRITECH ref.		DIMENSIONS mm.	NOTE
1.6 TDi Eng.CAYB (66kW)	09-		R		**CF121**		Ø 19,05	Alu
	09-				**CZ086**	Fte	Ø 19,05	Pla
	09-				**CZ098**	Fte	Ø 19,05	Alu
1.6 TDi Eng.CAYC/ CLNA (77kW)	10-		R		**CF121**		Ø 19,05	Alu
	10-				**CZ086**	Fte	Ø 19,05	Pla
	10-				**CZ098**	Fte	Ø 19,05	Alu
1.9 TDi Eng.BLS (77kW)	08-		R		**CF121**		Ø 19,05	Alu
	08-				**CZ086**	Fte	Ø 19,05	Pla
	08-				**CZ098**	Fte	Ø 19,05	Alu
1.9 TDi Eng.BXJ (66kW)	08-		R		**CF121**		Ø 19,05	Alu
	08-				**CZ086**	Fte	Ø 19,05	Pla
	08-				**CZ098**	Fte	Ø 19,05	Alu
2.0 Eng.CEKA (85kW)	08-		R		**CF121**		Ø 19,05	Alu
2.0 TDi Eng.CFHD (105kW)	10-		R		**CF121**		Ø 19,05	Alu
Leon I (1M1) 11/99-9/05								
1.4 16v Eng.AHW/ AXP/ BCA (55kW)	11/99-00				**PF241**	Ate	Ø 23,81	Alu, +ESP
	11/99-				**PF818**	Bch	Ø 23,81	Alu, -ESP, RHD
	11/99-				**PF234**		Ø 23,81	-ESP
	11/99-				**CZ081**	Fte	Ø 23,81	Alu
	11/99-				**CZ026**		Ø 23,81	Pla
	11/99-				**PZ064**	Sachs	Ø 15,87	Pla
	11/99-				**PZ107**	Sachs	Ø 15,87	
1.4 16v Eng.APE (55kW)	11/99-00				**PF241**	Ate	Ø 23,81	Alu, +ESP
	11/99-				**PF818**	Bch	Ø 23,81	Alu, -ESP, RHD
	11/99-				**PF234**		Ø 23,81	-ESP
	11/99-				**CZ081**	Fte	Ø 23,81	Alu
	11/99-				**CZ026**		Ø 23,81	Pla
	11/99-				**PZ064**	Sachs	Ø 15,87	Pla
	11/99-				**PZ107**	Sachs	Ø 15,87	
1.6 Eng.AEH/ AKL (74kW)	00-05				**PF799**	Ate	Ø 23,81	Alu, +ESP
	11/99-00				**PF241**	Ate	Ø 23,81	Alu, +ESP
	99-05				**PF818**	Bch	Ø 23,81	Alu, -ESP, RHD
	99-05				**PF234**		Ø 23,81	-ESP
	99-05				**CZ081**	Fte	Ø 23,81	Alu
	99-05				**CZ026**		Ø 23,81	Pla
	99-05				**PZ064**	Sachs	Ø 15,87	Pla
	99-05				**PZ107**	Sachs	Ø 15,87	
1.6 16v Eng.AUS/ AZD/ BCB (77kW)	00-				**PF799**	Ate	Ø 23,81	Alu, +ESP
	11/99-00				**PF241**	Ate	Ø 23,81	Alu, +ESP
	11/99-				**PF818**	Bch	Ø 23,81	Alu, -ESP, RHD
	11/99-				**PF234**		Ø 23,81	-ESP
	11/99-				**CZ081**	Fte	Ø 23,81	Alu
	11/99-				**CZ026**		Ø 23,81	Pla
	11/99-				**PZ064**	Sachs	Ø 15,87	Pla
	11/99-				**PZ107**	Sachs	Ø 15,87	
1.8 20v Eng.AGN/ APG (92kW)	00-				**PF799**	Ate	Ø 23,81	Alu, +ESP
	11/99-00				**PF241**	Ate	Ø 23,81	Alu, +ESP
	11/99-				**PF818**	Bch	Ø 23,81	Alu, -ESP, RHD
	11/99-				**PF234**		Ø 23,81	-ESP
	11/99-9/05				**CZ076**		Ø 19,05	
	11/99-				**PZ064**	Sachs	Ø 15,87	Pla
	11/99-				**PZ107**	Sachs	Ø 15,87	
1.8 20v T. Eng.APP/ AUQ (132kW)	00-				**PF799**	Ate	Ø 23,81	Alu, +ESP
	11/99-00				**PF241**	Ate	Ø 23,81	Alu, +ESP
	11/99-				**PF818**	Bch	Ø 23,81	Alu, -ESP, RHD
	11/99-				**PF234**		Ø 23,81	-ESP
	11/99-				**PZ064**	Sachs	Ø 15,87	Pla
	11/99-				**PZ107**	Sachs	Ø 15,87	
1.8 20v T4 Eng.AJQ/ ARY (132kW)	00-				**PF799**	Ate	Ø 23,81	Alu, +ESP
	11/99-00				**PF241**	Ate	Ø 23,81	Alu, +ESP
	11/99-				**PZ064**	Sachs	Ø 15,87	Pla
	11/99-				**PZ107**	Sachs	Ø 15,87	
1.8 T. Cupra R Eng.AMK (154kW)	02-				**PZ064**	Sachs	Ø 15,87	Pla
	02-				**PZ107**	Sachs	Ø 15,87	

		Spare Parts	F/R	L/R	FRITECH ref.		DIMENSIONS mm.	NOTE
1.8 T. Cupra R Eng.BAM (165kW)	03-05				**PZ064**	Sachs	Ø 15,87	Pla
	03-mag				**PZ107**	Sachs	Ø 15,87	
1.9 SDi Eng.AGP/ AQM (50kW)	00-				**PF799**	Ate	Ø 23,81	Alu, +ESP
	11/99-00				**PF241**	Ate	Ø 23,81	Alu, +ESP
	11/99-				**PF818**	Bch	Ø 23,81	Alu, -ESP, RHD
	11/99-				**PF234**		Ø 23,81	-ESP
	11/99-				**CZ081**	Fte	Ø 23,81	Alu
	11/99-				**CZ026**		Ø 23,81	Pla
	11/99-				**PZ064**	Sachs	Ø 15,87	Pla
	11/99-				**PZ107**	Sachs	Ø 15,87	
1.9 TDi Eng.AGR/ ALH (66kW)	00-05				**PF799**	Ate	Ø 23,81	Alu, +ESP
	11/99-00				**PF241**	Ate	Ø 23,81	Alu, +ESP
	11/99-				**PF818**	Bch	Ø 23,81	Alu, -ESP, RHD
	11/99-				**PF234**		Ø 23,81	-ESP
	99-05				**CZ076**		Ø 19,05	
	99-05				**PZ064**	Sachs	Ø 15,87	Pla
	99-05				**PZ107**	Sachs	Ø 15,87	
1.9 TDi Eng.AHF/ ASV (81kW)	00-				**PF799**	Ate	Ø 23,81	Alu, +ESP
	11/99-00				**PF241**	Ate	Ø 23,81	Alu, +ESP
	11/99-				**PF818**	Bch	Ø 23,81	Alu, -ESP, RHD
	11/99-				**PF234**		Ø 23,81	-ESP
	11/99-9/05				**CZ076**		Ø 19,05	
	11/99-				**PZ064**	Sachs	Ø 15,87	Pla
	11/99-				**PZ107**	Sachs	Ø 15,87	
1.9 TDi Eng.ASZ (96kW)	03-				**PF799**	Ate	Ø 23,81	Alu, +ESP
	03-05				**PZ064**	Sachs	Ø 15,87	Pla
	03-mag				**PZ107**	Sachs	Ø 15,87	
1.9 TDi, Syncro Eng.ARL (110kW)	01-				**PF799**	Ate	Ø 23,81	Alu, +ESP
	01-				**PZ064**	Sachs	Ø 15,87	Pla
	01-				**PZ107**	Sachs	Ø 15,87	
2.8 Cupra 4 Eng.AUE/ BDE (150kW)	2/01-				**PZ064**	Sachs	Ø 15,87	Pla
	2/01-				**PZ107**	Sachs	Ø 15,87	
Leon II (1P1) 9/05-12/12								
1.2 TSi Eng.CBZB (77kW)	10-				**PF869**	Ate	Ø 22,20	Alu
1.4 16v Eng.BBY (55kW)	05-				**CZ077**	Fte	Ø 19,05	Pla
	05-				**CZ099**	Fte	Ø 19,05	
1.4 16v Eng.BXW/ CGGB (63kW)	07-				**PF869**	Ate	Ø 22,20	Alu
	07-				**CZ077**	Fte	Ø 19,05	Pla
	07-				**CZ099**	Fte	Ø 19,05	
1.4 TSi Eng.CAXA/ CAXC (92kW)	07-				**PF869**	Ate	Ø 22,20	Alu
	07-				**CZ077**	Fte	Ø 19,05	Pla
	07-				**CZ099**	Fte	Ø 19,05	
	07-6/11				**CZ080**	Sachs	Ø 19,05	Alu
1.6 Eng.BSE/ BSF (75kW)	05-				**PF647**	Ate	Ø 22,20	Ch -5P6031759, Alu
	05-				**PF869**	Ate	Ø 22,20	Ch 5P6031760-, Alu
	05-				**PF646**	Bch	Ø 22,20	Alu
	05-				**CZ077**	Fte	Ø 19,05	Pla
	05-				**CZ099**	Fte	Ø 19,05	
	05-				**CZ080**	Sachs	Ø 19,05	Alu
1.6 16v Eng.AZD (77kW)	05-				**CZ077**	Fte	Ø 19,05	Pla
	05-				**CZ099**	Fte	Ø 19,05	
1.6 LPG Eng.CHGA/ CMXA (75kW)	09-				**PF869**	Ate	Ø 22,20	Alu
	09-				**CZ080**	Sachs	Ø 19,05	Alu
1.6 TDi Eng.CAYB (66kW)	10-				**PF869**	Ate	Ø 22,20	Alu
	10-				**CZ080**	Sachs	Ø 19,05	Alu
1.6 TDi Eng.CAYC (77kW)	10-				**PF869**	Ate	Ø 22,20	Alu
	10-				**CZ080**	Sachs	Ø 19,05	Alu
1.8 16v TFSI Eng.BZB/ CDAA (118kW)	07-				**PF647**	Ate	Ø 22,20	Ch -5P6031759, Alu
	07-				**PF869**	Ate	Ø 22,20	Ch 5P6031760-, Alu
	07-				**CZ080**	Sachs	Ø 19,05	Alu
1.9 TDi Eng.AXR (74kW)	05-				**CZ076**		Ø 19,05	
	05-				**PZ064**	Sachs	Ø 15,87	Pla
	05-				**PZ107**	Sachs	Ø 15,87	

SEAT

		Spare Parts	F/R	L/R	FRITECH ref.		DIMENSIONS mm.	NOTE
1.9 TDi Eng.BKC/ BLS/ BXE (77kW)	05-				**PF647**	Ate	Ø 22,20	Ch -5P6031759, Alu
	05-				**PF869**	Ate	Ø 22,20	Ch 5P6031760-, Alu
	05-				**PF646**	Bch	Ø 22,20	Alu
	05-				**CZ080**	Sachs	Ø 19,05	Alu
1.9 TDi Eng.BXF (66kW)	07-				**CZ080**	Sachs	Ø 19,05	Alu
2.0 FSi Eng.BLR/ BLY/ BVY/ BVZ (110kW)	05-				**PF647**	Ate	Ø 22,20	Ch -5P6031759, Alu
	05-				**PF869**	Ate	Ø 22,20	Ch 5P6031760-, Alu
	05-				**PF646**	Bch	Ø 22,20	Alu
	05-				**CZ080**	Sachs	Ø 19,05	Alu
2.0 TDi Eng.AZV (100kW)	05-				**CZ080**	Sachs	Ø 19,05	Alu
2.0 TDi Eng.BKD/ BMM/ CFHC/ CLCB (103kW)	05-				**PF647**	Ate	Ø 22,20	Ch -5P6031759, Alu
	05-				**PF869**	Ate	Ø 22,20	Ch 5P6031760-, Alu
	05-				**PF646**	Bch	Ø 22,20	Alu
	05-				**CZ080**	Sachs	Ø 19,05	Alu
2.0 TDi DPF Eng.BMN/ CEGA/ CFJA (125kW)	06-				**PF647**	Ate	Ø 22,20	Ch -5P6031759, Alu
	06-				**PF869**	Ate	Ø 22,20	Ch 5P6031760-, Alu
	06-				**CZ080**	Sachs	Ø 19,05	Alu
2.0 TFSI Eng.BWA (136kW)	05-				**PF647**	Ate	Ø 22,20	Ch -5P6031759, Alu
	05-				**PF646**	Bch	Ø 22,20	Alu
	05-				**CZ080**	Sachs	Ø 19,05	Alu
2.0 TFSi Eng.BWA (147kW)	05-				**PF869**	Ate	Ø 22,20	Alu
2.0 TFSi Cupra Eng.BWJ/ CDLD (177kW)	06-				**PF647**	Ate	Ø 22,20	Ch -5P6031759, Alu
	06-				**PF869**	Ate	Ø 22,20	Ch 5P6031760-, Alu
2.0 TSi Eng.CCZB (155kW)	09-				**PF869**	Ate	Ø 22,20	Alu
2.0 TSi Eng.CDLA (195kW)	10-				**PF869**	Ate	Ø 22,20	Alu
Malaga (023A) 11/84-12/93								
1.2 Eng.021A.1000 (44-46kW)	84-86		R		**CF201**		Ø 17,46	
	84-93		R		**CF068**		Ø 17,46	
	86-93				**PF007**	Ate	Ø 20,64	
	84-85				**PF053**		Ø 19,05	
	85-86				**PF089**		Ø 20,64	
	84-86				**CT008**		Ø 19,05	Alu
	86-93				**CT004**		Ø 25,40	Alu
1.2 i Eng.021C.1000 (52kW)	84-86		R		**CF201**		Ø 17,46	
	89-93		R		**CF068**		Ø 17,46	
	89-93				**PF007**	Ate	Ø 20,64	
	89-93				**CT004**		Ø 25,40	Alu
1.5 Eng.021A.2000 (63kW)	84-86		R		**CF201**		Ø 17,46	
	85-93		R		**CF068**		Ø 17,46	
	86-93				**PF007**	Ate	Ø 20,64	
	85-86				**PF089**		Ø 20,64	
	85-86				**CT008**		Ø 19,05	Alu
	86-93				**CT004**		Ø 25,40	Alu
1.5 i Eng.021B.2000 (74kW)	84-86		R		**CF201**		Ø 17,46	
	87-93		R		**CF004**		Ø 19,05	
	87-93				**PF007**	Ate	Ø 20,64	
	87-93				**CT004**		Ø 25,40	Alu
1.5 i Kat Eng.021C.2000 (66kW)	84-86		R		**CF201**		Ø 17,46	
	86-93		R		**CF068**		Ø 17,46	
	86-93				**PF007**	Ate	Ø 20,64	
	86-93				**CT004**		Ø 25,40	Alu
1.7 D Eng.022A.5000 (40-42kW)	84-86		R		**CF201**		Ø 17,46	
	85-93		R		**CF068**		Ø 17,46	
	85-93				**PF007**	Ate	Ø 20,64	
	85-86				**PF089**		Ø 20,64	
	85-86				**CT008**		Ø 19,05	Alu
	86-93				**CT004**		Ø 25,40	Alu
Marbella (28) 8/86-10/98								
0.8 Eng.08NCA/ 100GB (25kW)	86-93		R		**CF004**		Ø 19,05	
	86-88				**PF018**		Ø 19,05	
	86-93				**CT008**		Ø 19,05	Alu
0.9, Kat Eng.08NCB/ 146A (30-32kW)	96-98		R		**CF004**		Ø 19,05	
	96-98				**PF018**		Ø 19,05	
	96-98				**CT008**		Ø 19,05	Alu

		Spare Parts	F/R	L/R	FRITECH ref.		DIMENSIONS mm.	NOTE
0.9, Kat Eng.09NCA/ B (29kW)	87-96		R		**CF004**		Ø 19,05	
	87-88				**PF018**		Ø 19,05	
	87-96				**CT008**		Ø 19,05	Alu
Mii (KF1) 10/11-								
1.0 Eng.CHYA (44kW)	11-		R		**CF239**		Ø 17,46	Alu
1.0 Eng.CHYB (55kW)	11-		R		**CF239**		Ø 17,46	Alu
Panda (141A) 10/80-8/98								
0.75, Kat, Van Eng.156A4.000 (25kW)	86-97		R		**CF002**		Ø 19,05	Spain
	86-97		R		**CF004**		Ø 19,05	
	86-97				**PF053**		Ø 19,05	
	86-97				**PF070**		Ø 19,05	Spain
	86-97				**CT008**		Ø 19,05	Alu
0.75,Kat, Van Eng.141B.000 (25kW)	86-97		R		**CF002**		Ø 19,05	Spain
	86-97		R		**CF004**		Ø 19,05	
	86-97				**PF053**		Ø 19,05	
	86-97				**PF070**		Ø 19,05	Spain
	86-97				**CT008**		Ø 19,05	Alu
0.8 Eng.100GL6.000 (25kW)	81-82		R		**CF351**		Ø 15,72	
	81-85		R		**CF002**		Ø 19,05	Spain
	82-85		R		**CF004**		Ø 19,05	
	81-82				**PF047**		Ø 19,05	
	81-85				**PF070**		Ø 19,05	Spain
	82-85				**PF053**		Ø 19,05	
	81-82				**CT005**		Ø 19,05	Alu, Incl. Spain
	82-85				**CT008**		Ø 19,05	Alu
0.9 Eng.100GL3.000/ 146A.000 (31-33kW)	80-82		R		**CF351**		Ø 15,72	
	80-94		R		**CF002**		Ø 19,05	Spain
	82-94		R		**CF004**		Ø 19,05	
	80-82				**PF047**		Ø 19,05	
	80-94				**PF070**		Ø 19,05	Spain
	82-94				**PF053**		Ø 19,05	
	80-82				**CT005**		Ø 19,05	Alu, Incl. Spain
	82-94				**CT008**		Ø 19,05	Alu
1.0 i.e. Kat, 4WD, Van Eng.141C2.000 (33kW)	87-98		R		**CF002**		Ø 19,05	Spain
	87-98		R		**CF004**		Ø 19,05	
	87-98				**PF053**		Ø 19,05	
	87-98				**PF070**		Ø 19,05	Spain
	87-98				**CT008**		Ø 19,05	Alu
1.0 i.e. Kat, 4WD, Van Eng.156A2.246 (33kW)	87-98		R		**CF002**		Ø 19,05	Spain
	87-98		R		**CF004**		Ø 19,05	
	87-98				**PF053**		Ø 19,05	
	87-98				**PF070**		Ø 19,05	Spain
	87-98				**CT008**		Ø 19,05	Alu
Panda Trans 10/80-12/86								
All models	80-86		R		**CF305**		Ø 22,20	
	80-82				**PF053**		Ø 19,05	
	82-86				**PF018**		Ø 19,05	
	80-86				**CT008**		Ø 19,05	Alu
Ritmo (138) 7/78-9/83								
1.2 Eng.021A.1000 (44-46kW)	78-83		R		**CF347**		Ø 17,46	
	78-83				**PF047**		Ø 19,05	
	78-83				**CT001**	Benditalia	Ø 25,40	Alu
1.4 (57kW)	78-83		R		**CF347**		Ø 17,46	
	78-83		R		**CF004**		Ø 19,05	CLX
	78-83				**PF047**		Ø 19,05	
	78-83				**PF053**		Ø 19,05	CLX
	78-83				**CT001**	Benditalia	Ø 25,40	Alu
	78-83				**CT004**		Ø 25,40	Alu, CLX
1.7 D Eng.022A.5000 (41kW)	79-83		R		**CF347**		Ø 17,46	
	79-83				**PF047**		Ø 19,05	
Ronda (022A) 6/82-11/88								
1.2 Eng.021A.1000 (44-46kW)	84-85		R		**CF201**		Ø 17,46	
	85-86		R		**CF004**		Ø 19,05	
	85-86				**PF007**	Ate	Ø 20,64	

SEAT

		Spare Parts	F/R	L/R	FRITECH ref.		DIMENSIONS mm.	NOTE
1.2 Eng.021A.1000 (44-46kW)	84-85				**PF053**		Ø 19,05	
	84-86				**CT004**		Ø 25,40	Alu
1.2 Eng.124B6.000 (47kW)	83-85		R		**CF201**		Ø 17,46	
	83-85				**PF053**		Ø 19,05	
	83-85				**CT004**		Ø 25,40	Alu
1.4 Eng.124B7.000 (54kW)	84-85		R		**CF201**		Ø 17,46	
	85-88		R		**CF004**		Ø 19,05	
	85-86				**PF007**	Ate	Ø 20,64	
	82-85				**PF053**		Ø 19,05	
	86-88				**PF089**		Ø 20,64	
	82-88				**CT004**		Ø 25,40	Alu
1.5 Eng.021A.2000 (62-63kW)	84-85		R		**CF201**		Ø 17,46	
	85-86		R		**CF004**		Ø 19,05	
	85-86				**PF007**	Ate	Ø 20,64	
	84-85				**PF053**		Ø 19,05	
	86-12/86				**PF089**		Ø 20,64	
	84-86				**CT004**		Ø 25,40	Alu
1.6 Eng.022A000/ 138AR6000 (68kW)	83-85		R		**CF201**		Ø 17,46	
	83-85				**PF053**		Ø 19,05	
	83-85				**CT004**		Ø 25,40	Alu
1.7 D Eng.022A.5000 (40-42kW)	82-85		R		**CF201**		Ø 17,46	
	85-86		R		**CF004**		Ø 19,05	
	85-86				**PF007**	Ate	Ø 20,64	
	82-85				**PF053**		Ø 19,05	
	86-12/86				**PF089**		Ø 20,64	
	82-86				**CT004**		Ø 25,40	Alu
Sport Coupe 1/77-1/80								
1.4 (56kW)	77-80		R		**CF002**		Ø 19,05	
	77-80				**PF013**		Ø 19,05	
Terra (24) 2/87-12/96								
1.3 D Eng.MN (33kW)	90-94		R		**CF305**		Ø 22,20	
	90-94				**PF007**	Ate	Ø 20,64	3p
	90-94				**PF089**		Ø 20,64	5p
	90-94				**CT008**		Ø 19,05	Alu
1.4 D Eng.1W (35kW)	90-95		R		**CF305**		Ø 22,20	
	90-95				**PF007**	Ate	Ø 20,64	3p
	90-95				**PF089**		Ø 20,64	5p
	90-95				**CT008**		Ø 19,05	Alu
Toledo I (1L) 5/91-3/99								
1.6 i Eng.AFT (74kW)	96-99		R		**CF000**		Ø 17,46	
	96-99		R		**CF239**		Ø 17,46	Alu
					PF041	Ate	Ø 20,64	Ch 1LZD101451-1LZD315000, -ABS
	96-				**PF007**	Ate	Ø 20,64	Ch -1LZD101450
					PF231	Ate	Ø 20,64	Ch 1LZD101451-1LZD315000, Alu
	-99				**PF039**	Luc	Ø 22,20	Ch 1LZD315001-, -ABS
	-99				**PF248**	Luc	Ø 22,20	Ch 1LZD315001-, Alu, -ABS
1.6 i Eng.EZ/ ABN (54kW)	91-99		R		**CF000**		Ø 17,46	
	91-99		R		**CF239**		Ø 17,46	Alu
					PF041	Ate	Ø 20,64	Ch 1LZD101451-1LZD315000, -ABS
	9/91-				**PF007**	Ate	Ø 20,64	Ch -1LZD101450
					PF231	Ate	Ø 20,64	Ch 1LZD101451-1LZD315000, Alu
	-99				**PF039**	Luc	Ø 22,20	Ch 1LZD315001-, -ABS
	-99				**PF248**	Luc	Ø 22,20	Ch 1LZD315001-, Alu, -ABS
1.6i Eng.1F (52-54-55kW)	91-99		R		**CF000**		Ø 17,46	
	91-99		R		**CF239**		Ø 17,46	Alu
					PF041	Ate	Ø 20,64	Ch 1LZD101451-1LZD315000, -ABS
	9/91-				**PF007**	Ate	Ø 20,64	Ch -1LZD101450
					PF231	Ate	Ø 20,64	Ch 1LZD101451-1LZD315000, Alu
	-9/98				**PF039**	Luc	Ø 22,20	Ch 1LZD315001-, -ABS
	-9/98				**PF248**	Luc	Ø 22,20	Ch 1LZD315001-, Alu, -ABS
1.8 16v Eng.KR (98kW)	91-99				**PF609**	Ate	Ø 23,81	
	91-99				**CZ025**	Ate	Ø 23,81	Alu
	91-99				**CZ093**	Ate	Ø 23,81	

		Spare Parts	F/R	L/R	FRITECH ref.		DIMENSIONS mm.	NOTE
1.8 16v Eng.PL (92kW)	91-99				**PF609**	Ate	Ø 23,81	
	91-99				**CZ025**	Ate	Ø 23,81	Alu
	91-99				**CZ093**	Ate	Ø 23,81	
1.8 i Eng.ABS/ ADZ (66kW)	93-96		R		**CF000**		Ø 17,46	
	93-96		R		**CF239**		Ø 17,46	Alu
	93-				**PF041**	Ate	Ø 20,64	Ch -1LZD315000, -ABS
	93-				**PF231**	Ate	Ø 20,64	Ch -1LZD315000, Alu
	-96				**PF039**	Luc	Ø 22,20	Ch 1LZD315001-, -ABS
	-96				**PF248**	Luc	Ø 22,20	Ch 1LZD315001-, Alu, -ABS
1.8 i Eng.RP (65kW)	91-96		R		**CF000**		Ø 17,46	
	91-96		R		**CF239**		Ø 17,46	Alu
	9/91-				**PF041**	Ate	Ø 20,64	Ch -1LZD315000, -ABS
	9/91-				**PF231**	Ate	Ø 20,64	Ch -1LZD315000, Alu
	-96				**PF039**	Luc	Ø 22,20	Ch 1LZD315001-, -ABS
	-96				**PF248**	Luc	Ø 22,20	Ch 1LZD315001-, Alu, -ABS
1.9 D Eng.1Y (47-50kW)	91-99		R		**CF000**		Ø 17,46	
	91-99		R		**CF239**		Ø 17,46	Alu
	9/91-				**PF041**	Ate	Ø 20,64	Ch -1LZD315000, -ABS
	9/91-				**PF231**	Ate	Ø 20,64	Ch -1LZD315000, Alu
	-99				**PF039**	Luc	Ø 22,20	Ch 1LZD315001-, -ABS
	-99				**PF248**	Luc	Ø 22,20	Ch 1LZD315001-, Alu, -ABS
1.9 SDi Eng.AEF/ AEY (47kW)	95-99		R		**CF000**		Ø 17,46	
	95-99		R		**CF239**		Ø 17,46	Alu
	95-99				**PF041**	Ate	Ø 20,64	Ch -1LZD315000, -ABS
	95-99				**PF231**	Ate	Ø 20,64	Ch -1LZD315000, Alu
	-99				**PF039**	Luc	Ø 22,20	Ch 1LZD315001-, -ABS
	-99				**PF248**	Luc	Ø 22,20	Ch 1LZD315001-, Alu, -ABS
1.9 TD Eng.AAZ (50-55kW)	91-99		R		**CF000**		Ø 17,46	
	91-99		R		**CF239**		Ø 17,46	Alu
	9/91-				**PF041**	Ate	Ø 20,64	Ch -1LZD315000, -ABS
	9/91-				**PF231**	Ate	Ø 20,64	Ch -1LZD315000, Alu
	-99				**PF039**	Luc	Ø 22,20	Ch 1LZD315001-, -ABS
	-99				**PF248**	Luc	Ø 22,20	Ch 1LZD315001-, Alu, -ABS
1.9 TDi Eng.1Z/ AHU/ ANU (66kW)	-99		R		**CF000**		Ø 17,46	Ch 1LZD315001-
	-99		R		**CF239**		Ø 17,46	Ch 1LZD315001-, Alu
	95-99				**PF609**	Ate	Ø 23,81	+ABS
	-99				**PF039**	Luc	Ø 22,20	Ch 1LZD315001-, -ABS
	-99				**PF248**	Luc	Ø 22,20	Ch 1LZD315001-, Alu, -ABS
	95-98				**PZ062**	Ate	Ø 19,05	
1.9 TDi Eng.AFN (81kW)	-99		R		**CF000**		Ø 17,46	Ch 1LZD315001-
	-99		R		**CF239**		Ø 17,46	Ch 1LZD315001-, Alu
	-99				**PF039**	Luc	Ø 22,20	Ch 1LZD315001-, -ABS
	-99				**PF248**	Luc	Ø 22,20	Ch 1LZD315001-, Alu, -ABS
	96-99				**PZ062**	Ate	Ø 19,05	
2.0 i Eng.2E/ AGG (85kW)	91-99				**PF609**	Ate	Ø 23,81	
	91-99				**CZ025**	Ate	Ø 23,81	Alu
	91-99				**CZ093**	Ate	Ø 23,81	
2.0 i 16v Eng.ABF (110kW)	93-99				**PF609**	Ate	Ø 23,81	
	93-99				**CZ025**	Ate	Ø 23,81	Alu
	93-99				**CZ093**	Ate	Ø 23,81	
	93-98				**PZ062**	Ate	Ø 19,05	
Toledo II (1M2) 4/99-9/04								
1.4 16v Eng.AHW/ AXP (55kW)	00-04				**PF799**	Ate	Ø 23,81	Alu, +ESP
	99-00				**PF241**	Ate	Ø 23,81	Alu, +ESP
	99-04				**PF818**	Bch	Ø 23,81	Alu, -ESP, RHD
	99-04				**PF234**		Ø 23,81	-ESP
	99-04				**CZ081**	Fte	Ø 23,81	Alu
	99-04				**CZ026**		Ø 23,81	Pla
	99-				**PZ064**	Sachs	Ø 15,87	Pla
	99-				**PZ107**	Sachs	Ø 15,87	
1.6 Eng.AEH/ AKL (74kW)	00-				**PF799**	Ate	Ø 23,81	Alu, +ESP
	99-00				**PF241**	Ate	Ø 23,81	Alu, +ESP
	99-00				**PF818**	Bch	Ø 23,81	Alu, -ESP, RHD
	99-00				**PF234**		Ø 23,81	-ESP

SEAT

		Spare Parts	F/R	L/R	FRITECH ref.		DIMENSIONS mm.	NOTE
1.6 Eng.AEH/ AKL (74kW)	99-00				**CZ081**	Fte	Ø 23,81	Alu
	99-00				**CZ026**		Ø 23,81	Pla
	99-				**PZ064**	Sachs	Ø 15,87	Pla
	99-				**PZ107**	Sachs	Ø 15,87	
1.6 16v Eng.AUS/ AZD/ BCB (77kW)	00-04				**PF799**	Ate	Ø 23,81	Alu, +ESP
	00-04				**PF818**	Bch	Ø 23,81	Alu, -ESP, RHD
	00-04				**PF234**		Ø 23,81	-ESP
	00-04				**CZ081**	Fte	Ø 23,81	Alu
	00-04				**CZ026**		Ø 23,81	Pla
	00-04				**PZ064**	Sachs	Ø 15,87	Pla
	00-04				**PZ107**	Sachs	Ø 15,87	
1.8 20v Eng.AGN/ APG (92kW)	00-04				**PF799**	Ate	Ø 23,81	Alu, +ESP
	99-00				**PF241**	Ate	Ø 23,81	Alu, +ESP
	99-04				**PF818**	Bch	Ø 23,81	Alu, -ESP, RHD
	99-04				**PF234**		Ø 23,81	-ESP
	4/99-9/04				**CZ076**		Ø 19,05	
	99-				**PZ064**	Sachs	Ø 15,87	Pla
	99-				**PZ107**	Sachs	Ø 15,87	
1.8 20v T. Eng.ARY/ AUQ (132kW)	01-04				**PF799**	Ate	Ø 23,81	Alu, +ESP
	01-04				**PF818**	Bch	Ø 23,81	Alu, -ESP, RHD
	01-04				**PF234**		Ø 23,81	-ESP
	01-04				**PZ064**	Sachs	Ø 15,87	Pla
	01-04				**PZ107**	Sachs	Ø 15,87	
1.9 SDi Eng.AQM (50kW)	99-04				**CZ081**	Fte	Ø 23,81	Alu
	99-04				**CZ026**		Ø 23,81	Pla
	99-04				**PZ064**	Sachs	Ø 15,87	Pla
	99-04				**PZ107**	Sachs	Ø 15,87	
1.9 TDi Eng.AGR/ ALH (66kW)	00-04				**PF799**	Ate	Ø 23,81	Alu, +ESP
	99-00				**PF241**	Ate	Ø 23,81	Alu, +ESP
	99-04				**PF818**	Bch	Ø 23,81	Alu, -ESP, RHD
	99-04				**PF234**		Ø 23,81	-ESP
	99-04				**CZ076**		Ø 19,05	
	99-04				**PZ064**	Sachs	Ø 15,87	Pla
	99-04				**PZ107**	Sachs	Ø 15,87	
1.9 TDi Eng.AHF/ ASV (81kW)	00-04				**PF799**	Ate	Ø 23,81	Alu, +ESP
	99-00				**PF241**	Ate	Ø 23,81	Alu, +ESP
	99-04				**PF818**	Bch	Ø 23,81	Alu, -ESP, RHD
	99-04				**PF234**		Ø 23,81	-ESP
	99-04				**CZ076**		Ø 19,05	
	99-04				**PZ064**	Sachs	Ø 15,87	Pla
	99-04				**PZ107**	Sachs	Ø 15,87	
1.9 TDi Eng.ARL (110kW)	00-04				**PF799**	Ate	Ø 23,81	Alu, +ESP
	00-04				**PF818**	Bch	Ø 23,81	Alu, -ESP, RHD
	00-04				**PF234**		Ø 23,81	-ESP
	00-04				**PZ064**	Sachs	Ø 15,87	Pla
	00-04				**PZ107**	Sachs	Ø 15,87	
1.9 TDi Eng.ASZ (96kW)	03-				**PF799**	Ate	Ø 23,81	Alu, +ESP
	03-				**PF818**	Bch	Ø 23,81	Alu, -ESP, RHD
	03-				**PF234**		Ø 23,81	-ESP
	03-				**PZ064**	Sachs	Ø 15,87	Pla
	03-				**PZ107**	Sachs	Ø 15,87	
2.3 V5 Eng.AGZ (110kW)	00-01				**PF799**	Ate	Ø 23,81	Alu, +ESP
	99-00				**PF241**	Ate	Ø 23,81	Alu, +ESP
	99-01				**PF818**	Bch	Ø 23,81	Alu, -ESP, RHD
	99-01				**PF234**		Ø 23,81	-ESP
	4/99-5/01				**CZ076**		Ø 19,05	
	99-				**PZ064**	Sachs	Ø 15,87	Pla
	99-				**PZ107**	Sachs	Ø 15,87	
2.3 V5 20v Eng.AQN (125kW)	01-04				**PF799**	Ate	Ø 23,81	Alu, +ESP
	01-04				**PF818**	Bch	Ø 23,81	Alu, -ESP, RHD
	01-04				**PF234**		Ø 23,81	-ESP
	5/01-9/04				**CZ076**		Ø 19,05	
	01-04				**PZ064**	Sachs	Ø 15,87	Pla
	01-04				**PZ107**	Sachs	Ø 15,87	

		Spare Parts	F/R	L/R	FRITECH ref.		DIMENSIONS mm.	NOTE
Toledo III (5P2) 10/04-12/09								
1.6 Eng.BGU/ BSF/ BSE/ CCSA (75kW)	04-				**PF647**	Ate	Ø 22,20	Ch -5P6031759, Alu
	04-				**PF869**	Ate	Ø 22,20	Ch 5P6031760-, Alu
	04-				**PF646**	Bch	Ø 22,20	Alu
	04-				**CZ077**	Fte	Ø 19,05	Pla
	04-				**CZ099**	Fte	Ø 19,05	
1.9 TDi Eng.BKC/ BJB/ BLS/ BXE (77kW)	04-				**PF647**	Ate	Ø 22,20	Ch -5P6031759, Alu
	04-				**PF869**	Ate	Ø 22,20	Ch 5P6031760-, Alu
	04-				**PF646**	Bch	Ø 22,20	Alu
	04-3/09				**CZ080**	Sachs	Ø 19,05	Alu
2.0 FSI Eng.BLR/ BLY/ BVY/ BVZ (110kW)	04-				**PF647**	Ate	Ø 22,20	Ch -5P6031759, Alu
	04-				**PF869**	Ate	Ø 22,20	Ch 5P6031760-, Alu
	04-				**PF646**	Bch	Ø 22,20	Alu
	04-3/09				**CZ080**	Sachs	Ø 19,05	Alu
2.0 TDi Eng.BKD/ BMM (103kW)	04-				**PF647**	Ate	Ø 22,20	Ch -5P6031759, Alu
	04-				**PF869**	Ate	Ø 22,20	Ch 5P6031760-, Alu
	04-				**PF646**	Bch	Ø 22,20	Alu
Toledo IV (KG3) 2/13-								
1.2 Eng.CGPC (55kW)	13-		R		**CF1012**		Ø 19,05	Alu
1.2 TSi Eng.CBZA (63kW)	13-		R		**CF1012**		Ø 19,05	Alu
1.2 TSi Eng.CBZB (77kW)	13-		R		**CF1012**		Ø 19,05	Alu
1.4 TSi Eng.CAXA (90kW)	13-		R		**CF1012**		Ø 19,05	Alu
1.6 Eng.CFNA (77kW)	13-		R		**CF1012**		Ø 19,05	Alu
1.6 TDi Eng.CAYB (66kW)	13-		R		**CF1012**		Ø 19,05	Alu
1.6 TDI Eng.CAYC/ CLNA (77kW)	13-		R		**CF1012**		Ø 19,05	Alu
	13-				**CZ086**	Fte	Ø 19,05	Pla
	13-				**CZ098**	Fte	Ø 19,05	Alu

SEAT LCV

Inca (6K9) 11/95-12/03								
1.4 Eng.AEX/ AKV/ APQ (44kW)	95-		R		**CF127**		Ø 20,64	Alu
	-03				**PF583**	Bch	Ø 22,20	Ch 9KX006001-, Alu, -ABS, RHD
	95-				**PF039**	Luc	Ø 22,20	-ABS
	95-				**PF248**	Luc	Ø 22,20	Alu, -ABS
1.4 Eng.AKK/ AUD (44kW)	95-		R		**CF127**		Ø 20,64	Alu
	-03				**PF583**	Bch	Ø 22,20	Ch 9KX006001-, Alu, -ABS, RHD
	95-				**PF039**	Luc	Ø 22,20	-ABS
	95-				**PF248**	Luc	Ø 22,20	Alu, -ABS
1.4 Eng.ANW (44kW)	95-		R		**CF127**		Ø 20,64	Alu
	-03				**PF583**	Bch	Ø 22,20	Ch 9KX006001-, Alu, -ABS, RHD
	95-				**PF039**	Luc	Ø 22,20	-ABS
	95-				**PF248**	Luc	Ø 22,20	Alu, -ABS
1.4 16v Eng.AUA (55kW)	00-		R		**CF127**		Ø 20,64	Alu
	-03				**PF583**	Bch	Ø 22,20	Ch 9KX006001-, Alu, -ABS, RHD
1.6 i Eng.AEE (55kW)	95-		R		**CF127**		Ø 20,64	Alu
	95-				**PF039**	Luc	Ø 22,20	-ABS
	95-				**PF248**	Luc	Ø 22,20	Alu, -ABS
1.6i Eng.1F (52-54-55kW)	95-		R		**CF127**		Ø 20,64	Alu
	95-				**PF039**	Luc	Ø 22,20	-ABS
	95-				**PF248**	Luc	Ø 22,20	Alu, -ABS
1.7 D Eng.AHB (42kW)	96-		R		**CF127**		Ø 20,64	Alu
	96-				**PF039**	Luc	Ø 22,20	-ABS
	96-				**PF248**	Luc	Ø 22,20	Alu, -ABS
1.9 D Eng.1Y (47kW)	95-		R		**CF127**		Ø 20,64	Alu
	-03				**PF583**	Bch	Ø 22,20	Ch 9KX006001-, Alu, -ABS, RHD
	95-				**PF039**	Luc	Ø 22,20	-ABS
	95-				**PF248**	Luc	Ø 22,20	Alu, -ABS
	95-				**CZ081**	Fte	Ø 23,81	Alu
	95-				**CZ026**		Ø 23,81	Pla
1.9 SDi Eng.AEY/ AYQ (47kW)	95-		R		**CF127**		Ø 20,64	Alu
	-03				**PF583**	Bch	Ø 22,20	Ch 9KX006001-, Alu, -ABS, RHD
	95-				**PF039**	Luc	Ø 22,20	-ABS
	95-				**PF248**	Luc	Ø 22,20	Alu, -ABS
	95-				**CZ081**	Fte	Ø 23,81	Alu

SEAT LCV

		Spare Parts	F/R	L/R	FRITECH ref.		DIMENSIONS mm.	NOTE
1.9 SDi Eng.AEY/ AYQ (47kW)	95-				**CZ026**		Ø 23,81	Pla
	95-				**PZ099**	Sachs	Ø 15,87	
1.9 TDi Eng.1Z/ AHU/ ALH/ ANU (66kW)	96-		R		**CF127**		Ø 20,64	Alu
	96-				**PF039**	Luc	Ø 22,20	-ABS
	96-				**PF248**	Luc	Ø 22,20	Alu, -ABS
Marbella (028A) Van 1/87-12/93								
0.9 Eng.09NCA/ B (29kW)	90-93		R		**CF004**		Ø 19,05	
	87-90		R		**CF305**		Ø 22,20	
	87-88				**PF018**		Ø 19,05	
	87-93				**CT008**		Ø 19,05	Alu
Terra (024A) Van 1/87-12/95								
0.9, Kat Eng.09NCA/ B (29kW)	90-95		R		**CF004**		Ø 19,05	
	87-95		R		**CF305**		Ø 22,20	
	87-88				**PF018**		Ø 19,05	-Servo
	87-95				**PF005**		Ø 20,64	+Servo
1.3 D Eng.MN (33kW)	90-92		R		**CF004**		Ø 19,05	
	87-90		R		**CF305**		Ø 22,20	
	90-92				**PF005**		Ø 20,64	+Servo
1.4 D Eng.1W (35kW)	90-92		R		**CF004**		Ø 19,05	
	90-92				**PF005**		Ø 20,64	+Servo

SKODA

100 1/70-12/77								
1.0 Eng.OHV (29-31kW)	70-77		R		**CF240**	Luc	Ø 19,05	
105 (742,744) 8/76-12/90								
1.0 Eng.742/ 10 (32-33kW)	76-90		R		**CF268**		Ø 19,05	
	83-90				**PF359**		Ø 19,05	+Servo
1.05 Eng.742/ 10 (34kW)	83-90				**PF359**		Ø 19,05	+Servo
110 12/69-3/82								
1.1 L, Coupe Eng.OHV (33-35-38kW)	69-82		R		**CF240**	Luc	Ø 19,05	
	69-82		R		**CF268**		Ø 19,05	Coupé
120 (742,744) 8/76-12/90								
1.2 Eng.742/ 12 (35kW)	87-90		R		**CF268**		Ø 19,05	
	87-90				**PF359**		Ø 19,05	+Servo
1.2 Eng.742/ 12 (38kW)	76-90		R		**CF268**		Ø 19,05	
	83-90				**PF359**		Ø 19,05	+Servo
1.2 Eng.742/ 12X (43kW)	76-90		R		**CF268**		Ø 19,05	
	83-90				**PF359**		Ø 19,05	+Servo
130 2/85-10/91								
1.3 Eng.135-8 (43kW)	88-89		R		**CF240**	Luc	Ø 19,05	
1.3 Eng.742/ 13 (45kW)	86-89		R		**CF240**	Luc	Ø 19,05	
	85-86		R		**CF244**	Luc	Ø 22,20	
1.3 G,GL Eng.781136 (46kW)	88-91		R		**CF240**	Luc	Ø 19,05	
1.3 GL (39kW)	87-91		R		**CF240**	Luc	Ø 19,05	
	87-91				**PF359**		Ø 19,05	
Citigo 10/11-								
1.0 Eng.CHYA (44kW)	11-		R		**CF239**		Ø 17,46	Alu
1.0 Eng.CHYB (55kW)	11-		R		**CF239**		Ø 17,46	Alu
1.0 Metano Eng.CPGA (50kW)	13-		R		**CF239**		Ø 17,46	Alu
Fabia I (6Y2, 3, 5), SW 12/99-5/07								
1.0 (Exc. SW) Eng.AQV/ ARV/ ATY (37kW)	99-02		R		**CF121**		Ø 19,05	Alu
	00-02				**PF993**	Bch	Ø 20,64	Alu, -ABS
	99-02				**PF661**	Fte	Ø 19,05	Alu, +ABS, -PS
	00-02				**PF329**	Fte	Ø 20,64	Alu, -ABS, +PS
	99-02				**PF330**		Ø 20,64	Alu, +ABS, +PS
	99-02				**CZ117**	Sachs	Ø 19,05	Alu, Cod ID PR 0EK
	99-02				**PZ077**	Sachs	Ø 15,87	Alu
1.2 Eng.AWY/ BMD (40kW)	02-		R		**CF121**		Ø 19,05	Alu
	02-				**PF993**	Bch	Ø 20,64	Alu, -ABS
	02-				**PF661**	Fte	Ø 19,05	Alu, +ABS, -PS
	02-07				**PF973**	Fte	Ø 20,64	Alu, +ABS, +PS
	02-				**PF329**	Fte	Ø 20,64	Alu, -ABS, +PS
	02-				**CZ077**	Fte	Ø 19,05	Pla
	02-				**CZ099**	Fte	Ø 19,05	

		Spare Parts	F/R	L/R	FRITECH ref.		DIMENSIONS mm.	NOTE
1.2 Eng.AWY/ BMD (40kW)	02-07				**CZ117**	Sachs	Ø 19,05	Alu
	02-				**PZ077**	Sachs	Ø 15,87	Alu
1.2 Eng.AZQ/ BME (47kW)	03-		R		**CF121**		Ø 19,05	Alu
	03-				**PF993**	Bch	Ø 20,64	Alu, -ABS
	03-				**PF661**	Fte	Ø 19,05	Alu, +ABS, -PS
	02-07				**PF973**	Fte	Ø 20,64	Alu, +ABS, +PS
	03-				**PF329**	Fte	Ø 20,64	Alu, -ABS, +PS
	03-				**CZ077**	Fte	Ø 19,05	Pla
	03-				**CZ099**	Fte	Ø 19,05	
	03-07				**CZ117**	Sachs	Ø 19,05	Alu
	03-				**PZ077**	Sachs	Ø 15,87	Alu
1.4 Eng.AME/ AQW/ ATZ (50kW)	00-		R		**CF121**		Ø 19,05	Alu
	00-				**PF993**	Bch	Ø 20,64	Alu, -ABS
	00-				**PF661**	Fte	Ø 19,05	Alu, +ABS, -PS
	00-07				**PF973**	Fte	Ø 20,64	Alu, +ABS
	00-				**PF329**	Fte	Ø 20,64	Alu, -ABS, +PS
	00-				**PF330**		Ø 20,64	Alu, +ABS, +PS
	00-07				**CZ117**	Sachs	Ø 19,05	Alu
	00-				**PZ077**	Sachs	Ø 15,87	Alu
1.4 Eng.AZE/ AZF (44kW)	00-		R		**CF121**		Ø 19,05	Alu
	00-				**PF993**	Bch	Ø 20,64	Alu, -ABS
	00-				**PF661**	Fte	Ø 19,05	Alu, +ABS, -PS
	02-07				**PF973**	Fte	Ø 20,64	Alu, +ABS, +PS
	00-				**PF329**	Fte	Ø 20,64	Alu, -ABS, +PS
	00-				**PF330**		Ø 20,64	Alu, +ABS, +PS
	00-07				**CZ117**	Sachs	Ø 19,05	Alu
	00-				**PZ077**	Sachs	Ø 15,87	Alu
1.4 16v Eng.AUA/ BBY/ BKY (55kW)	99-		R		**CF121**		Ø 19,05	Alu
	99-				**PF993**	Bch	Ø 20,64	Alu, -ABS
	99-				**PF661**	Fte	Ø 19,05	Alu, +ABS, -PS
	00-07				**PF973**	Fte	Ø 20,64	Alu, +ABS
	99-				**PF463**	Fte	Ø 20,64	Alu, +ABS, -PS
	99-				**PF329**	Fte	Ø 20,64	Alu, -ABS, +PS
	99-				**PF330**		Ø 20,64	Alu, +ABS, +PS
	99-				**CZ077**	Fte	Ø 19,05	Pla
	99-				**CZ099**	Fte	Ø 19,05	
	99-07				**CZ117**	Sachs	Ø 19,05	Alu
	99-				**PZ077**	Sachs	Ø 15,87	Alu
1.4 16v Eng.AUB/ BBZ (74kW)	99-		R		**CF121**		Ø 19,05	Alu
	99-				**PF993**	Bch	Ø 20,64	Alu, -ABS
	99-				**PF661**	Fte	Ø 19,05	Alu, +ABS, -PS
	00-07				**PF973**	Fte	Ø 20,64	Alu, +ABS
	99-				**PF463**	Fte	Ø 20,64	Alu, +ABS, -PS
	99-				**PF329**	Fte	Ø 20,64	Alu, -ABS, +PS
	99-				**PF330**		Ø 20,64	Alu, +ABS, +PS
	99-				**CZ077**	Fte	Ø 19,05	Pla
	99-				**CZ099**	Fte	Ø 19,05	
	99-				**PZ077**	Sachs	Ø 15,87	Alu
1.4 16v Eng.BUD (59kW)	06-07				**CZ077**	Fte	Ø 19,05	Pla
	06-07				**CZ099**	Fte	Ø 19,05	
	06-07				**PZ077**	Sachs	Ø 15,87	Alu
1.4 TDi Eng.AMF (55kW)	03-07		R		**CF121**		Ø 19,05	Alu
	03-07				**PF993**	Bch	Ø 20,64	Alu, -ABS
	03-07				**PF661**	Fte	Ø 19,05	Alu, +ABS, -PS
	00-07				**PF973**	Fte	Ø 20,64	Alu, +ABS
	03-07				**PF329**	Fte	Ø 20,64	Alu, -ABS, +PS
	03-07				**CZ086**	Fte	Ø 19,05	Pla
	03-07				**CZ098**	Fte	Ø 19,05	Alu
	03-07				**CZ117**	Sachs	Ø 19,05	Alu
	03-07				**PZ077**	Sachs	Ø 15,87	Alu
1.4 TDi Eng.BNM (51kW)	05-		R		**CF121**		Ø 19,05	Alu
	05-				**PF993**	Bch	Ø 20,64	Alu, -ABS
	05-				**PF661**	Fte	Ø 19,05	Alu, +ABS, -PS
	02-07				**PF973**	Fte	Ø 20,64	Alu, +ABS, +PS

SKODA

		Spare Parts	F/R	L/R	FRITECH ref.		DIMENSIONS mm.	NOTE
1.4 TDi Eng.BNM (51kW)	05-				**PF463**	Fte	Ø 20,64	Alu, +ABS, -PS
	05-				**PF329**	Fte	Ø 20,64	Alu, -ABS, +PS
	05-				**CZ077**	Fte	Ø 19,05	Pla
	05-				**CZ099**	Fte	Ø 19,05	
	05-07				**CZ117**	Sachs	Ø 19,05	Alu
	05-07				**PZ077**	Sachs	Ø 15,87	Alu
1.4 TDi Eng.BNV (59kW)	05-		R		**CF121**		Ø 19,05	Alu
	05-				**PF993**	Bch	Ø 20,64	Alu, -ABS
	05-				**PF661**	Fte	Ø 19,05	Alu, +ABS, -PS
	00-07				**PF973**	Fte	Ø 20,64	Alu, +ABS
	05-				**PF463**	Fte	Ø 20,64	Alu, +ABS, -PS
	05-				**PF329**	Fte	Ø 20,64	Alu, -ABS, +PS
	05-07				**CZ086**	Fte	Ø 19,05	Pla
	05-07				**CZ098**	Fte	Ø 19,05	Alu
	05-07				**CZ117**	Sachs	Ø 19,05	Alu
	05-07				**PZ077**	Sachs	Ø 15,87	Alu
1.9 SDi Eng.ASY (47kW)	99-		R		**CF121**		Ø 19,05	Alu
	99-				**PF993**	Bch	Ø 20,64	Alu, -ABS
	99-				**PF661**	Fte	Ø 19,05	Alu, +ABS, -PS
	00-07				**PF973**	Fte	Ø 20,64	Alu, +ABS
	99-				**PF463**	Fte	Ø 20,64	Alu, +ABS, -PS
	99-				**PF329**	Fte	Ø 20,64	Alu, -ABS, +PS
	99-				**PF330**		Ø 20,64	Alu, +ABS, +PS
	99-				**CZ077**	Fte	Ø 19,05	Pla
	99-				**CZ099**	Fte	Ø 19,05	
	99-07				**CZ117**	Sachs	Ø 19,05	Alu
	99-				**PZ077**	Sachs	Ø 15,87	Alu
1.9 TDi Eng.ATD/ AXR (74kW)	00-		R		**CF121**		Ø 19,05	Alu
	00-				**PF993**	Bch	Ø 20,64	Alu, -ABS
	00-				**PF661**	Fte	Ø 19,05	Alu, +ABS, -PS
	00-				**PF463**	Fte	Ø 20,64	Alu, +ABS, -PS
	00-07				**PF973**	Fte	Ø 20,64	Alu, +ABS
	00-				**PF329**	Fte	Ø 20,64	Alu, -ABS, +PS
	00-				**CZ086**	Fte	Ø 19,05	Pla
	00-				**CZ098**	Fte	Ø 19,05	Alu
	00-				**PZ077**	Sachs	Ø 15,87	Alu
1.9 TDi (Exc. SW) Eng.ASZ (96kW)	03-07				**PF993**	Bch	Ø 20,64	Alu, -ABS
	03-07				**PF661**	Fte	Ø 19,05	Alu, +ABS, -PS
	00-07				**PF973**	Fte	Ø 20,64	Alu, +ABS
	03-07				**PF463**	Fte	Ø 20,64	Alu, +ABS, -PS
	03-07				**PF329**	Fte	Ø 20,64	Alu, -ABS, +PS
	03-07				**PZ077**	Sachs	Ø 15,87	Alu
2.0 Eng.AQY/ AZL/ AZH (85kW)	00-07				**PF973**	Fte	Ø 20,64	Alu, +ABS
	99-				**CZ077**	Fte	Ø 19,05	Pla, Eng. AZL
	99-				**CZ099**	Fte	Ø 19,05	Eng. AZL
	99-				**PZ077**	Sachs	Ø 15,87	Alu
Fabia II (5J2), SW 5/07-12/14								
1.2 Eng.BBM/ CHFA (44kW)	07-		R		**CF121**		Ø 19,05	Alu
	07-				**PF993**	Bch	Ø 20,64	Alu, -ABS
	-03/10				**PF973**	Fte	Ø 20,64	Alu, +ABS, +PS
	07-				**PF463**	Fte	Ø 20,64	Alu, +ABS
	07-				**PF329**	Fte	Ø 20,64	Alu, -ABS, +PS
	07-				**CZ077**	Fte	Ø 19,05	Pla
	07-				**CZ099**	Fte	Ø 19,05	
	07-				**PZ077**	Sachs	Ø 15,87	Alu
1.2 12v Eng.BZG/ CEVA/ CGPA/ CHTA (51kW)	07-		R		**CF121**		Ø 19,05	Alu
	-03/10				**PF973**	Fte	Ø 20,64	Alu, +ABS, +PS
	07-				**PF463**	Fte	Ø 20,64	Alu, +ABS
	07-				**CZ077**	Fte	Ø 19,05	Pla
	07-				**CZ099**	Fte	Ø 19,05	
	07-				**PZ077**	Sachs	Ø 15,87	Alu
1.2 16v Eng.CGPB (44kW)	11-		R		**CF121**		Ø 19,05	Alu
	-03/10				**PF973**	Fte	Ø 20,64	Alu, +ABS, +PS
	11-				**CZ086**	Fte	Ø 19,05	Pla

		Spare Parts	F/R	L/R	FRITECH ref.		DIMENSIONS mm.	NOTE
1.2 16v Eng.CGPB (44kW)	11-				**CZ098**	Fte	Ø 19,05	Alu
1.2 TDi Eng.CFWA (55kW)	10-		R		**CF121**		Ø 19,05	Alu
	10-				**CZ086**	Fte	Ø 19,05	Pla
	10-				**CZ098**	Fte	Ø 19,05	Alu
1.2 TSi Eng.CBZA (63kW)	10-		R		**CF121**		Ø 19,05	Alu
	10-				**CZ086**	Fte	Ø 19,05	Pla
	10-				**CZ098**	Fte	Ø 19,05	Alu
1.2 TSi Eng.CBZB (77kW)	10-		R		**CF121**		Ø 19,05	Alu
	10-				**CZ086**	Fte	Ø 19,05	Pla
	10-				**CZ098**	Fte	Ø 19,05	Alu
1.4 16v Eng.BXW/ CGGB (63kW)	07-		R		**CF121**		Ø 19,05	Alu
	-03/10				**PF973**	Fte	Ø 20,64	Alu, +ABS
	07-				**PF463**	Fte	Ø 20,64	Alu, +ABS
	07-				**CZ077**	Fte	Ø 19,05	Pla
	07-				**CZ099**	Fte	Ø 19,05	
	07-				**PZ077**	Sachs	Ø 15,87	Alu
1.4 TDi Eng.BMS/ BNV (59kW)	07-		R		**CF121**		Ø 19,05	Alu
	07-				**PF993**	Bch	Ø 20,64	Alu, -ABS
	-03/10				**PF973**	Fte	Ø 20,64	Alu, +ABS
	07-				**PF463**	Fte	Ø 20,64	Alu, +ABS
	07-				**PF329**	Fte	Ø 20,64	Alu, -ABS, +PS
	07-				**CZ086**	Fte	Ø 19,05	Pla, Cod. ID PR 0EJ
	07-				**CZ098**	Fte	Ø 19,05	Alu, Cod. ID PR 0EJ
	07-				**PZ077**	Sachs	Ø 15,87	Alu
1.4 TDi Eng.BNM (51kW)	07-		R		**CF121**		Ø 19,05	Alu
	07-				**PF993**	Bch	Ø 20,64	Alu, -ABS
	-03/10				**PF973**	Fte	Ø 20,64	Alu, +ABS
	07-				**PF463**	Fte	Ø 20,64	Alu, +ABS
	07-				**PF329**	Fte	Ø 20,64	Alu, -ABS, +PS
	07-				**CZ077**	Fte	Ø 19,05	Pla
	07-				**CZ099**	Fte	Ø 19,05	
	07-				**PZ077**	Sachs	Ø 15,87	Alu
1.4 TSi Eng.CAVE/ CTHE (132kW)	10-		R		**CF121**		Ø 19,05	Alu
1.6 16v Eng.BTS/ CFNA (77kW)	07-		R		**CF121**		Ø 19,05	Alu
	-03/10				**PF973**	Fte	Ø 20,64	Alu, +ABS
	07-				**PF463**	Fte	Ø 20,64	Alu, +ABS
	07-				**CZ077**	Fte	Ø 19,05	Pla
	07-				**CZ099**	Fte	Ø 19,05	
	07-				**PZ077**	Sachs	Ø 15,87	Alu
1.6 TDi Eng.CAYA (55kW)	10-		R		**CF121**		Ø 19,05	Alu
	10-				**CZ086**	Fte	Ø 19,05	Pla
	10-				**CZ098**	Fte	Ø 19,05	Alu
1.6 TDi Eng.CAYB (66kW)	10-		R		**CF121**		Ø 19,05	Alu
	10-				**CZ086**	Fte	Ø 19,05	Pla
	10-				**CZ098**	Fte	Ø 19,05	Alu
1.6 TDi Eng.CAYC (77kW)	10-		R		**CF121**		Ø 19,05	Alu
	10-				**CZ086**	Fte	Ø 19,05	Pla
	10-				**CZ098**	Fte	Ø 19,05	Alu
1.9 TDi Eng.BLS/ BSW (77kW)	07-		R		**CF121**		Ø 19,05	Alu
	-03/10				**PF973**	Fte	Ø 20,64	Alu, +ABS
	07-				**PF463**	Fte	Ø 20,64	Alu, +ABS
	07-				**CZ086**	Fte	Ø 19,05	Pla, Cod. ID PR 0EJ
	07-				**CZ098**	Fte	Ø 19,05	Alu, Cod. ID PR 0EJ
	07-				**PZ077**	Sachs	Ø 15,87	Alu
Fabia III (NJ3,5), SW 1/15-								
1.0 MPI Eng.CHYA (44kW)	15-		R		**CF121**		Ø 19,05	Alu
1.0 MPI Eng.CHYB (55kW)	15-		R		**CF121**		Ø 19,05	Alu
1.2 TSi Eng.CJZC (66kW)	15-		R		**CF121**		Ø 19,05	Alu
1.2 TSi Eng.CJZD (81kW)	15-		R		**CF121**		Ø 19,05	Alu
1.4 TDi Eng.CUSB (66kW)	15-		R		**CF121**		Ø 19,05	Alu
1.4 TDi Eng.CUTA (77kW)	15-		R		**CF121**		Ø 19,05	Alu
Favorit (781) 5/89-9/94								
1.3 Eng.136B (50kW)	1/94-9/94		R		**CF126**		Ø 19,05	

SKODA

		Spare Parts	F/R	L/R	FRITECH ref.		DIMENSIONS mm.	NOTE
1.3 Eng.136L (45kW)	90-92		R		**CF240**	Luc	Ø 19,05	
	1/93-94		R		**CF126**		Ø 19,05	
	90-94				**PF359**		Ø 19,05	
1.3 Eng.781.135 (42kW)	91-94		R		**CF244**	Luc	Ø 22,20	
	91-94				**PF359**		Ø 19,05	
1.3 Eng.781.135 (43kW)	89-94		R		**CF244**	Luc	Ø 22,20	
	89-94				**PF359**		Ø 19,05	
1.3 Eng.781.135 (44kW)	90-94		R		**CF244**	Luc	Ø 22,20	
	90-94				**PF359**		Ø 19,05	
1.3 Eng.781.135E (40kW)	90-92		R		**CF240**	Luc	Ø 19,05	
	93-94		R		**CF126**		Ø 19,05	
	90-94				**PF359**		Ø 19,05	
Favorit Forman (785) 8/91-6/95								
1.3 Eng.136B (50kW)	94-95		R		**CF126**		Ø 19,05	
1.3 Eng.781.135 (40-42-43-44kW)	91-92		R		**CF240**	Luc	Ø 19,05	
	93-9/94		R		**CF126**		Ø 19,05	
1.3 Eng.781.135E (40kW)	92-95		R		**CF126**		Ø 19,05	
1.3 Eng.OHC (45kW)	91-92		R		**CF240**	Luc	Ø 19,05	
	93-95		R		**CF126**		Ø 19,05	
1.6, 16v (50-55kW)	92-95		R		**CF107**		Ø 19,05	A/T
	92-95		R		**CF127**		Ø 20,64	Alu, M/T
1.9 SDi, TD (46-66kW)	92-95		R		**CF107**		Ø 19,05	A/T
	92-95		R		**CF127**		Ø 20,64	Alu, M/T
Favorit Pick-Up (787) 12/92-6/97								
1.3 Eng.135B (40kW)	92-97		R		**CF150**	Luc	Ø 22,22	
1.3 Eng.136B (50kW)	92-97		R		**CF150**	Luc	Ø 22,22	
1.3 Eng.781.135 (40-42-43kW)	92-97		R		**CF150**	Luc	Ø 22,22	
Felicia I (6U1, 6U5), SW 10/94-3/98								
1.3 Eng.135B/ AMG (40kW)	94-98		R		**CF150**	Luc	Ø 22,22	-ABS
	94-98		R		**CF126**		Ø 19,05	+ABS
	94-98				**PF495**	Ate	Ø 23,81	Alu, +ABS
	94-98				**PF039**	Luc	Ø 22,20	-ABS
1.3 Eng.135L/ AMJ (43kW)	94-98		R		**CF126**		Ø 19,05	
	94-98				**PF495**	Ate	Ø 23,81	Alu, +ABS
1.3 Eng.136B/ AMH (50kW)	94-98		R		**CF150**	Luc	Ø 22,22	-ABS
	94-98		R		**CF126**		Ø 19,05	+ABS
	94-98				**PF495**	Ate	Ø 23,81	Alu, +ABS
	94-98				**PF039**	Luc	Ø 22,20	-ABS
1.6 Eng.AEE (55kW)	95-98		R		**CF150**	Luc	Ø 22,22	-ABS
	95-98		R		**CF126**		Ø 19,05	+ABS
	95-98				**PF495**	Ate	Ø 23,81	Alu, +ABS
	95-98				**PF039**	Luc	Ø 22,20	-ABS
1.9 D Eng.AEF (47kW)	95-98		R		**CF150**	Luc	Ø 22,22	-ABS
	95-98		R		**CF126**		Ø 19,05	+ABS
	95-98				**PF495**	Ate	Ø 23,81	Alu, +ABS
	95-98				**PF039**	Luc	Ø 22,20	-ABS
Felicia I (797) Pick-Up 1/95-2/98								
1.3 Eng.135M (40kW)	95-98		R		**CF150**	Luc	Ø 22,22	-ABS
	95-98		R		**CF126**		Ø 19,05	+ABS
	95-98				**PF495**	Ate	Ø 23,81	Alu, +ABS
	95-98				**PF039**	Luc	Ø 22,20	-ABS
1.3 Eng.136B/ 136M (50kW)	95-98		R		**CF150**	Luc	Ø 22,22	-ABS
	95-98		R		**CF126**		Ø 19,05	+ABS
	95-98				**PF495**	Ate	Ø 23,81	Alu, +ABS
	95-98				**PF039**	Luc	Ø 22,20	-ABS
1.6 Eng.AEE (55kW)	95-98		R		**CF150**	Luc	Ø 22,22	-ABS
	95-98		R		**CF126**		Ø 19,05	+ABS
	95-98				**PF495**	Ate	Ø 23,81	Alu, +ABS
	95-98				**PF039**	Luc	Ø 22,20	-ABS
1.9 D Eng.AEF (47kW)	95-98		R		**CF150**	Luc	Ø 22,22	-ABS
	95-98		R		**CF126**		Ø 19,05	+ABS
	95-98				**PF495**	Ate	Ø 23,81	Alu, +ABS
	95-98				**PF039**	Luc	Ø 22,20	-ABS

		Spare Parts	F/R	L/R	FRITECH ref.		DIMENSIONS mm.	NOTE
Felicia II (6U1, 6U5), SW 3/98-6/01								
1.3 Eng.AMH (50kW)	98-01		R		**CF126**		Ø 19,05	
	98-01				**PF039**	Luc	Ø 22,20	-ABS
1.3 (Exc. SW) Eng.AMG (40kW)	98-01		R		**CF126**		Ø 19,05	
	98-01				**PF039**	Luc	Ø 22,20	-ABS
1.3 (Exc. SW) Eng.AMJ (43kW)	98-01		R		**CF126**		Ø 19,05	
	98-01				**PF039**	Luc	Ø 22,20	-ABS
1.6 Eng.AEE (55kW)	98-01		R		**CF126**		Ø 19,05	
	98-01				**PF039**	Luc	Ø 22,20	-ABS
1.9 D Eng.AEF (47kW)	98-01		R		**CF149**	Luc	Ø 20,64	
	98-01				**PF039**	Luc	Ø 22,20	-ABS
Octavia II (1U2, 1U5), SW 9/96-6/04								
1.4 Eng.AXP/ BCA (55kW)	00-04		R		**CF121**		Ø 19,05	Alu, A/T
	00-04		R		**CF127**		Ø 20,64	Alu, M/T
	00-04				**PF910**	Ate	Ø 23,80	Ch 1U1530144-, Alu, +ABS, -ESP
	00-04				**PF799**	Ate	Ø 23,81	Alu, +ESP, LHD
	00-04				**PF818**	Bch	Ø 23,81	Ch -1U1530143, Alu, -ESP, RHD
	00-04				**PF234**		Ø 23,81	Ch -1U1530143, -ESP, LHD
	00-04				**CZ081**	Fte	Ø 23,81	Alu
	00-04				**CZ026**		Ø 23,81	Pla
	00-04				**PZ064**	Sachs	Ø 15,87	Pla
	00-04				**PZ107**	Sachs	Ø 15,87	
1.4 (Exc. SW) Eng.AMD (44kW)	99-04		R		**CF121**		Ø 19,05	Alu, A/T
	99-04		R		**CF127**		Ø 20,64	Alu, M/T
	99-04				**PF910**	Ate	Ø 23,80	Ch 1U1530144-, Alu, +ABS, -ESP
	8/00-				**PF799**	Ate	Ø 23,81	Alu, +ESP, LHD
	99-8/00				**PF241**	Ate	Ø 23,81	Alu, +ESP, LHD
	99-04				**PF818**	Bch	Ø 23,81	Ch -1U1530143, Alu, -ESP, RHD
	99-04				**PF234**		Ø 23,81	Ch -1U1530143, -ESP, LHD
	99-04				**PZ064**	Sachs	Ø 15,87	Pla
	99-04				**PZ107**	Sachs	Ø 15,87	
1.6 Eng.AEE (55kW)	96-04		R		**CF107**		Ø 19,05	A/T, LHD
	96-04		R		**CF121**		Ø 19,05	Alu, A/T, LHD
	96-04		R		**CF127**		Ø 20,64	Alu, M/T, LHD
	96-04				**PF910**	Ate	Ø 23,80	Ch 1U1530144-, Alu, +ABS, -ESP
	8/00-				**PF799**	Ate	Ø 23,81	Alu, +ESP, LHD
	96-8/00				**PF241**	Ate	Ø 23,81	Alu, +ESP, LHD
	96-04				**PF818**	Bch	Ø 23,81	Ch -1U1530143, Alu, -ESP, RHD
	96-04				**PF234**		Ø 23,81	Ch -1U1530143, -ESP, LHD
	96-04				**CZ081**	Fte	Ø 23,81	Alu
	96-04				**CZ026**		Ø 23,81	Pla
	96-04				**PZ064**	Sachs	Ø 15,87	Pla
	96-04				**PZ107**	Sachs	Ø 15,87	
1.6 Eng.AEH/ AKL/ APF (74kW)	97-04		R		**CF121**		Ø 19,05	Alu, A/T
	97-04		R		**CF127**		Ø 20,64	Alu, M/T
	97-04				**PF910**	Ate	Ø 23,80	Ch 1U1530144-, Alu, +ABS, -ESP
	8/00-				**PF799**	Ate	Ø 23,81	Alu, +ESP, LHD
	97-8/00				**PF241**	Ate	Ø 23,81	Alu, +ESP, LHD
	97-04				**PF818**	Bch	Ø 23,81	Ch -1U1530143, Alu, -ESP, RHD
	97-04				**PF234**		Ø 23,81	Ch -1U1530143, -ESP, LHD
	97-04				**CZ081**	Fte	Ø 23,81	Alu
	97-04				**CZ026**		Ø 23,81	Pla
	97-04				**PZ064**	Sachs	Ø 15,87	Pla
	97-04				**PZ107**	Sachs	Ø 15,87	
1.6 Eng.AVU/ BFQ (75kW)	00-04		R		**CF121**		Ø 19,05	Alu, A/T
	00-04		R		**CF127**		Ø 20,64	Alu, M/T
	00-04				**PF910**	Ate	Ø 23,80	Ch 1U1530144-, Alu, +ABS, -ESP
	00-04				**PF799**	Ate	Ø 23,81	Alu, +ESP, LHD
	00-04				**PF818**	Bch	Ø 23,81	Ch -1U1530143, Alu, -ESP, RHD
	00-04				**PF234**		Ø 23,81	Ch -1U1530143, -ESP, LHD
	00-04				**CZ081**	Fte	Ø 23,81	Alu
	00-04				**CZ026**		Ø 23,81	Pla
	00-04				**PZ064**	Sachs	Ø 15,87	Pla
	00-04				**PZ107**	Sachs	Ø 15,87	

SKODA

		Spare Parts	F/R	L/R	FRITECH ref.		DIMENSIONS mm.	NOTE
1.8 20v Eng.AGN (92kW)	96-04				**PF910**	Ate	Ø 23,80	Ch 1U1530144-, Alu, +ABS, -ESP
	8/00-				**PF799**	Ate	Ø 23,81	Alu, +ESP, LHD
	96-8/00				**PF241**	Ate	Ø 23,81	Alu, +ESP, LHD
	96-04				**PF818**	Bch	Ø 23,81	Ch -1U1530143, Alu, -ESP, RHD
	96-04				**PF234**		Ø 23,81	Ch -1U1530143, -ESP, LHD
	9/96-6/04				**CZ076**		Ø 19,05	
	96-04				**PZ064**	Sachs	Ø 15,87	Pla
	96-04				**PZ107**	Sachs	Ø 15,87	
1.8 T. RS Eng.AUQ (132kW)	5/01-6/04				**CZ076**		Ø 19,05	
	01-04				**PZ064**	Sachs	Ø 15,87	Pla
	01-04				**PZ107**	Sachs	Ø 15,87	
1.8 T., 4WD Eng.AGU/ ARX/ ARZ/ AUM (110kW)	97-04				**PF910**	Ate	Ø 23,80	Ch 1U1530144-, Alu, +ABS, -ESP
	8/00-				**PF799**	Ate	Ø 23,81	Alu, +ESP, LHD
	97-8/00				**PF241**	Ate	Ø 23,81	Alu, +ESP, LHD
	97-04				**PF818**	Bch	Ø 23,81	Ch -1U1530143, Alu, -ESP, RHD
	97-04				**PF234**		Ø 23,81	Ch -1U1530143, -ESP, LHD
	97-04				**CZ076**		Ø 19,05	
	97-04				**PZ064**	Sachs	Ø 15,87	Pla
	97-04				**PZ107**	Sachs	Ø 15,87	
1.9 SDi Eng.AGP/ AQM (50kW)	97-04		R		**CF121**		Ø 19,05	Alu, A/T
	97-04		R		**CF127**		Ø 20,64	Alu, M/T
	97-04				**PF910**	Ate	Ø 23,80	Ch 1U1530144-, Alu, +ABS, -ESP
	8/00-				**PF799**	Ate	Ø 23,81	Alu, +ESP, LHD
	97-8/00				**PF241**	Ate	Ø 23,81	Alu, +ESP, LHD
	97-04				**PF818**	Bch	Ø 23,81	Ch -1U1530143, Alu, -ESP, RHD
	97-04				**PF234**		Ø 23,81	Ch -1U1530143, -ESP, LHD
	97-04				**CZ081**	Fte	Ø 23,81	Alu
	97-04				**CZ026**		Ø 23,81	Pla
	97-04				**PZ064**	Sachs	Ø 15,87	Pla
	97-04				**PZ107**	Sachs	Ø 15,87	
1.9 SDi (Exc. SW) Eng.AEY (47kW)	96-04		R		**CF107**		Ø 19,05	A/T, LHD
	96-04		R		**CF121**		Ø 19,05	Alu, A/T, LHD
	96-04		R		**CF127**		Ø 20,64	Alu, M/T, LHD
	96-04				**PF910**	Ate	Ø 23,80	Ch 1U1530144-, Alu, +ABS, -ESP
	8/00-				**PF799**	Ate	Ø 23,81	Alu, +ESP, LHD
	96-8/00				**PF241**	Ate	Ø 23,81	Alu, +ESP, LHD
	96-04				**PF818**	Bch	Ø 23,81	Ch -1U1530143, Alu, -ESP, RHD
	96-04				**PF234**		Ø 23,81	Ch -1U1530143, -ESP, LHD
	96-04				**PZ064**	Sachs	Ø 15,87	Pla
	96-04				**PZ107**	Sachs	Ø 15,87	
1.9 TDi Eng.AHF/ ASV (81kW)	97-04				**PF910**	Ate	Ø 23,80	Ch 1U1530144-, Alu, +ABS, -ESP
	8/00-				**PF799**	Ate	Ø 23,81	Alu, +ESP, LHD
	97-8/00				**PF241**	Ate	Ø 23,81	Alu, +ESP, LHD
	97-04				**PF818**	Bch	Ø 23,81	Ch -1U1530143, Alu, -ESP, RHD
	97-04				**PF234**		Ø 23,81	Ch -1U1530143, -ESP, LHD
	8/97-6/04				**CZ076**		Ø 19,05	
	97-04				**PZ064**	Sachs	Ø 15,87	Pla
	97-04				**PZ107**	Sachs	Ø 15,87	
1.9 TDi Eng.ASZ (96kW)	03-04				**PF910**	Ate	Ø 23,80	Ch 1U1530144-, Alu, +ABS, -ESP
	03-04				**PF799**	Ate	Ø 23,81	Alu, +ESP, LHD
	03-04				**PF818**	Bch	Ø 23,81	Ch -1U1530143, Alu, -ESP, RHD
	03-04				**PF234**		Ø 23,81	Ch -1U1530143, -ESP, LHD
	03-04				**PZ064**	Sachs	Ø 15,87	Pla
	03-04				**PZ107**	Sachs	Ø 15,87	
1.9 TDi 4WD SW Eng.ATD/ AXR (74kW)	00-04				**PF910**	Ate	Ø 23,80	Ch 1U1530144-, Alu, +ABS, -ESP
	00-04				**PF799**	Ate	Ø 23,81	Alu, +ESP, LHD
	00-04				**PF818**	Bch	Ø 23,81	Ch -1U1530143, Alu, -ESP, RHD
	00-04				**PF234**		Ø 23,81	Ch -1U1530143, -ESP, LHD
	00-04				**CZ076**		Ø 19,05	
	00-04				**PZ064**	Sachs	Ø 15,87	Pla
	00-04				**PZ107**	Sachs	Ø 15,87	
1.9 TDi, 4WD Eng.AGR/ ALH (66kW)	96-04		R		**CF107**		Ø 19,05	A/T
	96-04		R		**CF121**		Ø 19,05	Alu, A/T
	96-04		R		**CF127**		Ø 20,64	Alu, M/T

		Spare Parts	F/R	L/R	FRITECH ref.		DIMENSIONS mm.	NOTE
1.9 TDi, 4WD Eng.AGR/ ALH (66kW)	96-04				**PF910**	Ate	Ø 23,80	Ch 1U1530144-, Alu, +ABS, -ESP
	8/00-				**PF799**	Ate	Ø 23,81	Alu, +ESP, LHD
	96-8/00				**PF241**	Ate	Ø 23,81	Alu, +ESP, LHD
	96-04				**PF818**	Bch	Ø 23,81	Ch -1U1530143, Alu, -ESP, RHD
	96-04				**PF234**		Ø 23,81	Ch -1U1530143, -ESP, LHD
	9/96-6/04				**CZ076**		Ø 19,05	
	96-04				**PZ064**	Sachs	Ø 15,87	Pla
	96-04				**PZ107**	Sachs	Ø 15,87	
2.0 SW Eng.ATF (88kW)	00-04				**PF910**	Ate	Ø 23,80	Ch 1U1530144-, Alu, +ABS, -ESP
	00-8/00				**PF241**	Ate	Ø 23,81	Alu, +ESP, LHD
	8/00-				**PF799**	Ate	Ø 23,81	Alu, +ESP, LHD
	00-04				**PF818**	Bch	Ø 23,81	Ch -1U1530143, Alu, -ESP, RHD
	00-04				**PF234**		Ø 23,81	Ch -1U1530143, -ESP, LHD
	00-04				**PZ064**	Sachs	Ø 15,87	Pla
	00-04				**PZ107**	Sachs	Ø 15,87	
2.0, 4WD Eng.AEG/ APK/ AQY/ AZH/ AZJ (85kW)	99-04				**PF910**	Ate	Ø 23,80	Ch 1U1530144-, Alu, +ABS, -ESP
	4/99-8/00				**PF241**	Ate	Ø 23,81	Alu, +ESP, LHD
	8/00-				**PF799**	Ate	Ø 23,81	Alu, +ESP, LHD
	4/99-04				**PF818**	Bch	Ø 23,81	Ch -1U1530143, Alu, -ESP, RHD
	4/99-04				**PF234**		Ø 23,81	Ch -1U1530143, -ESP, LHD
	4/99-6/04				**CZ076**		Ø 19,05	
	4/99-04				**PZ064**	Sachs	Ø 15,87	Pla
	4/99-04				**PZ107**	Sachs	Ø 15,87	
Octavia III (1Z3, 1Z5), SW 6/04-4/13								
1.2 TSi Eng.CBZB (77kW)	10-				**PF869**	Ate	Ø 22,20	Alu
	10-				**CZ080**	Sachs	Ø 19,05	Alu, Cod. ID PR 0EJ
1.4 Eng.AXP/ BCA (55kW)	04-				**PF647**	Ate	Ø 22,20	Ch -1Z6217091, Alu
	04-				**PF869**	Ate	Ø 22,20	Ch 1Z6217092-, Alu
	04-				**PF646**	Bch	Ø 22,20	Ch -1Z6173091, Alu
	04-				**PF870**	Bch	Ø 22,20	Ch 1Z6173092-, Alu
	04-				**CZ077**	Fte	Ø 19,05	Pla
	04-				**CZ099**	Fte	Ø 19,05	
	04-				**CZ080**	Sachs	Ø 19,05	Alu, Cod. ID PR 0EJ
1.4 Eng.BUD / CGGA (59kW)	04-				**PF647**	Ate	Ø 22,20	Ch -1Z6217091, Alu
					PF869	Ate	Ø 22,20	Ch 1Z6217092-, Alu
	04-				**PF646**	Bch	Ø 22,20	Ch -1Z6173091, Alu
					PF870	Bch	Ø 22,20	Ch 1Z6173092-, Alu
	04-				**CZ077**	Fte	Ø 19,05	Pla
	04-				**CZ099**	Fte	Ø 19,05	
	07-				**CZ080**	Sachs	Ø 19,05	Alu, Cod. ID PR 0EJ
1.4 TSi Eng.CAXA (90kW)	04-				**PF869**	Ate	Ø 22,20	Alu
	09-				**CZ080**	Sachs	Ø 19,05	Alu, Cod ID PR 0EJ
1.6 Eng.BGU/ BSE/ BSF (75kW)	04-				**PF647**	Ate	Ø 22,20	Ch -1Z6217091, Alu
	04-				**PF869**	Ate	Ø 22,20	Ch 1Z6217092-, Alu
	04-				**PF646**	Bch	Ø 22,20	Ch -1Z6173091, Alu
	04-				**PF870**	Bch	Ø 22,20	Ch 1Z6173092-, Alu
	04-				**CZ077**	Fte	Ø 19,05	Pla
	04-				**CZ099**	Fte	Ø 19,05	
	04-				**CZ080**	Sachs	Ø 19,05	Alu, Cod. ID PR 0EJ
1.6 Eng.CCSA/ CMXA (75kW)	08-				**PF869**	Ate	Ø 22,20	Alu
	08-				**PF870**	Bch	Ø 22,20	Alu
	08-				**CZ077**	Fte	Ø 19,05	Pla
	08-				**CZ099**	Fte	Ø 19,05	
1.6 FSI Eng.BLF (85kW)	04-				**PF647**	Ate	Ø 22,20	Ch -1Z6217091, Alu
	04-				**PF869**	Ate	Ø 22,20	Ch 1Z6217092-, Alu
	04-				**PF646**	Bch	Ø 22,20	Ch -1Z6173091, Alu
	04-				**PF870**	Bch	Ø 22,20	Ch 1Z6173092-, Alu
	04-				**CZ077**	Fte	Ø 19,05	Pla
	04-				**CZ099**	Fte	Ø 19,05	
	04-				**CZ080**	Sachs	Ø 19,05	Alu, Cod. ID PR 0EJ
1.6 LPG Eng.CHGA/ CCSA (75kW)	08-				**PF869**	Ate	Ø 22,20	Alu
	9/09-				**CZ080**	Sachs	Ø 19,05	Alu, Cod. ID PR 0EJ
1.6 TDi, 4WD Eng.CAYC (77kW)	09-				**PF869**	Ate	Ø 22,20	Alu
	09-				**CZ080**	Sachs	Ø 19,05	Alu, Cod. ID PR 0EJ

SKODA

		Spare Parts	F/R	L/R	FRITECH ref.		DIMENSIONS mm.	NOTE
1.8 16v TFSI Eng.BZB/ CDAA (118kW)	07-				**PF869**	Ate	Ø 22,20	Alu
	07-				**CZ080**	Sachs	Ø 19,05	Alu, Cod. ID PR 0EJ
1.8 TSi Eng.CDAB (112kW)	09-				**PF869**	Ate	Ø 22,20	Alu
	09-				**CZ080**	Sachs	Ø 19,05	Alu, Cod. ID PR 0EJ
1.9 TDi Eng.BKC/ BJB/ BLS/ BXE (77kW)	04-				**PF647**	Ate	Ø 22,20	Ch -1Z6217091, Alu
	04-				**PF869**	Ate	Ø 22,20	Ch 1Z6217092-, Alu
	04-				**PF646**	Bch	Ø 22,20	Ch -1Z6173091, Alu
	04-				**PF870**	Bch	Ø 22,20	Ch 1Z6173092-, Alu
	04-				**CZ080**	Sachs	Ø 19,05	Alu, Cod. ID PR 0EJ
1.9 TDi 4WD SW Eng.BKC/ BJB (77kW)	04-				**PF647**	Ate	Ø 22,20	Ch -1Z6217091, Alu
	04-				**PF869**	Ate	Ø 22,20	Ch 1Z6217092-, Alu
	04-				**PF646**	Bch	Ø 22,20	Ch -1Z6173091, Alu
	04-				**PF870**	Bch	Ø 22,20	Ch 1Z6173092-, Alu
	04-				**CZ080**	Sachs	Ø 19,05	Alu, Cod. ID PR 0EJ
2.0 16v TFSi RS Eng.BWA/ CCZA (147kW)	04-				**PF647**	Ate	Ø 22,20	Ch -1Z6217091, Alu
	04-				**PF869**	Ate	Ø 22,20	Ch 1Z6217092-, Alu
	04-				**PF646**	Bch	Ø 22,20	Ch -1Z6173091, Alu
	04-				**PF870**	Bch	Ø 22,20	Ch 1Z6173092-, Alu
2.0 FSI Eng.BLR/ BLY/ BVX/ BVY/ BVZ (110kW)	04-				**PF647**	Ate	Ø 22,20	Ch -1Z6217091, Alu
	04-				**PF869**	Ate	Ø 22,20	Ch 1Z6217092-, Alu
	04-				**PF646**	Bch	Ø 22,20	Ch -1Z6173091, Alu
	04-				**PF870**	Bch	Ø 22,20	Ch 1Z6173092-, Alu
	04-				**CZ080**	Sachs	Ø 19,05	Alu, Cod. ID PR 0EJ
2.0 FSI 4WD SW Eng.BLR/ BLY (110kW)	04-				**PF647**	Ate	Ø 22,20	Ch -1Z6217091, Alu
	04-				**PF869**	Ate	Ø 22,20	Ch 1Z6217092-, Alu
	04-				**PF646**	Bch	Ø 22,20	Ch -1Z6173091, Alu
	04-				**PF870**	Bch	Ø 22,20	Ch 1Z6173092-, Alu
	04-				**CZ080**	Sachs	Ø 19,05	Alu, Cod. ID PR 0EJ
2.0 TDi Eng.AZV (100kW)	04-				**PF869**	Ate	Ø 22,20	Alu
	04-				**CZ080**	Sachs	Ø 19,05	Alu, Cod. ID PR 0EJ
2.0 TDi 16v RS Eng.BMN/ CEGA (125kW)	06-				**PF869**	Ate	Ø 22,20	Alu
	06-				**CZ080**	Sachs	Ø 19,05	Alu, Cod. ID PR 0EJ
2.0 TDi, 4WD Eng.BKD/ BMM/ CFHC / CLCB (103kW)	04-				**PF647**	Ate	Ø 22,20	Ch -1Z6217091, Alu
	04-				**PF869**	Ate	Ø 22,20	Ch 1Z6217092-, Alu
	04-				**PF646**	Bch	Ø 22,20	Ch -1Z6173091, Alu
	04-				**PF870**	Bch	Ø 22,20	Ch 1Z6173092-, Alu
	04-				**CZ080**	Sachs	Ø 19,05	Alu, Cod. ID PR 0EJ
2.0 TDi, 4WD Eng.CLCA/ CFHF (81kW)	10-				**PF869**	Ate	Ø 22,20	Alu
	10-				**PF870**	Bch	Ø 22,20	Ch 1Z6173092-, Alu
	10-				**CZ080**	Sachs	Ø 19,05	Alu, Cod. ID PR 0EJ
Rapid (120G, 130G, 135G) 2/83-10/91								
1.2 (43kW)	83-90		R		**CF268**		Ø 19,05	
1.3 Eng.135-8 (43kW)	84-90		R		**CF268**		Ø 19,05	
1.3 Eng.742/ 13 (45kW)	85-88		R		**CF268**		Ø 19,05	
Rapid II, SW (NH1, 3) 1/13-								
1.2 Eng.CGPC (55kW)	13-		R		**CF1012**		Ø 19,05	Alu, Cod. ID PR 1KL
	13-				**CZ086**	Fte	Ø 19,05	Pla
	13-				**CZ098**	Fte	Ø 19,05	Alu
1.2 TSi Eng.CBZA (63kW)	13-		R		**CF1012**		Ø 19,05	Alu, Cod. ID PR 1KL
	13-				**CZ086**	Fte	Ø 19,05	Pla
	13-				**CZ098**	Fte	Ø 19,05	Alu
1.2 TSi Eng.CBZB (77kW)	13-		R		**CF1012**		Ø 19,05	Alu, Cod. ID PR 1KL
	13-				**CZ086**	Fte	Ø 19,05	Pla
	13-				**CZ098**	Fte	Ø 19,05	Alu
1.4 TSI Eng.CAXA (90kW)	13-		R		**CF1012**		Ø 19,05	Alu, Cod. ID PR 1KL
1.6 Eng.CFNA (77kW)	13-		R		**CF1012**		Ø 19,05	Alu, Cod. ID PR 1KL
	13-				**CZ086**	Fte	Ø 19,05	Pla
	13-				**CZ098**	Fte	Ø 19,05	Alu
1.6 TDi Eng.CAYB (66kW)	13-		R		**CF1012**		Ø 19,05	Alu, Cod. ID PR 1KL
1.6 TDi Eng.CAYC (77kW)	13-		R		**CF1012**		Ø 19,05	Alu, Cod. ID PR 1KL
Roomster (5J7) 9/06-12/15								
1.2 12v Eng.BME (47kW)	9/06-		R		**CF121**		Ø 19,05	Alu, Cod. ID PR 1KC
	06-				**PF973**	Fte	Ø 20,64	Alu, +ABS

		Spare Parts	F/R	L/R	FRITECH ref.		DIMENSIONS mm.	NOTE
1.2 12v Eng.BZG/ CGPA (51kW)	9/06-		R		**CF121**		Ø 19,05	Alu, Cod. ID PR 1KC
	06-				**PF463**	Fte	Ø 20,64	Alu, +ABS
	06-				**CZ077**	Fte	Ø 19,05	Pla
	06-				**CZ099**	Fte	Ø 19,05	
	06-				**PZ077**	Sachs	Ø 15,87	Alu
1.2 TDi Eng.CFWA (55kW)	10-		R		**CF121**		Ø 19,05	Alu, Cod. ID PR 1KC
1.2 TSi Eng.CBZA (63kW)	10-		R		**CF121**		Ø 19,05	Alu, Cod. ID PR 1KC
1.2 TSi Eng.CBZB (77kW)	10-		R		**CF121**		Ø 19,05	Alu, Cod. ID PR 1KC
1.4 16v Eng.BXW/ CGGB (63kW)	9/06-		R		**CF121**		Ø 19,05	Alu, Cod. ID PR 1KC
	06-				**PF463**	Fte	Ø 20,64	Alu, +ABS
	06-				**PF973**	Fte	Ø 20,64	Alu, +ABS
	06-				**CZ077**	Fte	Ø 19,05	Pla
	06-				**CZ099**	Fte	Ø 19,05	
	06-				**PZ077**	Sachs	Ø 15,87	Alu
1.4 TDi Eng.BMS (59kW)	9/06-		R		**CF121**		Ø 19,05	Alu, Cod. ID PR 1KC
	06-				**PF463**	Fte	Ø 20,64	Alu, +ABS
	06-				**PF973**	Fte	Ø 20,64	Alu, +ABS
	06-				**CZ086**	Fte	Ø 19,05	Pla
	06-				**CZ098**	Fte	Ø 19,05	Alu
	06-				**PZ077**	Sachs	Ø 15,87	Alu
1.4 TDi Eng.BNM (51kW)	9/06-		R		**CF121**		Ø 19,05	Alu, Cod. ID PR 1KC
	06-				**PF463**	Fte	Ø 20,64	Alu, +ABS
	06-				**PF973**	Fte	Ø 20,64	Alu, +ABS
	06-				**CZ077**	Fte	Ø 19,05	Pla
	06-				**CZ099**	Fte	Ø 19,05	
	06-				**PZ077**	Sachs	Ø 15,87	Alu
1.6 16v Eng.BTS/ CFNA (77kW)	06-				**PF463**	Fte	Ø 20,64	Alu, +ABS
	06-				**PF973**	Fte	Ø 20,64	Alu, +ABS
	06-				**CZ077**	Fte	Ø 19,05	Pla
	06-				**CZ099**	Fte	Ø 19,05	
	06-				**PZ077**	Sachs	Ø 15,87	Alu
1.6 TDi Eng.CAYB (66kW)	10-		R		**CF121**		Ø 19,05	Alu, Cod. ID PR 1KC
1.6 TDi Eng.CAYC (77kW)	10-		R		**CF121**		Ø 19,05	Alu, Cod. ID PR 1KC
1.9 TDi Eng.AXR (74kW)	06-		R		**CF121**		Ø 19,05	Alu, Cod. ID PR 1KC
1.9 TDi Eng.BLS/ BSW (77kW)	06-		R		**CF121**		Ø 19,05	Alu, Cod. ID PR 1KC
	06-				**PF463**	Fte	Ø 20,64	Alu, +ABS
	06-				**PF973**	Fte	Ø 20,64	Alu, +ABS
	9/06-				**CZ086**	Fte	Ø 19,05	Pla
	9/06-				**CZ098**	Fte	Ø 19,05	Alu
	06-				**PZ077**	Sachs	Ø 15,87	Alu
Superb I (3U4) 2/02-8/08								
1.8 T. Eng.AWT (110kW)	02-				**PF826**	Ate	Ø 25,40	Alu
	02-				**PF534**	Trw	Ø 25,40	Alu
	2/02-				**CZ074**	Sachs	Ø 22,20	Pla
	2/02-				**CZ096**	Sachs	Ø 22,20	
	2/02-				**PZ085**	Sachs	Ø 19,05	Pla
	2/02-				**PZ105**	Sachs	Ø 19,05	Alu
1.9 TDi Eng.AVB (74kW)	02-08				**PF826**	Ate	Ø 25,40	Alu
	02-				**PF534**	Trw	Ø 25,40	Alu
	02-08				**CZ074**	Sachs	Ø 22,20	Pla
	02-08				**CZ096**	Sachs	Ø 22,20	
	02-				**PZ085**	Sachs	Ø 19,05	Pla
	02-				**PZ105**	Sachs	Ø 19,05	Alu
1.9 TDi Eng.AWX/ AVF (96kW)	02-				**PF826**	Ate	Ø 25,40	Alu
	02-				**PF534**	Trw	Ø 25,40	Alu
	02-08				**CZ074**	Sachs	Ø 22,20	Pla
	02-08				**CZ096**	Sachs	Ø 22,20	
1.9 TDi Eng.BPZ (85kW)	02-08				**PF826**	Ate	Ø 25,40	Alu
	07-08				**CZ074**	Sachs	Ø 22,20	Pla
	07-08				**CZ096**	Sachs	Ø 22,20	
	07-08				**PZ085**	Sachs	Ø 19,05	Pla
	07-08				**PZ105**	Sachs	Ø 19,05	Alu
1.9 TDi Eng.BSV (77kW)	02-08				**PF826**	Ate	Ø 25,40	Alu
	05-08				**CZ074**	Sachs	Ø 22,20	Pla

SKODA

		Spare Parts	F/R	L/R	FRITECH ref.		DIMENSIONS mm.	NOTE
1.9 TDi Eng.BSV (77kW)	05-08				**CZ096**	Sachs	Ø 22,20	
	05-08				**PZ085**	Sachs	Ø 19,05	Pla
	05-08				**PZ105**	Sachs	Ø 19,05	Alu
2.0 Eng.AZM (85kW)	02-				**PF826**	Ate	Ø 25,40	Alu
	02-				**PF534**	Trw	Ø 25,40	Alu
	2/02-				**CZ074**	Sachs	Ø 22,20	Pla
	2/02-				**CZ096**	Sachs	Ø 22,20	
	2/02-				**PZ085**	Sachs	Ø 19,05	Pla
	2/02-				**PZ105**	Sachs	Ø 19,05	Alu
2.0 TDi Eng.BSS (103kW)	02-08				**PF826**	Ate	Ø 25,40	Alu
	05-				**CZ074**	Sachs	Ø 22,20	Pla
	05-				**CZ096**	Sachs	Ø 22,20	
2.5 TDi Eng.AYM (114kW)	02-				**PF826**	Ate	Ø 25,40	Alu
	02-				**PF534**	Trw	Ø 25,40	Alu
	2/02-				**CZ074**	Sachs	Ø 22,20	Pla
	2/02-				**CZ096**	Sachs	Ø 22,20	
2.5 TDi Eng.BDG (120kW)	02-08				**PF826**	Ate	Ø 25,40	Alu
	03-				**PF534**	Trw	Ø 25,40	Alu
	03-				**CZ074**	Sachs	Ø 22,20	Pla
	03-				**CZ096**	Sachs	Ø 22,20	
2.8 V6 Eng.AMX (142kW)	02-				**PF826**	Ate	Ø 25,40	Alu
	02-				**PF534**	Trw	Ø 25,40	Alu
	2/02-				**CZ074**	Sachs	Ø 22,20	Pla
	2/02-				**CZ096**	Sachs	Ø 22,20	
	2/02-				**PZ085**	Sachs	Ø 19,05	Pla
	2/02-				**PZ105**	Sachs	Ø 19,05	Alu
Superb II (3T4, 3T5), SW 9/08-7/15								
1.4 TSi Eng.CAXC (92kW)	08-7/11				**CZ080**	Sachs	Ø 19,05	Alu, Cod. ID PR 0EJ
1.6 TDi Eng.CAYC (77kW)	10-7/11				**CZ080**	Sachs	Ø 19,05	Alu, Cod. ID PR 0EJ
1.8 TSi, 4WD Eng.BZB/ CDAA (118kW)	08-7/11				**CZ080**	Sachs	Ø 19,05	Alu, Cod. ID PR 0EJ
1.8 TSi, 4WD Eng.CDAB (112kW)	09-7/11				**CZ080**	Sachs	Ø 19,05	Alu, Cod. ID PR 0EJ
1.9 TDi Eng.BLS/ BXE (77kW)	8/08-7/11				**CZ080**	Sachs	Ø 19,05	Alu, Cod. ID PR 0EJ
2.0 TDi 16V, 4WD Eng.BKD/ BSS/ BMP/ CFFB/ CLJA (103kW)	08-7/11				**CZ080**	Sachs	Ø 19,05	Alu, Cod. ID PR 0EJ
2.0 TDi, 4WD Eng.BMN/ CBBB/ CFGB (125kW)	08-7/11				**CZ080**	Sachs	Ø 19,05	Alu, Cod. ID PR 0EJ
2.0 TSi Eng.CCZA (147kW)	10-7/11				**CZ080**	Sachs	Ø 19,05	Alu, Cod. ID PR 0EJ
3.6 TSi, 4WD Eng.CDVA (191kW)	09-7/11				**CZ080**	Sachs	Ø 19,05	Alu, Cod. ID PR 0EJ
Yeti (5L) 9/09-								
1.2 TSi Eng.CBZB (77kW)	09-				**PF869**	Ate	Ø 22,20	Alu
	09-				**CZ080**	Sachs	Ø 19,05	Alu, Cod. ID PR 0EJ
1.4 TSi Eng.CAXA (90kW)	10-				**PF869**	Ate	Ø 22,20	Alu
	10-				**CZ080**	Sachs	Ø 19,05	Alu, Cod. ID PR 0EJ
1.6 Eng.CWVA (81kW)	14-				**PF869**	Ate	Ø 22,20	Alu, Cod. ID PR 1ZF/1ZE
1.6 TDi Eng.CAYC (77kW)	10-				**PF869**	Ate	Ø 22,20	Alu
	10-				**CZ080**	Sachs	Ø 19,05	Alu, Cod. ID PR 0EJ
1.8 TSi 4WD Eng.CDAB (112kW)	09-				**PF869**	Ate	Ø 22,20	Alu
	09-				**CZ080**	Sachs	Ø 19,05	Alu, Cod. ID PR 0EJ
1.8 TSi, 4WD Eng.CDAA (118kW)	09-				**PF869**	Ate	Ø 22,20	Alu
	09-				**CZ080**	Sachs	Ø 19,05	Alu, Cod. ID PR 0EJ
2.0 TDi, 4WD Eng.CBDB/ CFHC (103kW)	09-				**PF869**	Ate	Ø 22,20	Alu
	09-				**CZ080**	Sachs	Ø 19,05	Alu, Cod. ID PR 0EJ
2.0 TDi, 4WD Eng.CEGA/ CFJA (125kW)	09-				**PF869**	Ate	Ø 22,20	Alu
	09-				**CZ080**	Sachs	Ø 19,05	Alu, Cod. ID PR 0EJ
2.0 TDi, 4WD Eng.CFHA/ CFHF (81kW)	09-				**PF869**	Ate	Ø 22,20	Alu
	09-				**CZ080**	Sachs	Ø 19,05	Alu, Cod. ID PR 0EJ

SKODA LCV

Fabia Praktik 4/02-12/07								
1.2 Eng.AWY/ BMD (40kW)	02-		R		**CF121**		Ø 19,05	Alu
	02-				**PF993**	Bch	Ø 20,64	Alu, -ABS
	02-				**PF661**	Fte	Ø 19,05	Alu, +ABS, -PS
	03-				**PF973**	Fte	Ø 20,64	Alu, +ABS, +PS
	02-				**PF329**	Fte	Ø 20,64	Alu, -ABS, +PS
	02-				**CZ077**	Fte	Ø 19,05	Pla

		Spare Parts	F/R	L/R	FRITECH ref.		DIMENSIONS mm.	NOTE
1.2 Eng.AWY/ BMD (40kW)	02-				**CZ099**	Fte	Ø 19,05	
	02-				**PZ077**	Sachs	Ø 15,87	Alu
1.2 Eng.AZQ/ BME (47kW)	03-		R		**CF121**		Ø 19,05	Alu
	03-				**PF993**	Bch	Ø 20,64	Alu, -ABS
	03-				**PF661**	Fte	Ø 19,05	Alu, +ABS, -PS
	03-				**PF973**	Fte	Ø 20,64	Alu, +ABS, +PS
	03-				**PF329**	Fte	Ø 20,64	Alu, -ABS, +PS
	03-				**CZ077**	Fte	Ø 19,05	Pla
	03-				**CZ099**	Fte	Ø 19,05	
	03-				**PZ077**	Sachs	Ø 15,87	Alu
1.4 Eng.AME/ AQW/ ATZ (50kW)	00-		R		**CF121**		Ø 19,05	Alu
	00-				**PF993**	Bch	Ø 20,64	Alu, -ABS
	00-				**PF661**	Fte	Ø 19,05	Alu, +ABS, -PS
	03-				**PF973**	Fte	Ø 20,64	Alu, +ABS, +PS
	00-				**PF329**	Fte	Ø 20,64	Alu, -ABS, +PS
	00-				**PF330**		Ø 20,64	Alu, +ABS, +PS
	00-				**PZ077**	Sachs	Ø 15,87	Alu
1.4 TDi Eng.BNM (51kW)	05-		R		**CF121**		Ø 19,05	Alu
	05-				**PF993**	Bch	Ø 20,64	Alu, -ABS
	05-				**PF661**	Fte	Ø 19,05	Alu, +ABS, -PS
	03-				**PF973**	Fte	Ø 20,64	Alu, +ABS, +PS
	05-				**PF463**	Fte	Ø 20,64	Alu, +ABS, -PS
	05-				**PF329**	Fte	Ø 20,64	Alu, -ABS, +PS
	05-				**CZ077**	Fte	Ø 19,05	Pla
	05-				**CZ099**	Fte	Ø 19,05	
	05-07				**PZ077**	Sachs	Ø 15,87	Alu
1.9 SDi Eng.ASY (47kW)	99-		R		**CF121**		Ø 19,05	Alu
	99-				**PF993**	Bch	Ø 20,64	Alu, -ABS
	99-				**PF661**	Fte	Ø 19,05	Alu, +ABS, -PS
	03-				**PF973**	Fte	Ø 20,64	Alu, +ABS, +PS
	99-				**PF463**	Fte	Ø 20,64	Alu, +ABS, -PS
	99-				**PF329**	Fte	Ø 20,64	Alu, -ABS, +PS
	99-				**PF330**		Ø 20,64	Alu, +ABS, +PS
	99-				**CZ077**	Fte	Ø 19,05	Pla
	99-				**CZ099**	Fte	Ø 19,05	
	99-				**PZ077**	Sachs	Ø 15,87	Alu
Roomster Van, Praktik (5J) 3/07-12/15								
1.2 Eng.BZG/ CGPA (51kW)	-03/10				**PF973**	Fte	Ø 20,64	Alu, +ABS
	3/07-				**CZ077**	Fte	Ø 19,05	Pla
	3/07-				**CZ099**	Fte	Ø 19,05	
	3/07-				**PZ077**	Sachs	Ø 15,87	Alu
1.4 Eng.BXW/ CGGB (63kW)	-03/10				**PF973**	Fte	Ø 20,64	Alu, +ABS
	3/07-				**CZ077**	Fte	Ø 19,05	Pla
	3/07-				**CZ099**	Fte	Ø 19,05	
	3/07-				**PZ077**	Sachs	Ø 15,87	Alu
1.4 TDi Eng.BMS/ BNV (59kW)	07-				**PF973**	Fte	Ø 20,64	Alu, +ABS
	07-				**CZ086**	Fte	Ø 19,05	Pla
	07-				**CZ098**	Fte	Ø 19,05	Alu
	07-				**PZ077**	Sachs	Ø 15,87	Alu
1.4 TDi Eng.BNM (51kW)	07-				**PF973**	Fte	Ø 20,64	Alu, +ABS
	3/07-				**CZ077**	Fte	Ø 19,05	Pla
	3/07-				**CZ099**	Fte	Ø 19,05	
	3/07-				**PZ077**	Sachs	Ø 15,87	Alu

SMART

Cabrio (450) 3/00-1/04								
0.6 Eng.M160E6ALB03 (40kW)	00-04		R	L	**CF568**		Ø 22,00	
	00-04		R	R	**CF569**		Ø 22,00	
0.6 Eng.M160E6ALB05 (45kW)	01-04		R	L	**CF568**		Ø 22,00	
	01-04		R	R	**CF569**		Ø 22,00	
0.6 Eng.Suprex (52kW)	02-04		R	L	**CF568**		Ø 22,00	
	02-04		R	R	**CF569**		Ø 22,00	
0.7 Eng.M160.910/ 920 (55kW)	03-04		R	L	**CF568**		Ø 22,00	
	03-04		R	R	**CF569**		Ø 22,00	

SMART

		Spare Parts	F/R	L/R	FRITECH ref.		DIMENSIONS mm.	NOTE
0.7 Eng.M160R3 (45kW)	03-04		R	L	**CF568**		Ø 22,00	
	03-04		R	R	**CF569**		Ø 22,00	
0.8 CDi Eng.OM660DE8LA (30kW)	01-04		R	L	**CF568**		Ø 22,00	
	01-04		R	R	**CF569**		Ø 22,00	
City-Coupe (450) 7/98-1/04								
0.6 Eng.M160E6ALB03 (40kW)	-10/99		R	L	**CF570**		Ø 17,46	
	11/99-		R	L	**CF568**		Ø 22,00	
	-10/99		R	R	**CF571**		Ø 17,46	
	11/99-		R	R	**CF569**		Ø 22,00	
	98-99				**PF597**	Bch	Ø 19,05	
	99-04				**PF550**		Ø 19,05	Alu
0.6 Eng.M160E6ALB04 (33kW)	-10/99		R	L	**CF570**		Ø 17,46	
	11/99-		R	L	**CF568**		Ø 22,00	
	-10/99		R	R	**CF571**		Ø 17,46	
	11/99-		R	R	**CF569**		Ø 22,00	
	98-99				**PF597**	Bch	Ø 19,05	
	99-04				**PF550**		Ø 19,05	Alu
0.6 Eng.M160E6ALB05 (45kW)	01-04		R	L	**CF568**		Ø 22,00	
	01-04		R	R	**CF569**		Ø 22,00	
	01-04				**PF550**		Ø 19,05	Alu
0.6 Eng.Suprex (52kW)	02-04		R	L	**CF568**		Ø 22,00	
	02-04		R	R	**CF569**		Ø 22,00	
	02-04				**PF550**		Ø 19,05	Alu
0.7 Eng.M170 (37kW)	03-04		R	L	**CF568**		Ø 22,00	
	03-04		R	R	**CF569**		Ø 22,00	
	03-04				**PF550**		Ø 19,05	Alu
0.7 Eng.M170 (45kW)	03-04		R	L	**CF568**		Ø 22,00	
	03-04		R	R	**CF569**		Ø 22,00	
	03-04				**PF550**		Ø 19,05	Alu
0.7 Eng.M170 (55kW)	03-04		R	L	**CF568**		Ø 22,00	
	03-04		R	R	**CF569**		Ø 22,00	
	03-04				**PF550**		Ø 19,05	Alu
0.8 CDi Eng.OM660DE8LA (30kW)	99-		R	L	**CF568**		Ø 22,00	
	99-		R	R	**CF569**		Ø 22,00	
	99-04				**PF550**		Ø 19,05	Alu
Crossblade 6/02-12/03								
0.6 Eng.Suprex (52kW)	02-		R	L	**CF568**		Ø 22,00	
	02-		R	R	**CF569**		Ø 22,00	
Forfour I (454) 4/04-6/06								
1.1 Eng.M134.910 (47kW)	06-		R		**CF849**	Trw	Ø 19,05	Alu
1.1 Eng.M134.910 (55kW)	04-		R		**CF849**	Trw	Ø 19,05	Alu
1.3 Eng.M135.930 (70kW)	04-		R		**CF849**	Trw	Ø 19,05	Alu
1.5 Eng.M135.950 (80kW)	04-		R		**CF849**	Trw	Ø 19,05	Alu
1.5 Eng.M135.950 (90kW)	04-		R		**CF849**	Trw	Ø 19,05	Alu
1.5 BRABUS Eng.4G15 (130kW)	05-		R		**CF849**	Trw	Ø 19,05	Alu
1.5 CDi Eng.OM639.939 (50kW)	04-		R		**CF849**	Trw	Ø 19,05	Alu
1.5 CDi Eng.OM639.939 (70kW)	04-		R		**CF849**	Trw	Ø 19,05	Alu
Fortwo I (450) 1/04-2/07								
0.7 Eng.M160.910 (40kW)	04-07		R	L	**CF860**		Ø 20,64	Alu
	04-07		R	R	**CF861**		Ø 20,64	Alu
0.7 Eng.M160.910/ 920 (37kW)	04-07		R	L	**CF860**		Ø 20,64	Alu
	04-07		R	R	**CF861**		Ø 20,64	Alu
0.7 Eng.M160.910/ 920 (55kW)	04-07		R	L	**CF860**		Ø 20,64	Alu
	04-07		R	R	**CF861**		Ø 20,64	Alu
0.7 Eng.M170 (37-45-55kW)	04-07		R	L	**CF860**		Ø 20,64	Alu
	04-07		R	R	**CF861**		Ø 20,64	Alu
0.8 CDi Eng.OM660DE8LA (30kW)	04-07		R	L	**CF860**		Ø 20,64	Alu
	04-07		R	R	**CF861**		Ø 20,64	Alu
Fortwo II, Cabrio, Coupe (451) 3/07-3/15								
0.8 CDi Eng.OM660.940 (30kW)	07-15		R	L	**CF568**		Ø 22,00	
	07-15		R	R	**CF569**		Ø 22,00	
	07-				**PF896**		Ø 23,81	Alu
0.8 CDi Eng.OM660.950 (33kW)	07-15		R	L	**CF568**		Ø 22,00	
	07-15		R	R	**CF569**		Ø 22,00	

SMART

		Spare Parts	F/R	L/R	FRITECH ref.		DIMENSIONS mm.	NOTE
0.8 CDi Eng.OM660.950 (33kW)	07-				**PF896**		Ø 23,81	Alu
0.8 CDi Eng.OM660.951 (40kW)	10-15		R	L	**CF568**		Ø 22,00	
	10-15		R	R	**CF569**		Ø 22,00	
	07-				**PF896**		Ø 23,81	Alu
1.0 Eng.M132.910 (45kW)	07-15		R	L	**CF568**		Ø 22,00	
	07-15		R	R	**CF569**		Ø 22,00	
	07-				**PF896**		Ø 23,81	Alu
1.0 Eng.M132.910 (52kW)	07-15		R	L	**CF568**		Ø 22,00	
	07-15		R	R	**CF569**		Ø 22,00	
	07-				**PF896**		Ø 23,81	Alu
1.0 Brabus (88kW)	12-		R	L	**CF568**		Ø 22,00	
	12-		R	R	**CF569**		Ø 22,00	
1.0 Micro Hybrid drive Eng.M132.910 (52kW)	07-				**PF896**		Ø 23,81	Alu
1.0 T. Eng.M132.930 (62kW)	07-15		R	L	**CF568**		Ø 22,00	
	07-15		R	R	**CF569**		Ø 22,00	
	07-				**PF896**		Ø 23,81	Alu
1.0 T. Eng.M132.930 (75kW)	10-15		R	L	**CF568**		Ø 22,00	
	10-15		R	R	**CF569**		Ø 22,00	
	10-				**PF896**		Ø 23,81	Alu
1.0, Brabus Eng.3B21 (72kW)	07-15		R	L	**CF568**		Ø 22,00	
	07-15		R	R	**CF569**		Ø 22,00	
	07-				**PF896**		Ø 23,81	Alu
Fortwo III, Cabrio, Coupe (453) 7/14-								
0.9 Eng.H4B (66kW)	14-		R	L	**CF1022**	Loc	Ø 20,64	Alu
	14-		R	R	**CF1023**	Loc	Ø 20,64	Alu
1.0 Eng.H4D (45kW)	15-		R	L	**CF1022**	Loc	Ø 20,64	Alu
	15-		R	R	**CF1023**	Loc	Ø 20,64	Alu
1.0 Eng.H4DA4 (52kW)	14-		R	L	**CF1022**	Loc	Ø 20,64	Alu
	14-		R	R	**CF1023**	Loc	Ø 20,64	Alu
Roadster, Coupe (452) 4/03-11/05								
0.7 Eng.M160.921 (45kW)	03-		R	L	**CF568**		Ø 22,00	
	03-		R	R	**CF569**		Ø 22,00	
0.7 Eng.M160.922 (60kW)	03-		R	L	**CF568**		Ø 22,00	
	03-		R	R	**CF569**		Ø 22,00	
0.7 Brabus Eng.M160.923 (74kW)	03-		R	L	**CF568**		Ø 22,00	
	03-		R	R	**CF569**		Ø 22,00	

SSANGYONG

Actyon 1/07-								
2.0 Xdi, 4WD Eng.D20DT (100kW)	07-		R		**CF872**		Ø 23,81	Alu
2.0 XDi, Sport Eng.OM664.951 (104kW)	07-		R		**CF872**		Ø 23,81	Alu
2.3 4WD Eng.M161.951 (110kW)	07-		R		**CF872**		Ø 23,81	Alu
Korando I (K4) 12/88-12/96								
2.2 D Eng.DC23 (50kW)	88-		R	L	**CF781**		Ø 22,20	
	88-96		R	R	**CF095**		Ø 22,20	
Korando II (KJ) 12/96-10/10								
2.3, Cabrio Eng.M161.973 (105kW)	98-		R	L	**CF781**		Ø 22,20	
	98-		R	R	**CF095**		Ø 22,20	
2.9 TD, Cabrio Eng.OM662.920 (88kW)	98-		R	L	**CF781**		Ø 22,20	
	98-		R	R	**CF095**		Ø 22,20	
3.2 Eng.M104.995 (156kW)	98-		R	L	**CF781**		Ø 22,20	
	98-		R	R	**CF095**		Ø 22,20	
3.2, Cabrio Eng.M104.995 (154kW)	98-		R	L	**CF781**		Ø 22,20	
	98-		R	R	**CF095**		Ø 22,20	
Kyron 5/05-								
2.0 XDi, 4WD Eng.D20DT (100kW)	10-		R		**CF872**	Luc	Ø 23,81	Alu
2.0 XDi, 4WD Eng.OM664.950 (101-104kW)	10-		R		**CF872**	Luc	Ø 23,81	Alu
2.7 XDi, AWD Eng.OM665.950 (121kW)	07-		R		**CF872**		Ø 23,81	Alu
Musso (FJ) 10/95-12/05								
2.3 Eng.M111.970 (103kW)	96-		R	L	**CF781**	Luc	Ø 22,20	
	96-		R	R	**CF095**	Luc	Ø 22,20	
2.3 D Eng.OM601.940 (59kW)	95-		R	L	**CF781**		Ø 22,20	-ABS
	95-		R	R	**CF095**		Ø 22,20	-ABS

SSANGYONG

		Spare Parts	F/R	L/R	FRITECH ref.		DIMENSIONS mm.	NOTE
2.3 TDiC Eng.OM661 (74kW)	97-03		R	L	**CF781**		Ø 22,20	
	97-03		R	R	**CF095**		Ø 22,20	
2.9 D Eng.OM602.940/ .942 (73kW)	96-		R	L	**CF781**		Ø 22,20	-ABS
	96-		R	R	**CF095**		Ø 22,20	-ABS
2.9 TD Eng.OM662.920 (88kW)	98-		R	L	**CF781**		Ø 22,20	
	98-		R	R	**CF095**		Ø 22,20	
Rexton I 4/02-3/14								
2.7 Xdi, 4WD Eng.OM665.926 (120kW)	04-		R		**CF872**		Ø 23,81	Alu
2.9 TD Eng.OM662.920 (88kW)	02-		R	L	**CF781**		Ø 22,20	
	02-		R	R	**CF095**		Ø 22,20	
3.2 Eng.M162.995 (162kW)	02-		R		**CF872**		Ø 23,81	Alu
Rodius I 5/05-6/13								
2.7 XDi, 4WD Eng.OM665.926 (120kW)	05-		R		**CF872**		Ø 23,81	Alu

SUBARU

Forester I (SF) 8/97-9/02								
2.0 Eng.EJ20 (90-92kW)	98-02		R		**CF701**		Ø 19,00	
2.0 16v Eng.EJ20J (85kW)	97-98		R		**CF701**		Ø 19,00	-ABS
Forester II (SG) 9/02-5/08								
2.0 Eng.EJ20 (116kW)	05-08		R		**CF701**		Ø 19,00	
2.0 16v Eng.EJ20J (92kW)	02-08		R		**CF701**		Ø 19,00	
Impreza I (GC, GF), SW 8/92-12/00								
1.6 i, 4WD Eng.EJ16 (66kW)	92-00		R		**CF701**		Ø 19,00	Mod. Plus, -ABS
	92-00		R		**CF564**		Ø 17,46	
1.6 i, 4WD Eng.EJ16 (70kW)	98-00		R		**CF564**		Ø 17,46	
1.8, 4WD Eng.EJ18E (76kW)	92-00		R		**CF701**		Ø 19,00	Mod. Plus, -ABS
2.0 16v 4WD Eng.EJ20E/ EJ20J/EJ201 (85-92kW)	95-00		R		**CF701**		Ø 19,00	-ABS
Impreza II (GD, GG), SW 12/00-12/07								
1.5 R Eng.EJ150 (77kW)	06-07		R		**CF564**		Ø 17,46	
1.6 i, 4WD Eng.EJ16 (66-70kW)	00-05		R		**CF564**		Ø 17,46	
Impreza III (GH, GR) 1/08-6/11								
1.5 R, AWD Eng.EL154 (79kW)	08-		R		**CF1009**		Ø 19,05	Alu
Justy I (KAD)/ Trendy 11/84-12/94								
1.0, 4WD Eng.EF10 (37kW)	87-88		R		**CF286**		Ø 17,46	Alu
	1/89-94		R		**CF292**		Ø 19,05	Alu
1.0, 4WD Eng.EF10 (40kW)	84-88		R		**CF286**		Ø 17,46	Alu
	1/89-90		R		**CF292**		Ø 19,05	Alu
1.2 4WD Eng.EF12 (55kW)	90-94		R		**CF292**		Ø 19,05	Alu
1.2, 4WD Eng.EF12 (49-50kW)	86-88		R		**CF286**		Ø 17,46	Alu
	1/89-91		R		**CF292**		Ø 19,05	Alu
Justy II (JMA, MS) 10/95-8/03								
1.3 4WD Eng.EF13 (50kW)	95-		R	L	**CF544**		Ø 17,46	Alu
	95-		R	R	**CF543**		Ø 17,46	Alu
1.3 4WD Eng.G13BB (63kW)	01-		R	L	**CF544**		Ø 17,46	Alu
	01-		R	R	**CF543**		Ø 17,46	Alu
Justy III (G3X) 9/03-10/08								
1.3 Eng.M13A (69kW)	03-08		R		**CF677**	Loc	Ø 15,87	Alu
	03-				**PF381**	Bch	Ø 20,64	Alu
1.5 Eng.M15A (73kW)	03-08		R		**CF677**	Loc	Ø 15,87	Alu
Justy IV (JDA) 11/08-12/10								
1.0 Eng.1KRFE (51kW)	08-		R	L	**CF580**		Ø 17,46	Alu
	08-		R	R	**CF788**		Ø 17,46	Alu
Legacy I (BC, BJF), SW 1/89-7/94								
1.8 Eng.EJ18SPI (76kW)	89-91		R		**CF564**		Ø 17,46	
	89-91		R		**CF701**		Ø 19,00	SW
1.8 4WD Eng.EJ18SPI (76kW)	89-91		R		**CF564**		Ø 17,46	
	89-91		R		**CF701**		Ø 19,00	SW
2.0 Eng.EJ20EMPI (85kW)	91-94		R		**CF564**		Ø 17,46	
	91-94		R		**CF701**		Ø 19,00	SW
2.0 4WD Eng.EJ20EMPI (85-92kW)	91-94		R		**CF564**		Ø 17,46	
	91-94		R		**CF701**		Ø 19,00	SW
Legacy II (BD, BG), SW 9/94-3/99								
2.0 16v 4WD Eng.EJ20E/ J (85-92kW)	94-99		R		**CF564**		Ø 17,46	

SUBARU

		Spare Parts	F/R	L/R	FRITECH ref.		DIMENSIONS mm.	NOTE
2.2 i 4WD Eng.EJ22EMPI (94kW)	94-99		R		**CF564**		Ø 17,46	
2.2 i 4WD Eng.EJ22EMPI (96kW)	96-99		R		**CF564**		Ø 17,46	
Legacy III (BE, BH), SW 10/98-9/03								
2.0 16v Eng.EJ20J (85-92kW)	99-03		R		**CF998**		Ø 20,64	
Leone I (AB), SW 1/72-10/84								
1.3 Eng.EA65 (45-53kW)	82-84		R		**CF613**		Ø 14,29	Alu, 3p
	82-84		R		**CF452**		Ø 15,87	Alu, 5p
1.6 Eng.EA71 (63-64kW)	79-84		R		**CF613**		Ø 14,29	Alu, 3p
	79-84		R		**CF452**		Ø 15,87	Alu, 5p
1.6 4WD (Only SW) Eng.EA71 (52kW)	79-84		R		**CF613**		Ø 14,29	Alu, 3p
	79-84		R		**CF452**		Ø 15,87	Alu, 5p
1.8, 4WD Eng.EA81 (59-66-74kW)	80-84		R		**CF613**		Ø 14,29	Alu, 3p
	80-84		R		**CF452**		Ø 15,87	Alu, 5p
Leone II, SW 11/84-2/92								
1.3 (Exc. SW) Eng.EA65 (48-53kW)	84-91		R		**CF454**		Ø 17,46	Alu
1.8 4WD Eng.EA82 (70kW)	86-92		R		**CF454**		Ø 17,46	Alu, 5p
	86-92		R		**CF453**		Ø 19,05	Alu, 3p
1.8 4WD Eng.EA82 (72kW)	86-91		R		**CF454**		Ø 17,46	Alu, 5p
	86-91		R		**CF453**		Ø 19,05	Alu, 3p
1.8 4WD Eng.EA82 (88kW)	88-90		R		**CF454**		Ø 17,46	Alu, 5p
	88-90		R		**CF453**		Ø 19,05	Alu, 3p
1.8, 4WD Eng.EA82 (66kW)	84-90		R		**CF454**		Ø 17,46	Alu, 5p
	84-90		R		**CF453**		Ø 19,05	Alu, 3p
Loyale 1/90-1/92								
All models	90-92		R		**CF454**		Ø 17,46	Alu
	90-92		R		**CF453**		Ø 19,05	Alu, 4WD
Trezia 4/11-12/14								
1.3i Eng.1NRFE (73kW)	11-		R		**CF1025**		Ø 22,20	Alu
1.4 D Eng.1ND-TV (66kW)	11-		R		**CF1025**		Ø 22,20	Alu
Vivio 3/92-10/95								
660 4WD Eng.EN07E (32kW)	92-		R		**CF292**		Ø 19,05	Alu

SUZUKI

Alto I (SS80) 6/82-12/85								
0.8 Eng.F8B (29kW)	6/82-12/85		R		**CF635**		Ø 15,87	
Alto II (EC) 1/86-11/93								
0.8 (SB308/CA) Eng.F8B (29kW)	1/88-93		R		**CF567**		Ø 15,87	Alu
	86-12/87		R		**CF634**		Ø 15,87	
Alto III (EF) 9/94-6/02								
1.0 Eng.G10B (39kW)	94-02		R	L	**CF258**	Nabco	Ø 17,46	Alu
	94-02		R	R	**CF979**	Nabco	Ø 17,46	Alu
	94-02		R		**CF258**	Kbx	Ø 17,46	Alu
Alto IV (FF) 6/02-12/08								
1.1 Eng.F10D (46kW)	6/02-		R		**CF715**	Nabco	Ø 15,87	Alu
Alto V (GF) 1/09-12/14								
1.0 Eng.K10B (50kW)	09-		R		**CF292**		Ø 19,05	Alu
Baleno I (EG), SW 7/95-12/07								
1.3 Eng.G13B (63kW)	95-		R	L	**CF544**		Ø 17,46	Alu
	95-		R	R	**CF543**		Ø 17,46	Alu
1.6i 16v Eng.G16B (72kW)	95-		R	L	**CF544**		Ø 17,46	Alu
	95-		R	R	**CF543**		Ø 17,46	Alu
1.6i 16v 4WD Eng.G16B (72kW)	95-		R	L	**CF544**		Ø 17,46	Alu
	95-		R	R	**CF543**		Ø 17,46	Alu
Celerio 1/15-								
1.0 Eng.K10B (50kW)	15-		R	L	**CF708**	Aisin	Ø 19,05	Alu
Grand Vitara I (FT, GT) 3/98-9/05								
1.6i 16v, 4WD Eng.G16B (69-73kW)	98-		R	L	**CF822**		Ø 22,20	
	98-		R	R	**CF821**		Ø 22,20	
2.0 Eng.J20A (94-97kW)	3/98-		R	L	**CF822**		Ø 22,20	
	3/98-		R	R	**CF821**		Ø 22,20	
2.0 HDi Eng.RHW/ RHZ(DW10ATED4) (80kW)	01-		R	L	**CF822**		Ø 22,20	
	01-		R	R	**CF821**		Ø 22,20	
2.0 TD Eng.RF (64kW)	3/98-		R	L	**CF822**		Ø 22,20	
	3/98-		R	R	**CF821**		Ø 22,20	

SUZUKI

		Spare Parts	F/R	L/R	FRITECH ref.		DIMENSIONS mm.	NOTE
2.5 V6 24v Eng.H25A (106kW)	4/98-		R	L	**CF822**		Ø 22,20	
	4/98-		R	R	**CF821**		Ø 22,20	
2.7 Eng.H27B (135kW)	03-		R	L	**CF822**		Ø 22,20	
	03-		R	R	**CF821**		Ø 22,20	
2.7 V6 Eng.H27A (127kW)	01-		R	L	**CF822**		Ø 22,20	
	01-		R	R	**CF821**		Ø 22,20	
Grand Vitara II (JT) 10/05-								
1.6 Eng.M16A (78kW)	05-		R		**CF822**		Ø 22,20	
1.9 DDiS Eng.F9Q (95kW)	05-		R		**CF822**		Ø 22,20	
2.0 Eng.J20A (103kW)	05-		R		**CF822**		Ø 22,20	
Ignis I (FH) 10/00-9/03								
1.3, 4WD Eng.M13A (60-61-66kW)	00-03		R		**CF715**	Nabco	Ø 15,87	Alu
	10/00-				**PF796**		Ø 20,64	Alu
Ignis II (MH) 9/03-12/08								
1.3 16v Eng.M13A (69kW)	03-		R		**CF677**	Loc	Ø 15,87	Alu
	03-				**PF935**	Bch	Ø 20,64	Alu, -ABS
	03-				**PF381**	Bch	Ø 20,64	Alu
1.3 DDis 16v Eng.Z13DT (51kW)	03-		R		**CF677**	Loc	Ø 15,87	Alu
	03-				**PF381**	Bch	Ø 20,64	Alu
1.5 Sport Eng.M15A (80kW)	03-				**PF935**	Bch	Ø 20,64	Alu, -ABS
1.5, 4WD Eng.M15A (73kW)	03-		R		**CF677**	Loc	Ø 15,87	Alu
	03-				**PF935**	Bch	Ø 20,64	Alu, -ABS
	03-				**PF381**	Bch	Ø 20,64	Alu
Jimny II (FJ) 9/98-								
1.3 16v, 4WD Eng.G13BB (59kW)	3/98-		R	L	**CF464**	Nissin	Ø 19,05	Alu
	3/98-		R	R	**CF716**	Nissin	Ø 19,05	Alu
	98-				**PF577**	Aisin	Ø 22,20	+ABS
	98-				**PF851**	Aisin	Ø 22,20	Alu, -ABS
1.3 16v, 4WD Eng.M13A (60-63-66kW)	01-		R	L	**CF464**	Nissin	Ø 19,05	Alu
	01-		R	R	**CF716**	Nissin	Ø 19,05	Alu
	01-				**PF577**	Aisin	Ø 22,20	+ABS
	01-				**PF851**	Aisin	Ø 22,20	Alu, -ABS
1.3 4WD Eng.G13BB (63kW)	98-		R	L	**CF464**	Nissin	Ø 19,05	Alu
	98-		R	R	**CF716**	Nissin	Ø 19,05	Alu
	98-				**PF577**	Aisin	Ø 22,20	+ABS
	98-				**PF851**	Aisin	Ø 22,20	Alu, -ABS
1.5 DDiS Eng.K9K760 (63kW)	05-		R	L	**CF464**	Nissin	Ø 19,05	Alu
	05-		R	R	**CF716**	Nissin	Ø 19,05	Alu
	05-				**PF577**	Aisin	Ø 22,20	+ABS
1.5 DDiS 4WD Eng.K9K700 (48kW)	03-		R	L	**CF464**	Nissin	Ø 19,05	Alu
	03-		R	R	**CF716**	Nissin	Ø 19,05	Alu
	03-				**PF577**	Aisin	Ø 22,20	+ABS
	03-				**PF851**	Aisin	Ø 22,20	Alu, -ABS
Kizashi (FR) 10/10-								
2.4, 4WD Eng.J24B (131kW)	10-				**PZ145**	Fte	Ø 15,87	
Liana (ER), SW 7/01-								
1.3 Eng.M13A (60-66kW)	01-		R	L	**CF544**		Ø 17,46	Alu
	01-		R	R	**CF543**		Ø 17,46	Alu
1.4 DDiS Eng.RB414D (66kW)	05-		R	L	**CF544**		Ø 17,46	Alu
	05-		R	R	**CF543**		Ø 17,46	Alu
	05-				**CZ103**	Fte	Ø 19,05	Pla
1.6, 4WD Eng.M16A (76-78kW)	02-		R	L	**CF544**		Ø 17,46	Alu
	02-		R	R	**CF543**		Ø 17,46	Alu
LJ 80 1/80-1/84								
0.8 Eng.F8A (29kW)	1/80-1/84		R	L	**CF565**	Nissin	Ø 22,20	Alu
	1/80-1/84		R	R	**CF566**	Nissin	Ø 22,20	Alu
Samurai (SJ) 11/88-12/03								
1.0 (SJ410) Eng.F10A (30-31-33kW)	88-90		R		**CF251**	Luc	Ø 22,22	
1.3 (SJ413) Eng.G13A (44-47-50-52-54kW)	88-89		R	L	**CF512**		Ø 22,20	Alu
	88-89		R	R	**CF509**		Ø 22,20	Alu
	91-		R		**CF773**	Luc	Ø 22,20	
	88-90		R		**CF251**	Luc	Ø 22,22	Santana
1.3 (SJ413) Eng.G13BA (50-51-58-63-74kW)	88-89		R	L	**CF512**		Ø 22,20	Alu
	88-89		R	R	**CF509**		Ø 22,20	Alu

		Spare Parts	F/R	L/R	FRITECH ref.		DIMENSIONS mm.	NOTE
1.3 (SJ413) Eng.G13BA (50-51-58-63-74kW)	91-		R		**CF773**	Luc	Ø 22,20	
	88-90		R		**CF251**	Luc	Ø 22,22	Santana
1.9 TD Eng.XUD9/ TE (46kW)	98-		R		**CF773**	Luc	Ø 22,20	
Sidekick 7/88-1/98								
All models	91-98		R	L	**CF555**		Ø 22,20	5p
	88-90		R	L	**CF467**		Ø 23,81	Alu
	91-95		R	L	**CF303**		Ø 23,81	3p
	91-98		R	R	**CF554**		Ø 22,20	5p
	88-90		R	R	**CF468**		Ø 23,81	Alu
	91-95		R	R	**CF513**		Ø 23,81	3p
SJ 410 9/81-12/90								
1.0, Cabrio Eng.F10A (33kW)	82-10/88		R	L	**CF465**	Nissin	Ø 22,20	Alu, Front Disc Brake
	82-10/88		R	L	**CF565**	Nissin	Ø 22,20	Alu, Front Drum Brake
	85-87		R	L	**CF561**	Nissin	Ø 22,20	Alu, Santana, Cabrio
	82-10/88		R	R	**CF466**	Nissin	Ø 22,20	Alu, Front Disc Brake
	82-10/88		R	R	**CF566**	Nissin	Ø 22,20	Alu, Front Drum Brake
	85-87		R	R	**CF562**	Nissin	Ø 22,20	Alu, Santana, Cabrio
	88-90		R		**CF251**	Luc	Ø 22,22	
SJ 413 9/84-8/90								
1.3 Eng.G13A (44-47kW)	84-87		R	L	**CF561**	Nissin	Ø 22,20	Alu, Santana
	86-89		R	L	**CF512**		Ø 22,20	Alu
	84-87		R	R	**CF562**	Nissin	Ø 22,20	Alu, Santana
	86-89		R	R	**CF509**		Ø 22,20	Alu
	91-		R		**CF773**	Luc	Ø 22,20	
	89-90		R		**CF251**	Luc	Ø 22,22	Santana
Splash 4/08-								
1.0 Eng.K10B (50kW)	08-		R		**CF808**	Bch	Ø 19,05	Alu
	08-				**PF901**	Bch	Ø 23,20	Alu, +ESP
	08-				**PF886**	Bch	Ø 22,20	Alu, -ESP
1.2 Eng.K12B (63kW)	08-		R		**CF808**	Bch	Ø 19,05	Alu
	08-				**PF901**	Bch	Ø 23,20	Alu, +ESP
	08-				**PF886**	Bch	Ø 22,20	Alu, -ESP
1.2 VVT Eng.K12B (66-69kW)	10-		R		**CF808**	Bch	Ø 19,05	Alu
	10-				**PF901**	Bch	Ø 23,20	Alu, +ESP
	10-				**PF886**	Bch	Ø 22,20	Alu, -ESP
1.3 DDiS Eng.D13A (55kW)	08-		R		**CF808**	Bch	Ø 19,05	Alu
	08-				**PF901**	Bch	Ø 23,20	Alu, +ESP
	08-				**PF886**	Bch	Ø 22,20	Alu, -ESP
Swift I (AA) 10/83-12/89								
1.0 (SA310, AA41/43) Eng.G10A (37-39-40kW)	1/84-89		R		**CF301**	Sanyco	Ø 17,46	Alu
1.3 (SA413, AA51/53) Eng.G13A (44-47-50-52-54kW)	84-89		R		**CF301**	Sanyco	Ø 17,46	Alu
1.3 GTi/GXi (SA413, AA33) Eng.G13B (50-51-58-63-74kW)	10/86-89		R		**CF301**	Sanyco	Ø 17,46	Alu
Swift II (AH, AJ, EA, MA) 3/89-12/03								
1.0 Eng.G10A (39-40kW)	95-		R	L	**CF544**		Ø 17,46	Alu, Exc. H-Back
	95-		R	R	**CF543**		Ø 17,46	Alu, Exc. H-Back
	89-92		R		**CF291**	Uac	Ø 15,87	H-Back
1.0 (SF310, AA44) Eng.G10A (37kW)	95-		R	L	**CF544**		Ø 17,46	Alu, Exc. H-Back
	95-		R	R	**CF543**		Ø 17,46	Alu, Exc. H-Back
	89-92		R		**CF291**	Uac	Ø 15,87	H-Back
1.3 Eng.G13BB (63kW)	01-03		R	L	**CF544**		Ø 17,46	Alu, Exc. H-Back
	01-03		R	R	**CF543**		Ø 17,46	Alu, Exc. H-Back
1.3 (SF413, AH35, MA), Cabrio Eng.G13A (50-51-52-63kW)	89-92		R	L	**CF544**		Ø 17,46	Alu, Exc. H-Back
	89-92		R	R	**CF543**		Ø 17,46	Alu, Exc. H-Back
	89-92		R		**CF301**	Sanyco	Ø 17,46	Alu
	89-92		R		**CF291**	Uac	Ø 15,87	H-Back
1.3 GTi (SF413, AA34) Eng.G13B (74kW)	89-		R		**CF301**	Sanyco	Ø 17,46	Alu
	89-		R		**CF291**	Uac	Ø 15,87	H-Back
1.6i 16v, 4WD (SF416, AH, AJ14) Eng.G16B (68-70kW)	90-10/96		R	L	**CF990**	Nissin	Ø 19,05	Alu, -ABS
	89-		R	L	**CF544**		Ø 17,46	Alu, Exc. H-Back
	90-10/96		R	R	**CF991**	Nissin	Ø 19,05	Alu, -ABS
	89-		R	R	**CF543**		Ø 17,46	Alu, Exc. H-Back

SUZUKI

		Spare Parts	F/R	L/R	FRITECH ref.		DIMENSIONS mm.	NOTE
Swift III (SG) 9/05-9/10								
1.3 4WD Eng.M13A (66kW)	06-		R	L	**CF991**	Nissin	Ø 19,05	Alu, Made in Ungary
	06-		R	R	**CF990**	Nissin	Ø 19,05	Alu, Made in Ungary
	06-		R		**CF808**	Bch	Ø 19,05	Alu, Made in Japan
1.3 DDis Eng.D13A (55kW)	05-		R		**CF808**	Bch	Ø 19,05	Alu
	05-				**PF901**	Bch	Ø 23,20	Alu, +ESP
	05-				**PF886**	Bch	Ø 22,20	Alu, -ESP
1.3 DDis 16v Eng.Z13DT (51kW)	05-		R		**CF808**	Bch	Ø 19,05	Alu
	05-				**PF886**	Bch	Ø 22,20	Alu, -ESP
1.3, 4WD Eng.M13A (68kW)	06-		R	L	**CF991**	Nissin	Ø 19,05	Alu, Made in Ungary
	06-		R	R	**CF990**	Nissin	Ø 19,05	Alu, Made in Ungary
	05-		R		**CF808**	Bch	Ø 19,05	Alu, Made in Japan
	05-				**PF886**	Bch	Ø 22,20	Alu, -ESP
	05-				**PF964**	Nissin	Ø 22,20	Alu, M/T+A/T
1.5, 4WD Eng.M15A (75kW)	05-		R		**CF808**	Bch	Ø 19,05	Alu
	05-				**PF886**	Bch	Ø 22,20	Alu, -ESP
1.6 16v Eng.M16A (92kW)	07-				**PF901**	Bch	Ø 23,20	Alu, +ESP
Swift IV (FZ, NZ) 10/10-								
1.2, 4WD Eng.K12B (69kW)	10-		R		**CF925**		Ø 19,05	Alu
1.3 DDiS Eng.D13A (55kW)	10-		R		**CF925**		Ø 19,05	Alu
1.6 Eng.M16A (100kW)	12-		R		**CF925**		Ø 19,05	Alu
Sx4 (GY) 6/06-								
1.5 Eng.M15A (73kW)	06-		R		**CF808**	Bch	Ø 19,05	Alu
	06-				**PF849**	Bch	Ø 22,20	Alu, +ESP
	06-				**PF848**	Bch	Ø 22,20	Alu, -ESP
	06-				**PZ145**	Fte	Ø 15,87	
1.5 16v Eng.M15A (82kW)	09-		R		**CF808**	Bch	Ø 19,05	Alu
	09-				**PF849**	Bch	Ø 22,20	Alu, +ESP
	09-				**PF848**	Bch	Ø 22,20	Alu, -ESP
	09-				**PZ145**	Fte	Ø 15,87	
1.6 16v, 4WD Eng.M16A (82-86-88kW)	09-		R		**CF808**	Bch	Ø 19,05	Alu
	09-				**PF849**	Bch	Ø 22,20	Alu, +ESP
	09-				**PF848**	Bch	Ø 22,20	Alu, -ESP
	09-				**PZ145**	Fte	Ø 15,87	
1.6 DDiS Eng.9HX (66kW)	07-		R		**CF808**	Bch	Ø 19,05	Alu
	07-				**PF849**	Bch	Ø 22,20	Alu, +ESP
	07-				**PF848**	Bch	Ø 22,20	Alu, -ESP
	07-				**PZ145**	Fte	Ø 15,87	
1.6, 4WD Eng.M16A (79kW)	06-		R		**CF808**	Bch	Ø 19,05	Alu
	06-				**PF849**	Bch	Ø 22,20	Alu, +ESP
	06-				**PF848**	Bch	Ø 22,20	Alu, -ESP
	06-				**PZ145**	Fte	Ø 15,87	
1.9 DDiS, 4WD Eng.D19AA (88kW)	06-		R		**CF808**	Bch	Ø 19,05	Alu
	06-				**PF849**	Bch	Ø 22,20	Alu, +ESP
	06-				**PF848**	Bch	Ø 22,20	Alu, -ESP
	06-				**PZ145**	Fte	Ø 15,87	
2.0 DDiS, 4WD Eng.D20AA (99kW)	09-		R		**CF808**	Bch	Ø 19,05	Alu
	09-				**PF849**	Bch	Ø 22,20	Alu, +ESP
	09-				**PF848**	Bch	Ø 22,20	Alu, -ESP
	09-				**PZ145**	Fte	Ø 15,87	
Traker 1/91-1/98								
All models	96-98		R	L	**CF555**		Ø 22,20	
	91-94		R	L	**CF303**		Ø 23,81	
	96-98		R	R	**CF554**		Ø 22,20	
	91-94		R	R	**CF513**		Ø 23,81	
Vitara (ET, TA) 7/88-3/99								
1.6 Trazione integrale Eng.G16A(8V) (54kW)	2/93-99		R	L	**CF303**		Ø 23,81	
	2/93-99		R	R	**CF513**		Ø 23,81	
	10/98-12/98		R		**CF251**	Luc	Ø 22,22	Spain
1.6, Cabrio Eng.G16A (55-59-60kW)	10/88-1/93		R	L	**CF467**		Ø 23,81	Alu
	2/93-99		R	L	**CF303**		Ø 23,81	
	10/88-1/93		R	R	**CF468**		Ø 23,81	Alu
	2/93-99		R	R	**CF513**		Ø 23,81	
	88-		R		**CF251**	Luc	Ø 22,22	Spain

SUZUKI

		Spare Parts	F/R	L/R	FRITECH ref.		DIMENSIONS mm.	NOTE
1.6i 16v, Cabrio Eng.G16B (68-69-70-71-72kW)	2/93-99		R	L	**CF303**		Ø 23,81	
	90-1/93		R	L	**CF467**		Ø 23,81	Alu
	2/93-99		R	R	**CF513**		Ø 23,81	
	90-1/93		R	R	**CF468**		Ø 23,81	Alu
	90-99		R		**CF251**	Luc	Ø 22,22	Spain
1.9 D, Cabrio Eng.XUD9/ A (50kW)	95-98		R		**CF251**	Luc	Ø 22,22	Spain
1.9 D, Cabrio Eng.XUD9SD (55kW)	96-99		R		**CF251**	Luc	Ø 22,22	Spain
2.0 16v, Cabrio Eng.J20A (97kW)	96-99		R	L	**CF555**		Ø 22,20	
	96-99		R	R	**CF554**		Ø 22,20	
2.0 TD Eng.RFM (64kW)	95-98		R	L	**CF555**		Ø 22,20	
	95-98		R	R	**CF554**		Ø 22,20	
2.0 TD Eng.RFS (52kW)	97-98		R	L	**CF555**		Ø 22,20	
	94-97		R	L	**CF303**		Ø 23,81	
	97-98		R	R	**CF554**		Ø 22,20	
	94-97		R	R	**CF513**		Ø 23,81	
	94-98		R		**CF251**	Luc	Ø 22,22	Spain
2.0 V6 24v Eng.H20A (100kW)	94-98		R	L	**CF555**		Ø 22,20	
	94-98		R	R	**CF554**		Ø 22,20	
Wagon R+ I (EM) 2/93-5/00								
1.0 Eng.K10A (48kW)	98-00		R		**CF694**	Nabco	Ø 15,87	Alu
1.2, 4WD Eng.K12A (51kW)	98-00		R		**CF694**	Nabco	Ø 15,87	Alu
Wagon R+ II (MM) 5/00-12/08								
1.0 Eng.G10A (39kW)	03-05		R		**CF677**	Loc	Ø 15,87	Alu
	03-05				**PF380**	Bch	Ø 20,64	Alu, -ABS
1.0 Eng.Z10XEP (44kW)	04-				**PF380**	Bch	Ø 20,64	Alu, -ABS
1.2 Eng.Z12XEP (59kW)	04-		R		**CF677**	Loc	Ø 15,87	Alu
1.3 16v, 4WD Eng.G13BB (56kW)	03-		R		**CF677**	Loc	Ø 15,87	Alu
	5/00-		R		**CF715**	Nabco	Ø 15,87	Alu
	5/00-				**PF381**	Bch	Ø 20,64	Alu, +ABS
	9/00-				**PF380**	Bch	Ø 20,64	Alu, -ABS
1.3 DDis 16v Eng.Z13DT (51kW)	03-		R		**CF677**	Loc	Ø 15,87	Alu
	03-		R		**CF715**	Nabco	Ø 15,87	Alu
	03-				**PF381**	Bch	Ø 20,64	Alu, +ABS
	03-				**PF380**	Bch	Ø 20,64	Alu, -ABS
1.3, 4WD Eng.M13A (69kW)	03-		R		**CF677**	Loc	Ø 15,87	Alu
	03-		R		**CF715**	Nabco	Ø 15,87	Alu
	03-				**PF380**	Bch	Ø 20,64	Alu, -ABS
X-90 (EL) 9/95-12/98								
1.6i 16v, 4WD Eng.G16B (68-69-70-71-72kW)	95-		R	L	**CF555**		Ø 22,20	
	95-		R	R	**CF554**		Ø 22,20	

SUZUKI LCV

Carry I (ST90V) Van 11/80-10/85								
0.8 Eng.F8A (27kW)	11/80-10/85		R	L	**CF565**	Nissin	Ø 22,20	Alu
	11/80-10/85		R	R	**CF566**	Nissin	Ø 22,20	Alu
Carry II (FD) Van 3/99-								
1.3 16v, 4WD Eng.G13BB (50-51-58-63-74kW)	99-		R	L	**CF464**	Nissin	Ø 19,05	Alu
	99-		R	R	**CF716**	Nissin	Ø 19,05	Alu
Super Carry II (ED) Bus 10/85-3/99								
1.0 Eng.F10A (30-31-33kW)	94-99		R	L	**CF288**		Ø 15,87	Alu
	85-99		R	L	**CF972**		Ø 19,05	Mod. SK410DA21T/V
	94-99		R	R	**CF289**		Ø 15,87	Alu
	85-99		R	R	**CF973**		Ø 19,05	Mod. SK410DA21T/V

TALBOT

1307-1510 7/75-4/84								
1.3 Simca 1307 Eng.371 (44kW)	75-80		R		**CF027**	Bdx	Ø 20,64	
	75-80		R		**CF030**	Luc	Ø 20,64	
1.3 Simca 1307 Eng.6G1 (50kW)	75-80		R		**CF027**	Bdx	Ø 20,64	
	75-80		R		**CF030**	Luc	Ø 20,64	
1.3 Simca 1307 Eng.6G1D (40kW)	78-81		R		**CF027**	Bdx	Ø 20,64	
	78-81		R		**CF030**	Luc	Ø 20,64	
1.3 Simca 1307 S Eng.1G4 (60kW)	75-78		R		**CF027**	Bdx	Ø 20,64	
	75-78		R		**CF030**	Luc	Ø 20,64	

TALBOT

		Spare Parts	F/R	L/R	FRITECH ref.		DIMENSIONS mm.	NOTE
1.4 Simca 1308 Eng.6G1 (51kW)	80-84		R		**CF027**	Bdx	Ø 20,64	
	80-84		R		**CF030**	Luc	Ø 20,64	
1.4 Simca 1308 Eng.6Y2 (63kW)	78-81		R		**CF027**	Bdx	Ø 20,64	
	78-81		R		**CF030**	Luc	Ø 20,64	
1.4 Simca 1308 Eng.6Y2/ 6Y2D (55kW)	80-81		R		**CF027**	Bdx	Ø 20,64	
	80-81		R		**CF030**	Luc	Ø 20,64	
1.6 Simca 1510 Eng.6J1 (54kW)	80-83		R		**CF533**	Ate	Ø 22,20	
	80-83		R		**CF020**	Bdx	Ø 22,00	
	80-83		R		**CF036**	Luc	Ø 22,00	
1.6 Simca 1510 Eng.6J2 (65kW)	78-80		R		**CF533**	Ate	Ø 22,20	
	78-80		R		**CF027**	Bdx	Ø 20,64	
	78-80		R		**CF030**	Luc	Ø 20,64	
1.6 Simca 1510 Eng.6J2A (66kW)	81-82		R		**CF533**	Ate	Ø 22,20	
	81-82		R		**CF020**	Bdx	Ø 22,00	
	81-82		R		**CF036**	Luc	Ø 22,00	
150 1/79-								
All models	79-80		R		**CF027**	Bdx	Ø 20,64	
	80-		R		**CF020**	Bdx	Ø 22,00	
	79-80		R		**CF030**	Luc	Ø 20,64	
	80-		R		**CF036**	Luc	Ø 22,00	
160 1/73-3/79								
1.6 Eng.7R2 (66kW)	7/76-		R		**CF603**	Bdx	Ø 22,00	
1.6 (59kW)	73-79		R		**CF603**	Bdx	Ø 22,00	
Alpine 1/75-								
1.3 (49kW)	4/80-		R		**CF533**	Ate	Ø 22,20	
	75-3/80		R		**CF027**	Bdx	Ø 20,64	
	4/80-		R		**CF020**	Bdx	Ø 22,00	
	75-3/80		R		**CF030**	Luc	Ø 20,64	
	4/80-		R		**CF036**	Luc	Ø 22,00	
1.5 (62kW)	4/80-		R		**CF533**	Ate	Ø 22,20	
	75-3/80		R		**CF027**	Bdx	Ø 20,64	
	4/80-		R		**CF020**	Bdx	Ø 22,00	
	75-3/80		R		**CF030**	Luc	Ø 20,64	
	4/80-		R		**CF036**	Luc	Ø 22,00	
1.6 Minx, Rapier (65kW)	80-85		R		**CF533**	Ate	Ø 22,20	
	80-85		R		**CF020**	Bdx	Ø 22,00	
	80-85		R		**CF036**	Luc	Ø 22,00	
Avenger 2/70-7/81								
1.25 Eng.NA (42kW)	70-		R		**CF359**		Ø 17,78	
1.3, SW Eng.JN/ JR (43-44kW)	70-		R		**CF359**		Ø 17,78	
1.5	70-		R		**CF359**		Ø 17,78	
1.6 Eng.SE16 (59-60kW)	70-		R		**CF359**		Ø 17,78	
1.6, SW Eng.NH (51-52kW)	70-		R		**CF359**		Ø 17,78	
Express 1/82-1/94								
1.8 Eng.XM7T (49-51kW)	1/82-12/82		R		**CF270**	Luc	Ø 22,22	1000, RHD
	1/83-90		R		**CF157**	Luc	Ø 25,40	1000, RHD
	1/82-90				**PF031**		Ø 22,20	RHD
1.9 D Eng.XUD9A (52-58kW)	1/82-12/82		R		**CF270**	Luc	Ø 22,22	1000, RHD
	1/83-94		R		**CF157**	Luc	Ø 25,40	1000, RHD
	1/82-94				**PF031**		Ø 22,20	RHD
2.0 Eng.170/ XN1TA (56kW)	1/82-12/82		R		**CF270**	Luc	Ø 22,22	1000, RHD
	1/83-94		R		**CF157**	Luc	Ø 25,40	1000, RHD
	86-94		R		**CF210**		Ø 26,99	1800, RHD
	1/83-94				**PF031**		Ø 22,20	RHD
2.5 D, TD Eng.CRD93 (54-68-70kW)	1/82-12/82		R		**CF270**	Luc	Ø 22,22	1000, RHD
	1/83-94		R		**CF157**	Luc	Ø 25,40	1000, RHD
	86-94		R		**CF210**		Ø 26,99	1800, RHD
	1/83-94				**PF031**		Ø 22,20	RHD
Horizon 2/78-6/86								
1.1 Eng.E1 (43-48kW)	79-84		R		**CF027**	Bdx	Ø 20,64	
	79-84		R		**CF030**	Luc	Ø 20,64	
	79-84				**PF089**		Ø 20,64	Isovac
1.1 Eng.E1B (40kW)	79-84		R		**CF027**	Bdx	Ø 20,64	
	79-84		R		**CF030**	Luc	Ø 20,64	

		Spare Parts	F/R	L/R	FRITECH ref.		DIMENSIONS mm.	NOTE
1.1 Eng.E1B (40kW)	79-84				**PF089**		Ø 20,64	Isovac
1.3 Eng.2G1 (50kW)	79-84		R		**CF027**	Bdx	Ø 20,64	
1.3 Eng.2G1-BTC (40-43kW)	79-84		R		**CF027**	Bdx	Ø 20,64	
	78-86		R		**CF030**	Luc	Ø 20,64	
	78-86				**PF089**		Ø 20,64	Isovac
1.3 Eng.G1/ G2 (47-50kW)	78-80		R		**CF027**	Bdx	Ø 20,64	
	78-80		R		**CF030**	Luc	Ø 20,64	
	78-80				**PF089**		Ø 20,64	Isovac
1.4 Eng.2Y1 (51kW)	79-86		R		**CF027**	Bdx	Ø 20,64	
	79-86		R		**CF030**	Luc	Ø 20,64	
	79-86				**PF089**		Ø 20,64	Isovac
1.4 Eng.2Y1B (48kW)	79-84		R		**CF027**	Bdx	Ø 20,64	
	82-84		R		**CF030**	Luc	Ø 20,64	
	82-84				**PF089**		Ø 20,64	Isovac
1.4 Eng.2Y2/ Y2 (61kW)	79-86		R		**CF027**	Bdx	Ø 20,64	
	79-86		R		**CF030**	Luc	Ø 20,64	
	79-86				**PF089**		Ø 20,64	Isovac
1.6 Eng.6J2A/ J2A (54-66kW)	79-84		R		**CF027**	Bdx	Ø 20,64	
	82-86		R		**CF030**	Luc	Ø 20,64	
	82-86				**PF089**		Ø 20,64	Isovac
1.9 D Eng.XUD9 (47-48kW)	79-84		R		**CF027**	Bdx	Ø 20,64	
	82-86		R		**CF030**	Luc	Ø 20,64	
	82-86				**PF089**		Ø 20,64	Isovac
Imp 1/66-1/76								
All models	66-76		R		**CF335**		Ø 19,05	Alu
Rancho 1/77-7/84								
1.4 Eng.X3Y2 (59kW)	77-80		R		**CF027**	Bdx	Ø 20,64	
	80-		R		**CF020**	Bdx	Ø 22,00	
	77-80		R		**CF030**	Luc	Ø 20,64	
	80-		R		**CF036**	Luc	Ø 22,00	
Samba (51A) 1/81-10/86								
0.9 Eng.5C1(XV5/ 8) (31kW)	81-85		R		**CF031**	Bdx	Ø 22,00	
	81-85		R		**CF056**	Luc	Ø 22,00	
	81-85				**PF082**		Ø 19,05	
1.1 Eng.XW7 (37kW)	81-86		R		**CF031**	Bdx	Ø 22,00	
	81-86		R		**CF056**	Luc	Ø 22,00	
	81-86				**PF082**		Ø 19,05	
1.2 Rallye Eng.129D/ XZ7R (65kW)	83-86		R		**CF031**	Bdx	Ø 22,00	
	83-86		R		**CF056**	Luc	Ø 22,00	
	83-86				**PF082**		Ø 19,05	
1.4 Eng.150D (44kW)	83-86		R		**CF031**	Bdx	Ø 22,00	
	83-86		R		**CF056**	Luc	Ø 22,00	
	83-86				**PF082**		Ø 19,05	
1.4 Eng.XY7/ XY8 (53kW)	81-86		R		**CF031**	Bdx	Ø 22,00	
	81-86		R		**CF056**	Luc	Ø 22,00	
	81-86				**PF082**		Ø 19,05	
1.4 Rallye, Cabrio Eng.XY8 (58-59kW)	83-86		R		**CF031**	Bdx	Ø 22,00	
	83-86		R		**CF056**	Luc	Ø 22,00	
	83-86				**PF082**		Ø 19,05	
Simca 10/61-12/80								
0.9 LE, LS (35kW)	76-80		R		**CF601**	Bdx	Ø 17,46	Exc. Sweden
	70-76		R		**CF338**	Bdx	Ø 19,05	Exc. Sweden
	76-80		R		**CF030**	Luc	Ø 20,64	
0.9 LS,GL,GLS Eng.349S (32kW)	61-75		F	L	**CF587**		Ø 22,00	
	61-75		F	R	**CF337**		Ø 22,00	
	61-75		R		**CF338**	Bdx	Ø 19,05	
0.9 LS,GLS Eng.1D1 (29kW)	76-78		R		**CF601**	Bdx	Ø 17,46	Exc. Sweden
	76-78		R		**CF030**	Luc	Ø 20,64	
1.1 Eng.350 (36-44kW)	61-69		F	L	**CF587**		Ø 22,00	
	61-69		F	R	**CF337**		Ø 22,00	
	61-69		R		**CF338**	Bdx	Ø 19,05	
	61-69		R		**CF027**	Bdx	Ø 20,64	

TALBOT

		Spare Parts	F/R	L/R	FRITECH ref.		DIMENSIONS mm.	NOTE
1.1 LE,LX,LS,GLS,ES, SW Eng.350/ 351/ 3E1A	76-80		R		**CF601**	Bdx	Ø 17,46	Exc. Sweden
(44kW)	76-80		R		**CF027**	Bdx	Ø 20,64	
	76-80		R		**CF030**	Luc	Ø 20,64	
1.1 LS,SR,GLS Eng.E1B (40kW)	76-78		R		**CF601**	Bdx	Ø 17,46	Exc. Sweden
	69-76		R		**CF338**	Bdx	Ø 19,05	Exc. Sweden
	68-78		R		**CF027**	Bdx	Ø 20,64	
	76-78		R		**CF030**	Luc	Ø 20,64	
1.1 Rallye, Spezial Eng.350S/ 351S (36-39kW)	7/69-75		R		**CF338**	Bdx	Ø 19,05	Exc. Sweden
	68-75		R		**CF027**	Bdx	Ø 20,64	
1.1, SW Eng.3E1 (37kW)	76-80		R		**CF601**	Bdx	Ø 17,46	Exc. Sweden
	76-80		R		**CF027**	Bdx	Ø 20,64	
	76-80		R		**CF030**	Luc	Ø 20,64	
1.2 (46kW)	7/69-72		R		**CF338**	Bdx	Ø 19,05	Exc. Sweden
1.2 S Coupe Eng.353S (63kW)	70-72		R		**CF338**	Bdx	Ø 19,05	Exc. Sweden
1.2 S Coupe Eng.354 (59kW)	7/69-72		R		**CF338**	Bdx	Ø 19,05	Exc. Sweden
1.2 Spezial Eng.353S (55-62kW)	7/76-77		R		**CF601**	Bdx	Ø 17,46	Exc. Sweden
	71-7/76		R		**CF338**	Bdx	Ø 19,05	Exc. Sweden
	7/76-77		R		**CF030**	Luc	Ø 20,64	
1.3 (38kW)	63-68		R		**CF027**	Bdx	Ø 20,64	
1.3 LS Eng.371 (44kW)	66-72		R		**CF027**	Bdx	Ø 20,64	
1.3 Rallye 2 Eng.1G4 (63kW)	76-77		F	L	**CF587**		Ø 22,00	6 CV
	76-77		F	R	**CF337**		Ø 22,00	6 CV
	76-77		R		**CF027**	Bdx	Ø 20,64	
1.3 Rallye 3 Eng.1G4 (76kW)	1/78-12/78		F	L	**CF587**		Ø 22,00	6 CV
	1/78-12/78		F	R	**CF337**		Ø 22,00	6 CV
	01/78-12/78		R		**CF027**	Bdx	Ø 20,64	
1.3 Spezial Eng.345S (51kW)	70-72		R		**CF027**	Bdx	Ø 20,64	Sweden
	70-72		R		**CF603**	Bdx	Ø 22,00	
	70-72		R		**CF030**	Luc	Ø 20,64	Sweden
1.3 Spezial Eng.6G1 (49kW)	73-76		R		**CF027**	Bdx	Ø 20,64	Sweden
	73-76		R		**CF603**	Bdx	Ø 22,00	
	73-76		R		**CF030**	Luc	Ø 20,64	Sweden
1.3 Spezial SW Eng.366 (55kW)	74-76		R		**CF027**	Bdx	Ø 20,64	
	74-76		R		**CF603**	Bdx	Ø 22,00	
1.3 Spezial TI, Rallye 2 Eng.3G4 (60kW)	72-77		R		**CF027**	Bdx	Ø 20,64	Sweden
	74-77		R		**CF603**	Bdx	Ø 22,00	
	74-77		R		**CF030**	Luc	Ø 20,64	Sweden
1.3 Spezial, LS,GL,GLS Eng.345/ S (40-44-51kW)	66-76		R		**CF027**	Bdx	Ø 20,64	
	74-76		R		**CF603**	Bdx	Ø 22,00	
1.3 Spezial, Rallye 1 Eng.1G1/ G2 (44-50kW)	74-77		R		**CF027**	Bdx	Ø 20,64	Sweden
	74-77		R		**CF603**	Bdx	Ø 22,00	
	74-77		R		**CF030**	Luc	Ø 20,64	Sweden
1.5 Spezial, SW (60kW)	70-72		R		**CF027**	Bdx	Ø 20,64	
1.5, Spezial, SW, Autom. Eng.Y1/ Y2 (51-52-53kW)	66-76		R		**CF027**	Bdx	Ø 20,64	
1.5, SW Eng.342 (49-50kW)	63-68		R		**CF027**	Bdx	Ø 20,64	
1.6 Eng.7R2 (66kW)	76-78		R		**CF027**	Bdx	Ø 20,64	
	10/76-		R		**CF603**	Bdx	Ø 22,00	
Simca Sunbeam 7/77-3/83								
0.9 Eng.CB (31kW)	77-		R		**CF359**		Ø 17,78	
1.3 Eng.F12E (43-44kW)	77-		R		**CF359**		Ø 17,78	
1.3 Eng.JB (40kW)	77-		R		**CF359**		Ø 17,78	
1.6 Eng.H16D (51kW)	77-		R		**CF359**		Ø 17,78	
1.6 Eng.TB (59kW)	78-		R		**CF359**		Ø 17,78	
1.6 Ti Eng.TB (74kW)	78-		R		**CF359**		Ø 17,78	
2.1 Lotus Eng.E (110-114kW)	79-		R		**CF359**		Ø 17,78	
Solara 2/80-7/86								
1.3 Eng.6G1D-VP (40kW)	2/80-86		R		**CF533**	Ate	Ø 22,20	
	2/80-7/80		R		**CF027**	Bdx	Ø 20,64	
	8/80-86		R		**CF020**	Bdx	Ø 22,00	
	2/80-7/80		R		**CF030**	Luc	Ø 20,64	
	8/80-86		R		**CF036**	Luc	Ø 22,00	
1.4 Eng.6Y1 (51kW)	82-84		R		**CF533**	Ate	Ø 22,20	
	82-84		R		**CF020**	Bdx	Ø 22,00	

TALBOT

		Spare Parts	F/R	L/R	FRITECH ref.		DIMENSIONS mm.	NOTE
1.4 Eng.6Y1 (51kW)	82-84		R		**CF036**	Luc	Ø 22,00	
1.6 Eng.6J1 (54kW)	81-84		R		**CF533**	Ate	Ø 22,20	
	81-84		R		**CF020**	Bdx	Ø 22,00	
	81-84		R		**CF036**	Luc	Ø 22,00	
1.6 Eng.6J2 (65kW)	2/80-81		R		**CF533**	Ate	Ø 22,20	
	2/80-7/80		R		**CF027**	Bdx	Ø 20,64	
	8/80-81		R		**CF020**	Bdx	Ø 22,00	
	2/80-7/80		R		**CF030**	Luc	Ø 20,64	
	8/80-81		R		**CF036**	Luc	Ø 22,00	
Tagora 6/80-12/87								
2.1 Eng.5N2 (85kW)	80-83		R		**CF530**	Bdx	Ø 20,64	
	80-83		R		**CF104**	Luc	Ø 20,64	
2.3 TD Eng.XD2S (59kW)	81-83		R		**CF530**	Bdx	Ø 20,64	
	81-83		R		**CF104**	Luc	Ø 20,64	
2.6 Eng.9L6 (122kW)	81-83		R		**CF530**	Bdx	Ø 20,64	
	81-83		R		**CF104**	Luc	Ø 20,64	

TATA

Indigo, SW 1/03-								
1.4 Eng.475MPFI (63kW)	03-		R	L	**CF543**	Gir	Ø 17,46	Alu
	03-		R	R	**CF544**	Gir	Ø 17,46	Alu
1.4 D Eng.475DL (46kW)	03-		R	L	**CF543**	Gir	Ø 17,46	Alu
	03-		R	R	**CF544**	Gir	Ø 17,46	Alu

TOYOTA

4 Runner I (N6) 1/84-1/88								
All models	84-85		R		**CF500**		Ø 19,05	
4 Runner II (N13) 8/87-3/96								
2.2 (YN135) Eng.4Y/ 4YEC (72kW)	89-91		R		**CF510**		Ø 22,20	
2.4 TD (LN130) (80-82kW)	89-95		R		**CF510**		Ø 22,20	
2.8 D (LN130) Eng.3L (66kW)	89-95		R		**CF510**		Ø 22,20	
4 Runner III (N18) 11/95-12/02								
2.7, 4WD Eng.3RZFE (112kW)	95-		R		**CF557**		Ø 23,81	15Inch Wheels
3.0 TD Eng.1KZT (92kW)	95-		R		**CF557**		Ø 23,81	15Inch Wheels
3.4 i 24v Eng.5VZFE (131-136kW)	95-		R		**CF557**		Ø 23,81	15Inch Wheels
Auris I (ZZE15) 4/07-12/12								
1.3 VVTi Eng.1NRFE (74kW)	09-				**PF967**	Bch	Ø 22,20	Alu, Vehicle +Start-stop, +ESP
	09-				**PF966**	Bch	Ø 22,20	Alu, Vehicle -Start-stop
1.4 Eng.4ZZFE (71-74kW)	07-3/09				**PF967**	Bch	Ø 22,20	Alu, +ESP
	07-3/09				**PF966**	Bch	Ø 22,20	Alu, -ESP
	07-				**CZ133**	Aisin	Ø 20,64	
1.4 D-4D Eng.1NDTV (66kW)	07-				**PF967**	Bch	Ø 22,20	Alu, Made in UK - Turkey, +ESP
	4/08-				**PF969**	Bch	Ø 22,20	Alu, +ESP
	07-				**PF966**	Bch	Ø 22,20	Alu, -ESP
1.6 Eng.1ZRFAE (97kW)	09-				**PF967**	Bch	Ø 22,20	Alu, Made in UK - Turkey, +ESP
1.6 Eng.1ZRFE (91kW)	07-				**PF967**	Bch	Ø 22,20	Alu, +ESP
	07-				**PF966**	Bch	Ø 22,20	Alu, -ESP
1.8 Eng.2ZRFAE (106-108kW)	09-				**PF967**	Bch	Ø 22,20	Alu, +ESP
	09-				**PF966**	Bch	Ø 22,20	Alu, -ESP
2.0 D-4D Eng.1ADFTV (93kW)	07-				**PF967**	Bch	Ø 22,20	Alu, +ESP
	07-				**PF966**	Bch	Ø 22,20	Alu, -ESP
2.2 D Eng.2ADFHV (130kW)	07-				**PF967**	Bch	Ø 22,20	Alu, Made in UK - Turkey, +ESP
	07-				**PF969**	Bch	Ø 22,20	Alu
Avensis I (T22), SW 9/97-3/03								
1.6 (AT220) Eng.4AFE (66-70-74-78-81-85kW)	97-10/00		R	L	**CF577**	Luc	Ø 20,64	Alu
	97-10/00		R	R	**CF578**	Luc	Ø 20,64	Alu
	97-00				**CZ126**		Ø 20,64	
1.6 VVT-i Eng.3ZZFE (81kW)	00-03		R	L	**CF577**	Luc	Ø 20,64	Alu
	00-03		R	R	**CF578**	Luc	Ø 20,64	Alu
	00-03				**PF613**	Ate	Ø 23,81	Alu
	00-03				**CZ133**	Aisin	Ø 20,64	
1.8 16v (AT221) Eng.7AFE (79-81-85-86kW)	97-10/00		R	L	**CF577**	Luc	Ø 20,64	Alu
	97-10/00		R	R	**CF578**	Luc	Ø 20,64	Alu
	97-00				**CZ126**		Ø 20,64	

TOYOTA

		Spare Parts	F/R	L/R	FRITECH ref.		DIMENSIONS mm.	NOTE
1.8 16v VVTi Eng.1ZZFE (92-95-99-103kW)	00-03		R	L	**CF577**	Luc	Ø 20,64	Alu
	00-03		R	R	**CF578**	Luc	Ø 20,64	Alu
	00-03				**PF613**	Ate	Ø 23,81	Alu
	00-03				**CZ133**	Aisin	Ø 20,64	
2.0 16v (ST220) Eng.3SFE (90-95-98kW)	97-10/00		R	L	**CF577**	Luc	Ø 20,64	Alu
	97-10/00		R	R	**CF578**	Luc	Ø 20,64	Alu
	97-00				**CZ126**		Ø 20,64	
2.0 D4-D Eng.1CDFTV (85kW)	02-03				**PF613**	Ate	Ø 23,81	Alu
2.0 D-4D Eng.1CDFTV (81kW)	99-03		R	L	**CF577**	Luc	Ø 20,64	Alu
	99-03		R	R	**CF578**	Luc	Ø 20,64	Alu
	00-03				**PF613**	Ate	Ø 23,81	Alu
2.0 TD (CT220) Eng.2CTE (66kW)	97-03		R	L	**CF577**	Luc	Ø 20,64	Alu
	97-03		R	R	**CF578**	Luc	Ø 20,64	Alu
2.0 VVT-i Eng.1AZFE/ FSE (110kW)	00-03				**PF613**	Ate	Ø 23,81	Alu
Avensis II (T25), SW 4/03-1/09								
1.6 VVT-i Eng.3ZZFE (81kW)	03-09				**PF790**	Bch	Ø 23,81	Alu, +ESP
	03-09				**PF789**	Bch	Ø 23,81	Alu, 2 Connections, -ESP
	03-09				**PF962**	Bch	Ø 23,81	Alu, 4 Connection, -ESP
1.8 16v VVTi Eng.1ZZFE (95kW)	03-09				**PF790**	Bch	Ø 23,81	Alu, +ESP
	03-09				**PF789**	Bch	Ø 23,81	Alu, 2 Connections, -ESP
	03-09				**PF962**	Bch	Ø 23,81	Alu, 4 Connection, -ESP
2.0 Eng.1AZFSE (108kW)	03-09				**PF790**	Bch	Ø 23,81	Alu, +ESP
	03-09				**PF789**	Bch	Ø 23,81	Alu, 2 Connections, -ESP
	03-09				**PF962**	Bch	Ø 23,81	Alu, 4 Connection, -ESP
2.0 D-4D Eng.1CDFTV (85kW)	03-09		R		**CF798**		Ø 19,05	Alu
	03-09				**PF790**	Bch	Ø 23,81	Alu, +ESP
	03-09				**PF789**	Bch	Ø 23,81	Alu, 2 Connections, -ESP
	03-09				**PF962**	Bch	Ø 23,81	Alu, 4 Connection, -ESP
2.2 D-4D Eng.2ADFTV (110kW)	05-09				**PF790**	Bch	Ø 23,81	Alu, +ESP
2.4 Eng.2AZFSE (120kW)	03-09				**PF790**	Bch	Ø 23,81	Alu, +ESP
	03-09				**PF789**	Bch	Ø 23,81	Alu, 2 Connections, -ESP
	03-09				**PF962**	Bch	Ø 23,81	Alu, 4 Connection, -ESP
2.4 Eng.2AZFSE (125kW)	03-09				**PF790**	Bch	Ø 23,81	Alu, +ESP
	03-09				**PF789**	Bch	Ø 23,81	Alu, 2 Connections, -ESP
	03-09				**PF962**	Bch	Ø 23,81	Alu, 4 Connection, -ESP
Avensis III (T27), SW 2/09-								
1.6 Eng.1ZRFAE (97kW)	09-				**PF970**	Bch	Ø 23,81	Alu, M/T
1.8 Eng.2ZRFAE (108kW)	09-				**PF970**	Bch	Ø 23,81	Alu, M/T+A/T
2.0 Eng.3ZRFAE (112kW)	09-				**PF970**	Bch	Ø 23,81	Alu, M/T+A/T
2.0 D Eng.1ADFTV (93kW)	09-				**PF970**	Bch	Ø 23,81	Alu, M/T
2.0 D-4D Eng.1ADFTV (91kW)	12-				**PF970**	Bch	Ø 23,81	Alu, M/T
2.2 D Eng.2ADFHV (130kW)	09-				**PF970**	Bch	Ø 23,81	Alu, M/T
2.2 D Eng.2ADFTV (110kW)	09-				**PF970**	Bch	Ø 23,81	Alu, M/T
Avensis Verso (M20) 8/01-12/09								
2.0 D4-D Eng.1CDFTV (85kW)	01-				**PF643**		Ø 20,64	Alu
2.0 VVT-i Eng.1AZFE/ FSE (110kW)	01-				**PF643**		Ø 20,64	Alu
Aygo I (KGB,WNB) 10/05-4/14								
1.0 VVT-i Eng.1KRFE (50kW)	05-		R		**CF802**	Bch	Ø 17,46	Alu
	05-				**PF853**	Bch	Ø 20,64	Alu, -ESP
	05-				**PF794**		Ø 20,64	Alu, +ESP
1.4 HDi Eng.DV4D (40kW)	05-		R		**CF802**	Bch	Ø 17,46	Alu
	05-				**PF853**	Bch	Ø 20,64	Alu, -ESP
	05-				**PF794**		Ø 20,64	Alu, +ESP
Aygo II (PAB4,KGB4) 5/14-								
1.0 Eng.1KRFE (50kW)	14-		R		**CF1018**	Bch	Ø 17,46	Alu
Camry (V1)/ Vista/ Scepter 2/83-9/86								
1.8 Eng.1SL (66-74kW)	83-86		R	L	**CF213**		Ø 19,05	Exc. SW
	83-86		R	R	**CF212**		Ø 19,05	Exc. SW
1.8 TD Eng.1CTL (48-54kW)	83-86		R	L	**CF213**		Ø 19,05	Exc. SW
	83-88		R	R	**CF212**		Ø 19,05	Exc. SW
2.0 Eng.2SE/ 2SELC (73kW)	83-86		R	L	**CF213**		Ø 19,05	Exc. SW
	83-86		R	R	**CF212**		Ø 19,05	Exc. SW
	86-88		R		**CF549**		Ø 20,64	South Africa

		Spare Parts	F/R	L/R	FRITECH ref.		DIMENSIONS mm.	NOTE
2.0 Eng.2SEL (79kW)	83-86		R	L	**CF213**		Ø 19,05	Exc. SW
	83-86		R	R	**CF212**		Ø 19,05	Exc. SW
			R		**CF549**		Ø 20,64	South Africa
2.0 TD Eng.2CTL (61kW)	85-86		R		**CF290**		Ø 22,20	
2.2 (SXV10), SW Eng.5SFE (100kW)	91-92		R	L	**CF491**		Ø 20,64	
	91-92		R	R	**CF490**		Ø 20,64	
3.0 (VCV10), SW Eng.3VZFE (138kW)	91-92		R	L	**CF491**		Ø 20,64	
	91-92		R	R	**CF490**		Ø 20,64	
Camry (V2), SW 10/86-5/91								
1.8 i (SV20) Eng.1SL (66-74kW)	86-88		R	L	**CF213**		Ø 19,05	Exc. SW
	86-88		R	R	**CF212**		Ø 19,05	Exc. SW
2.0 16v, 4WD (SV21, SV25) Eng.3SFE	86-91		R	L	**CF213**		Ø 19,05	Exc. SW
(90-95-98kW)	86-91		R	L	**CF457**		Ø 19,05	
	86-91		R	R	**CF212**		Ø 19,05	Exc. SW
	86-91		R	R	**CF456**		Ø 19,05	
	86-				**CZ127**	Aisin	Ø 20,64	
2.0 GLI 16V Eng.2SE/2SELC (89kW)	86-88		R	L	**CF213**		Ø 19,05	Exc. SW
	83-86		R	R	**CF212**		Ø 19,05	Exc. SW
	86-88		R		**CF549**		Ø 20,64	South Africa
2.0 TD (CV20) Eng.2CT (62-63kW)	86-91		R	L	**CF457**		Ø 19,05	
	86-91		R	R	**CF456**		Ø 19,05	
2.5 V6 GXI (VZV21) Eng.2VZFE (118kW)	88-91		R	L	**CF213**		Ø 19,05	Exc. SW
	88-91		R	R	**CF212**		Ø 19,05	Exc. SW
Carina I (TA4, TA6), SW 8/77-2/87								
1.6, LT Coupe Eng.2T (55kW)	78-8/83		R		**CF345**		Ø 19,05	Front Disc Brake
	80-1/82		R		**CF346**		Ø 20,64	
1.8 Eng.3TC (57kW)	78-83		R		**CF345**		Ø 19,05	Front Disc Brake
Carina II (T15) 10/83-11/87								
1.6 (AT151) Eng.4AL (62-63kW)	1/87-11/87		R	L	**CF215**		Ø 17,46	
	83-87		R	L	**CF213**		Ø 19,05	
	1/87-11/87		R	R	**CF214**		Ø 17,46	
	83-87		R	R	**CF212**		Ø 19,05	
1.6 (AT151) Eng.4ALC (55-89kW)	1/87-11/87		R	L	**CF215**		Ø 17,46	
	83-87		R	L	**CF213**		Ø 19,05	
	1/87-11/87		R	R	**CF214**		Ø 17,46	
	83-87		R	R	**CF212**		Ø 19,05	
1.8 GLI (ST150) Eng.1SL (74kW)	1/87-11/87		R	L	**CF215**		Ø 17,46	
	83-87		R	L	**CF213**		Ø 19,05	
	1/87-11/87		R	R	**CF214**		Ø 17,46	
	83-87		R	R	**CF212**		Ø 19,05	
2.0 D (CT150) Eng.2C/ L (50-51-53kW)	1/87-12/87		R	L	**CF215**		Ø 17,46	
	85-87		R	L	**CF213**		Ø 19,05	
	1/87-12/87		R	R	**CF214**		Ø 17,46	
	85-87		R	R	**CF212**		Ø 19,05	
Carina II (T17), SW 12/87-6/93								
1.6 (AT171) Eng.4AF (66kW)	87-89		R	L	**CF213**		Ø 19,05	
	87-89		R	R	**CF212**		Ø 19,05	
	87-89				**CZ126**		Ø 20,64	
1.6 (AT171) Eng.4AFE (72-75kW)	87-92		R	L	**CF213**		Ø 19,05	
	87-92		R	R	**CF212**		Ø 19,05	
	87-92				**CZ126**		Ø 20,64	
2.0 D Eng.2C/ L (53-54kW)	88-93		R	L	**CF213**		Ø 19,05	
	88-93		R	R	**CF212**		Ø 19,05	
2.0 GLI (ST171) Eng.3SFE (90-95-98kW)	87-92		R	L	**CF213**		Ø 19,05	
	87-92		R	R	**CF212**		Ø 19,05	
	87-				**CZ127**	Aisin	Ø 20,64	
Carina III E (T19), SW 4/92-9/97								
1.6 (AT190) Eng.4AFE (73-85kW)	93-97		R	L	**CF313**	Hosei	Ø 19,05	
	93-97		R	L	**CF249**	Luc	Ø 19,05	Alu, U.K.
	93-97		R	L	**CF646**	Luc	Ø 20,64	Alu
	93-97		R	R	**CF314**	Hosei	Ø 19,05	
	93-97		R	R	**CF248**	Luc	Ø 19,05	Alu, U.K.
	93-97		R	R	**CF647**	Luc	Ø 20,64	Alu
	93-97				**CZ126**		Ø 20,64	

TOYOTA

		Spare Parts	F/R	L/R	FRITECH ref.		DIMENSIONS mm.	NOTE
1.6 16v (AT190) (Exc. SW) Eng.4AFE (78kW)	93-97		R	L	**CF313**	Hosei	Ø 19,05	
	93-97		R	L	**CF249**	Luc	Ø 19,05	Alu, U.K.
	93-97		R	L	**CF646**	Luc	Ø 20,64	Alu
	93-97		R	R	**CF314**	Hosei	Ø 19,05	
	93-97		R	R	**CF248**	Luc	Ø 19,05	Alu, U.K.
	93-97		R	R	**CF647**	Luc	Ø 20,64	Alu
	93-97				**CZ126**		Ø 20,64	
1.6 GLi (Exc. SW) Eng.4AFE (79kW)	95-97		R	L	**CF313**	Hosei	Ø 19,05	
	95-97		R	L	**CF249**	Luc	Ø 19,05	Alu, U.K.
	95-97		R	L	**CF646**	Luc	Ø 20,64	Alu
	95-97		R	R	**CF314**	Hosei	Ø 19,05	
	95-97		R	R	**CF248**	Luc	Ø 19,05	Alu, U.K.
	95-97		R	R	**CF647**	Luc	Ø 20,64	Alu
	95-97				**CZ126**		Ø 20,64	
1.8 16v (AT191) Eng.7AFE (79-81-85-86kW)	95-97		R	L	**CF313**	Hosei	Ø 19,05	
	95-97		R	L	**CF249**	Luc	Ø 19,05	Alu, U.K.
	95-97		R	L	**CF646**	Luc	Ø 20,64	Alu
	95-97		R	R	**CF314**	Hosei	Ø 19,05	
	95-97		R	R	**CF248**	Luc	Ø 19,05	Alu, U.K.
	95-97		R	R	**CF647**	Luc	Ø 20,64	Alu
	95-97				**CZ126**		Ø 20,64	
2.0 16v (ST191) Eng.3SFE (93kW)	93-97		R	L	**CF313**	Hosei	Ø 19,05	
	93-97		R	L	**CF249**	Luc	Ø 19,05	Alu, U.K.
	93-97		R	L	**CF646**	Luc	Ø 20,64	Alu
	93-97		R	R	**CF314**	Hosei	Ø 19,05	
	93-97		R	R	**CF248**	Luc	Ø 19,05	Alu, U.K.
	93-97		R	R	**CF647**	Luc	Ø 20,64	Alu
2.0 D (CT190) Eng.2C (53kW)	92-96		R	L	**CF313**	Hosei	Ø 19,05	
	92-96		R	L	**CF249**	Luc	Ø 19,05	Alu, U.K.
	92-96		R	L	**CF646**	Luc	Ø 20,64	Alu
	92-96		R	R	**CF314**	Hosei	Ø 19,05	
	92-96		R	R	**CF248**	Luc	Ø 19,05	Alu, U.K.
	92-96		R	R	**CF647**	Luc	Ø 20,64	Alu
2.0 GLI (ST191) Eng.3SFE (90-95-98kW)	92-97		R	L	**CF313**	Hosei	Ø 19,05	
	92-97		R	L	**CF249**	Luc	Ø 19,05	Alu, U.K.
	92-97		R	L	**CF646**	Luc	Ø 20,64	Alu
	92-97		R	R	**CF314**	Hosei	Ø 19,05	
	92-97		R	R	**CF248**	Luc	Ø 19,05	Alu, U.K.
	92-97		R	R	**CF647**	Luc	Ø 20,64	Alu
	92-97				**CZ127**	Aisin	Ø 20,64	
2.0 TD (CT190) Eng.2CT (61-62kW)	96-97		R	L	**CF313**	Hosei	Ø 19,05	
	96-97		R	L	**CF249**	Luc	Ø 19,05	Alu, U.K.
	96-97		R	L	**CF646**	Luc	Ø 20,64	Alu
	96-97		R	R	**CF314**	Hosei	Ø 19,05	
	96-97		R	R	**CF248**	Luc	Ø 19,05	Alu, U.K.
	96-97		R	R	**CF647**	Luc	Ø 20,64	Alu
	96-97				**CZ126**		Ø 20,64	
Celica I (TA2) 5/73-3/78								
1.6 (TA2) Eng.2T (55kW)	76-78		R		**CF644**		Ø 20,64	Supra
1.6 GT (TA2, TA22) Eng.2TG (79kW)	74-78		R		**CF644**		Ø 20,64	Supra
1.6 LT (TA22) Eng.2TJ (58kW)	73-78		R		**CF644**		Ø 20,64	Supra
1.6 ST (TA2, TA22) Eng.2TB (55-63kW)	73-78		R		**CF644**		Ø 20,64	Supra
2.0 Eng.18R (63kW)	75-77		R		**CF644**		Ø 20,64	Supra
	75-77				**CZ126**		Ø 20,64	
2.2 Eng.20R (71-81kW)	75-77		R		**CF644**		Ø 20,64	Supra
Celica II (TA60, RA40, RA6) 8/77-10/86								
1.6 GT 16v Coupe Eng.4AGE (91kW)	83-86		R		**CF345**		Ø 19,05	
	83-86		R		**CF346**		Ø 20,64	RA
1.6 ST (TA60) Eng.2TB (63-66-80kW)	77-80		R		**CF345**		Ø 19,05	
2.0 Coupe, XT Eng.21R/ 21RC (77kW)	82-86		R		**CF346**		Ø 20,64	
	82-86		R		**CF431**		Ø 22,20	
2.0 GT (RA63) Eng.18RG (87-90kW)	78-80		R		**CF345**		Ø 19,05	
2.0 XT (RA40) Eng.18R (65-66kW)	80-82		R		**CF345**		Ø 19,05	

		Spare Parts	F/R	L/R	FRITECH ref.		DIMENSIONS mm.	NOTE
Celica III (T16) 8/85-8/90								
1.6 Eng.4AL (63kW)	86-90		R	L	**CF213**		Ø 19,05	
	86-90		R	R	**CF212**		Ø 19,05	
1.6 GT Eng.4AGELC (85-89kW)	87-89		R	L	**CF213**		Ø 19,05	
	87-89		R	R	**CF212**		Ø 19,05	
1.6 GT 16v Eng.4AGEL (91kW)	85-89		R	L	**CF213**		Ø 19,05	
	85-89		R	R	**CF212**		Ø 19,05	
2.0 T. 4WD Coupe Eng.3SGTE (136kW)	88-				**CZ127**	Aisin	Ø 20,64	
Celica IV (T18) 10/89-1/94								
1.6 STI (AT180) Coupe Eng.4AFE	89-94		R	L	**CF213**		Ø 19,05	+ABS
(66-70-74-78-81-85kW)	89-94		R	R	**CF212**		Ø 19,05	+ABS
	-11/93				**CZ126**		Ø 20,64	
2.0 GTi (ST182) Coupe, Cabrio Eng.3SGE	89-94		R	L	**CF213**		Ø 19,05	+ABS
(115-118kW)	89-94		R	R	**CF212**		Ø 19,05	+ABS
Celica V (T20) 11/93-11/99								
1.8 16v (AT200/ST) Eng.7AFE (79-81-85-86kW)	93-99				**CZ126**		Ø 20,64	
Condor 1/00-								
1.8	00-		R		**CF966**		Ø 22,20	South Africa
2.0	03-		R		**CF966**		Ø 22,20	South Africa
2.4	00-		R		**CF966**		Ø 22,20	South Africa
3.0 D	00-		R		**CF966**		Ø 22,20	South Africa
Conquest 1/84-								
All models	84-		R		**CF758**		Ø 19,05	South Africa
Corolla I (KE, TE) 11/66-12/80								
1.2, Coupe, SW Eng.3KB/ C/ H (40-43kW)	8/74-1/77		R		**CF345**		Ø 19,05	Exc. Europe
	8/74-1/77		R		**CF346**		Ø 20,64	Europe
1.6 LiftB. Eng.2T (55kW)	76-80		R		**CF346**		Ø 20,64	
1.6 LiftB. Eng.2TB (62kW)	76-80		R		**CF346**		Ø 20,64	
Corolla II (E7) 9/79-9/83								
1.3 (KE70), SW, LiftB. Eng.4KC (43-48kW)	82-83		R		**CF412**		Ø 20,64	
1.6 (TE71) LiftB. Eng.2TB (63kW)	79-83		R		**CF346**		Ø 20,64	Front Disc Brake
1.6 (TE71), LiftB. Eng.2T (55kW)	79-83		R		**CF346**		Ø 20,64	Front Disc Brake
1.6 GT (TE71) LiftB. Eng.2TG (81kW)	80-83		R		**CF345**		Ø 19,05	Front Drum Brake
1.8 (TE72) LiftB. Eng.3TC (57kW)	79-82		R		**CF345**		Ø 19,05	Front Drum Brake, Sweden/Switzerland
1.8 D (CE70), SW Eng.1C (43-48kW)	1/83-9/83		R		**CF346**		Ø 20,64	Front Disc Brake
Corolla III (E8) 5/83-5/88								
1.3 (AE80), LiftB. Eng.2AL (51kW)	83-12/84		R	L	**CF213**		Ø 19,05	
	83-12/84		R	R	**CF212**		Ø 19,05	
	83-12/84		R		**CF412**		Ø 20,64	Sedan
1.3 (AE80/EE80), LiftB., Compact FX Eng.2EL/	86-87		R	L	**CF215**		Ø 17,46	
2ELC (55-68kW)	84-12/85		R	L	**CF213**		Ø 19,05	
	86-87		R	R	**CF214**		Ø 17,46	
	84-12/85		R	R	**CF212**		Ø 19,05	
	84-87		R		**CF412**		Ø 20,64	Sedan
1.6 (AE82), LiftB. Eng.4AL (62kW)	1/86-87		R	L	**CF215**		Ø 17,46	
	83-12/85		R	L	**CF213**		Ø 19,05	
	1/86-87		R	R	**CF214**		Ø 17,46	
	83-12/85		R	R	**CF212**		Ø 19,05	
	83-12/84		R		**CF412**		Ø 20,64	Sedan
1.6 (AE82), LiftB., Compact FX Eng.4ALC	86-88		R	L	**CF215**		Ø 17,46	
(53-58kW)	8/85-12/85		R	L	**CF213**		Ø 19,05	
	86-88		R	R	**CF214**		Ø 17,46	
	8/85-12/85		R	R	**CF212**		Ø 19,05	
1.6 Compact FX Eng.4AC (55-85-89-91kW)	1/86-87		R	L	**CF215**		Ø 17,46	
	83-12/85		R	L	**CF213**		Ø 19,05	
	1/86-87		R	R	**CF214**		Ø 17,46	
	83-12/85		R	R	**CF212**		Ø 19,05	
1.6 LiftB. Eng.4AL (63kW)	1/86-88		R	L	**CF215**		Ø 17,46	
	7/85-12/85		R	L	**CF213**		Ø 19,05	
	1/86-88		R	R	**CF214**		Ø 17,46	
	7/85-12/85		R	R	**CF212**		Ø 19,05	
1.8 D, LiftB., Compact FX Eng.1C (43kW)	83-88		R	L	**CF215**		Ø 17,46	
	83-12/85		R	L	**CF213**		Ø 19,05	
	83-88		R	R	**CF214**		Ø 17,46	

TOYOTA

		Spare Parts	F/R	L/R	FRITECH ref.		DIMENSIONS mm.	NOTE
1.8 D, LiftB., Compact FX Eng.1C (43kW)	83-12/85		R	R	**CF212**		Ø 19,05	
1.8 D, LiftB., Compact FX Eng.1CL (48kW)	83-88		R	L	**CF215**		Ø 17,46	
	83-12/85		R	L	**CF213**		Ø 19,05	
	83-88		R	R	**CF214**		Ø 17,46	
	83-12/85		R	R	**CF212**		Ø 19,05	
All models (South Africa)	83-88		R		**CF758**		Ø 19,05	South Africa
Corolla IV (E9), SW, Compact, Liftback 8/87-6/93								
1.3 12v (EE90) Eng.2E/ 2EE (55kW)	87-92		R	L	**CF313**	Hosei	Ø 19,05	
	87-92		R	L	**CF215**		Ø 17,46	
	87-92		R	L	**CF213**		Ø 19,05	Japan
	87-92		R	R	**CF314**	Hosei	Ø 19,05	
	87-92		R	R	**CF214**		Ø 17,46	
	87-92		R	R	**CF212**		Ø 19,05	Japan
	87-92				**PZ151**	Aisin	Ø 15,87	Alu
1.6 (AE92) Eng.4AF (66kW)	87-92		R	L	**CF313**	Hosei	Ø 19,05	
	87-92		R	L	**CF215**		Ø 17,46	
	87-92		R	L	**CF213**		Ø 19,05	Japan
	87-92		R	R	**CF314**	Hosei	Ø 19,05	
	87-92		R	R	**CF214**		Ø 17,46	
	87-92		R	R	**CF212**		Ø 19,05	Japan
	87-92		R		**CF273**		Ø 19,05	Japan, Mod. AE95
	87-92				**CZ126**		Ø 20,64	
1.6 (AE92) (Exc. Compact) Eng.4AF (70kW)	87-92		R	L	**CF215**		Ø 17,46	
	87-92		R	L	**CF213**		Ø 19,05	Japan
	87-92		R	R	**CF214**		Ø 17,46	
	87-92		R	R	**CF212**		Ø 19,05	Japan
	87-92		R		**CF273**		Ø 19,05	Japan, Mod. AE95
	87-92				**CZ126**		Ø 20,64	
1.6 GTi (AE92) (Exc. SW) Eng.4AGE	87-93		R	L	**CF215**		Ø 17,46	
(85-89-92-95kW)	87-93		R	R	**CF214**		Ø 17,46	
	87-93				**CZ126**		Ø 20,64	
1.6i, 4WD Eng.4AFE (74-78-81kW)	87-93		R	L	**CF313**	Hosei	Ø 19,05	
	87-93		R	L	**CF215**		Ø 17,46	
	87-92		R	L	**CF213**		Ø 19,05	Japan
	87-93		R	R	**CF314**	Hosei	Ø 19,05	
	87-93		R	R	**CF214**		Ø 17,46	
	87-92		R	R	**CF212**		Ø 19,05	Japan
	87-93		R		**CF273**		Ø 19,05	Japan, Mod. AE95
	87-93				**CZ126**		Ø 20,64	
	88-92				**PZ151**	Aisin	Ø 15,87	Alu
	89-92				**PZ151**	Aisin	Ø 15,87	Alu
1.8 D (CE90) Eng.1C (47-48kW)	87-93		R	L	**CF313**	Hosei	Ø 19,05	
	87-93		R	L	**CF215**		Ø 17,46	
	87-92		R	L	**CF213**		Ø 19,05	Japan
	87-93		R	R	**CF314**	Hosei	Ø 19,05	
	87-93		R	R	**CF214**		Ø 17,46	
	87-92		R	R	**CF212**		Ø 19,05	Japan
	89-92				**PZ151**	Aisin	Ø 15,87	Alu
Corolla V (E10), SW, Compact, Liftback 7/92-4/97								
1.3 12v (EE100) Eng.2E (53-68kW)	92-97		R	L	**CF313**	Hosei	Ø 19,05	
	92-97		R	L	**CF806**	Tokiko	Ø 17,46	
	92-97		R	R	**CF314**	Hosei	Ø 19,05	
	92-97		R	R	**CF807**	Tokiko	Ø 17,46	
	92-95				**PF977**		Ø 22,20	Alu, +ABS
	92-95				**PZ151**	Aisin	Ø 15,87	Alu
	92-97				**PZ151**	Aisin	Ø 15,87	Alu
1.3 XLI (EE101) Eng.4EFE (55kW)	95-97		R	L	**CF313**	Hosei	Ø 19,05	
	95-97		R	R	**CF314**	Hosei	Ø 19,05	
	95-97				**PZ151**	Aisin	Ø 15,87	Alu
1.3 XLI 16v (EE101) Eng.4EFE (65kW)	92-97		R	L	**CF313**	Hosei	Ø 19,05	
	92-97		R	R	**CF314**	Hosei	Ø 19,05	
	92-95				**PF977**		Ø 22,20	Alu, +ABS
	92-95				**PZ151**	Aisin	Ø 15,87	Alu

		Spare Parts	F/R	L/R	FRITECH ref.		DIMENSIONS mm.	NOTE
1.6 Si, GLi (AE101) Eng.4AFE	92-97		R	L	**CF313**	Hosei	Ø 19,05	
(66-70-74-76-78-81-85kW)	92-97		R	R	**CF314**	Hosei	Ø 19,05	
	92-97				**PF977**		Ø 22,20	Alu, +ABS
	92-				**CZ127**	Aisin	Ø 20,64	
	92-97				**CZ126**		Ø 20,64	
	92-97				**PZ151**	Aisin	Ø 15,87	Alu
	92-97				**PZ151**	Aisin	Ø 15,87	Alu
1.8 16v 4WD, GT (AE102, 103) Eng.7AFE	92-97		R	L	**CF313**	Hosei	Ø 19,05	
(79-81-85-86-88kW)	92-97		R	R	**CF314**	Hosei	Ø 19,05	
2.0 D (CE100) Eng.2C (53kW)	92-97		R	L	**CF313**	Hosei	Ø 19,05	
	92-97		R	R	**CF314**	Hosei	Ø 19,05	
	92-97				**PF977**		Ø 22,20	Alu, +ABS
	92-97				**PZ151**	Aisin	Ø 15,87	Alu
Corolla VI (E11), SW, Compact, Liftback 4/97-1/02								
1.4 (EE111) Eng.4EFE (63kW)	97-00		R	L	**CF313**	Hosei	Ø 19,05	
	97-00		R	L	**CF841**		Ø 19,05	Alu, Made in UK
	97-00		R	R	**CF314**	Hosei	Ø 19,05	
	97-00		R	R	**CF840**		Ø 19,05	Alu, Made in UK
	97-00				**PF815**	Aisin	Ø 22,20	Alu, +ABS
	97-				**PZ151**	Aisin	Ø 15,87	Alu
1.4 16v (ZZE111) Eng.4ZZFE (71kW)	00-02		R	L	**CF313**	Hosei	Ø 19,05	
	00-02		R	L	**CF841**		Ø 19,05	Alu, Made in UK
	00-02		R	R	**CF314**	Hosei	Ø 19,05	
	00-02		R	R	**CF840**		Ø 19,05	Alu, Made in UK
	00-				**PZ151**	Aisin	Ø 15,87	Alu
1.6 (AE111) Eng.4AFE (81kW)	97-00		R	L	**CF313**	Hosei	Ø 19,05	
	97-00		R	L	**CF841**		Ø 19,05	Alu, Made in UK
	97-00		R	R	**CF314**	Hosei	Ø 19,05	
	97-00		R	R	**CF840**		Ø 19,05	Alu, Made in UK
	97-00				**PF815**	Aisin	Ø 22,20	Alu, +ABS
	97-00				**CZ126**		Ø 20,64	
1.6 16v Eng.3ZZFE (81kW)	00-02		R	L	**CF313**	Hosei	Ø 19,05	
	00-02		R	R	**CF314**	Hosei	Ø 19,05	
	00-02				**CZ126**		Ø 20,64	
	00-				**PZ151**	Aisin	Ø 15,87	Alu
1.6 Aut. (AE111) Eng.4AFE (79kW)	97-00		R	L	**CF313**	Hosei	Ø 19,05	
	97-00		R	L	**CF841**		Ø 19,05	Alu, Made in UK
	97-00		R	R	**CF314**	Hosei	Ø 19,05	
	97-00		R	R	**CF840**		Ø 19,05	Alu, Made in UK
	97-00				**PF815**	Aisin	Ø 22,20	Alu, +ABS
1.8, AWD (AE115) (Only SW) Eng.7AFE (79-81-85-86kW)	97-02				**CZ126**		Ø 20,64	
1.9 D (WZE110) Eng.1WZ (51kW)	00-02		R	L	**CF313**	Hosei	Ø 19,05	
	00-02		R	R	**CF314**	Hosei	Ø 19,05	
	-11/01				**PZ151**	Aisin	Ø 15,87	Alu
2.0 D (CE110) Eng.2CE (53kW)	97-00		R	L	**CF313**	Hosei	Ø 19,05	
	97-00		R	L	**CF841**		Ø 19,05	Alu, Made in UK
	97-00		R	R	**CF314**	Hosei	Ø 19,05	
	97-00		R	R	**CF840**		Ø 19,05	Alu, Made in UK
	97-00				**PF815**	Aisin	Ø 22,20	Alu, +ABS
	97-00				**PZ151**	Aisin	Ø 15,87	Alu
2.0 D-4D Eng.1CDFTV (66kW)	00-02				**PF936**	Trw	Ø 20,64	Alu, +ESP, RHD
	00-				**PZ151**	Aisin	Ø 15,87	Alu
Corolla VII (E12) Verso 1/02-5/04								
1.4 VVT-i Eng.4ZZFE (71kW)	02-04				**PF814**	Aisin	Ø 20,64	Alu, Made in Japan
	02-04				**CZ133**	Aisin	Ø 20,64	Made in UK
1.6 VVT-i Eng.3ZZFE (81kW)	02-04				**PF814**	Aisin	Ø 20,64	Alu, M/T+A/T
	02-04				**CZ133**	Aisin	Ø 20,64	
1.8 16v VVTi Eng.1ZZFE (99kW)	02-04				**PF814**	Aisin	Ø 20,64	Alu
2.0 D-4D Eng.1CDFTV (66kW)	02-04				**PF814**	Aisin	Ø 20,64	Alu
	02-04				**CZ133**	Aisin	Ø 20,64	Made in UK
Corolla VII (E12, E15), SW 1/02-12/13								
1.4 D-4D Eng.1NDTV (66kW)	09-				**PF969**	Bch	Ø 22,20	Alu, +ESP
	4/08-				**PF968**	Bch	Ø 22,20	Alu, -ESP

TOYOTA

		Spare Parts	F/R	L/R	FRITECH ref.		DIMENSIONS mm.	NOTE
1.4 D-4D Eng.1NDTV (66kW)	7/04-				**PF817**	Trw	Ø 20,64	Alu, +ABS, +TC
	7/04-				**PF816**		Ø 20,64	Alu, +ABS, -TC
1.4 VVT-i Eng.4ZZFE (71kW)	02-04				**PF814**	Aisin	Ø 20,64	Alu, Made in Japan, Only SW
	1/02-				**PF817**	Trw	Ø 20,64	Alu, +ABS, +TC
	02-				**PF936**	Trw	Ø 20,64	Alu, +ESP, RHD
	1/02-				**PF816**		Ø 20,64	Alu, +ABS, -TC
1.6 VVT-i Eng.3ZZFE (81kW)	02-04				**PF814**	Aisin	Ø 20,64	Alu, Made in Japan, Only SW
	1/02-				**PF817**	Trw	Ø 20,64	Alu, +ABS, +TC
	02-				**PF936**	Trw	Ø 20,64	Alu, +ESP, RHD
	1/02-				**PF816**		Ø 20,64	Alu, +ABS, -TC
1.8 VVTLi TS Eng.2ZZGE (160-165kW)	05-				**PF936**	Trw	Ø 20,64	Alu, +ESP, RHD
1.8 VVTLi TS (Exc. SW) Eng.2ZZGE (141kW)	02-				**PF817**	Trw	Ø 20,64	Alu, +ABS, +TC
	02-				**PF936**	Trw	Ø 20,64	Alu, +ESP, RHD
	02-				**PF816**		Ø 20,64	Alu, +ABS, -TC
2.0 D-4D Eng.1ADFTV (93kW)	07-08				**PF969**	Bch	Ø 22,20	Alu, +ESP
	4/08-				**PF968**	Bch	Ø 22,20	Alu, -ESP
2.0 D-4D Eng.1CDFTV (66kW)	02-04				**PF814**	Aisin	Ø 20,64	Alu, Made in Japan, Only SW
	1/02-				**PF817**	Trw	Ø 20,64	Alu, +ABS, +TC
	02-				**PF936**	Trw	Ø 20,64	Alu, +ESP, RHD
	1/02-				**PF816**		Ø 20,64	Alu, +ABS, -TC
2.0 D-4D Eng.1CDFTV (81kW)	1/02-				**PF817**	Trw	Ø 20,64	Alu, +ABS, +TC
	02-				**PF936**	Trw	Ø 20,64	Alu, +ESP, RHD
	1/02-				**PF816**		Ø 20,64	Alu, +ABS, -TC
2.0 D-4D Eng.1CDFTV (85kW)	03-		R		**CF798**		Ø 19,05	Alu
	03-				**PF817**	Trw	Ø 20,64	Alu, +ABS, +TC
	03-				**PF816**		Ø 20,64	Alu, +ABS, -TC
Corolla VIII Verso (R1) 4/04-12/09								
1.6 VVT-i Eng.3ZZFE (81kW)	04-				**PF790**	Bch	Ø 23,81	Alu, +ESP
	04-				**PF789**	Bch	Ø 23,81	Alu, 2 Connections, -ESP
	04-				**PF962**	Bch	Ø 23,81	Alu, 4 Connection, -ESP
1.8 16v VVTi Eng.1ZZFE (95kW)	04-				**PF790**	Bch	Ø 23,81	Alu, +ESP
	04-				**PF789**	Bch	Ø 23,81	Alu, 2 Connections, -ESP
	04-				**PF962**	Bch	Ø 23,81	Alu, 4 Connection, -ESP
2.0 D-4D Eng.1CDFTV (85kW)	4/04-		R		**CF798**		Ø 19,05	Alu
	04-				**PF790**	Bch	Ø 23,81	Alu, +ESP
	04-				**PF789**	Bch	Ø 23,81	Alu, 2 Connections, -ESP
	04-				**PF962**	Bch	Ø 23,81	Alu, 4 Connection, -ESP
2.2 D Eng.2ADFHV (130kW)	05-				**PF790**	Bch	Ø 23,81	Alu, +ESP
2.2 D-4D Eng.2ADFTV (100kW)	05-				**PF790**	Bch	Ø 23,81	Alu, +ESP
Corona I (RX, RT) 12/75-1/81								
1.8, LiftB. Eng.3T (63-70kW)	79-81		R		**CF345**		Ø 19,05	Front Drum Brake
	79-81		R		**CF346**		Ø 20,64	Front Disc Brake
	79-81				**CZ126**		Ø 20,64	
2.0, SW Eng.18R (65-81kW)	75-79		R		**CF345**		Ø 19,05	Front Drum Brake
	75-79		R		**CF346**		Ø 20,64	Front Disc Brake
	75-79				**CZ126**		Ø 20,64	
Cressida II (RX3), SW 7/77-7/81								
2.0 Eng.18R (66kW)	77-81		R		**CF346**		Ø 20,64	
Cressida III (X6), SW 9/80-3/85								
2.0 Eng.21R/ 21RC (77kW)	81-85		R		**CF346**		Ø 20,64	
2.0 GLI (Exc. SW) Eng.1GE (80kW)	82-84		R		**CF346**		Ø 20,64	
2.2 D Eng.L (49kW)	80-85		R		**CF346**		Ø 20,64	
2.6	80-85		R		**CF431**		Ø 22,20	
2.8 Eng.5MGE (125kW)	80-85		R		**CF431**		Ø 22,20	
Cressida IV (X7), SW 3/85-1/88								
1.8 Eng.2YPUJE	85-88		R		**CF510**		Ø 22,20	South Africa
2.0	85-86		R		**CF431**		Ø 22,20	Middle East
	85-88		R		**CF510**		Ø 22,20	
2.4 D Eng.2LT (63-66kW)	85-88		R		**CF510**		Ø 22,20	
Cressida V (X8), SW 1/88-1/93								
1.8 Eng.4SFI	88-93		R		**CF628**		Ø 22,22	
2.0 Eng.3YP (65kW)	88-93		R		**CF628**		Ø 22,22	
All models	88-93		R		**CF628**		Ø 22,22	

		Spare Parts	F/R	L/R	FRITECH ref.		DIMENSIONS mm.	NOTE
Crown I (S1) 1/61-12/94								
2.0 (MS112) Eng.3YPU/ PE/ 3YC (65kW)	80-94		R		**CF459**		Ø 20,64	
2.2 Eng.4Y (69kW)	88-94		R		**CF459**		Ø 20,64	
2.2 D (LS110) Eng.L (49-53kW)	80-83		R		**CF459**		Ø 20,64	
	1/83-7/83		R		**CF458**		Ø 22,20	
2.4 TD (LS130) Eng.2LTE/ EH (71kW)	84-92		R		**CF459**		Ø 20,64	
	92-94		R		**CF458**		Ø 22,20	
2.6 Eng.4M (88kW)	74-79		R		**CF226**		Ø 23,81	
2.8 SI (MS122/132/133), SW Eng.5ME (107kW)	80-91		R		**CF459**		Ø 20,64	
	80-91		R		**CF458**		Ø 22,20	SW
iQ (AJ1) 3/09-12/14								
1.0 Eng.1KRFE (50kW)	09-		R	L	**CF580**		Ø 17,46	Alu
	09-		R	R	**CF788**		Ø 17,46	Alu
1.3 Eng.1NRFE (69-72-74kW)	09-		R	L	**CF580**		Ø 17,46	Alu
	09-		R	R	**CF788**		Ø 17,46	Alu
1.4 D-4D Eng.1NDTV (66kW)	09-		R	L	**CF580**		Ø 17,46	Alu
	09-		R	R	**CF788**		Ø 17,46	Alu
Land Cruiser I (J4), Pick-Up 3/69-4/86								
3.0 D (BJ40V, BJ43) (Exc. Pick-up) Eng.B (59kW)	80-84		R		**CF460**		Ø 25,40	
3.4 D (BJ42V, BJ45_V/P, BJ46) Eng.3B (66kW)	80-84		R		**CF460**		Ø 25,40	Mod. BJ42
4.0 D (HJ47V/P) Eng.2H (74-76kW)	80-84		R		**CF460**		Ø 25,40	
Land Cruiser II (J6) 10/81-12/89								
3.4 D (BJ60V) Eng.3B (66kW)	81-87		R		**CF460**		Ø 25,40	Hardtop
4.0 (FJ62V) Eng.3F (101kW)	84-87		R		**CF460**		Ø 25,40	
Land Cruiser III (J7) 11/84-								
2.4 (RJ70, RJ73) Eng.22R (77kW)	84-90		R		**CF459**		Ø 20,64	Front Drum Brake
	84-90		R		**CF226**		Ø 23,81	Front Disc Brake
2.4 (RJ70, RJ73) Eng.22R (81kW)	84-90		R		**CF459**		Ø 20,64	Front Drum Brake
	84-90		R		**CF226**		Ø 23,81	Front Disc Brake
3.0 TD (KZJ70, 73, 77), Hardtop Eng.1KZT (92kW)	93-96		R		**CF460**		Ø 25,40	
3.4 D (BJ70V, BJ73) Eng.3B (66-70kW)	84-96		R		**CF460**		Ø 25,40	
4.2 TD (HZJ7_V), 4WD Eng.1HZ (96-100-123kW)	90-		R		**CF460**		Ø 25,40	
Paseo II (EL54) 8/95-7/99								
1.5 16v, Cabrio Eng.5EFE (66kW)	95-99		R	L	**CF806**	Tokiko	Ø 17,46	
	95-99		R	R	**CF807**	Tokiko	Ø 17,46	
Previa I (TCR1, 2) 5/90-8/00								
2.4, 4WD Eng.2TZFE (97kW)	90-		R		**CF458**		Ø 22,20	
Previa II (ACR3) 8/00-12/05								
2.0 D-4D Eng.1CDFTV (66-81-85kW)	3/01-		R		**CF798**		Ø 19,05	Alu
Prius I (NHW11) 5/00-1/04								
1.5 Eng.1NZFXE (53kW)	00-04		R	L	**CF858**		Ø 20,64	Alu
	00-04		R	R	**CF857**		Ø 20,64	Alu
Rav 4 I (XA1) 6/94-6/00								
2.0 16v, Cabrio Eng.3SFE (90-95-98kW)	95-00		R		**CF832**		Ø 17,46	
	94-00				**PF905**		Ø 22,20	Alu, -ABS, M/T+A/T
Rav 4 II (XA2) 6/00-2/06								
1.8 16v VVTi Eng.1ZZFE (92-95-99-103kW)	2/01-		R		**CF798**		Ø 19,05	Alu
	01-06				**PF643**		Ø 20,64	Alu
2.0 D-4D 4WD Eng.1CDFTV (66-81-85kW)	9/01-		R		**CF798**		Ø 19,05	Alu
	9/01-06				**PF643**		Ø 20,64	Alu, M/T
2.0 VVTi 4WD Eng.1AZFE/ FSE (110kW)	6/00-		R		**CF798**		Ø 19,05	Alu
	6/00-2/03				**PF643**		Ø 20,64	Alu, M/T+A/T
Starlet II (P6) 2/78-9/84								
1.0 (KP60), SW Eng.2K (33-43kW)	78-84		R		**CF273**		Ø 19,05	
	78-84		R		**CF412**		Ø 20,64	SW
1.2 S (KP62), SW Eng.3KH (39-41-57kW)	78-82		R		**CF273**		Ø 19,05	
1.3 (KP61) Eng.4K (41-43-48kW)	82-84		R		**CF273**		Ø 19,05	
Starlet III (P7) 10/84-12/89								
1.0 (EP70L) Eng.1EL (40kW)	84-89		R	L	**CF215**		Ø 17,46	
	84-89		R	R	**CF214**		Ø 17,46	
1.3 (EP71L) Eng.2ELC (55-68kW)	84-89		R	L	**CF215**		Ø 17,46	
	84-89		R	R	**CF214**		Ø 17,46	

TOYOTA

		Spare Parts	F/R	L/R	FRITECH ref.		DIMENSIONS mm.	NOTE
1.5 D (NP70L) Eng.1N (40kW)	86-89		R	L	**CF215**		Ø 17,46	
	86-89		R	R	**CF214**		Ø 17,46	
Starlet IV (P8) 12/89-3/96								
1.0 (EP80) Eng.1E (40kW)	89-92		R	L	**CF215**		Ø 17,46	
	89-92		R	R	**CF214**		Ø 17,46	
1.3 12v (EP81), Kat Eng.2E/ 2EE (55kW)	89-96		R	L	**CF636**	Luc	Ø 15,87	+ABS
	89-96		R	L	**CF215**		Ø 17,46	
	89-96		R	R	**CF648**	Luc	Ø 17,46	+ABS
	89-96		R	R	**CF214**		Ø 17,46	
1.5 D (NP80) Eng.1N (40kW)	89-96		R	L	**CF636**	Luc	Ø 15,87	+ABS
	89-96		R	L	**CF215**		Ø 17,46	
	89-96		R	R	**CF648**	Luc	Ø 17,46	+ABS
	89-96		R	R	**CF214**		Ø 17,46	
Starlet V (P9) 4/96-3/99								
1.3 (EP91) Eng.4EFE (55kW)	96-99		R	L	**CF636**	Luc	Ø 15,87	+ABS
	96-99		R	L	**CF806**	Tokiko	Ø 17,46	-ABS
	96-99		R	R	**CF648**	Luc	Ø 17,46	+ABS
	96-99		R	R	**CF807**	Tokiko	Ø 17,46	-ABS
Tercel I (L1, L2) 3/79-4/86								
1.3 (AL20, AL11) Eng.2A (48kW)	82-85		R	L	**CF215**		Ø 17,46	
	82-85		R	R	**CF214**		Ø 17,46	
	79-82		R		**CF413**		Ø 15,87	
1.5, 4WD (AL25) Eng.3AC/ LU/ U (52kW)	83-88		R	L	**CF213**		Ø 19,05	
	83-88		R	R	**CF212**		Ø 19,05	
	10/86-3/88		R		**CF273**		Ø 19,05	SW, 4WD
Trueno 8/74-12/80								
1.2 (40kW)	74-77		R		**CF345**		Ø 19,05	Exc. Europe
	74-77		R		**CF346**		Ø 20,64	Europe
Urban Cruiser 6/09-12/14								
1.3 Eng.1NRFE (74kW)	09-				**PF957**		Ø 20,64	Alu, Usa
1.4 D-4D, 4WD Eng.1NDTV (66kW)	09-				**PF957**		Ø 20,64	Alu, Usa
Verso-S 6/11-								
1.3 VVTi Eng.1NRFE (73kW)	11-		R		**CF1025**		Ø 22,20	Alu
1.4 D MT Eng.1NDTV (66kW)	11-		R		**CF1025**		Ø 22,20	Alu
Yaris I (CP10)/ Vitz/Platz 4/99-12/05								
1.0 16v Eng.1SZFE (48kW)	03-		R		**CF438**	Bch	Ø 19,05	Alu, Made in France
	03-				**PF553**	Bch	Ø 20,64	Alu, Made in France, +ABS
	03-05				**PF552**	Bch	Ø 20,64	Alu, Made in France, -ABS
	03-				**PF796**		Ø 20,64	Alu, Made in Japan, +ABS
	03-				**PF797**		Ø 20,64	Alu, Made in Japan, -ABS
1.0 16v Eng.1SZFE (50kW)	1/99-8/99		R	L	**CF787**		Ø 17,46	Alu
	8/99-03		R	L	**CF580**		Ø 17,46	Alu
	1/99-8/99		R	R	**CF579**		Ø 17,46	Alu
	8/99-03		R	R	**CF788**		Ø 17,46	Alu
	03-		R		**CF438**	Bch	Ø 19,05	Alu, Made in France
	99-				**PF796**		Ø 20,64	Alu, Made in Japan, +ABS
	99-				**PF797**		Ø 20,64	Alu, Made in Japan, -ABS
1.3 Eng.2SZFE (64kW)	02-		R		**CF438**	Bch	Ø 19,05	Alu, Made in France
	02-				**PF553**	Bch	Ø 20,64	Alu, Made in France, +ABS
	02-				**PF552**	Bch	Ø 20,64	Alu, Made in France, -ABS
	02-				**PF796**		Ø 20,64	Alu, Made in Japan, +ABS
	02-				**PF797**		Ø 20,64	Alu, Made in Japan, -ABS
1.3 16v (NCP10) Eng.2NZFE (63kW)	1/99-8/99		R	L	**CF787**		Ø 17,46	Alu
	8/99-		R	L	**CF580**		Ø 17,46	Alu
	1/99-8/99		R	R	**CF579**		Ø 17,46	Alu
	8/99-		R	R	**CF788**		Ø 17,46	Alu
	99-				**PF796**		Ø 20,64	Alu, Made in Japan, +ABS
	99-				**PF797**		Ø 20,64	Alu, Made in Japan, -ABS
1.4 D-4D Eng.1NDTV (55kW)	01-03		R	L	**CF580**		Ø 17,46	Alu
	01-03		R	R	**CF788**		Ø 17,46	Alu
	03-		R		**CF438**	Bch	Ø 19,05	Alu, Made in France
	03-05				**PF553**	Bch	Ø 20,64	Alu, Made in France, +ABS
	03-05				**PF552**	Bch	Ø 20,64	Alu, Made in France, -ABS
	01-				**PF796**		Ø 20,64	Alu, Made in Japan, +ABS

		Spare Parts	F/R	L/R	FRITECH ref.		DIMENSIONS mm.	NOTE
1.4 D-4D Eng.1NDTV (55kW)	01-				**PF797**		Ø 20,64	Alu, Made in Japan, -ABS
1.5 TS (NCP13) Eng.1NZFE (77kW)	11/03-				**PF959**	Jkc	Ø 22,20	Alu, Made in Japan, +ABS, +ESP
	03-				**PF796**		Ø 20,64	Alu, Made in Japan, +ABS, -ESP
	03-				**PF797**		Ø 20,64	Alu, Made in Japan, -ABS
1.5 VVT-i TS Eng.1NZFE (78kW)	11/03-				**PF959**	Jkc	Ø 22,20	Alu, Made in Japan, +ABS, +ESP
	01-				**PF796**		Ø 20,64	Alu, Made in Japan, +ABS
	01-				**PF797**		Ø 20,64	Alu, Made in Japan, -ABS
Yaris I (NC/LP2) Verso 11/99-12/05								
1.3 16v (NCP22) Eng.2NZFE (63kW)	99-		R	L	**CF708**		Ø 19,05	Alu
	99-		R	R	**CF707**		Ø 19,05	Alu
1.4 D-4D Eng.1NDTV (55kW)	12/01-		R	L	**CF708**		Ø 19,05	Alu
	12/01-		R	R	**CF707**		Ø 19,05	Alu
Yaris II (C/SP9) 1/06-9/11								
1.0 VVT-i Eng.1KRFE (51-52kW)	06-		R	L	**CF858**		Ø 20,64	Alu, Made in Japan
	06-		R	R	**CF857**		Ø 20,64	Alu, Made in Japan
	06-		R		**CF827**	Loc	Ø 20,64	Alu, Made in France
	06-				**PF860**	Advics	Ø 20,64	Alu, Made in France, +ESP
1.3 VVT-i Eng.1NRFE (74kW)	09-		R		**CF827**	Loc	Ø 20,64	Alu
1.3 VVT-i, 4WD Eng.2SZFE/2NZFE (64kW)	06-		R	L	**CF858**		Ø 20,64	Alu, Made in Japan
	06-		R	R	**CF857**		Ø 20,64	Alu, Made in Japan
	06-		R		**CF827**	Loc	Ø 20,64	Alu, Made in France
1.4 D-4D Eng.1NDTV (66kW)	06-		R	L	**CF858**		Ø 20,64	Alu, Made in Japan
	06-		R	R	**CF857**		Ø 20,64	Alu, Made in Japan
	06-		R		**CF827**	Loc	Ø 20,64	Alu, Made in France
1.8 Eng.2ZRFE (98kW)	07-		R	L	**CF858**		Ø 20,64	Alu, Made in Japan
	07-		R	R	**CF857**		Ø 20,64	Alu, Made in Japan
1.8 TS (72kW)	07-		R		**CF827**		Ø 20,64	Alu, Made in France
Yaris III (P13) 10/11-								
1.0 Eng.1KRFE (51kW)	11-		R		**CF1001**	Loc	Ø 20,64	Alu
1.3 Eng.1NRFE (73kW)	11-		R		**CF1001**	Loc	Ø 20,64	Alu
1.4 D-4D Eng.1NDTV (66kW)	11-		R		**CF1001**	Loc	Ø 20,64	Alu

TOYOTA LCV

Dyna I 100 8/77-12/89								
1.8 Eng.2Y (58kW)	86-12/88		R		**CF473**		Ø 20,64	
	1/88-12/89		R		**CF226**		Ø 23,81	Incl. Denmark
2.4 D Eng.2L (71kW)	86-12/88		R		**CF473**		Ø 20,64	
	1/88-12/89		R		**CF226**		Ø 23,81	Incl. Denmark
Dyna I 150 8/77-12/89								
1.8 Eng.2Y (58kW)	86-87		R		**CF473**		Ø 20,64	
2.4 D Eng.2L (71kW)	86-89		R		**CF473**		Ø 20,64	
Dyna IV (KD, LY) 8/01-								
2.5 D-4D Eng.2KDFTV (65kW)	01-		R		**CF557**		Ø 23,81	
2.5 D-4D Eng.2KDFTV (75kW)	01-		R		**CF557**		Ø 23,81	
Hiace I (H) 2/77-12/84								
1.6 Eng.12R (48-49kW)	77-83		R		**CF500**		Ø 19,05	
2.0 (RH25-32) Eng.18R (65-81kW)	77-83		R		**CF500**		Ø 19,05	
	77-83				**CZ126**		Ø 20,64	
2.2 D (LH20-30) Eng.L (46-49kW)	77-83		R		**CF500**		Ø 19,05	
Hiace II (H5) 3/83-11/89								
1.6 Eng.12R (49kW)	83-85		R		**CF473**		Ø 20,64	
1.8 Eng.2Y (58kW)	83-12/85		R		**CF473**		Ø 20,64	N1
	83-87		R		**CF226**		Ø 23,81	
2.0 Eng.3Y/ 3YC (65kW)	85-12/85		R		**CF473**		Ø 20,64	N1
	85-89		R		**CF226**		Ø 23,81	
2.2 D Eng.L (49-72kW)	83-12/85		R		**CF473**		Ø 20,64	N1
	3/83-8/84		R		**CF226**		Ø 23,81	
2.4 D, 4WD Eng.2L (55kW)	8/84-12/85		R		**CF473**		Ø 20,64	N1
	8/84-89		R		**CF226**		Ø 23,81	
Hiace III (H10) 8/89-8/95								
2.0 (RZH102) Eng.1RZ (74kW)	90-94		R		**CF226**		Ø 23,81	
2.4 D (LH102), 4WD Eng.2L (55-57-71kW)	92-		R		**CF226**		Ø 23,81	
	92-		R		**CF460**		Ø 25,40	Minibus

TOYOTA LCV

		Spare Parts	F/R	L/R	FRITECH ref.		DIMENSIONS mm.	NOTE
2.4, 4WD (RZH103) Eng.2RZE (88kW)	92-95		R		**CF226**		Ø 23,81	
	92-95		R		**CF460**		Ø 25,40	Minibus
Hiace IV (H1, H2) 8/95-12/04								
2.4 D Eng.2L (55kW)	99-		R		**CF992**	Aisin	Ø 25,40	
2.4 TD, 4WD Eng.2LT (63-66kW)	95-		R		**CF992**	Aisin	Ø 25,40	
2.4, 4WD Eng.2RZE (85-88kW)	95-98		R		**CF992**	Aisin	Ø 25,40	
2.5 D-4D Eng.2KDFTV (65-70-75kW)	01-		R		**CF992**	Aisin	Ø 25,40	
2.7, 4WD Eng.3RZFE (105-106kW)	98-		R		**CF992**	Aisin	Ø 25,40	
Hiace V 1/05-								
2.5 D-4D Eng.2KDFTV (70kW)	06-		R		**CF992**	Aisin	Ø 25,40	
2.5 D-4D 4x4 Eng.2KDFTV (86kW)	06-		R		**CF992**	Aisin	Ø 25,40	
Hilux I (N) 1/72-1/89								
1.6 Eng.12R (46-48kW)	72-89		R		**CF473**		Ø 20,64	Front Drum Brake
	72-89		R		**CF290**		Ø 22,20	Front Disc Brake
1.8 Eng.2Y (58kW)	84-89		R		**CF500**		Ø 19,05	Pick up, 4WD
	84-89		R		**CF290**		Ø 22,20	
2.0 Eng.3Y/ 3YC (65kW)	79-83		R		**CF500**		Ø 19,05	Pick up, 4WD
2.2 D Eng.L (47kW)	82-89		R		**CF500**		Ø 19,05	Pick up, 4WD
	72-84		R		**CF473**		Ø 20,64	Front Drum Brake
	78-89		R		**CF290**		Ø 22,20	Front Disc Brake
2.4 D Eng.2L (57-71kW)	84-89		R		**CF290**		Ø 22,20	
Hilux II (N) Pick-Up 1/84-7/05								
1.8 Eng.2Y (58-61kW)	88-94		R		**CF473**		Ø 20,64	
2.2 4WD Eng.4Y/ 4YEC (69-72kW)	87-89		R		**CF510**		Ø 22,20	RN, YN 106, 110
	87-89		R		**CF582**		Ø 22,22	
2.4 4WD Eng.2RZFE (103kW)	97-		R		**CF582**		Ø 22,22	
2.4 D, 4WD Eng.2L (58-61kW)	3/95-		R		**CF992**	Aisin	Ø 25,40	
	94-		R		**CF510**		Ø 22,20	LN105, 110
	94-		R		**CF582**		Ø 22,22	
2.4 i 4WD Eng.22R (84kW)	6/89-		R		**CF582**		Ø 22,22	
2.5 D-4D Eng.2KDFTV (65kW)	01-		R		**CF992**	Aisin	Ø 25,40	
Hilux III Pick-up 1/05-4/15								
2.5 D-4D 4WD Eng.2KDFTV (106kW)	10-		R		**CF996**	Trw	Ø 22,20	Alu
2.5 D-4D, 4WD Eng.2KDFTV (75kW)	05-		R		**CF996**		Ø 22,20	Alu
3.0 D-4D, 4WD Eng.1KDFTV (126kW)	05-		R		**CF996**		Ø 22,20	Alu
Liteace I 10/79-1/98								
1.3 Eng.4KC/ 4K (42-43kW)	79-12/82		R		**CF345**		Ø 19,05	
	1/83-11/86		R		**CF346**		Ø 20,64	
1.5 Eng.5K (51-52-61kW)	86-9/91		R		**CF346**		Ø 20,64	
1.8 D Eng.1C (41kW)	10/82-12/82		R		**CF345**		Ø 19,05	
	1/83-85		R		**CF346**		Ø 20,64	
1.8 D Eng.1C (46-48kW)	85-88		R		**CF346**		Ø 20,64	
2.0 D Eng.2C (51-53kW)	92-94		R		**CF346**		Ø 20,64	
Modell F (R2, 31) Bus 11/82-1/90								
1.8 (YR20) Eng.2Y/ 2YC (58kW)	1/86-90		R		**CF459**		Ø 20,64	
	82-12/85		R		**CF458**		Ø 22,20	
2.0 Eng.3Y (66kW)	88-90		R		**CF459**		Ø 20,64	
2.0 Eng.3Y/ 3YC (65kW)	1/86-88		R		**CF459**		Ø 20,64	
	84-12/85		R		**CF458**		Ø 22,20	
2.2 (YR22LG, YR31LG) Eng.4Y/ 4YEC (72kW)	87-90		R		**CF459**		Ø 20,64	
Pick-Up 1/75-								
1 ton	75-		R		**CF290**		Ø 22,20	
	75-		R		**CF458**		Ø 22,20	
3/4 Ton	75-		R		**CF473**		Ø 20,64	
	75-		R		**CF226**		Ø 23,81	
All models	75-		R		**CF769**		Ø 17,46	Exc. Turbo, 4WD
	75-		R		**CF500**		Ø 19,05	Exc. Turbo, 4WD
	75-		R		**CF510**		Ø 22,20	Turbo
Proace I 6/13-12/15								
1.6 D-4D Eng.3WZ-TV (66kW)	13-				**PF878**	Ate	Ø 25,40	Alu, +ABS, +ESP
2.0 D-4D Eng.4WZ-FHV (120kW)	13-				**PF878**	Ate	Ø 25,40	Alu, +ABS, +ESP
2.0 D-4D Eng.4WZ-FTV (94kW)	13-				**PF878**	Ate	Ø 25,40	Alu, +ABS, +ESP

TOYOTA LCV

		Spare Parts	F/R	L/R	FRITECH ref.		DIMENSIONS mm.	NOTE
T100 1/93-1/98								
1/2 ton	93-98		R		**CF557**		Ø 23,81	
Vanwagon 1/83-12/91								
All models	1/91-12/91		R		**CF458**		Ø 22,20	+ABS
	83-88		R		**CF459**		Ø 20,64	

VOLKSWAGEN

147 1/66-7/74								
All models	-7/74		R		**CF194**		Ø 17,46	Ch 118328506-
	66-		R		**CF263**		Ø 19,05	Ch -118328505
1500,1600 (31, 36), Variant 4/61-7/73								
1.5 Eng.341 (40kW)	63-65		F		**CF300**		Ø 23,81	
	63-65		R		**CF263**		Ø 19,05	
1.5 Eng.K (33kW)	8/66-7/67		F		**CF300**		Ø 23,81	
	8/67-70		R		**CF194**		Ø 17,46	
	8/66-7/67		R		**CF263**		Ø 19,05	
1.6 (Exc. SW) Eng.P (37kW)	64-7/67		F		**CF300**		Ø 23,81	
	8/67-73		R		**CF194**		Ø 17,46	
	64-7/67		R		**CF263**		Ø 19,05	
1.6 L Eng.T/ U (40kW)	65-7/67		F		**CF300**		Ø 23,81	
	8/67-70		R		**CF194**		Ø 17,46	
	65-7/67		R		**CF263**		Ø 19,05	
181 9/69-2/79								
1.5 Eng.H (32kW)	8/69-81		R		**CF193**		Ø 22,22	
1.6 Eng.AG (32kW)	8/69-81		R		**CF193**		Ø 22,22	
1.6 Eng.AL/ AM (35kW)	8/69-81		R		**CF193**		Ø 22,22	
Bora (1J2, 1J6), Variant 10/98-12/04								
1.4 16v Eng.AHW/ AKQ/ APE/ AUA/ AXP/ BCA	00-				**PF799**	Ate	Ø 23,81	Alu, +ESP
(55kW)	10/98-00				**PF241**	Ate	Ø 23,81	Alu, +ESP, LHD
	98-				**PF818**	Bch	Ø 23,81	Alu, -ESP, RHD
	98-				**PF234**		Ø 23,81	-ESP, LHD
	98-				**CZ081**	Fte	Ø 23,81	Alu
	98-				**CZ026**		Ø 23,81	Pla
	98-				**PZ064**	Sachs	Ø 15,87	Pla, LHD
	98-				**PZ107**	Sachs	Ø 15,87	LHD
1.6 Eng.AEH/ AKL/ APF (74kW)	00-				**PF799**	Ate	Ø 23,81	Alu, +ESP
	10/98-00				**PF241**	Ate	Ø 23,81	Alu, +ESP, LHD
	10/98-				**PF818**	Bch	Ø 23,81	Alu, -ESP, RHD
	10/98-				**PF234**		Ø 23,81	-ESP, LHD
	98-				**CZ081**	Fte	Ø 23,81	Alu
	98-				**CZ026**		Ø 23,81	Pla
	98-				**PZ064**	Sachs	Ø 15,87	Pla, LHD
	98-				**PZ107**	Sachs	Ø 15,87	LHD
1.6 Eng.AVU/ BFQ/ BJH (75kW)	00-				**PF799**	Ate	Ø 23,81	Alu, +ESP
	10/98-00				**PF241**	Ate	Ø 23,81	Alu, +ESP, LHD
	10/98-				**PF818**	Bch	Ø 23,81	Alu, -ESP, RHD
	10/98-				**PF234**		Ø 23,81	-ESP, LHD
	98-				**CZ081**	Fte	Ø 23,81	Alu
	98-				**CZ026**		Ø 23,81	Pla
	98-				**PZ064**	Sachs	Ø 15,87	Pla, LHD
	98-				**PZ107**	Sachs	Ø 15,87	LHD
1.6 16v Eng.ATN/ AUS/ AZD/ BCB (77kW)	2/00-8/00				**PF241**	Ate	Ø 23,81	Alu, +ESP
	9/00-				**PF799**	Ate	Ø 23,81	Alu, +ESP
	2/00-				**PF818**	Bch	Ø 23,81	Alu, -ESP, RHD
	2/00-				**PF234**		Ø 23,81	-ESP, LHD
	00-				**CZ081**	Fte	Ø 23,81	Alu
	00-				**CZ026**		Ø 23,81	Pla
	00-				**PZ064**	Sachs	Ø 15,87	Pla, LHD
	00-				**PZ107**	Sachs	Ø 15,87	LHD
1.6 FSI Eng.BAD (81kW)	02-				**PF799**	Ate	Ø 23,81	Alu, +ESP
	02-				**PF818**	Bch	Ø 23,81	Alu, -ESP, RHD
	02-				**PF234**		Ø 23,81	-ESP
	02-				**CZ077**	Fte	Ø 19,05	Pla
	02-				**CZ099**	Fte	Ø 19,05	

VOLKSWAGEN

		Spare Parts	F/R	L/R	FRITECH ref.		DIMENSIONS mm.	NOTE
1.6 FSI Eng.BAD (81kW)	02-				**PZ064**	Sachs	Ø 15,87	Pla, LHD
	02-				**PZ107**	Sachs	Ø 15,87	LHD
1.8 T. Eng.AGU/ ARX/ AUM/ BAE (110kW)	00-				**PF799**	Ate	Ø 23,81	Alu, +ESP
	00-				**PF818**	Bch	Ø 23,81	Alu, -ESP, RHD
	00-				**PF234**		Ø 23,81	-ESP
	5/00-				**CZ076**		Ø 19,05	
	98-				**PZ064**	Sachs	Ø 15,87	Pla, LHD
	98-				**PZ107**	Sachs	Ø 15,87	LHD
1.8 T. Eng.AUQ (132kW)	02-				**PF799**	Ate	Ø 23,81	Alu, +ESP
	02-				**PF818**	Bch	Ø 23,81	Alu, -ESP, RHD
	02-				**PF234**		Ø 23,81	-ESP
	02-				**PZ064**	Sachs	Ø 15,87	Pla, LHD
	02-				**PZ107**	Sachs	Ø 15,87	LHD
1.8, 4motion Eng.AGN/ BAF (92kW)	00-				**PF799**	Ate	Ø 23,81	Alu, +ESP
	10/98-00				**PF241**	Ate	Ø 23,81	Alu, +ESP, LHD
	10/98-				**PF818**	Bch	Ø 23,81	Alu, -ESP, RHD
	10/98-				**PF234**		Ø 23,81	-ESP, LHD
	10/98-				**CZ076**		Ø 19,05	
	98-				**PZ064**	Sachs	Ø 15,87	Pla, LHD
	98-				**PZ107**	Sachs	Ø 15,87	LHD
1.9 SDi (Exc. SW) Eng.AGP/ AQM (50kW)	9/00-				**PF799**	Ate	Ø 23,81	Alu, +ESP
	98-8/00				**PF241**	Ate	Ø 23,81	Alu, +ESP
	98-				**PF818**	Bch	Ø 23,81	Alu, -ESP, RHD
	98-				**PF234**		Ø 23,81	-ESP
	10/98-				**CZ081**	Fte	Ø 23,81	Alu
	10/98-				**CZ026**		Ø 23,81	Pla
	98-				**PZ064**	Sachs	Ø 15,87	Pla, LHD
	98-				**PZ107**	Sachs	Ø 15,87	LHD
1.9 TDi Eng.AHF/ ASV (81kW)	00-				**PF799**	Ate	Ø 23,81	Alu, +ESP
	10/98-00				**PF241**	Ate	Ø 23,81	Alu, +ESP, LHD
	10/98-				**PF818**	Bch	Ø 23,81	Alu, -ESP, RHD
	10/98-				**PF234**		Ø 23,81	-ESP, LHD
	10/98-6/01				**CZ076**		Ø 19,05	
	98-				**PZ064**	Sachs	Ø 15,87	Pla, LHD
	98-				**PZ107**	Sachs	Ø 15,87	LHD
1.9 TDi, 4motion Eng.AGR/ ALH/ ANU (66kW)	00-				**PF799**	Ate	Ø 23,81	Alu, +ESP
	10/98-00				**PF241**	Ate	Ø 23,81	Alu, +ESP, LHD
	10/98-				**PF818**	Bch	Ø 23,81	Alu, -ESP, RHD
	10/98-				**PF234**		Ø 23,81	-ESP, LHD
	98-01				**CZ076**		Ø 19,05	
	98-				**PZ064**	Sachs	Ø 15,87	Pla, LHD
	98-				**PZ107**	Sachs	Ø 15,87	LHD
1.9 TDi, 4motion Eng.AJM/ AUY (85kW)	9/00-01				**PF799**	Ate	Ø 23,81	Alu, +ESP
	99-00				**PF241**	Ate	Ø 23,81	Alu, +ESP
	99-01				**PF818**	Bch	Ø 23,81	Alu, -ESP, RHD
	99-01				**PF234**		Ø 23,81	-ESP
	98-				**PZ064**	Sachs	Ø 15,87	Pla, LHD
	98-				**PZ107**	Sachs	Ø 15,87	LHD
1.9 TDi, 4motion Eng.ARL (110kW)	00-				**PF799**	Ate	Ø 23,81	Alu, +ESP
	00-				**PF818**	Bch	Ø 23,81	Alu, -ESP, RHD
	00-				**PF234**		Ø 23,81	-ESP
	00-				**PZ064**	Sachs	Ø 15,87	Pla, LHD
	00-				**PZ107**	Sachs	Ø 15,87	LHD
1.9 TDi, 4motion Eng.ASZ (96kW)	00-				**PF799**	Ate	Ø 23,81	Alu, +ESP
	00-				**PF818**	Bch	Ø 23,81	Alu, -ESP, RHD
	00-				**PF234**		Ø 23,81	-ESP
	00-				**PZ064**	Sachs	Ø 15,87	Pla, LHD
	00-				**PZ107**	Sachs	Ø 15,87	LHD
1.9 TDi, 4motion Eng.ATD/ AXR (74kW)	00-				**PF799**	Ate	Ø 23,81	Alu, +ESP
	00-				**PF818**	Bch	Ø 23,81	Alu, -ESP, RHD
	00-				**PF234**		Ø 23,81	-ESP
	9/00-				**CZ076**		Ø 19,05	
	00-				**PZ064**	Sachs	Ø 15,87	Pla, LHD
	00-				**PZ107**	Sachs	Ø 15,87	LHD

		Spare Parts	F/R	L/R	FRITECH ref.		DIMENSIONS mm.	NOTE
2.0, 4motion Eng.APK/ AQY/ AZH/ AZG/ AZJ (85kW)	00-				**PF799**	Ate	Ø 23,81	Alu, +ESP
	10/98-00				**PF241**	Ate	Ø 23,81	Alu, +ESP, LHD
	10/98-				**PF818**	Bch	Ø 23,81	Alu, -ESP, RHD
	10/98-				**PF234**		Ø 23,81	-ESP, LHD
	10/98-				**CZ076**		Ø 19,05	
	98-				**PZ064**	Sachs	Ø 15,87	Pla, LHD
	98-				**PZ107**	Sachs	Ø 15,87	LHD
2.3 V5, 4motion Eng.AQN (125kW)	00-				**PF799**	Ate	Ø 23,81	Alu, +ESP
	00-				**PF818**	Bch	Ø 23,81	Alu, -ESP, RHD
	00-				**PF234**		Ø 23,81	-ESP
	10/00-				**CZ076**		Ø 19,05	
	00-				**PZ064**	Sachs	Ø 15,87	Pla, LHD
	00-				**PZ107**	Sachs	Ø 15,87	LHD
2.3 VR5, 4motion Eng.AGZ (110kW)	10/98-00				**PF241**	Ate	Ø 23,81	Alu, +ESP, LHD
	10/98-				**PF818**	Bch	Ø 23,81	Alu, -ESP, RHD
	10/98-				**PF234**		Ø 23,81	-ESP, LHD
	12/98-10/00				**CZ076**		Ø 19,05	
	98-				**PZ064**	Sachs	Ø 15,87	Pla, LHD
	98-				**PZ107**	Sachs	Ø 15,87	LHD
2.8 V6, 4motion Eng.AQP/ AUE/ BDE (150kW)	5/99-8/00				**PF241**	Ate	Ø 23,81	Alu, +ESP
	9/00-				**PF799**	Ate	Ø 23,81	Alu, +ESP
	99-				**PF818**	Bch	Ø 23,81	Alu, -ESP, RHD
	99-				**PF234**		Ø 23,81	-ESP
	99-				**PZ064**	Sachs	Ø 15,87	Pla, LHD
	99-				**PZ107**	Sachs	Ø 15,87	LHD
Corrado (53I) 9/88-12/95								
1.8 16v Eng.KR (100kW)	89-92				**PF039**	Luc	Ø 22,20	-ABS
1.8 G60 Eng.1H/ PG (118kW)	9/88-93				**CZ025**	Ate	Ø 23,81	Alu
	9/88-93				**CZ093**	Ate	Ø 23,81	
2.0 Eng.2E/ ADY/ AKR (85kW)	93-95				**PF039**	Luc	Ø 22,20	-ABS
	93-95				**CZ025**	Ate	Ø 23,81	Alu
	93-95				**CZ093**	Ate	Ø 23,81	
	93-95				**PZ062**	Ate	Ø 19,05	Ch 50ZR000787-
2.0 16v Eng.9A (100kW)	91-95				**PF039**	Luc	Ø 22,20	-ABS
	91-95				**CZ025**	Ate	Ø 23,81	Alu
	91-95				**CZ093**	Ate	Ø 23,81	
	91-95				**PZ062**	Ate	Ø 19,05	Ch 50ZR000787-
2.9 VR6 Eng.ABV (140kW)	91-				**PF039**	Luc	Ø 22,20	-ABS
	91-95				**CZ025**	Ate	Ø 23,81	Alu
	91-95				**CZ093**	Ate	Ø 23,81	
	91-95				**PZ062**	Ate	Ø 19,05	Ch 50ZR000787-
Dasher 1/73-1/81								
All models	73-81		R		**CF000**		Ø 17,46	
Derby I (86) 2/77-12/81								
0.9 Eng.HA (29kW)	1/77-		R		**CF001**		Ø 14,29	Ch -F127903, -CF
	1/77-09/81		R		**CF000**		Ø 17,46	+CF
	1/77-				**PF058**		Ø 20,64	Ch -F127903, +Servo
1.1 Eng.HB (37kW)	1/77-		R		**CF001**		Ø 14,29	Ch -F127903, -CF
	77-81		R		**CF725**		Ø 15,87	Ch F127904-, Alu, +CF
	-81		R		**CF080**		Ø 15,87	Ch F127904-, -CF
	1/77-		R		**CF000**		Ø 17,46	Ch -F127903, +CF
	77-81		R		**CF121**		Ø 19,05	Ch F127904-, Alu, +CF
	1/77-				**PF058**		Ø 20,64	Ch -F127903, +Servo
	-81				**PF005**		Ø 20,64	Ch F127904-, +Servo
1.3 Eng.HH (44kW)	1/77-		R		**CF001**		Ø 14,29	Ch -F127903, -CF
	77-81		R		**CF725**		Ø 15,87	Ch F127904-, Alu, +CF
	-81		R		**CF080**		Ø 15,87	Ch F127904-, -CF
	1/77-		R		**CF000**		Ø 17,46	Ch -F127903, +CF
	77-81		R		**CF121**		Ø 19,05	Ch F127904-, Alu, +CF
	1/77-				**PF058**		Ø 20,64	Ch -F127903, +Servo
	-81				**PF005**		Ø 20,64	Ch F127904-, +Servo
1.3 Eng.HJ (43kW)	77-81		R		**CF725**		Ø 15,87	Ch F127904-, Alu, +CF
	-81		R		**CF080**		Ø 15,87	Ch F127904-, -CF
	1/77-		R		**CF000**		Ø 17,46	Ch -F127903, +CF

VOLKSWAGEN

		Spare Parts	F/R	L/R	FRITECH ref.		DIMENSIONS mm.	NOTE
1.3 Eng.HJ (43kW)	77-81		R		**CF121**		Ø 19,05	Ch F127904-, Alu, +CF
Derby II (86C, 80) 8/81-12/88								
1.0 Eng.GL (29kW)	81-88		R		**CF080**		Ø 15,87	Ch F127904-, -CF
	81-88		R		**CF725**		Ø 15,87	Ch F127904-, Alu, -CF
	81-		R		**CF000**		Ø 17,46	Ch -F127903, +CF
	81-88		R		**CF121**		Ø 19,05	Ch F127904-, Alu, +CF
1.0 Eng.HZ (33kW)	81-		R		**CF001**		Ø 14,29	Ch -F127903, -CF
	81-88		R		**CF080**		Ø 15,87	Ch F127904-, -CF
	81-88		R		**CF725**		Ø 15,87	Ch F127904-, Alu, -CF
	81-		R		**CF000**		Ø 17,46	Ch -F127903, +CF
	81-88		R		**CF121**		Ø 19,05	Ch F127904-, Alu, +CF
	81-				**PF058**		Ø 20,64	Ch -F127903, +Servo
	-12/88				**PF005**		Ø 20,64	Ch F127904-, +Servo
1.1 Eng.HB (37kW)	81-		R		**CF001**		Ø 14,29	Ch -F127903, -CF
	81-88		R		**CF080**		Ø 15,87	Ch F127904-, -CF
	81-88		R		**CF725**		Ø 15,87	Ch F127904-, Alu, -CF
	81-		R		**CF000**		Ø 17,46	Ch -F127903, +CF
	81-88		R		**CF121**		Ø 19,05	Ch F127904-, Alu, +CF
	81-				**PF058**		Ø 20,64	Ch -F127903, +Servo
	-12/88				**PF005**		Ø 20,64	Ch F127904-, +Servo
1.3 Eng.2G/ HK/ HW/ MH (37-40kW)	83-84		R		**CF080**		Ø 15,87	Ch F127904-, -CF
	83-84		R		**CF725**		Ø 15,87	Ch F127904-, Alu, -CF
	83-		R		**CF000**		Ø 17,46	Ch -F127903, +CF
	83-84		R		**CF121**		Ø 19,05	Ch F127904-, Alu, +CF
1.3 Eng.3F/ GK (55kW)	82-88		R		**CF080**		Ø 15,87	Ch F127904-, -CF
	82-88		R		**CF725**		Ø 15,87	Ch F127904-, Alu, -CF
	82-		R		**CF000**		Ø 17,46	Ch -F127903, +CF
	82-88		R		**CF121**		Ø 19,05	Ch F127904-, Alu, +CF
1.3 Eng.HH (44kW)	81-		R		**CF001**		Ø 14,29	Ch -F127903, -CF
	81-88		R		**CF080**		Ø 15,87	Ch F127904-, -CF
	81-88		R		**CF725**		Ø 15,87	Ch F127904-, Alu, -CF
	81-		R		**CF000**		Ø 17,46	Ch -F127903, +CF
	81-88		R		**CF121**		Ø 19,05	Ch F127904-, Alu, +CF
	81-				**PF058**		Ø 20,64	Ch -F127903, +Servo
	-12/88				**PF005**		Ø 20,64	Ch F127904-, +Servo
1.3 Eng.HK/ NZ (40kW)	83-88		R		**CF080**		Ø 15,87	Ch F127904-, -CF
	83-88		R		**CF725**		Ø 15,87	Ch F127904-, Alu, -CF
	83-		R		**CF000**		Ø 17,46	Ch -F127903, +CF
	83-88		R		**CF121**		Ø 19,05	Ch F127904-, Alu, +CF
1.3 D Eng.MN (33kW)	82-88		R		**CF080**		Ø 15,87	-CF
	86-88		R		**CF725**		Ø 15,87	Alu, -CF
	86-88		R		**CF121**		Ø 19,05	Alu, +CF
	-12/88				**PF005**		Ø 20,64	Ch F127904-, +Servo
Eos I 3/06-10/13								
1.4 16v TSi Eng.CAVD/ CTHD (118kW)	07-				**CZ080**	Sachs	Ø 19,05	Alu, Cod. ID PR 0EJ
1.4 TSi Eng.CAXA (90kW)	08-				**CZ080**	Sachs	Ø 19,05	Alu, Cod. ID PR 0EJ
1.6 FSI Eng.BLF (85kW)	07-				**PF870**	Bch	Ø 22,20	Alu
	06-				**CZ080**	Sachs	Ø 19,05	Alu, Cod. ID PR 0EJ
2.0 16v TSi Eng.CCZB (155kW)	09-				**CZ080**	Sachs	Ø 19,05	Alu, Cod. ID PR 0EJ
2.0 FSI Eng.BVY/ BVZ (110kW)	07-				**PF870**	Bch	Ø 22,20	Alu
	06-				**CZ080**	Sachs	Ø 19,05	Alu, Cod. ID PR 0EJ
2.0 TDi Eng.BMM (103kW)	07-				**PF870**	Bch	Ø 22,20	Alu
	06-				**CZ080**	Sachs	Ø 19,05	Alu, Cod. ID PR 0EJ
2.0 TDi Eng.CFFA (100kW)	08-				**CZ080**	Sachs	Ø 19,05	Alu, Cod. ID PR 0EJ
2.0 TDI 16v Eng.CBAB/ CFFB (103kW)	09-				**CZ080**	Sachs	Ø 19,05	Alu, Cod. ID PR 0EJ
2.0 TFSI Eng.BWA/ CCTA/ CCZA (147kW)	07-				**PF870**	Bch	Ø 22,20	Alu
	06-				**CZ080**	Sachs	Ø 19,05	Alu, Cod. ID PR 0EJ
3.2 FSI Eng.BUB/ CBRA (184kW)	07-				**PF870**	Bch	Ø 22,20	Alu
	06-				**CZ080**	Sachs	Ø 19,05	Alu, Cod. ID PR 0EJ
3.6 V6 Eng.CDVA (191kW)	09-				**CZ080**	Sachs	Ø 19,05	Alu, Cod. ID PR 0EJ
Fox 1/87-1/91								
All models	87-91		R		**CF000**		Ø 17,46	

		Spare Parts	F/R	L/R	FRITECH ref.		DIMENSIONS mm.	NOTE
Fox (5Z1) 4/05-12/11								
1.0 Eng.AQZ/ BJE/ BNX (53kW)	05-				**PF887**	Bch	Ø 20,64	Alu, Cod. ID PR 1AC, +ABS
1.2 Eng.BMD (40kW)	05-		R		**CF239**		Ø 17,46	Alu
	05-				**PF887**	Bch	Ø 20,64	Alu, Cod. ID PR 1AC, +ABS
	05-				**PF463**	Fte	Ø 20,64	Alu, +ABS
	05-				**PF973**	Fte	Ø 20,64	Alu, +ABS, +PS
1.2 Eng.CHFA (44kW)	10-		R		**CF239**		Ø 17,46	Alu
	10-				**PF887**	Bch	Ø 20,64	Alu, Cod. ID PR 1AC, +ABS
	10-				**PF463**	Fte	Ø 20,64	Alu, +ABS
1.4 Eng.BKR (55kW)	05-		R		**CF239**		Ø 17,46	Alu
	05-				**PF887**	Bch	Ø 20,64	Alu, Cod. ID PR 1AC, +ABS
	05-				**PF463**	Fte	Ø 20,64	Alu, +ABS
	05-				**PF973**	Fte	Ø 20,64	Alu, +ABS, +PS
1.4 TDi Eng.BNM (51kW)	05-		R		**CF239**		Ø 17,46	Alu
	05-				**PF887**	Bch	Ø 20,64	Alu, Cod. ID PR 1AC, +ABS
	05-				**PF463**	Fte	Ø 20,64	Alu, +ABS
	05-				**PF973**	Fte	Ø 20,64	Alu, +ABS, +PS
1.6 Eng.BAH/ BLH/ BPA/ CCRA/ CFZA (73-74kW)	05-				**PF887**	Bch	Ø 20,64	Alu, Cod. ID PR 1AC, +ABS
Golf I (17, 155) 4/74-4/93								
1.1 Eng.FA/ GG (37kW)	74-73		R		**CF001**		Ø 14,29	
	74-83		R		**CF532**		Ø 14,29	Alu
	74-83		R		**CF000**		Ø 17,46	+CF
	4/74-10/83				**PF058**		Ø 20,64	+Servo
	4/74-10/83				**PF059**		Ø 20,64	+Servo
1.1 Eng.FJ (38kW)	81-83		R		**CF001**		Ø 14,29	
	81-83		R		**CF532**		Ø 14,29	Alu
	4/81-10/83				**PF058**		Ø 20,64	+Servo
	4/81-10/83				**PF059**		Ø 20,64	+Servo
1.1 Eng.HC (44kW)	81-83		R		**CF001**		Ø 14,29	
	81-83		R		**CF532**		Ø 14,29	Alu
1.3 Eng.GF (44kW)	79-83		R		**CF001**		Ø 14,29	
	79-83		R		**CF532**		Ø 14,29	Alu
	79-83				**PF058**		Ø 20,64	+Servo
	79-83				**PF059**		Ø 20,64	+Servo
1.3 Eng.GS (43kW)	82-83		R		**CF001**		Ø 14,29	
	82-83		R		**CF532**		Ø 14,29	Alu
1.3 Eng.HK (40kW)	83-86		R		**CF001**		Ø 14,29	
	83-86		R		**CF532**		Ø 14,29	Alu
1.5 Eng.FH (51kW)	74-75		R		**CF001**		Ø 14,29	M/T
	74-75		R		**CF532**		Ø 14,29	Alu, M/T
	74-75		R		**CF000**		Ø 17,46	A/T
	74-75		R		**CF239**		Ø 17,46	Alu, A/T
	74-75				**PF058**		Ø 20,64	+Servo
	74-75				**PF059**		Ø 20,64	+Servo
1.5 D Eng.CK (37kW)	8/76-7/80		R		**CF000**		Ø 17,46	A/T
	8/76-7/80				**PF058**		Ø 20,64	+Servo
	8/76-7/80				**PF059**		Ø 20,64	+Servo
1.6 Eng.EM (55kW)	79-83		R		**CF001**		Ø 14,29	Exc. Spain, M/T
	79-83		R		**CF532**		Ø 14,29	Alu, Exc. Spain, M/T
	79-83		R		**CF000**		Ø 17,46	Spain, A/T
	79-83		R		**CF239**		Ø 17,46	Alu, Spain, A/T
1.6 Eng.FP (55kW)	75-77		R		**CF001**		Ø 14,29	Exc. Spain, M/T
	75-77		R		**CF532**		Ø 14,29	Alu, Exc. Spain, M/T
	75-77		R		**CF000**		Ø 17,46	Spain, A/T
	75-77		R		**CF239**		Ø 17,46	Alu, Spain, A/T
	75-77				**PF058**		Ø 20,64	+Servo
	75-77				**PF059**		Ø 20,64	+Servo
1.6 Eng.FT/ EWA (51kW)	75-77		R		**CF001**		Ø 14,29	Exc. Spain, M/T
	75-77		R		**CF532**		Ø 14,29	Alu, Exc. Spain, M/T
	75-77		R		**CF000**		Ø 17,46	Spain, A/T
	75-77		R		**CF239**		Ø 17,46	Alu, Spain, A/T
1.6 Cabrio Eng.RE (53kW)	86-90		R		**CF532**		Ø 14,29	Ch -15e011290, Alu, -CF
	86-90		R		**CF001**		Ø 14,29	Ch -15E011291, -CF
	-7/92		R		**CF000**		Ø 17,46	Ch 15E011291

VOLKSWAGEN

		Spare Parts	F/R	L/R	FRITECH ref.		DIMENSIONS mm.	NOTE
1.6 Cabrio Eng.RE (53kW)	-90		R		**CF239**		Ø 17,46	Ch 15E011291, Alu
	86-90				**PF058**		Ø 20,64	+Servo
	86-90				**PF059**		Ø 20,64	+Servo
1.6 D Eng.CR/ JK (40kW)	80-83		R		**CF001**		Ø 14,29	M/T
	80-83		R		**CF532**		Ø 14,29	Alu, M/T
	8/80-10/83		R		**CF000**		Ø 17,46	A/T
	80-83		R		**CF239**		Ø 17,46	Alu, A/T
	8/80-10/83				**PF058**		Ø 20,64	+Servo
	8/80-10/83				**PF059**		Ø 20,64	+Servo
1.6 D (44kW)	82-84		R		**CF001**		Ø 14,29	M/T
	82-84		R		**CF532**		Ø 14,29	Alu, M/T
	1/82-12/89		R		**CF000**		Ø 17,46	A/T
	82-84		R		**CF239**		Ø 17,46	Alu, A/T
1.6 TD Eng.CY (51kW)	82-83		R		**CF001**		Ø 14,29	
	82-83		R		**CF532**		Ø 14,29	Alu
	82-83				**PF058**		Ø 20,64	+Servo
	82-83				**PF059**		Ø 20,64	+Servo
1.6, Cabrio Eng.EW/ HN (55kW)	83-92		R		**CF532**		Ø 14,29	Ch -15e011290, Alu, Only Cabrio, -CF
	83-92		R		**CF001**		Ø 14,29	Ch -15E011291, Only Cabrio, -CF
	83-92		R		**CF001**		Ø 14,29	Exc. Spain, M/T
	83-92		R		**CF532**		Ø 14,29	Alu, Exc. Spain, M/T
	83-		R		**CF239**		Ø 17,46	Ch -15E011290, Alu, Only Cabrio, +CF
	-83		R		**CF000**		Ø 17,46	Ch -15E011290, Only Cabrio, +CF
	-4/92		R		**CF000**		Ø 17,46	Ch 15E011291-, Only Cabrio
	-92		R		**CF239**		Ø 17,46	Ch 15E011291-, Alu, Only Cabrio
	73-92		R		**CF000**		Ø 17,46	Spain, A/T
	83-92		R		**CF239**		Ø 17,46	Alu, Spain, A/T
	83-92				**PF058**		Ø 20,64	+Servo
	83-92				**PF059**		Ø 20,64	+Servo
1.6, Cabrio, GTi Eng.EG (81kW)	76-82		R		**CF532**		Ø 14,29	Ch -15e011290, Alu, Only Cabrio, -CF
	76-82		R		**CF001**		Ø 14,29	Ch -15E011291, Only Cabrio, -CF
	76-82		R		**CF001**		Ø 14,29	Exc. Spain, M/T
	76-82		R		**CF532**		Ø 14,29	Alu, Exc. Spain, M/T
	79-82		R		**CF000**		Ø 17,46	Ch -15E011290, Only Cabrio, +CF
	-07/82		R		**CF000**		Ø 17,46	Ch 15E011291-, Only Cabrio
	76-82		R		**CF000**		Ø 17,46	Spain, A/T
	76-82		R		**CF239**		Ø 17,46	Alu, Spain, A/T
1.8 Cabrio Eng.2H (72kW)	-3/93		R		**CF239**		Ø 17,46	Ch 15E011291-, Alu
	89-93				**PF058**		Ø 20,64	+Servo
	89-93				**PF059**		Ø 20,64	+Servo
1.8 Cabrio Eng.EX (66kW)	83-92		R		**CF001**		Ø 14,29	Ch -15E011290, -CF
	83-92		R		**CF532**		Ø 14,29	Ch -15E011290, Alu, -CF
	83-		R		**CF000**		Ø 17,46	Ch -15E011290, +CF
	83-		R		**CF239**		Ø 17,46	Ch -15E011290, Alu, +CF
	-9/92		R		**CF000**		Ø 17,46	Ch 15E011291-
	-92		R		**CF239**		Ø 17,46	Ch 15E011291-, Alu
	83-92				**PF058**		Ø 20,64	+Servo
	83-92				**PF059**		Ø 20,64	+Servo
1.8 Cabrio Eng.JH (70kW)	83-93		R		**CF000**		Ø 17,46	Ch -15E011290, +CF
	83-93		R		**CF239**		Ø 17,46	Ch -15E011290, Alu, +CF
	-04/93		R		**CF239**		Ø 17,46	Ch 15E011291-, Alu
	-4/93		R		**CF000**		Ø 17,46	Ch 15E011291-
	83-93				**PF058**		Ø 20,64	+Servo
	83-93				**PF059**		Ø 20,64	+Servo
1.8 GTI Eng.DX/ EV/ PB (82kW)	82-89		R		**CF000**		Ø 17,46	
	82-89		R		**CF239**		Ø 17,46	Alu
1.8 GTI Cabrio Eng.DX/ EV/ PB (82kW)	82-89		R		**CF239**		Ø 17,46	Ch -15E011290, Alu, +CF
	-83		R		**CF000**		Ø 17,46	Ch -15E011290, +CF
	-12/89		R		**CF000**		Ø 17,46	Ch 15E011291-
	82-89		R		**CF239**		Ø 17,46	Ch 15E011291-, Alu
Golf II (19E, 1G1) 8/83-12/92								
1.0 Eng.GN (33kW)	83-85		R		**CF001**		Ø 14,29	-CF
	83-85		R		**CF532**		Ø 14,29	Alu, -CF
	83-85		R		**CF000**		Ø 17,46	+CF

		Spare Parts	F/R	L/R	FRITECH ref.		DIMENSIONS mm.	NOTE
1.0 Eng.GN (33kW)	83-85		R		**CF239**		Ø 17,46	Alu, +CF
	83-85				**PF005**		Ø 20,64	
1.0 Eng.HZ (37kW)	85-91		R		**CF001**		Ø 14,29	-CF
	85-91		R		**CF532**		Ø 14,29	Alu, -CF
	85-91		R		**CF000**		Ø 17,46	+CF
	85-91		R		**CF239**		Ø 17,46	Alu, +CF
	85-91				**PF005**		Ø 20,64	
1.3 Eng.GT (44kW)	83-86		R		**CF001**		Ø 14,29	-CF
	83-86		R		**CF532**		Ø 14,29	Alu, -CF
	83-86		R		**CF000**		Ø 17,46	+CF
	83-86		R		**CF239**		Ø 17,46	Alu, +CF
	83-86				**PF005**		Ø 20,64	
1.3 Eng.NU (37kW)	85-87		R		**CF001**		Ø 14,29	-CF
	85-87		R		**CF532**		Ø 14,29	Alu, -CF
	85-87		R		**CF000**		Ø 17,46	+CF
	85-87		R		**CF239**		Ø 17,46	Alu, +CF
	85-87				**PF005**		Ø 20,64	
1.3, Kat Eng.2G/ HK/ MH/ NZ (40kW)	8/83-92		R		**CF001**		Ø 14,29	-CF
	8/83-92		R		**CF532**		Ø 14,29	Alu, -CF
	83-92		R		**CF000**		Ø 17,46	+CF
	83-92		R		**CF239**		Ø 17,46	Alu, +CF
	8/83-92				**PF005**		Ø 20,64	
1.6 Eng.EZ/ HM (55kW)	83-91		R		**CF001**		Ø 14,29	-CF
	83-91		R		**CF532**		Ø 14,29	Alu, -CF
	83-91		R		**CF000**		Ø 17,46	+CF
	83-91		R		**CF239**		Ø 17,46	Alu, +CF
	83-91		R		**CF107**		Ø 19,05	Ch 1HS246941-, M/T
	83-91		R		**CF121**		Ø 19,05	Ch 1HS246941-, Alu, M/T
	8/83-91				**PF005**		Ø 20,64	
1.6 Eng.PN/ EZA (51kW)	86-92		R		**CF001**		Ø 14,29	-CF
	86-92		R		**CF532**		Ø 14,29	Alu, -CF
	86-92		R		**CF000**		Ø 17,46	+CF
	86-92		R		**CF239**		Ø 17,46	Alu, +CF
	86-92		R		**CF107**		Ø 19,05	Ch 1HS246941-, M/T
	86-92		R		**CF121**		Ø 19,05	Ch 1HS246941-, Alu, M/T
	86-92				**PF005**		Ø 20,64	
1.6 Eng.RF(KAT) (53kW)	86-91		R		**CF001**		Ø 14,29	-CF
	86-91		R		**CF532**		Ø 14,29	Alu, -CF
	86-91		R		**CF000**		Ø 17,46	+CF
	86-91		R		**CF239**		Ø 17,46	Alu, +CF
	86-91		R		**CF107**		Ø 19,05	Ch 1HS246941-, M/T
	86-91		R		**CF121**		Ø 19,05	Ch 1HS246941-, Alu, M/T
	86-91				**PF005**		Ø 20,64	
1.6 D Eng.CS (37kW)	83-91		R		**CF001**		Ø 14,29	-CF
	83-91		R		**CF532**		Ø 14,29	Alu, -CF
	83-91		R		**CF000**		Ø 17,46	+CF
	83-91		R		**CF239**		Ø 17,46	Alu, +CF
	8/89-91				**PF033**	Ate	Ø 20,64	-ABS
	8/83-7/89				**PF005**		Ø 20,64	
1.6 D Eng.JP/ ME (40kW)	83-91		R		**CF001**		Ø 14,29	-CF
	83-91		R		**CF532**		Ø 14,29	Alu, -CF
	83-91		R		**CF000**		Ø 17,46	+CF
	83-91		R		**CF239**		Ø 17,46	Alu, +CF
	8/89-91				**PF033**	Ate	Ø 20,64	-ABS
	8/83-7/89				**PF005**		Ø 20,64	
1.6 TD Eng.1V (44kW)	89-91		R		**CF001**		Ø 14,29	-CF
	89-91		R		**CF532**		Ø 14,29	Alu, -CF
	89-91		R		**CF000**		Ø 17,46	+CF
	89-91		R		**CF239**		Ø 17,46	Alu, +CF
1.6 TD Eng.JR/ MF (51kW)	83-91		R		**CF001**		Ø 14,29	-CF
	83-91		R		**CF532**		Ø 14,29	Alu, -CF
	83-91		R		**CF000**		Ø 17,46	+CF
	83-91		R		**CF239**		Ø 17,46	Alu, +CF
	8/89-91				**PF033**	Ate	Ø 20,64	-ABS

VOLKSWAGEN

		Spare Parts	F/R	L/R	FRITECH ref.		DIMENSIONS mm.	NOTE
1.6 TD Eng.JR/ MF (51kW)	8/83-7/89				**PF005**		Ø 20,64	
1.6 TD Eng.RA/ SB (59kW)	89-91		R		**CF001**		Ø 14,29	-CF
	89-91		R		**CF532**		Ø 14,29	Alu, -CF
	89-91		R		**CF000**		Ø 17,46	+CF
	89-91		R		**CF239**		Ø 17,46	Alu, +CF
1.6 TD (55kW)	83-85		R		**CF001**		Ø 14,29	-CF
	83-85		R		**CF532**		Ø 14,29	Alu, -CF
	83-85		R		**CF000**		Ø 17,46	+CF
	83-85		R		**CF239**		Ø 17,46	Alu, +CF
1.8 Eng.HV/ GU/ GX (66kW)	86-91		R		**CF001**		Ø 14,29	-CF
	86-91		R		**CF532**		Ø 14,29	Alu, -CF
	86-91		R		**CF000**		Ø 17,46	+CF
	86-91		R		**CF239**		Ø 17,46	Alu, +CF
	86-91		R		**CF107**		Ø 19,05	Ch 1HS246941-, M/T
	86-91		R		**CF121**		Ø 19,05	Ch 1HS246941-, Alu, M/T
	8/89-91				**PF033**	Ate	Ø 20,64	-ABS
	86-7/89				**PF005**		Ø 20,64	
1.8 Eng.RH (62kW)	86-90		R		**CF001**		Ø 14,29	-CF
	86-90		R		**CF532**		Ø 14,29	Alu, -CF
	86-90		R		**CF000**		Ø 17,46	+CF
	86-90		R		**CF239**		Ø 17,46	Alu, +CF
	86-90		R		**CF107**		Ø 19,05	Ch 1HS246941-, M/T
	86-90		R		**CF121**		Ø 19,05	Ch 1HS246941-, Alu, M/T
	8/89-90				**PF033**	Ate	Ø 20,64	-ABS
	86-7/89				**PF005**		Ø 20,64	
1.8 16v Eng.KR (102kW)	86-90		R		**CF001**		Ø 14,29	-CF
	86-90		R		**CF532**		Ø 14,29	Alu, -CF
	86-90		R		**CF000**		Ø 17,46	+CF
	86-90		R		**CF239**		Ø 17,46	Alu, +CF
	86-90		R		**CF107**		Ø 19,05	Ch 1HS246941-, M/T
	86-90		R		**CF121**		Ø 19,05	Ch 1HS246941-, Alu, M/T
	86-90				**CZ025**	Ate	Ø 23,81	Alu
	86-90				**CZ093**	Ate	Ø 23,81	
1.8 16v GTi Eng.PL (95kW)	86-91		R		**CF107**		Ø 19,05	Ch 1HS246941-, M/T
	86-91		R		**CF121**		Ø 19,05	Ch 1HS246941-, Alu, M/T
	-91				**PF039**	Luc	Ø 22,20	Ch 1GKB075001-, -ABS
	86-91				**CZ025**	Ate	Ø 23,81	Alu
	86-91				**CZ093**	Ate	Ø 23,81	
1.8 G60 Limited (155kW)	89-91		R		**CF107**		Ø 19,05	Ch 1HS246941-, M/T
	89-91		R		**CF121**		Ø 19,05	Ch 1HS246941-, Alu, M/T
1.8 G60, Syncro Eng.1H/ PG (118kW)	88-91		R		**CF001**		Ø 14,29	Exc. Syncro, -CF
	88-91		R		**CF532**		Ø 14,29	Alu, Exc. Syncro, -CF
	88-91		R		**CF000**		Ø 17,46	Exc. Syncro, +CF
	88-91		R		**CF239**		Ø 17,46	Alu, Exc. Syncro, +CF
	88-91		R		**CF107**		Ø 19,05	Ch 1HS246941-, Exc. Syncro, M/T
	88-91		R		**CF121**		Ø 19,05	Ch 1HS246941-, Alu, Exc. Syncro, M/T
	88-91		R		**CF107**		Ø 19,05	Ch -1HS400000, Syncro
	88-91		R		**CF121**		Ø 19,05	Ch -1HS400000, Alu, Syncro
	88-91		R		**CF537**		Ø 22,20	Ch 1HS400001-, Alu, Syncro
	88-91				**PF039**	Luc	Ø 22,20	-ABS
	88-91				**CZ025**	Ate	Ø 23,81	Alu
	88-91				**CZ093**	Ate	Ø 23,81	
1.8 GTI Eng.DX/ EV/ GZ/ PB (82kW)	83-91		R		**CF001**		Ø 14,29	-CF
	83-91		R		**CF532**		Ø 14,29	Alu, -CF
	83-91		R		**CF107**		Ø 19,05	Ch 1HS246941-, M/T
	83-91		R		**CF121**		Ø 19,05	Ch 1HS246941-, Alu, M/T
	-91				**PF039**	Luc	Ø 22,20	Ch 1GKB075001-, -ABS
	83-				**PF005**		Ø 20,64	Ch -1GKB075000
1.8 GTI Eng.HT (77kW)	1/85-7/85		R		**CF107**		Ø 19,05	Ch 1HS246941-, M/T
	1/85-7/85		R		**CF121**		Ø 19,05	Ch 1HS246941-, Alu, M/T
1.8 GTI, Kat Eng.PF/ RD (79kW)	85-91		R		**CF001**		Ø 14,29	-CF
	85-91		R		**CF532**		Ø 14,29	Alu, -CF
	85-91		R		**CF107**		Ø 19,05	Ch 1HS246941-, M/T
	85-91		R		**CF121**		Ø 19,05	Ch 1HS246941-, Alu, M/T

		Spare Parts	F/R	L/R	FRITECH ref.		DIMENSIONS mm.	NOTE
1.8 GTI, Kat Eng.PF/ RD (79kW)	-91				**PF039**	Luc	Ø 22,20	Ch 1GKB075001-, -ABS
	85-				**PF005**		Ø 20,64	Ch -1GKB075000
1.8 Syncro Eng.1P (72kW)	88-91		R		**CF107**		Ø 19,05	Ch -1HS400000
	88-91		R		**CF121**		Ø 19,05	Ch -1HS400000, Alu
	88-91		R		**CF537**		Ø 22,20	Ch 1HS400001-, Alu
	88-91				**PF005**		Ø 20,64	
1.8 Syncro Eng.GU/ GX (66kW)	86-91		R		**CF107**		Ø 19,05	Ch -1HS400000
	86-91		R		**CF121**		Ø 19,05	Ch -1HS400000, Alu
	86-91		R		**CF537**		Ø 22,20	Ch 1HS400001-, Alu
	86-91				**PF005**		Ø 20,64	
1.8, Syncro Eng.RP (66kW)	87-91		R		**CF001**		Ø 14,29	Exc. Syncro, -CF
	87-91		R		**CF532**		Ø 14,29	Alu, Exc. Syncro, -CF
	87-91		R		**CF000**		Ø 17,46	Exc. Syncro, +CF
	87-91		R		**CF239**		Ø 17,46	Alu, Exc. Syncro, +CF
	87-91		R		**CF107**		Ø 19,05	Ch 1HS246941-, Exc. Syncro, M/T
	87-91		R		**CF121**		Ø 19,05	Ch 1HS246941-, Alu, Exc. Syncro, M/T
	87-91		R		**CF107**		Ø 19,05	Ch -1HS400000, Syncro
	87-91		R		**CF121**		Ø 19,05	Ch -1HS400000, Alu, Syncro
	87-91		R		**CF537**		Ø 22,20	Ch 1HS400001-, Alu, Syncro
	8/89-91				**PF033**	Ate	Ø 20,64	-ABS
	86-7/89				**PF005**		Ø 20,64	
Golf III (1H1) 10/91-4/99								
1.4 Eng.ABD (40kW)	91-99		R		**CF080**		Ø 15,87	
	91-99		R		**CF725**		Ø 15,87	Alu
	-99				**PF310**	Ate	Ø 22,20	Ch 1S088705-, +ABS, RHD
	91-99				**PF549**	Ate	Ø 22,20	Ch 1SW385335-, Alu, +ABS
	11/91-6/94				**PF041**	Ate	Ø 20,64	-ABS
	11/91-6/94				**PF231**	Ate	Ø 20,64	Alu
	7/94-99				**PF039**	Luc	Ø 22,20	-ABS
	7/94-99				**PF248**	Luc	Ø 22,20	Alu, -ABS
1.4 Eng.AEX/ APQ (44kW)	91-99		R		**CF080**		Ø 15,87	
	91-99		R		**CF725**		Ø 15,87	Alu
	-8/99				**PF310**	Ate	Ø 22,20	Ch 1S088705-, +ABS, RHD
	91-99				**PF549**	Ate	Ø 22,20	Ch 1SW385335-, Alu, +ABS
	11/91-6/94				**PF041**	Ate	Ø 20,64	-ABS
	11/91-6/94				**PF231**	Ate	Ø 20,64	Alu
	7/94-99				**PF039**	Luc	Ø 22,20	-ABS
	7/94-99				**PF248**	Luc	Ø 22,20	Alu, -ABS
1.6 Eng.ABU (55kW)	92-		R		**CF000**		Ø 17,46	Ch -1HS246940
	92-		R		**CF239**		Ø 17,46	Ch -1HS246940, Alu
	-97		R		**CF107**		Ø 19,05	Ch 1HS246941-
	-97		R		**CF121**		Ø 19,05	Ch 1HS246941-, Alu
	-8/97				**PF310**	Ate	Ø 22,20	Ch 1S088705-, +ABS, RHD
	92-97				**PF549**	Ate	Ø 22,20	Ch 1SW385335-, Alu, +ABS
	-97				**PF041**	Ate	Ø 20,64	Ch 1HS246941-, -ABS
	-97				**PF231**	Ate	Ø 20,64	Ch 1HS246941-, Alu
1.6 Eng.AEA/ AEE (55kW)	92-		R		**CF000**		Ø 17,46	Ch -1HS246940
	92-		R		**CF239**		Ø 17,46	Ch -1HS246940, Alu
	-97		R		**CF107**		Ø 19,05	Ch 1HS246941-
	-97		R		**CF121**		Ø 19,05	Ch 1HS246941-, Alu
	-8/97				**PF310**	Ate	Ø 22,20	Ch 1S088705-, +ABS, RHD
	92-97				**PF549**	Ate	Ø 22,20	Ch 1SW385335-, Alu, +ABS
	-97				**PF041**	Ate	Ø 20,64	Ch 1HS246941-, -ABS
	-97				**PF231**	Ate	Ø 20,64	Ch 1HS246941-, Alu
1.6 GT (66kW)	91-		R		**CF080**		Ø 15,87	Ch -1HS246940, A/T
	91-		R		**CF725**		Ø 15,87	Ch -1HS246940, Alu, A/T
	91-99		R		**CF000**		Ø 17,46	M/T+A/T
	91-99		R		**CF239**		Ø 17,46	Alu, M/T+A/T
	-99		R		**CF107**		Ø 19,05	Ch 1HS246941-, M/T
	-99		R		**CF121**		Ø 19,05	Ch 1HS246941-, Alu, M/T
	91-94				**PF041**	Ate	Ø 20,64	Exc. Syncro, GT, Cabrio, -ABS
	91-94				**PF231**	Ate	Ø 20,64	Alu, Exc. Syncro, GT, Cabrio
	94-				**PF039**	Luc	Ø 22,20	Ch -SK016363, Cabrio, Syncro, GT, -ABS
	94-				**PF248**	Luc	Ø 22,20	Ch -SK016363, Alu, Cabrio, Syncro, GT, -ABS

VOLKSWAGEN

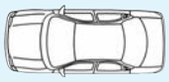		Spare Parts	F/R	L/R	FRITECH ref.		DIMENSIONS mm.	NOTE
1.6, Cabrio Eng.AEK/ AFT/ AKS (74kW)	94-		R		**CF000**		Ø 17,46	Ch -1HS246940
	94-		R		**CF239**		Ø 17,46	Ch -1HS246940, Alu
	-97		R		**CF107**		Ø 19,05	Ch 1HS246941-
	-99		R		**CF121**		Ø 19,05	Ch 1HS246941-, Alu
	94-				**PF609**	Ate	Ø 23,81	Ch -1HZS088704, +ABS
	-99				**PF493**	Ate	Ø 23,81	Ch 1HZS088705-, Alu, +ABS
	94-99				**PF039**	Luc	Ø 22,20	-ABS
	94-99				**PF248**	Luc	Ø 22,20	Alu, -ABS
1.8 Eng.AAM (55kW)	91-		R		**CF080**		Ø 15,87	Ch -1HS246940, A/T
	91-		R		**CF725**		Ø 15,87	Ch -1HS246940, Alu, A/T
	91-99		R		**CF000**		Ø 17,46	Ch -1HS246940, M/T
	91-99		R		**CF239**		Ø 17,46	Ch -1HS246940, Alu, M/T
	91-99		R		**CF000**		Ø 17,46	Ch 1HS246941-, A/T
	91-99		R		**CF239**		Ø 17,46	Ch 1HS246941-, Alu, A/T
	-99		R		**CF107**		Ø 19,05	Ch 1HS246941-, M/T
	-99		R		**CF121**		Ø 19,05	Ch 1HS246941-, Alu, M/T
	91-99				**PF549**	Ate	Ø 22,20	Ch 1SW385335-, Alu, +ABS
	91-99				**PF041**	Ate	Ø 20,64	Exc. Cabrio, -ABS
	91-99				**PF231**	Ate	Ø 20,64	Alu, Exc. Cabrio
	91-97				**PZ061**	Ate	Ø 19,05	
1.8 Eng.ABS/ ADZ (66kW)	91-		R		**CF080**		Ø 15,87	Ch -1HS246940, A/T
	91-		R		**CF725**		Ø 15,87	Ch -1HS246940, Alu, A/T
	91-99		R		**CF239**		Ø 17,46	Ch -1HS246940, Alu, M/T
	-99		R		**CF000**		Ø 17,46	Ch -1HS246940, M/T
	91-99		R		**CF239**		Ø 17,46	Ch 1HS246941-, Alu, A/T
	-99		R		**CF000**		Ø 17,46	Ch 1HS246941-, A/T
	-99		R		**CF107**		Ø 19,05	Ch 1HS246941-, M/T
	-99		R		**CF121**		Ø 19,05	Ch 1HS246941-, Alu, M/T
	91-99				**PF549**	Ate	Ø 22,20	Ch 1SW385335-, Alu, +ABS
	91-94				**PF041**	Ate	Ø 20,64	-ABS
	91-94				**PF231**	Ate	Ø 20,64	Alu
1.8 Cabrio Eng.AAM (55kW)	91-		R		**CF080**		Ø 15,87	Ch -1HS246940, A/T
	91-		R		**CF725**		Ø 15,87	Ch -1HS246940, Alu, A/T
	91-99		R		**CF000**		Ø 17,46	Ch -1HS246940, M/T
	91-99		R		**CF239**		Ø 17,46	Ch -1HS246940, Alu, M/T
	91-99		R		**CF000**		Ø 17,46	Ch 1HS246941-, A/T
	91-99		R		**CF239**		Ø 17,46	Ch 1HS246941-, Alu, A/T
	-99		R		**CF107**		Ø 19,05	Ch 1HS246941-, M/T
	-99		R		**CF121**		Ø 19,05	Ch 1HS246941-, Alu, M/T
	91-99				**PF549**	Ate	Ø 22,20	Ch 1SW385335-, Alu, +ABS
1.8 Cabrio Eng.ABS/ ADZ (66kW)	91-		R		**CF080**		Ø 15,87	Ch -1HS246940, A/T
	91-		R		**CF725**		Ø 15,87	Ch -1HS246940, Alu, A/T
	91-99		R		**CF000**		Ø 17,46	Ch -1HS246940, M/T
	91-99		R		**CF239**		Ø 17,46	Ch -1HS246940, Alu, M/T
	91-99		R		**CF000**		Ø 17,46	Ch 1HS246941-, A/T
	91-99		R		**CF239**		Ø 17,46	Ch 1HS246941-, Alu, A/T
	-99		R		**CF107**		Ø 19,05	Ch 1HS246941-, M/T
	-99		R		**CF121**		Ø 19,05	Ch 1HS246941-, Alu, M/T
	91-99				**PF549**	Ate	Ø 22,20	Ch 1SW385335-, Alu, +ABS
	94-				**PF039**	Luc	Ø 22,20	-ABS
	94-				**PF248**	Luc	Ø 22,20	Alu, -ABS
	91-97				**PZ061**	Ate	Ø 19,05	
1.8 GT Eng.ABS/ ACC/ ADZ (66kW)	91-		R		**CF080**		Ø 15,87	Ch -1HS246940, A/T
	91-		R		**CF725**		Ø 15,87	Ch -1HS246940, Alu, A/T
	91-99		R		**CF000**		Ø 17,46	M/T+A/T
	91-99		R		**CF239**		Ø 17,46	Alu, M/T+A/T
	-99		R		**CF107**		Ø 19,05	Ch 1HS246941-, M/T
	-99		R		**CF121**		Ø 19,05	Ch 1HS246941-, Alu, M/T
	91-99				**PF549**	Ate	Ø 22,20	Ch 1SW385335-, Alu, +ABS
	91-				**PF609**	Ate	Ø 23,81	Ch -1HZS088704, +ABS
	-99				**PF493**	Ate	Ø 23,81	Ch 1HZS088705-, Alu, +ABS
	94-				**PF039**	Luc	Ø 22,20	Ch -SK016363, -ABS
	94-				**PF248**	Luc	Ø 22,20	Ch -SK016363, Alu, -ABS

		Spare Parts	F/R	L/R	FRITECH ref.		DIMENSIONS mm.	NOTE
1.8 Syncro Eng.ADZ (66kW)	91-99		R		**CF107**		Ø 19,05	Ch -1HS246940
	91-99		R		**CF121**		Ø 19,05	Ch -1HS246940, Alu
	91-99		R		**CF537**		Ø 22,20	Ch 1HS400001-, Alu
	91-99				**PF549**	Ate	Ø 22,20	Ch 1SW385335-, Alu, +ABS
	-8/97				**PF493**	Ate	Ø 23,81	Ch 1HZS088705-, Alu, +ABS
	91-99				**PF039**	Luc	Ø 22,20	-ABS
	91-99				**PF248**	Luc	Ø 22,20	Alu, -ABS
	1/93-8/97				**CZ025**	Ate	Ø 23,81	Alu
	1/93-8/97				**CZ093**	Ate	Ø 23,81	
	91-97				**PZ061**	Ate	Ø 19,05	
1.9 D Eng.1Y (48kW)	91-		R		**CF080**		Ø 15,87	Ch -1HS246940
	91-		R		**CF725**		Ø 15,87	Ch -1HS246940, Alu
	-99		R		**CF000**		Ø 17,46	Ch 1HS246941-
	-99		R		**CF239**		Ø 17,46	Ch 1HS246941-, Alu
	-99				**PF310**	Ate	Ø 22,20	Ch 1S088705-, +ABS, RHD
	91-99				**PF549**	Ate	Ø 22,20	Ch 1SW385335-, Alu, +ABS
	91-99				**PF041**	Ate	Ø 20,64	-ABS
	91-99				**PF231**	Ate	Ø 20,64	Alu, -ABS
1.9 SDi Eng.AEY (47kW)	97-		R		**CF080**		Ø 15,87	Ch -1HS246940
	97-		R		**CF725**		Ø 15,87	Ch -1HS246940, Alu
	-99		R		**CF000**		Ø 17,46	Ch 1HS246941-
	-99		R		**CF239**		Ø 17,46	Ch 1HS246941-, Alu
	-99				**PF310**	Ate	Ø 22,20	Ch 1S088705-, +ABS, RHD
	97-99				**PF041**	Ate	Ø 20,64	-ABS
	97-99				**PF231**	Ate	Ø 20,64	Alu, -ABS
	-8/97				**PZ150**	Fte	Ø 15,87	
1.9 TD Eng.AAZ (55kW)	91-99		R		**CF080**		Ø 15,87	
	91-99		R		**CF725**		Ø 15,87	Alu
	-99				**PF310**	Ate	Ø 22,20	Ch 1S088705-, +ABS, RHD
	91-99				**PF549**	Ate	Ø 22,20	Ch 1SW385335-, Alu, +ABS
	91-99				**PF041**	Ate	Ø 20,64	-ABS
	91-99				**PF231**	Ate	Ø 20,64	Alu, -ABS
1.9 TDi Eng.1Z (66kW)	93-99		R		**CF000**		Ø 17,46	
	93-99		R		**CF239**		Ø 17,46	Alu
	93-				**PF609**	Ate	Ø 23,81	Ch -1HZS088704, +ABS
	-99				**PF493**	Ate	Ø 23,81	Ch 1HZS088705-, Alu, +ABS
	93-99				**PF039**	Luc	Ø 22,20	-ABS
	93-99				**PF248**	Luc	Ø 22,20	Alu, -ABS
	93-99				**CZ025**	Ate	Ø 23,81	Alu
	93-99				**CZ093**	Ate	Ø 23,81	
	93-97				**PZ061**	Ate	Ø 19,05	
1.9 TDi Eng.AFN (81kW)	96-99				**PF493**	Ate	Ø 23,81	Alu, +ABS
	96-99				**PF039**	Luc	Ø 22,20	-ABS
	96-99				**PF248**	Luc	Ø 22,20	Alu, -ABS
	96-97				**PZ061**	Ate	Ø 19,05	
1.9 TDi Eng.AHU/ ALE (66kW)	93-99		R		**CF000**		Ø 17,46	
	93-99		R		**CF239**		Ø 17,46	Alu
	93-				**PF609**	Ate	Ø 23,81	Ch -1HZS088704, +ABS
	-99				**PF493**	Ate	Ø 23,81	Ch 1HZS088705-, Alu, +ABS
	93-99				**PF039**	Luc	Ø 22,20	-ABS
	93-99				**PF248**	Luc	Ø 22,20	Alu, -ABS
	93-99				**CZ025**	Ate	Ø 23,81	Alu
	93-99				**CZ093**	Ate	Ø 23,81	
	93-97				**PZ061**	Ate	Ø 19,05	
1.9 TDi Cabrio Eng.1Z (66kW)	93-99		R		**CF000**		Ø 17,46	
	93-99		R		**CF239**		Ø 17,46	Alu
	93-				**PF609**	Ate	Ø 23,81	+ABS
	-99				**PF493**	Ate	Ø 23,81	Alu, +ABS
	93-99				**PF039**	Luc	Ø 22,20	-ABS
	93-99				**PF248**	Luc	Ø 22,20	Alu, -ABS
	93-99				**CZ025**	Ate	Ø 23,81	Alu
	93-99				**CZ093**	Ate	Ø 23,81	
	93-97				**PZ061**	Ate	Ø 19,05	

VOLKSWAGEN

		Spare Parts	F/R	L/R	FRITECH ref.		DIMENSIONS mm.	NOTE
1.9 TDi Cabrio Eng.AFN (81kW)	96-99				**PF493**	Ate	Ø 23,81	Alu, +ABS
	96-99				**PF039**	Luc	Ø 22,20	-ABS
	96-99				**PF248**	Luc	Ø 22,20	Alu, -ABS
	96-97				**PZ061**	Ate	Ø 19,05	
1.9 TDi Cabrio Eng.AHU/ ALE (66kW)	93-99		R		**CF000**		Ø 17,46	
	93-99		R		**CF239**		Ø 17,46	Alu
	93-				**PF609**	Ate	Ø 23,81	+ABS
	-99				**PF493**	Ate	Ø 23,81	Alu, +ABS
	93-99				**PF039**	Luc	Ø 22,20	-ABS
	93-99				**PF248**	Luc	Ø 22,20	Alu, -ABS
	93-99				**CZ025**	Ate	Ø 23,81	Alu
	93-99				**CZ093**	Ate	Ø 23,81	
	93-97				**PZ061**	Ate	Ø 19,05	
1.9 TDi Syncro Eng.1Z (66kW)	93-99		R		**CF000**		Ø 17,46	
	93-99		R		**CF239**		Ø 17,46	Alu
	93-99				**PF493**	Ate	Ø 23,81	Alu, +ABS
	93-99				**PF039**	Luc	Ø 22,20	-ABS
	93-99				**PF248**	Luc	Ø 22,20	Alu, -ABS
	93-99				**CZ025**	Ate	Ø 23,81	Alu
	93-99				**CZ093**	Ate	Ø 23,81	
	93-97				**PZ061**	Ate	Ø 19,05	
1.9 TDi Syncro Eng.AHU/ ALE (66kW)	93-99		R		**CF000**		Ø 17,46	
	93-99		R		**CF239**		Ø 17,46	Alu
	93-99				**PF493**	Ate	Ø 23,81	Alu, +ABS
	93-99				**PF039**	Luc	Ø 22,20	-ABS
	93-99				**PF248**	Luc	Ø 22,20	Alu, -ABS
	93-99				**CZ025**	Ate	Ø 23,81	Alu
	93-99				**CZ093**	Ate	Ø 23,81	
	93-97				**PZ061**	Ate	Ø 19,05	
2.0 Eng.2E (85kW)	91-		R		**CF000**		Ø 17,46	Ch -1SK016363
	91-		R		**CF239**		Ø 17,46	Ch -1SK016363, Alu
	91-				**PF609**	Ate	Ø 23,81	Ch -1HZS088704, +ABS
	-8/97				**PF493**	Ate	Ø 23,81	Ch 1HZS088705-, Alu, +ABS
	91-99				**PF039**	Luc	Ø 22,20	-ABS
	91-99				**PF248**	Luc	Ø 22,20	Alu, -ABS
	91-97				**PZ061**	Ate	Ø 19,05	
2.0 Eng.ADY/ AGG/ AKR (85kW)	91-		R		**CF000**		Ø 17,46	Ch -1SK016363
	91-		R		**CF239**		Ø 17,46	Ch -1SK016363, Alu
	91-				**PF609**	Ate	Ø 23,81	Ch -1HZS088704, +ABS
	-8/97				**PF493**	Ate	Ø 23,81	Ch 1HZS088705-, Alu, +ABS
	91-99				**PF039**	Luc	Ø 22,20	-ABS
	91-99				**PF248**	Luc	Ø 22,20	Alu, -ABS
	91-97				**PZ061**	Ate	Ø 19,05	
2.0 Cabrio Eng.2E (85kW)	91-		R		**CF000**		Ø 17,46	
	91-		R		**CF239**		Ø 17,46	Alu
	-8/97				**PF493**	Ate	Ø 23,81	Alu, +ABS
	91-				**PF609**	Ate	Ø 23,81	+ABS
	91-99				**PF039**	Luc	Ø 22,20	-ABS
	91-99				**PF248**	Luc	Ø 22,20	Alu, -ABS
	91-97				**PZ061**	Ate	Ø 19,05	
2.0 Cabrio Eng.ADY/ AGG/ AKR (85kW)	91-		R		**CF000**		Ø 17,46	
	91-		R		**CF239**		Ø 17,46	Alu
	-8/97				**PF493**	Ate	Ø 23,81	Alu, +ABS
	91-				**PF609**	Ate	Ø 23,81	+ABS
	91-99				**PF039**	Luc	Ø 22,20	-ABS
	91-99				**PF248**	Luc	Ø 22,20	Alu, -ABS
	91-97				**PZ061**	Ate	Ø 19,05	
2.0 GTi 16v Eng.ABF (110kW)	94-				**PF609**	Ate	Ø 23,81	Ch -1HZS088704, +ABS
	-8/97				**PF493**	Ate	Ø 23,81	Ch 1HZS088705-, Alu, +ABS
	8/92-97				**PF039**	Luc	Ø 22,20	-ABS
	92-97				**PF248**	Luc	Ø 22,20	Alu, -ABS
	8/92-8/97				**CZ025**	Ate	Ø 23,81	Alu
	8/92-8/97				**CZ093**	Ate	Ø 23,81	
	92-97				**PZ061**	Ate	Ø 19,05	

		Spare Parts	F/R	L/R	FRITECH ref.		DIMENSIONS mm.	NOTE
2.0 Syncro Eng.2E (85kW)	91-		R		**CF000**		Ø 17,46	Ch -1SK016363
	91-		R		**CF239**		Ø 17,46	Ch -1SK016363, Alu
	91-99				**PF493**	Ate	Ø 23,81	Alu, +ABS
	91-99				**PF039**	Luc	Ø 22,20	-ABS
	91-99				**PF248**	Luc	Ø 22,20	Alu, -ABS
	91-97				**PZ061**	Ate	Ø 19,05	
2.0 Syncro Eng.ADY/ AGG/ AKR (85kW)	91-		R		**CF000**		Ø 17,46	Ch -1SK016363
	91-		R		**CF239**		Ø 17,46	Ch -1SK016363, Alu
	91-99				**PF493**	Ate	Ø 23,81	Alu, +ABS
	91-99				**PF039**	Luc	Ø 22,20	-ABS
	91-99				**PF248**	Luc	Ø 22,20	Alu, -ABS
	91-97				**PZ061**	Ate	Ø 19,05	
2.8 VR6 Eng.AAA (120-128kW)	92-				**PF609**	Ate	Ø 23,81	Ch -1HZS088704, +ABS
	-8/97				**PF493**	Ate	Ø 23,81	Ch 1HZS088705-, Alu, +ABS
	1/92-8/97				**CZ025**	Ate	Ø 23,81	Alu
	1/92-8/97				**CZ093**	Ate	Ø 23,81	
	92-97				**PZ061**	Ate	Ø 19,05	
2.9 VR6 Eng.ABV (140kW)	94-99				**CZ025**	Ate	Ø 23,81	Alu
	94-99				**CZ093**	Ate	Ø 23,81	
	94-97				**PZ061**	Ate	Ø 19,05	
2.9 VR6 Syncro Eng.ABV (140kW)	94-				**PF609**	Ate	Ø 23,81	Ch -1HZS088704, +ABS
	-99				**PF493**	Ate	Ø 23,81	Ch 1HZS088705-, Alu, +ABS
	94-99				**CZ025**	Ate	Ø 23,81	Alu
	94-99				**CZ093**	Ate	Ø 23,81	
	94-97				**PZ061**	Ate	Ø 19,05	
Golf III (1H5) Variant 10/91-4/99								
1.4 Eng.ABD (40kW)	91-		R		**CF107**		Ø 19,05	
	91-		R		**CF121**		Ø 19,05	Alu
	-4/99				**PF310**	Ate	Ø 22,20	Ch 1S088705-, +ABS, RHD
	91-99				**PF549**	Ate	Ø 22,20	Ch 1SW385335-, Alu, +ABS
	91-				**PF041**	Ate	Ø 20,64	-ABS
	91-				**PF231**	Ate	Ø 20,64	Alu, -ABS
1.4 Eng.AEX/ APQ (44kW)	91-		R		**CF107**		Ø 19,05	
	91-		R		**CF121**		Ø 19,05	Alu
	-4/99				**PF310**	Ate	Ø 22,20	Ch 1S088705-, +ABS, RHD
	91-99				**PF549**	Ate	Ø 22,20	Ch 1SW385335-, Alu, +ABS
	91-				**PF041**	Ate	Ø 20,64	-ABS
	91-				**PF231**	Ate	Ø 20,64	Alu, -ABS
1.6 Eng.ABU (55kW)	92-97		R		**CF107**		Ø 19,05	
	92-97		R		**CF121**		Ø 19,05	Alu
	92-97				**PF549**	Ate	Ø 22,20	Ch 1SW385335-, Alu, +ABS
	-99				**PF493**	Ate	Ø 23,81	Ch 1HZSW385335-, Alu, +ABS
	7/94-97				**PF039**	Luc	Ø 22,20	-ABS
	7/94-97				**PF248**	Luc	Ø 22,20	Alu, -ABS
1.6 Eng.AEA/ AEE (55kW)	92-97		R		**CF107**		Ø 19,05	
	92-97		R		**CF121**		Ø 19,05	Alu
	92-97				**PF549**	Ate	Ø 22,20	Ch 1SW385335-, Alu, +ABS
	-99				**PF493**	Ate	Ø 23,81	Ch 1HZSW385335-, Alu, +ABS
	7/94-97				**PF039**	Luc	Ø 22,20	-ABS
	7/94-97				**PF248**	Luc	Ø 22,20	Alu, -ABS
1.6 Eng.AEK/ AFT/ AKS (74kW)	94-		R		**CF107**		Ø 19,05	
	94-		R		**CF121**		Ø 19,05	Alu
	94-				**PF609**	Ate	Ø 23,81	Ch -1HZSW385334, +ABS
	-99				**PF493**	Ate	Ø 23,81	Ch 1HZSW385335-, Alu, +ABS
	94-99				**PF039**	Luc	Ø 22,20	-ABS
	94-99				**PF248**	Luc	Ø 22,20	Alu, -ABS
1.8 Eng.AAM (55kW)	91-99		R		**CF107**		Ø 19,05	
	91-99		R		**CF121**		Ø 19,05	Alu
	91-99				**PF549**	Ate	Ø 22,20	Ch 1SW385335-, Alu, +ABS
	91-				**PF609**	Ate	Ø 23,81	Ch -1HZSW385334, +ABS
	-99				**PF493**	Ate	Ø 23,81	Ch 1HZSW385335-, Alu, +ABS
	91-99				**PF039**	Luc	Ø 22,20	-ABS
	91-99				**PF248**	Luc	Ø 22,20	Alu, -ABS

VOLKSWAGEN

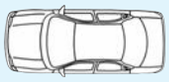		Spare Parts	F/R	L/R	FRITECH ref.		DIMENSIONS mm.	NOTE
1.8 Eng.ABS/ ADZ (66kW)	91-99		R		**CF107**		Ø 19,05	
	91-99		R		**CF121**		Ø 19,05	Alu
	91-99				**PF549**	Ate	Ø 22,20	Ch 1SW385335-, Alu, +ABS
	91-				**PF609**	Ate	Ø 23,81	Ch -1HZSW385334, +ABS
	-99				**PF493**	Ate	Ø 23,81	Ch 1HZSW385335-, Alu, +ABS
	-99				**PF039**	Luc	Ø 22,20	Ch 1S400001-, -ABS
	-99				**PF248**	Luc	Ø 22,20	Ch 1S400001-, Alu, -ABS
	91-97				**PZ061**	Ate	Ø 19,05	
1.8 Syncro Eng.ABS/ ADZ (66kW)	-99		R		**CF537**		Ø 22,20	Ch 1S400001-, Alu, 4WD
	91-99				**PF549**	Ate	Ø 22,20	Ch 1SW385335-, Alu, +ABS
	-99				**PF493**	Ate	Ø 23,81	Ch 1HZSW385335-, Alu, +ABS
	-99				**PF039**	Luc	Ø 22,20	Ch 1S400001-, -ABS
	-99				**PF248**	Luc	Ø 22,20	Ch 1S400001-, Alu, -ABS
	91-97				**PZ061**	Ate	Ø 19,05	
1.9 D Eng.1Y (48kW)	91-99		R		**CF107**		Ø 19,05	
	91-99		R		**CF121**		Ø 19,05	Alu
	-4/99				**PF310**	Ate	Ø 22,20	Ch 1S088705-, +ABS, RHD
	91-99				**PF549**	Ate	Ø 22,20	Ch 1SW385335-, Alu, +ABS
	91-99				**PF039**	Luc	Ø 22,20	-ABS
	91-99				**PF248**	Luc	Ø 22,20	Alu, -ABS
1.9 SDi Eng.AEY (47kW)	97-99		R		**CF107**		Ø 19,05	
	97-99		R		**CF121**		Ø 19,05	Alu
	-4/99				**PF310**	Ate	Ø 22,20	Ch 1S088705-, +ABS, RHD
	97-99				**PF549**	Ate	Ø 22,20	Ch 1SW385335-, Alu, +ABS
	97-99				**PF039**	Luc	Ø 22,20	-ABS
	97-99				**PF248**	Luc	Ø 22,20	Alu, -ABS
	97-				**PZ150**	Fte	Ø 15,87	
1.9 TD Eng.AAZ (55kW)	91-99		R		**CF107**		Ø 19,05	
	91-99		R		**CF121**		Ø 19,05	Alu
	-4/99				**PF310**	Ate	Ø 22,20	Ch 1S088705-, +ABS, RHD
	91-99				**PF549**	Ate	Ø 22,20	Ch 1SW385335-, Alu, +ABS
	91-99				**PF039**	Luc	Ø 22,20	-ABS
	91-99				**PF248**	Luc	Ø 22,20	Alu, -ABS
1.9 TDi Eng.1Z (66kW)	93-99		R		**CF107**		Ø 19,05	
	93-99		R		**CF121**		Ø 19,05	Alu
	93-				**PF609**	Ate	Ø 23,81	Ch -1HZSW385334, +ABS
	-99				**PF493**	Ate	Ø 23,81	Ch 1HZSW385335-, Alu, +ABS
	93-99				**PF039**	Luc	Ø 22,20	-ABS
	93-99				**PF248**	Luc	Ø 22,20	Alu, -ABS
	93-97				**PZ061**	Ate	Ø 19,05	
1.9 TDi Eng.AFN (81kW)	96-99				**PF493**	Ate	Ø 23,81	Alu, +ABS
	96-99				**PF039**	Luc	Ø 22,20	-ABS
	96-99				**PF248**	Luc	Ø 22,20	Alu, -ABS
	96-97				**PZ061**	Ate	Ø 19,05	
1.9 TDi Eng.AHU/ ALE (66kW)	93-99		R		**CF107**		Ø 19,05	
	93-99		R		**CF121**		Ø 19,05	Alu
	93-				**PF609**	Ate	Ø 23,81	Ch -1HZSW385334, +ABS
	-99				**PF493**	Ate	Ø 23,81	Ch 1HZSW385335-, Alu, +ABS
	93-99				**PF039**	Luc	Ø 22,20	-ABS
	93-99				**PF248**	Luc	Ø 22,20	Alu, -ABS
	93-97				**PZ061**	Ate	Ø 19,05	
1.9 TDi Syncro Eng.1Z (66kW)	93-99		R		**CF537**		Ø 22,20	Alu, 4WD
	-99				**PF493**	Ate	Ø 23,81	Ch 1HZSW385335-, Alu, +ABS
	93-99				**PF039**	Luc	Ø 22,20	-ABS
	93-99				**PF248**	Luc	Ø 22,20	Alu, -ABS
	93-97				**PZ061**	Ate	Ø 19,05	
1.9 TDi Syncro Eng.AHU/ ALE (66kW)	93-99		R		**CF537**		Ø 22,20	Alu, 4WD
	-99				**PF493**	Ate	Ø 23,81	Ch 1HZSW385335-, Alu, +ABS
	93-99				**PF039**	Luc	Ø 22,20	-ABS
	93-99				**PF248**	Luc	Ø 22,20	Alu, -ABS
	93-97				**PZ061**	Ate	Ø 19,05	
2.0 Eng.2E (85kW)	91-99		R		**CF107**		Ø 19,05	
	91-99		R		**CF121**		Ø 19,05	Alu
	91-				**PF609**	Ate	Ø 23,81	Ch -1HZSW385334, +ABS

		Spare Parts	F/R	L/R	FRITECH ref.		DIMENSIONS mm.	NOTE
2.0 Eng.2E (85kW)	-99				**PF493**	Ate	Ø 23,81	Ch 1HZSW385335-, Alu, +ABS
	91-99				**PF039**	Luc	Ø 22,20	-ABS
	91-99				**PF248**	Luc	Ø 22,20	Alu, -ABS
	91-97				**PZ061**	Ate	Ø 19,05	
2.0 Eng.ADY/ AGG/ AKR (85kW)	91-99		R		**CF107**		Ø 19,05	
	91-99		R		**CF121**		Ø 19,05	Alu
	91-				**PF609**	Ate	Ø 23,81	Ch -1HZSW385334, +ABS
	-99				**PF493**	Ate	Ø 23,81	Ch 1HZSW385335-, Alu, +ABS
	91-99				**PF039**	Luc	Ø 22,20	-ABS
	91-99				**PF248**	Luc	Ø 22,20	Alu, -ABS
	91-97				**PZ061**	Ate	Ø 19,05	
2.0 Syncro Eng.2E (85kW)	91-99		R		**CF537**		Ø 22,20	Alu, 4WD
	-99				**PF493**	Ate	Ø 23,81	Ch 1HZSW385335-, Alu, +ABS
	91-99				**PF039**	Luc	Ø 22,20	-ABS
	91-99				**PF248**	Luc	Ø 22,20	Alu, -ABS
	91-97				**PZ061**	Ate	Ø 19,05	
2.0 Syncro Eng.ADY/ AGG/ AKR (85kW)	91-99		R		**CF537**		Ø 22,20	Alu, 4WD
	-99				**PF493**	Ate	Ø 23,81	Ch 1HZSW385335-, Alu, +ABS
	91-99				**PF039**	Luc	Ø 22,20	-ABS
	91-99				**PF248**	Luc	Ø 22,20	Alu, -ABS
	91-97				**PZ061**	Ate	Ø 19,05	
2.9 VR6 Eng.ABV (140kW)	94-97				**PZ061**	Ate	Ø 19,05	
2.9 VR6 Syncro Eng.ABV (140kW)	94-				**PF609**	Ate	Ø 23,81	Ch -1HZSW385334, +ABS
	-99				**PF493**	Ate	Ø 23,81	Ch 1HZSW385335-, Alu, +ABS
	94-97				**PZ061**	Ate	Ø 19,05	
Golf IV (1J1, 5), Variant 8/97-9/03								
1.4 16v Eng.AHW/ AKQ/ APE/ AXP/ BCA (55kW)	00-				**PF799**	Ate	Ø 23,81	Alu, +ESP
	10/98-00				**PF241**	Ate	Ø 23,81	Alu, +ESP
	10/98-10/03				**PF818**	Bch	Ø 23,81	Alu, -ESP, RHD
	10/98-10/03				**PF234**		Ø 23,81	-ESP
	97-03				**CZ081**	Fte	Ø 23,81	Alu
	97-03				**CZ026**		Ø 23,81	Pla
	97-				**PZ064**	Sachs	Ø 15,87	Pla
	97-				**PZ107**	Sachs	Ø 15,87	
1.6 Eng.AEH/ AKL/ APF (74kW)	97-00				**CZ081**	Fte	Ø 23,81	Alu
	97-00				**CZ026**		Ø 23,81	Pla
	97-00				**PZ064**	Sachs	Ø 15,87	Pla
	97-00				**PZ107**	Sachs	Ø 15,87	
1.6 Eng.AVU/ BFQ (75kW)	00-03				**PF241**	Ate	Ø 23,81	Alu, +ESP
	00-03				**PF799**	Ate	Ø 23,81	Alu, +ESP
	00-03				**PF818**	Bch	Ø 23,81	Alu, -ESP, RHD
	00-03				**PF234**		Ø 23,81	-ESP
	00-03				**CZ081**	Fte	Ø 23,81	Alu
	00-03				**CZ026**		Ø 23,81	Pla
	00-03				**PZ064**	Sachs	Ø 15,87	Pla
	00-03				**PZ107**	Sachs	Ø 15,87	
1.6 16v Eng.ATN/ AUS/ AZD/ BCB (77kW)	00-03				**PF799**	Ate	Ø 23,81	Alu, +ESP
	00-03				**PF818**	Bch	Ø 23,81	Alu, -ESP, RHD
	00-03				**PF234**		Ø 23,81	-ESP
	00-03				**CZ081**	Fte	Ø 23,81	Alu
	00-03				**CZ026**		Ø 23,81	Pla
	00-03				**PZ064**	Sachs	Ø 15,87	Pla
	00-03				**PZ107**	Sachs	Ø 15,87	
1.6 Cabrio Eng.AFT/ AKS (74kW)	97-				**PF609**	Ate	Ø 23,81	Ch -1EZS021846, +ABS
	-00				**PF493**	Ate	Ø 23,81	Ch 1EZS021847-, Alu, +ABS
	97-00				**CZ081**	Fte	Ø 23,81	Alu
	8/97-2/00				**CZ076**		Ø 19,05	
	97-00				**CZ026**		Ø 23,81	Pla
	97-00				**PZ064**	Sachs	Ø 15,87	Pla
	97-00				**PZ107**	Sachs	Ø 15,87	
1.6 FSI Eng.BAD (81kW)	02-03				**PF799**	Ate	Ø 23,81	Alu, +ESP
	02-03				**PF818**	Bch	Ø 23,81	Alu, -ESP, RHD
	02-03				**PF234**		Ø 23,81	-ESP
	02-03				**CZ077**	Fte	Ø 19,05	Pla

VOLKSWAGEN

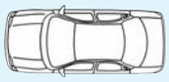	1 2	Spare Parts	F/R	L/R	FRITECH ref.		DIMENSIONS mm.	NOTE
1.6 FSI Eng.BAD (81kW)	02-03				**CZ099**	Fte	Ø 19,05	
	02-03				**PZ064**	Sachs	Ø 15,87	Pla
	02-03				**PZ107**	Sachs	Ø 15,87	
1.8 Cabrio (Exc. SW) Eng.AAM/ ANN (55kW)					**PF609**	Ate	Ø 23,81	Ch -1EZS021846, +ABS
					PF493	Ate	Ø 23,81	Ch 1EZS021847-, Alu, +ABS
	98-03				**CZ076**		Ø 19,05	
1.8 T. Eng.AGU/ ARZ/ AUM (110kW)	00-				**PF799**	Ate	Ø 23,81	Alu, +ESP
	97-00				**PF241**	Ate	Ø 23,81	Alu, +ESP
	97-03				**PF818**	Bch	Ø 23,81	Alu, -ESP, RHD
	97-03				**PF234**		Ø 23,81	-ESP
	8/97-9/03				**CZ076**		Ø 19,05	
	97-				**PZ064**	Sachs	Ø 15,87	Pla
	97-				**PZ107**	Sachs	Ø 15,87	
1.8 T. (Exc. SW) Eng.AUQ (132kW)	01-03				**PF799**	Ate	Ø 23,81	Alu, +ESP
	01-03				**PF818**	Bch	Ø 23,81	Alu, -ESP, RHD
	01-03				**PF234**		Ø 23,81	-ESP
	01-03				**PZ064**	Sachs	Ø 15,87	Pla
	01-03				**PZ107**	Sachs	Ø 15,87	
1.8, 4motion Eng.AGN/ BAF (92kW)	00-03				**PF799**	Ate	Ø 23,81	Alu, +ESP
	97-00				**PF241**	Ate	Ø 23,81	Alu, +ESP
	97-03				**PF818**	Bch	Ø 23,81	Alu, -ESP, RHD
	97-03				**PF234**		Ø 23,81	-ESP
	8/97-9/03				**CZ076**		Ø 19,05	
	97-				**PZ064**	Sachs	Ø 15,87	Pla
	97-				**PZ107**	Sachs	Ø 15,87	
1.8, Cabrio (Exc. SW) Eng.ACC/ ADZ/ ANP (66kW)					**PF609**	Ate	Ø 23,81	Ch -1EZS021846, +ABS
					PF493	Ate	Ø 23,81	Ch 1EZS021847-, Alu, +ABS
	98-03				**CZ076**		Ø 19,05	
1.9 SDi Eng.AGP/ AQM (50kW)	00-03				**PF799**	Ate	Ø 23,81	Alu, +ESP
	97-00				**PF241**	Ate	Ø 23,81	Alu, +ESP
	97-03				**PF818**	Bch	Ø 23,81	Alu, -ESP, RHD
	97-03				**PF234**		Ø 23,81	-ESP
	97-03				**CZ081**	Fte	Ø 23,81	Alu
	97-03				**CZ026**		Ø 23,81	Pla
	97-				**PZ064**	Sachs	Ø 15,87	Pla
	97-				**PZ107**	Sachs	Ø 15,87	
1.9 TDi Eng.AFN/ AHF/ ASV/ AVG (81kW)	00-01				**PF799**	Ate	Ø 23,81	Alu, +ESP
	97-00				**PF241**	Ate	Ø 23,81	Alu, +ESP
	97-01				**PF818**	Bch	Ø 23,81	Alu, -ESP, RHD
	97-01				**PF234**		Ø 23,81	-ESP
	8/97-6/01				**CZ076**		Ø 19,05	
	97-				**PZ064**	Sachs	Ø 15,87	Pla
	97-				**PZ107**	Sachs	Ø 15,87	
1.9 TDi Cabrio Eng.AFN/ AHF/ ASV/ AVG (81kW)					**PF609**	Ate	Ø 23,81	Ch -1EZS021846, +ABS
					PF493	Ate	Ø 23,81	Ch 1EZS021847-, Alu, +ABS
	8/97-6/01				**CZ076**		Ø 19,05	
	97-				**PZ064**	Sachs	Ø 15,87	Pla
	97-				**PZ107**	Sachs	Ø 15,87	
1.9 TDi Cabrio Eng.AGR/ AHU/ ALH/ ALE (66kW)	98-				**PF609**	Ate	Ø 23,81	Ch -1EZS021846, +ABS
	-01				**PF493**	Ate	Ø 23,81	Ch 1EZS021847-, Alu, +ABS
	4/98-6/01				**CZ076**		Ø 19,05	
	98-01				**PZ064**	Sachs	Ø 15,87	Pla
	98-01				**PZ107**	Sachs	Ø 15,87	
1.9 TDi, 4motion Eng.AGR/ AHU/ ALH/ ALE (66kW)	00-01				**PF799**	Ate	Ø 23,81	Alu, +ESP
	10/98-00				**PF241**	Ate	Ø 23,81	Alu, +ESP
	10/98-01				**PF818**	Bch	Ø 23,81	Alu, -ESP, RHD
	10/98-01				**PF234**		Ø 23,81	-ESP
	4/98-6/01				**CZ076**		Ø 19,05	
	98-01				**PZ064**	Sachs	Ø 15,87	Pla
	98-01				**PZ107**	Sachs	Ø 15,87	
1.9 TDi, 4motion Eng.AJM/ AUY (85kW)	00-01				**PF799**	Ate	Ø 23,81	Alu, +ESP
	98-00				**PF241**	Ate	Ø 23,81	Alu, +ESP
	98-01				**PF818**	Bch	Ø 23,81	Alu, -ESP, RHD
	98-01				**PF234**		Ø 23,81	-ESP

		Spare Parts	F/R	L/R	FRITECH ref.		DIMENSIONS mm.	NOTE
1.9 TDi, 4motion Eng.AJM/ AUY (85kW)	98-01				**PZ064**	Sachs	Ø 15,87	Pla
	98-01				**PZ107**	Sachs	Ø 15,87	
1.9 TDi, 4motion Eng.ASZ (96kW)	00-				**PF799**	Ate	Ø 23,81	Alu, +ESP
	00-				**PZ064**	Sachs	Ø 15,87	Pla
	00-				**PZ107**	Sachs	Ø 15,87	
1.9 TDi, 4motion Eng.ATD/ AXR (74kW)	00-03				**PF799**	Ate	Ø 23,81	Alu, +ESP
	00-03				**PF818**	Bch	Ø 23,81	Alu, -ESP, RHD
	00-03				**PF234**		Ø 23,81	-ESP
	9/00-9/03				**CZ076**		Ø 19,05	
	00-03				**PZ064**	Sachs	Ø 15,87	Pla
	00-03				**PZ107**	Sachs	Ø 15,87	
1.9 TDi, 4motion (Exc. SW) Eng.ARL (110kW)	00-				**PF799**	Ate	Ø 23,81	Alu, +ESP
	00-				**PF818**	Bch	Ø 23,81	Alu, -ESP, RHD
	00-				**PF234**		Ø 23,81	-ESP
	00-				**PZ064**	Sachs	Ø 15,87	Pla
	00-				**PZ107**	Sachs	Ø 15,87	
2.0 (Exc. SW) Eng.APK/ AQY/ AZG/ AZJ (85kW)	00-03				**PF799**	Ate	Ø 23,81	Alu, +ESP
	98-00				**PF241**	Ate	Ø 23,81	Alu, +ESP
	98-03				**PF818**	Bch	Ø 23,81	Alu, -ESP, RHD
	98-03				**PF234**		Ø 23,81	-ESP
	7/98-9/03				**CZ076**		Ø 19,05	
	98-03				**PZ064**	Sachs	Ø 15,87	Pla
	98-03				**PZ107**	Sachs	Ø 15,87	
2.0 4motion Eng.AZH/ AZJ (85kW)	00-03				**PF799**	Ate	Ø 23,81	Alu, +ESP
	00-03				**PF818**	Bch	Ø 23,81	Alu, -ESP, RHD
	00-03				**PF234**		Ø 23,81	-ESP
	10/00-9/03				**CZ076**		Ø 19,05	
	00-03				**PZ064**	Sachs	Ø 15,87	Pla
	00-03				**PZ107**	Sachs	Ø 15,87	
2.0 Bi-Fuel (Exc. SW) Eng.BEH (85kW)	02-03				**PF799**	Ate	Ø 23,81	Alu, +ESP
	02-03				**PF818**	Bch	Ø 23,81	Alu, -ESP, RHD
	02-03				**PF234**		Ø 23,81	-ESP
2.0 Cabrio (Exc. SW) Eng.AGG/ AKR/ ATU/ AWF/ AWG (85kW)					**PF609**	Ate	Ø 23,81	Ch -1EZS021846, +ABS
					PF493	Ate	Ø 23,81	Ch 1EZS021847-, Alu, +ABS
	00-				**PF799**	Ate	Ø 23,81	Alu, +ESP
	6/98-9/03				**CZ076**		Ø 19,05	
	98-				**PZ064**	Sachs	Ø 15,87	Pla
	98-				**PZ107**	Sachs	Ø 15,87	
2.3 V5, 4motion Eng.AQN (125kW)	00-				**PF799**	Ate	Ø 23,81	Alu, +ESP
	00-				**PF818**	Bch	Ø 23,81	Alu, -ESP, RHD
	00-				**PF234**		Ø 23,81	-ESP
	10/00-9/03				**CZ076**		Ø 19,05	
	00-				**PZ064**	Sachs	Ø 15,87	Pla
	00-				**PZ107**	Sachs	Ø 15,87	
2.3 VR5, 4motion Eng.AGZ (110kW)	97-00				**PF241**	Ate	Ø 23,81	Alu, +ESP
	97-00				**PF818**	Bch	Ø 23,81	Alu, -ESP, RHD
	97-00				**PF234**		Ø 23,81	-ESP
	8/97-10/00				**CZ076**		Ø 19,05	
	97-00				**PZ064**	Sachs	Ø 15,87	Pla
	97-00				**PZ107**	Sachs	Ø 15,87	
2.8 V6 4motion Eng.AQP/ AUE/ BDE (150kW)	00-03				**PF799**	Ate	Ø 23,81	Alu, +ESP
	99-00				**PF241**	Ate	Ø 23,81	Alu, +ESP
	99-03				**PF818**	Bch	Ø 23,81	Alu, -ESP, RHD
	99-03				**PF234**		Ø 23,81	-ESP
	99-03				**PZ064**	Sachs	Ø 15,87	Pla
	99-03				**PZ107**	Sachs	Ø 15,87	
3.2 R32 4motion (Exc. SW) Eng.BFH (177kW)	02-03				**PZ064**	Sachs	Ø 15,87	Pla
	02-03				**PZ107**	Sachs	Ø 15,87	
Golf V (1K1), Variant 10/03-12/08								
1.4 16v Eng.BCA (55kW)	03-				**PF647**	Ate	Ø 22,20	Ch -1K6565000, Alu
	03-				**PF870**	Bch	Ø 22,20	Alu
	10/03-				**CZ077**	Fte	Ø 19,05	Pla
	10/03-				**CZ099**	Fte	Ø 19,05	

VOLKSWAGEN

		Spare Parts	F/R	L/R	FRITECH ref.		DIMENSIONS mm.	NOTE
1.4 16v Eng.BUD (59kW)	06-				**PF870**	Bch	Ø 22,20	Alu
	06-				**PF961**	Fte	Ø 22,20	Alu, Only Variant
	06-				**CZ077**	Fte	Ø 19,05	Pla
	06-				**CZ099**	Fte	Ø 19,05	
1.4 FSi Eng.BKG/ BLN (66kW)	03-				**PF647**	Ate	Ø 22,20	Ch -1K6565000, Alu
	03-				**PF870**	Bch	Ø 22,20	Alu
	10/03-				**CZ077**	Fte	Ø 19,05	Pla
	10/03-				**CZ099**	Fte	Ø 19,05	
1.4 TSi Eng.BLG (125kW)	05-				**PF870**	Bch	Ø 22,20	Alu
	05-				**PF961**	Fte	Ø 22,20	Alu, Only Variant
	05-9/08				**CZ080**	Sachs	Ø 19,05	Alu
1.4 TSi Eng.BMY (103kW)	06-				**PF870**	Bch	Ø 22,20	Alu
	06-				**PF961**	Fte	Ø 22,20	Alu, Only Variant
	06-9/08				**CZ080**	Sachs	Ø 19,05	Alu
1.4 TSi Eng.CAXA (90kW)	07-				**PF961**	Fte	Ø 22,20	Alu, Only Variant
1.6 Eng.BGU/ BSE/ BSF/ CCSA (75kW)	04-				**PF647**	Ate	Ø 22,20	Ch -1K6565000, Alu
	04-				**PF870**	Bch	Ø 22,20	Alu
	04-				**PF961**	Fte	Ø 22,20	Alu, Only Variant
1.6 FSi Eng.BAG/ BLF/ BLP (85kW)	03-				**PF647**	Ate	Ø 22,20	Ch -1K6565000, Alu
	03-				**PF870**	Bch	Ø 22,20	Alu
	10/03-				**CZ077**	Fte	Ø 19,05	Pla
	10/03-				**CZ099**	Fte	Ø 19,05	
1.9 TDi Eng.BKC/ BJB/ BLS/ BXE (77kW)	03-				**PF647**	Ate	Ø 22,20	Ch -1K6565000, Alu
	03-				**PF961**	Fte	Ø 22,20	Alu, Only Variant
	03-9/08				**CZ080**	Sachs	Ø 19,05	Alu
1.9 TDi Eng.BRU (66kW)	04-				**PF647**	Ate	Ø 22,20	Ch -1K6565000, Alu
	04-				**PF870**	Bch	Ø 22,20	Alu
1.9 TDi 4motion Eng.BKC/ BJB/ BLS (77kW)	03-				**PF647**	Ate	Ø 22,20	Ch -1K6565000, Alu
	03-				**PF870**	Bch	Ø 22,20	Alu
	03-				**PF961**	Fte	Ø 22,20	Alu, Only Variant
	03-9/08				**CZ080**	Sachs	Ø 19,05	Alu
2.0 FSI Eng.AXW/ BLR/ BLX/ BLY/ BVX/ BVY/ BVZ (110kW)	04-				**PF647**	Ate	Ø 22,20	Ch -1K6565000, Alu
	04-				**PF870**	Bch	Ø 22,20	Alu
	04-9/08				**CZ080**	Sachs	Ø 19,05	Alu
2.0 FSI 4motion Eng.AXW (110kW)	04-				**PF647**	Ate	Ø 22,20	Ch -1K6565000, Alu
	04-				**PF870**	Bch	Ø 22,20	Alu
	04-9/08				**CZ080**	Sachs	Ø 19,05	Alu
2.0 SDi Eng.BDK (55kW)	04-				**PF647**	Ate	Ø 22,20	Ch -1K6565000, Alu
	04-				**PF870**	Bch	Ø 22,20	Alu
2.0 TDi Eng.AZV (100kW)	03-				**PF870**	Bch	Ø 22,20	Alu
2.0 TDi Eng.BKD/ BMM/ CBDB (103kW)	03-				**PF647**	Ate	Ø 22,20	Ch -1K6565000, Alu
	03-				**PF870**	Bch	Ø 22,20	Alu
	03-				**PF961**	Fte	Ø 22,20	Alu, Only Variant
	03-9/08				**CZ080**	Sachs	Ø 19,05	Alu
2.0 TDi 16v Eng.BMN (125kW)	05-				**PF870**	Bch	Ø 22,20	Alu
2.0 TDi 4motion Eng.AZV (100kW)	07-08				**PF870**	Bch	Ø 22,20	Alu
2.0 TDi 4motion Eng.BKD/ BMM (103kW)	03-				**PF647**	Ate	Ø 22,20	Ch -1K6565000, Alu
	03-				**PF870**	Bch	Ø 22,20	Alu
	03-9/08				**CZ080**	Sachs	Ø 19,05	Alu
2.0 TFSI Eng.AXX/ BWA/ CCTA/ CAWB (147kW)	04-				**PF870**	Bch	Ø 22,20	Alu
	04-				**PF961**	Fte	Ø 22,20	Alu, Only Variant
2.0 TFSi GTI Ed. 30 Eng.BYD (169kW)	2/07-				**PF870**	Bch	Ø 22,20	Alu
3.2 R32 4motion Eng.BUB (184kW)	05-				**PF870**	Bch	Ø 22,20	Alu
	05-9/08				**CZ080**	Sachs	Ø 19,05	Alu
Golf V Plus (1KP) 1/05-12/08								
1.4 16v Eng.BCA (55kW)	05-				**PF647**	Ate	Ø 22,20	Ch -1K6565000, Alu
	05-				**PF646**	Bch	Ø 22,20	Ch -1K6565000, Alu
	05-				**PF870**	Bch	Ø 22,20	Ch 1K6565001-, Alu
	05-				**CZ080**	Sachs	Ø 19,05	Alu, Cod. ID PR 0EJ
1.4 16v Eng.BUD (59kW)	05-				**PF870**	Bch	Ø 22,20	Ch 1K6565001-, Alu
	05-				**CZ080**	Sachs	Ø 19,05	Alu, Cod. ID PR 0EJ
1.4 16v TSi Eng.BMY (103kW)	06-				**PF870**	Bch	Ø 22,20	Ch 1K6565001-, Alu
	05-				**CZ080**	Sachs	Ø 19,05	Alu, Cod. ID PR 0EJ

		Spare Parts	F/R	L/R	FRITECH ref.		DIMENSIONS mm.	NOTE
1.4 FSi Eng.BLN (66kW)	05-06				**PF870**	Bch	Ø 22,20	Ch 1K6565001-, Alu
	05-				**CZ080**	Sachs	Ø 19,05	Alu, Cod. ID PR 0EJ
1.4 TSi Eng.BLG (125kW)	06-				**PF870**	Bch	Ø 22,20	Ch 1K6565001-, Alu
	06-				**CZ080**	Sachs	Ø 19,05	Alu, Cod. ID PR 0EJ
1.4 TSi Eng.CAXA (90kW)	07-				**CZ080**	Sachs	Ø 19,05	Alu, Cod. ID PR 0EJ
1.6 Eng.BSE/ BSF (75kW)	05-				**PF647**	Ate	Ø 22,20	Ch -1K6565000, Alu
	05-				**PF646**	Bch	Ø 22,20	Ch -1K6565000, Alu
	05-				**PF870**	Bch	Ø 22,20	Ch 1K6565001-, Alu
	05-				**CZ080**	Sachs	Ø 19,05	Alu, Cod. ID PR 0EJ
1.6 Eng.CCSA (75kW)	07-08				**PF647**	Ate	Ø 22,20	Ch -1K6565000, Alu
	07-08				**PF646**	Bch	Ø 22,20	Ch -1K6565000, Alu
	07-08				**PF870**	Bch	Ø 22,20	Ch 1K6565001-, Alu
	07-				**CZ080**	Sachs	Ø 19,05	Alu, Cod. ID PR 0EJ
1.6 FSi Eng.BAG/ BLF (85kW)	05-				**PF647**	Ate	Ø 22,20	Ch -1K6565000, Alu
	05-				**PF646**	Bch	Ø 22,20	Ch -1K6565000, Alu
	05-				**PF870**	Bch	Ø 22,20	Ch 1K6565001-, Alu
	05-				**CZ080**	Sachs	Ø 19,05	Alu, Cod. ID PR 0EJ
1.9 TDi Eng.BKC (77kW)	05-				**PF647**	Ate	Ø 22,20	Ch -1K6565000, Alu
	05-				**PF646**	Bch	Ø 22,20	Ch -1K6565000, Alu
	05-				**PF870**	Bch	Ø 22,20	Ch 1K6565001-, Alu
	05-				**CZ080**	Sachs	Ø 19,05	Alu, Cod. ID PR 0EJ
1.9 TDi Eng.BRU (66kW)	05-				**PF647**	Ate	Ø 22,20	Ch -1K6565000, Alu
	05-				**PF646**	Bch	Ø 22,20	Ch -1K6565000, Alu
	05-				**PF870**	Bch	Ø 22,20	Ch 1K6565001-, Alu
	05-				**CZ080**	Sachs	Ø 19,05	Alu, Cod. ID PR 0EJ
2.0 FSi Eng.BLR/ BLY/ BVY/ BVZ (110kW)	05-				**PF647**	Ate	Ø 22,20	Ch -1K6565000, Alu
	05-				**PF646**	Bch	Ø 22,20	Ch -1K6565000, Alu
	05-				**PF870**	Bch	Ø 22,20	Ch 1K6565001-, Alu
	05-				**CZ080**	Sachs	Ø 19,05	Alu, Cod. ID PR 0EJ
2.0 TDi Eng.AZV (100kW)	05-				**PF647**	Ate	Ø 22,20	Ch -1K6565000, Alu
	05-				**PF646**	Bch	Ø 22,20	Ch -1K6565000, Alu
	05-				**PF870**	Bch	Ø 22,20	Ch 1K6565001-, Alu
	05-				**CZ080**	Sachs	Ø 19,05	Alu, Cod. ID PR 0EJ
2.0 TDi Eng.BKD/ BMM (103kW)	05-				**PF647**	Ate	Ø 22,20	Ch -1K6565000, Alu
	05-				**PF646**	Bch	Ø 22,20	Ch -1K6565000, Alu
	05-				**PF870**	Bch	Ø 22,20	Ch 1K6565001-, Alu
	05-				**CZ080**	Sachs	Ø 19,05	Alu, Cod. ID PR 0EJ
2.0 TDi PF Eng.BEE (96kW)	05-				**CZ080**	Sachs	Ø 19,05	Alu, Cod. ID PR 0EJ
Golf VI (517) Cabrio 3/11-								
1.2 TSi Eng.CBZB/ CJZA (77kW)	11-				**PF869**	Ate	Ø 22,20	Alu
1.4 TSi Eng.CAVD/ CLWA/ CTHD/ CTKA (118kW)	11-				**PF869**	Ate	Ø 22,20	Alu
1.6 TDi Eng.CAYC (77kW)	11-				**PF869**	Ate	Ø 22,20	Alu
2.0 TDi Eng.CFHC (103kW)	11-				**PF869**	Ate	Ø 22,20	Alu
Golf VI (5K1), Variant 10/08-10/12								
1.2 TSi Eng.CBZA (63kW)	10-				**PF869**	Ate	Ø 22,20	Alu, Cod. ID PR 1ZF, 1ZP, 1ZD, 1LV
	10-				**PF870**	Bch	Ø 22,20	Alu, Cod. ID PR 1ZF, 1ZP, 1ZD
	10-				**PF961**	Fte	Ø 22,20	Alu, Only Variant
1.2 TSi Eng.CBZB (77kW)	10-				**PF869**	Ate	Ø 22,20	Alu, Cod. ID PR 1ZF, 1ZP, 1ZD, 1LV
	10-				**PF870**	Bch	Ø 22,20	Alu, Cod. ID PR 1ZF, 1ZP, 1ZD
	09-				**PF961**	Fte	Ø 22,20	Alu, Only Variant
1.4 Eng.BUD/ CGGA (59kW)	08-				**PF869**	Ate	Ø 22,20	Alu
	08-				**PF961**	Fte	Ø 22,20	Alu, Only Variant
1.4 TSi Eng.CAVD/ CNWA/ CTHD/ CTKA (118kW)	08-				**PF869**	Ate	Ø 22,20	Alu
	06-				**PF961**	Fte	Ø 22,20	Alu, Only Variant
	08-				**PF961**	Fte	Ø 22,20	Alu, Only Variant
	08-6/11				**CZ080**	Sachs	Ø 19,05	Alu, Cod. ID PR 0EJ
1.4 TSi Eng.CAXA (90kW)	08-				**PF869**	Ate	Ø 22,20	Alu
	06-				**PF961**	Fte	Ø 22,20	Alu, Only Variant
	08-				**PF961**	Fte	Ø 22,20	Alu, Only Variant
	08-6/11				**CZ080**	Sachs	Ø 19,05	Alu, Cod. ID PR 0EJ
1.6 Eng.BSE/ BSF/ CCSA/ CHGA (75kW)	08-				**PF869**	Ate	Ø 22,20	Alu
	06-				**PF961**	Fte	Ø 22,20	Alu, Only Variant
	08-				**PF961**	Fte	Ø 22,20	Alu, Only Variant

VOLKSWAGEN

		Spare Parts	F/R	L/R	FRITECH ref.		DIMENSIONS mm.	NOTE
1.6 Eng.CMXA (75kW)	08-				**PF869**	Ate	Ø 22,20	Alu, Cod. ID PR 1ZF, 1ZP, 1ZD, 1LV
	08-				**PF870**	Bch	Ø 22,20	Alu, Cod. ID PR 1ZF, 1ZP, 1ZD
	08-				**PF961**	Fte	Ø 22,20	Alu, Only Variant
1.6 TDi Eng.CAYB (66kW)	09-				**PF869**	Ate	Ø 22,20	Alu, Cod. ID PR 1ZF, 1ZP, 1ZD, 1LV
	09-				**PF870**	Bch	Ø 22,20	Alu, Cod. ID PR 1ZF, 1ZP, 1ZD
	09-				**PF961**	Fte	Ø 22,20	Alu, Only Variant
	09-6/11				**CZ080**	Sachs	Ø 19,05	Alu, Cod. ID PR 0EJ
1.6 TDi, 4motion Eng.CAYC (77kW)	09-				**PF869**	Ate	Ø 22,20	Alu
	09-				**PF961**	Fte	Ø 22,20	Alu, Only Variant
	09-6/11				**CZ080**	Sachs	Ø 19,05	Alu, Cod. ID PR 0EJ
1.8 TSi Eng.CDAA (118kW)	08-				**PF869**	Ate	Ø 22,20	Alu
	08-				**PF870**	Bch	Ø 22,20	Alu, Cod. ID PR 1ZF, 1ZP, 1ZD
2.0 R 4motion Eng.CDLC (188kW)	09-				**PF869**	Ate	Ø 22,20	Alu, Cod. ID PR 1ZF, 1ZP, 1ZD, 1LV
	09-				**PF870**	Bch	Ø 22,20	Alu, Cod. ID PR 1ZF, 1ZP, 1ZD
2.0 R, 4motion Eng.CDLF (199kW)	10-				**PF869**	Ate	Ø 22,20	Alu, Cod. ID PR 1ZF, 1ZP, 1ZD, 1LV
	10-				**PF870**	Bch	Ø 22,20	Alu, Cod. ID PR 1ZF, 1ZP, 1ZD
2.0 TDi Eng.CBBB/ CFGB (125kW)	09-				**PF869**	Ate	Ø 22,20	Alu
2.0 TDi Eng.CBDC/ CLCA (81kW)	08-				**PF869**	Ate	Ø 22,20	Alu
	08-				**PF961**	Fte	Ø 22,20	Alu, Only Variant
	08-6/11				**CZ080**	Sachs	Ø 19,05	Alu, Cod. ID PR 0EJ
2.0 TDi Eng.CFFA/ CBAA (100kW)	08-				**PF961**	Fte	Ø 22,20	Alu, Only Variant
2.0 TDi, 4motion Eng.CBAB/ CBDB/ CFFB (103kW)	08-				**PF869**	Ate	Ø 22,20	Alu
	08-				**PF961**	Fte	Ø 22,20	Alu, Only Variant
2.0 TSi Eng.CBFA/ CCTA (147kW)	06-				**PF961**	Fte	Ø 22,20	Alu, Only Variant
	09-				**PF961**	Fte	Ø 22,20	Alu, Only Variant
2.0 TSi Eng.CCZB (155kW)	09-				**PF869**	Ate	Ø 22,20	Alu
Golf VI Plus (5M1) 1/09-4/14								
1.2 TSi Eng.CBZA (63kW)	10-				**PF869**	Ate	Ø 22,20	Alu
	10-				**CZ080**	Sachs	Ø 19,05	Alu, Cod. ID PR 0EJ
1.2 TSi Eng.CBZB (77kW)	09-				**PF869**	Ate	Ø 22,20	Alu
	09-				**CZ080**	Sachs	Ø 19,05	Alu, Cod. ID PR 0EJ
1.4 TSi Eng.CAVD (118kW)	09-				**PF869**	Ate	Ø 22,20	Alu
	09-6/11				**CZ080**	Sachs	Ø 19,05	Alu, Cod. ID PR 0EJ
1.6 Eng.CCSA/ CHGA (75kW)	09-				**PF869**	Ate	Ø 22,20	Alu
	09-				**CZ080**	Sachs	Ø 19,05	Alu, Cod. ID PR 0EJ
1.6 TDi Eng.CAYB (66kW)	09-				**CZ080**	Sachs	Ø 19,05	Alu, Cod. ID PR 0EJ
1.6 TDi Eng.CAYC/ CBAA (77kW)	12-				**PF869**	Ate	Ø 22,20	Alu
	09-				**CZ080**	Sachs	Ø 19,05	Alu, Cod. ID PR 0EJ
2.0 TDi Eng.CBDC/ CLCA (81kW)	09-				**PF869**	Ate	Ø 22,20	Alu
	09-				**CZ080**	Sachs	Ø 19,05	Alu, Cod. ID PR 0EJ
2.0 TDi, 4motion Eng.CFHC (103kW)	09-				**PF869**	Ate	Ø 22,20	Alu
Golf VII (5G1, BA5), Variant 11/12-								
1.6 TDi, 4motion Eng.CLHA (77kW)	-1/13				**CZ080**	Sachs	Ø 19,05	Alu
Jetta I (17) 8/79-12/83								
1.1 Eng.FA/ GG (37kW)	79-83		R		**CF001**		Ø 14,29	
	79-83		R		**CF532**		Ø 14,29	Alu
	79-83				**PF058**		Ø 20,64	
	79-83				**PF059**		Ø 20,64	
1.3 Eng.GF (44kW)	79-83		R		**CF001**		Ø 14,29	
	79-83		R		**CF532**		Ø 14,29	Alu
	79-83				**PF058**		Ø 20,64	
	79-83				**PF059**		Ø 20,64	
1.3 Eng.GS (43kW)	82-83		R		**CF001**		Ø 14,29	
	82-83		R		**CF532**		Ø 14,29	Alu
1.5 Eng.JB (51kW)	79-83		R		**CF001**		Ø 14,29	M/T
	79-83		R		**CF532**		Ø 14,29	Alu, M/T
	79-83		R		**CF000**		Ø 17,46	A/T
	79-83		R		**CF239**		Ø 17,46	Alu, A/T
	79-83				**PF058**		Ø 20,64	
	79-83				**PF059**		Ø 20,64	
1.6 Eng.EG (81kW)	79-82		R		**CF001**		Ø 14,29	M/T
	79-82		R		**CF532**		Ø 14,29	Alu, M/T
	79-82		R		**CF000**		Ø 17,46	A/T
	79-82		R		**CF239**		Ø 17,46	Alu, A/T

		Spare Parts	F/R	L/R	FRITECH ref.		DIMENSIONS mm.	NOTE
1.6 Eng.EG (81kW)	79-82				**PF058**		Ø 20,64	
	79-82				**PF059**		Ø 20,64	
1.6 Eng.EM (55kW)	81-83		R		**CF001**		Ø 14,29	M/T
	81-83		R		**CF532**		Ø 14,29	Alu, M/T
	81-83		R		**CF000**		Ø 17,46	A/T
	81-83		R		**CF239**		Ø 17,46	Alu, A/T
1.6 Eng.EW (55kW)	82-83		R		**CF001**		Ø 14,29	M/T
	82-83		R		**CF532**		Ø 14,29	Alu, M/T
	82-83		R		**CF000**		Ø 17,46	A/T
	82-83		R		**CF239**		Ø 17,46	Alu, A/T
1.6 Eng.FR (63kW)	80-83		R		**CF001**		Ø 14,29	M/T
	80-83		R		**CF532**		Ø 14,29	Alu, M/T
	80-83		R		**CF000**		Ø 17,46	A/T
	80-83		R		**CF239**		Ø 17,46	Alu, A/T
	80-83				**PF058**		Ø 20,64	
	80-83				**PF059**		Ø 20,64	
1.6 D Eng.CR/ JK (40kW)	80-83		R		**CF001**		Ø 14,29	M/T
	80-83		R		**CF532**		Ø 14,29	Alu, M/T
	80-83		R		**CF000**		Ø 17,46	A/T
	80-83		R		**CF239**		Ø 17,46	Alu, A/T
	80-83				**PF058**		Ø 20,64	
	80-83				**PF059**		Ø 20,64	
1.6 TD Eng.CY (51kW)	82-83		R		**CF001**		Ø 14,29	
	82-83		R		**CF532**		Ø 14,29	Alu
	82-83				**PF058**		Ø 20,64	
	82-83				**PF059**		Ø 20,64	
1.7 (57kW)	80-84		R		**CF000**		Ø 17,46	Japan
	80-84		R		**CF239**		Ø 17,46	Alu, Japan
1.8 Eng.DX (82kW)	82-83		R		**CF000**		Ø 17,46	
	82-83		R		**CF239**		Ø 17,46	Alu
	82-83				**PF058**		Ø 20,64	
	82-83				**PF059**		Ø 20,64	
Jetta II (19E, 1G2) 1/84-12/91								
1.0 Eng.HZ (33-37kW)	84-91				**PF005**		Ø 20,64	
1.3 Eng.GT (44kW)	84-86		R		**CF001**		Ø 14,29	-CF
	84-86		R		**CF532**		Ø 14,29	Alu, -CF
	84-86		R		**CF000**		Ø 17,46	+CF
	84-86		R		**CF239**		Ø 17,46	Alu, +CF
	84-86				**PF005**		Ø 20,64	
1.3, Kat Eng.2G/ HK/ MH/ NZ (40kW)	84-86		R		**CF001**		Ø 14,29	-CF
	84-86		R		**CF532**		Ø 14,29	Alu, -CF
	84-86		R		**CF000**		Ø 17,46	+CF
	84-86		R		**CF239**		Ø 17,46	Alu, +CF
	84-91				**PF005**		Ø 20,64	
1.6 Eng.EZ/ HM (55kW)	84-86		R		**CF001**		Ø 14,29	-CF
	84-86		R		**CF532**		Ø 14,29	Alu, -CF
	84-86		R		**CF000**		Ø 17,46	+CF
	84-86		R		**CF239**		Ø 17,46	Alu, +CF
	84-91				**PF005**		Ø 20,64	
1.6 Eng.PN (51kW)	84-86		R		**CF001**		Ø 14,29	-CF
	84-86		R		**CF532**		Ø 14,29	Alu, -CF
	84-86		R		**CF000**		Ø 17,46	+CF
	84-86		R		**CF239**		Ø 17,46	Alu, +CF
	86-91				**PF005**		Ø 20,64	
1.6 Eng.RF(KAT) (53kW)	84-86		R		**CF001**		Ø 14,29	-CF
	84-86		R		**CF532**		Ø 14,29	Alu, -CF
	84-86		R		**CF000**		Ø 17,46	+CF
	84-86		R		**CF239**		Ø 17,46	Alu, +CF
	86-91				**PF005**		Ø 20,64	
1.6 D Eng.JP/ ME (40kW)	84-86		R		**CF001**		Ø 14,29	-CF
	84-86		R		**CF532**		Ø 14,29	Alu, -CF
	84-86		R		**CF000**		Ø 17,46	+CF
	84-86		R		**CF239**		Ø 17,46	Alu, +CF
	8/89-91				**PF033**	Ate	Ø 20,64	-ABS

VOLKSWAGEN

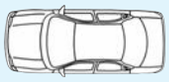		Spare Parts	F/R	L/R	FRITECH ref.		DIMENSIONS mm.	NOTE
1.6 D Eng.JP/ ME (40kW)	84-7/89				**PF005**		Ø 20,64	
1.6 TD Eng.1V (44kW)	84-86		R		**CF001**		Ø 14,29	-CF
	84-86		R		**CF532**		Ø 14,29	Alu, -CF
	84-86		R		**CF000**		Ø 17,46	+CF
	84-86		R		**CF239**		Ø 17,46	Alu, +CF
1.6 TD Eng.JR/ MF (51kW)	84-86		R		**CF001**		Ø 14,29	-CF
	84-86		R		**CF532**		Ø 14,29	Alu, -CF
	84-86		R		**CF000**		Ø 17,46	+CF
	84-86		R		**CF239**		Ø 17,46	Alu, +CF
	8/89-91				**PF033**	Ate	Ø 20,64	-ABS
	84-7/89				**PF005**		Ø 20,64	
1.6 TD Eng.RA/ SB (59kW)	84-86		R		**CF001**		Ø 14,29	-CF
	84-86		R		**CF532**		Ø 14,29	Alu, -CF
	84-86		R		**CF000**		Ø 17,46	+CF
	84-86		R		**CF239**		Ø 17,46	Alu, +CF
1.8 Eng.HT/ RV (77kW)	86-90		R		**CF001**		Ø 14,29	-CF
	86-90		R		**CF532**		Ø 14,29	Alu, -CF
	86-90		R		**CF000**		Ø 17,46	-CF
	86-90		R		**CF239**		Ø 17,46	Alu, -CF
1.8 Eng.JH (70kW)	86-90		R		**CF001**		Ø 14,29	-CF
	86-90		R		**CF532**		Ø 14,29	Alu, -CF
	86-90		R		**CF000**		Ø 17,46	-CF
	86-90		R		**CF239**		Ø 17,46	Alu, -CF
1.8 Eng.RH (62kW)	86-90		R		**CF001**		Ø 14,29	-CF
	86-90		R		**CF532**		Ø 14,29	Alu, -CF
	86-90		R		**CF000**		Ø 17,46	-CF
	86-90		R		**CF239**		Ø 17,46	Alu, -CF
	89-90				**PF033**	Ate	Ø 20,64	-ABS
	86-89				**PF005**		Ø 20,64	
1.8 16v Eng.KR (102kW)	86-90		R		**CF001**		Ø 14,29	-CF
	86-90		R		**CF532**		Ø 14,29	Alu, -CF
	86-90		R		**CF000**		Ø 17,46	-CF
	86-90		R		**CF239**		Ø 17,46	Alu, -CF
1.8 16v GTi Eng.PL (95kW)	86-90		R		**CF001**		Ø 14,29	-CF
	86-90		R		**CF532**		Ø 14,29	Alu, -CF
	86-90		R		**CF000**		Ø 17,46	-CF
	86-90		R		**CF239**		Ø 17,46	Alu, -CF
	-91				**PF039**	Luc	Ø 22,20	Ch 1GKB075001-, -ABS
1.8 GT, Syncro, Kat Eng.HV/ GU/ GX (66kW)	84-91		R		**CF001**		Ø 14,29	Exc. Syncro, -CF
	84-91		R		**CF532**		Ø 14,29	Alu, Exc. Syncro, -CF
	84-91		R		**CF000**		Ø 17,46	Exc. Syncro, -CF
	84-91		R		**CF239**		Ø 17,46	Alu, Exc. Syncro, -CF
	84-91		R		**CF107**		Ø 19,05	Syncro, 4WD
	84-91		R		**CF121**		Ø 19,05	Alu, Syncro, 4WD
	84-91				**PF033**	Ate	Ø 20,64	-ABS
	84-91				**PF005**		Ø 20,64	Syncro, 4WD
1.8 GTi Eng.EV/ GZ/ PB (82kW)	86-90		R		**CF001**		Ø 14,29	-CF
	86-90		R		**CF532**		Ø 14,29	Alu, -CF
	86-90		R		**CF000**		Ø 17,46	-CF
	86-90		R		**CF239**		Ø 17,46	Alu, -CF
	-91				**PF039**	Luc	Ø 22,20	Ch 1GKB075001-, -ABS
	84-				**PF005**		Ø 20,64	Ch -1GKB075000
1.8 GTi, Kat Eng.PF/ RD (79kW)	86-90		R		**CF001**		Ø 14,29	-CF
	86-90		R		**CF532**		Ø 14,29	Alu, -CF
	86-90		R		**CF000**		Ø 17,46	-CF
	86-90		R		**CF239**		Ø 17,46	Alu, -CF
	-87				**PF039**	Luc	Ø 22,20	Ch 1GKB075001-, -ABS
	85-				**PF005**		Ø 20,64	Ch -1GKB075000
1.8 Syncro Eng.1P (72kW)	88-91		R		**CF107**		Ø 19,05	4WD
	88-91		R		**CF121**		Ø 19,05	Alu, 4WD
	88-91				**PF005**		Ø 20,64	
1.8, Syncro Eng.RP (66kW)	84-91		R		**CF001**		Ø 14,29	Exc. Syncro, -CF
	84-91		R		**CF532**		Ø 14,29	Alu, Exc. Syncro, -CF
	84-91		R		**CF000**		Ø 17,46	Exc. Syncro, -CF

		Spare Parts	F/R	L/R	FRITECH ref.		DIMENSIONS mm.	NOTE
1.8, Syncro Eng.RP (66kW)	84-91		R		**CF239**		Ø 17,46	Alu, Exc. Syncro, -CF
	84-91		R		**CF107**		Ø 19,05	Syncro, 4WD
	84-91		R		**CF121**		Ø 19,05	Alu, Syncro, 4WD
	84-91				**PF033**	Ate	Ø 20,64	-ABS
	84-91				**PF005**		Ø 20,64	Syncro, 4WD
Jetta III (1KM) 8/05-1/11								
1.4 16v TSi Eng.BMY (103kW)	06-				**PF647**	Ate	Ø 22,20	Ch -1K6741206, Alu
	07-				**PF961**	Fte	Ø 22,20	Ch -1K6741206, Alu
	06-				**CZ080**	Sachs	Ø 19,05	Alu
1.4 TSi Eng.BLG (125kW)	06-				**PF869**	Ate	Ø 22,20	Alu, +ESP
	06-				**PF647**	Ate	Ø 22,20	Ch -1K6741206, Alu
	06-				**PF961**	Fte	Ø 22,20	Ch -1K6741206, Alu
	06-				**CZ080**	Sachs	Ø 19,05	Alu
1.4 TSi Eng.CAVD (118kW)	08-				**PF869**	Ate	Ø 22,20	Alu
1.4 TSi Eng.CAXA (90kW)	07-				**PF647**	Ate	Ø 22,20	Ch -1K6741206, Alu
	07-				**CZ080**	Sachs	Ø 19,05	Alu
1.6 Eng.BSE/ BSF/ CCSA (75kW)	05-				**PF647**	Ate	Ø 22,20	Ch -1K6741206, Alu
	05-				**PF961**	Fte	Ø 22,20	Ch -1K6741206, Alu
	05-				**CZ080**	Sachs	Ø 19,05	Alu
1.6 Eng.CCSA (75kW)	08-				**PF647**	Ate	Ø 22,20	Ch -1K6741206, Alu
	08-				**CZ080**	Sachs	Ø 19,05	Alu
1.6 FSI Eng.BAG/ BLF (85kW)	05-				**PF647**	Ate	Ø 22,20	Ch -1K6741206, Alu
	05-				**PF961**	Fte	Ø 22,20	Ch -1K6741206, Alu
	05-				**CZ080**	Sachs	Ø 19,05	Alu
1.6 TDi Eng.CAYB (66kW)	09-				**CZ080**	Sachs	Ø 19,05	Alu
1.6 TDi Eng.CAYC (77kW)	09-				**PF869**	Ate	Ø 22,20	Alu
	09-				**CZ080**	Sachs	Ø 19,05	Alu
1.9 TDi Eng.BKC/ BLS (77kW)	05-				**PF647**	Ate	Ø 22,20	Ch -1K6741206, Alu
	05-				**PF961**	Fte	Ø 22,20	Ch -1K6741206, Alu
	05-				**CZ080**	Sachs	Ø 19,05	Alu
2.0 FSI Eng.BLR/ BLY (110kW)	05-				**PF647**	Ate	Ø 22,20	Ch -1K6741206, Alu
	05-				**PF961**	Fte	Ø 22,20	Ch -1K6741206, Alu
	05-				**CZ080**	Sachs	Ø 19,05	Alu
2.0 TDi Eng.AZV/ CBDA (100kW)	05-				**PF961**	Fte	Ø 22,20	Ch -1K6741206, Alu
	05-				**CZ080**	Sachs	Ø 19,05	Alu
2.0 TDi Eng.BKD/ BMM (103kW)	05-				**PF647**	Ate	Ø 22,20	Ch -1K6741206, Alu
	05-				**PF961**	Fte	Ø 22,20	Ch -1K6741206, Alu
	05-				**CZ080**	Sachs	Ø 19,05	Alu
2.0 TDi Eng.BMN (125kW)	06-				**PF869**	Ate	Ø 22,20	Alu
	06-				**PF961**	Fte	Ø 22,20	Ch -1K6741206, Alu
	06-				**CZ080**	Sachs	Ø 19,05	Alu
2.0 TFSI Eng.BWA/ BPY/ CCTA (147kW)	05-				**PF647**	Ate	Ø 22,20	Ch -1K6741206, Alu
	05-				**PF961**	Fte	Ø 22,20	Ch -1K6741206, Alu
Jetta IV (162) 2/11-								
1.2 TSi Eng.CBZB (77kW)	11-				**PF961**	Fte	Ø 22,20	Alu
	4/11-				**CZ080**	Sachs	Ø 19,05	Alu, Cod. ID PR 0EJ
1.4 TSi Eng.CAVD/ CTHD (118kW)	11-				**PF961**	Fte	Ø 22,20	Alu
	11-				**CZ080**	Sachs	Ø 19,05	Alu, Cod. ID PR 0EJ
1.4 TSi Eng.CAXA/ CMSB (90kW)	11-				**CZ080**	Sachs	Ø 19,05	Alu, Cod. ID PR 0EJ
1.6 TDi Eng.CAYC (77kW)	11-				**PF961**	Fte	Ø 22,20	Alu
	4/11-				**CZ080**	Sachs	Ø 19,05	Alu, Cod. ID PR 0EJ
2.0 TDi Eng.CFFB/ CFHC/ CJAA/ CLCB (103kW)	11-				**PF961**	Fte	Ø 22,20	Alu
	4/11-				**CZ080**	Sachs	Ø 19,05	Alu, Cod. ID PR 0EJ
2.0 TDi Eng.CLCA (81kW)	4/11-				**CZ080**	Sachs	Ø 19,05	Alu, Cod. ID PR 0EJ
2.0 TSi Eng.CBFA/ CCTA/ CCZA (147kW)	11-				**PF961**	Fte	Ø 22,20	Alu
	4/11-				**CZ080**	Sachs	Ø 19,05	Alu, Cod. ID PR 0EJ
K 70 (48) 8/70-10/74								
1.6 Eng.DA (66kW)	70-74		R		**CF194**		Ø 17,46	
1.6 Eng.DB (55kW)	70-71		R		**CF194**		Ø 17,46	
Kaefer 4/49-7/03								
1.2 Eng.M51 (22kW)	8/64-		F		**CF193**		Ø 22,22	
	1/67-		R		**CF194**		Ø 17,46	
	8/64-66		R		**CF263**		Ø 19,05	

VOLKSWAGEN

		Spare Parts	F/R	L/R	FRITECH ref.		DIMENSIONS mm.	NOTE
1.2, Cabrio Eng.D (25kW)	8/64-		F		**CF193**		Ø 22,22	
	1/67-		R		**CF194**		Ø 17,46	
	8/64-66		R		**CF263**		Ø 19,05	
1.3 Eng.E (27kW)	8/65-70		F		**CF193**		Ø 22,22	
	8/67-70		R		**CF194**		Ø 17,46	
	65-7/67		R		**CF263**		Ø 19,05	
1.3, Cabrio Eng.AB/ AR (32kW)	70-81		F		**CF193**		Ø 22,22	
	8/67-81		R		**CF194**		Ø 17,46	
	70-7/67		R		**CF263**		Ø 19,05	
1.3, Cabrio, Karmann Eng.113/ AC/ F (29-30kW)	64-75		F		**CF193**		Ø 22,22	
	8/67-75		R		**CF194**		Ø 17,46	
	64-7/67		R		**CF263**		Ø 19,05	
1.6, Cabrio Eng.AE/ AH/ AK (35kW)	8/70-		F		**CF300**		Ø 23,81	
	8/70-		R		**CF194**		Ø 17,46	
Karmann Ghia (14, 34) 1/60-7/74								
1.2 Cabrio Eng.D (25kW)	60-64		R		**CF263**		Ø 19,05	
1.3 Coupe Eng.AB (32kW)	70-74		F		**CF193**		Ø 22,22	
	70-74		R		**CF263**		Ø 19,05	
1.5 Eng.341 (40kW)	61-70		F		**CF193**		Ø 22,22	
	61-70		R		**CF194**		Ø 17,46	
1.5 Cabrio Eng.113/ F (29-30kW)	64-74		F		**CF193**		Ø 22,22	
	64-74		R		**CF194**		Ø 17,46	
1.5 Coupe Eng.H (32kW)	66-69		F		**CF193**		Ø 22,22	
	66-69		R		**CF194**		Ø 17,46	
1.6 Coupe Eng.AD (35kW)	71-74		F		**CF193**		Ø 22,22	
	71-74		R		**CF194**		Ø 17,46	
1.6 Coupe Eng.AD (37kW)	70-73		F		**CF193**		Ø 22,22	
	70-73		R		**CF194**		Ø 17,46	
Lupo (6X1, 6E1) 9/98-12/05								
1.0 Eng.AER/ AHT/ ALD/ ALL/ ANV/ AUC (37kW)	98-		R		**CF000**		Ø 17,46	+ABS
	98-		R		**CF239**		Ø 17,46	Alu, +ABS
	98-		R		**CF080**		Ø 15,87	-ABS
	98-		R		**CF725**		Ø 15,87	Alu, -ABS
	98-				**PF645**	Ate	Ø 22,20	Alu, +ABS, +ESP
	98-				**PF494**	Ate	Ø 22,20	Alu, +ABS, -ESP, LHD
	98-				**PF310**	Ate	Ø 22,20	+ABS, RHD
	98-				**PF041**	Ate	Ø 20,64	-ABS
	98-				**PF231**	Ate	Ø 20,64	Alu, -ABS
1.2 TDi 3L Eng.ANY/ AYZ (45kW)	7/99-		R		**CF000**		Ø 17,46	+ABS
	7/99-		R		**CF239**		Ø 17,46	Alu, +ABS
	7/99-		R		**CF080**		Ø 15,87	-ABS
	7/99-		R		**CF725**		Ø 15,87	Alu, -ABS
	7/99-				**PF645**	Ate	Ø 22,20	Alu, +ABS, +ESP
	7/99-				**PF494**	Ate	Ø 22,20	Alu, +ABS, -ESP, LHD
	7/99-				**PF310**	Ate	Ø 22,20	+ABS, RHD
	7/99-				**PF041**	Ate	Ø 20,64	-ABS
	7/99-				**PF231**	Ate	Ø 20,64	Alu, -ABS
1.4 Eng.AKK/ AUD (44kW)	00-		R		**CF000**		Ø 17,46	+ABS
	00-		R		**CF239**		Ø 17,46	Alu, +ABS
	00-		R		**CF080**		Ø 15,87	-ABS
	00-		R		**CF725**		Ø 15,87	Alu, -ABS
	00-				**PF645**	Ate	Ø 22,20	Alu, +ABS, +ESP
	00-				**PF494**	Ate	Ø 22,20	Alu, +ABS, -ESP, LHD
	00-				**PF310**	Ate	Ø 22,20	+ABS, RHD
	00-				**PF041**	Ate	Ø 20,64	-ABS
	00-				**PF231**	Ate	Ø 20,64	Alu, -ABS
1.4 16v Eng.AFK/ ANM/ AQQ/ AUB (74kW)	99-		R		**CF000**		Ø 17,46	+ABS
	99-		R		**CF239**		Ø 17,46	Alu, +ABS
	99-		R		**CF080**		Ø 15,87	-ABS
	99-		R		**CF725**		Ø 15,87	Alu, -ABS
	99-05				**PF825**	Ate	Ø 23,81	Alu, +ABS, +ESP, LHD
	99-				**PF548**	Ate	Ø 23,81	Alu, +ABS, -ESP
	99-				**PF310**	Ate	Ø 22,20	+ABS, RHD
	99-				**PF041**	Ate	Ø 20,64	-ABS

		Spare Parts	F/R	L/R	FRITECH ref.		DIMENSIONS mm.	NOTE
1.4 16v Eng.AFK/ ANM/ AQQ/ AUB (74kW)	99-				**PF231**	Ate	Ø 20,64	Alu, -ABS
1.4 16v Eng.AHW/ AKQ/ APE/ AUA/ BBY (55kW)	9/98-		R		**CF000**		Ø 17,46	+ABS
	9/98-		R		**CF239**		Ø 17,46	Alu, +ABS
	9/98-		R		**CF080**		Ø 15,87	-ABS
	9/98-		R		**CF725**		Ø 15,87	Alu, -ABS
	9/98-				**PF645**	Ate	Ø 22,20	Alu, +ABS, +ESP
	9/98-				**PF494**	Ate	Ø 22,20	Alu, +ABS, -ESP, LHD
	9/98-				**PF310**	Ate	Ø 22,20	+ABS, RHD
	9/98-				**PF041**	Ate	Ø 20,64	-ABS
	9/98-				**PF231**	Ate	Ø 20,64	Alu, -ABS
1.4 FSI Eng.ARR (77kW)	01-		R		**CF000**		Ø 17,46	+ABS
	01-		R		**CF725**		Ø 15,87	Alu, -ABS
	01-05				**PF825**	Ate	Ø 23,81	Alu, +ABS, +ESP, LHD
	01-				**PF548**	Ate	Ø 23,81	Alu, +ABS, -ESP
	01-				**PF310**	Ate	Ø 22,20	+ABS, RHD
1.4 TDi Eng.AMF (55kW)	1/99-		R		**CF000**		Ø 17,46	+ABS
	1/99-		R		**CF239**		Ø 17,46	Alu, +ABS
	1/99-		R		**CF080**		Ø 15,87	-ABS
	1/99-		R		**CF725**		Ø 15,87	Alu, -ABS
	1/99-				**PF645**	Ate	Ø 22,20	Alu, +ABS, +ESP
	1/99-				**PF494**	Ate	Ø 22,20	Alu, +ABS, -ESP, LHD
	1/99-				**PF310**	Ate	Ø 22,20	+ABS, RHD
	1/99-				**PF041**	Ate	Ø 20,64	-ABS
	1/99-				**PF231**	Ate	Ø 20,64	Alu, -ABS
	1/99-				**CZ076**		Ø 19,05	
	1/00-				**PZ148**	Sachs	Ø 15,87	
1.6 16v GTI Eng.ARC/ AVY (92kW)	00-05				**PF825**	Ate	Ø 23,81	Alu, +ABS, +ESP, LHD
	9/00-				**PF548**	Ate	Ø 23,81	Alu, +ABS, -ESP
	9/00-				**PF310**	Ate	Ø 22,20	+ABS, RHD
	00-				**CZ077**	Fte	Ø 19,05	Pla
	00-				**CZ099**	Fte	Ø 19,05	
	9/00-				**PZ148**	Sachs	Ø 15,87	
1.7 SDi Eng.AKU (44kW)	9/98-		R		**CF000**		Ø 17,46	+ABS
	9/98-		R		**CF239**		Ø 17,46	Alu, +ABS
	9/98-		R		**CF080**		Ø 15,87	-ABS
	9/98-		R		**CF725**		Ø 15,87	Alu, -ABS
	9/98-				**PF645**	Ate	Ø 22,20	Alu, +ABS, +ESP
	9/98-				**PF494**	Ate	Ø 22,20	Alu, +ABS, -ESP, LHD
	9/98-				**PF310**	Ate	Ø 22,20	+ABS, RHD
	9/98-				**PF041**	Ate	Ø 20,64	-ABS
	9/98-				**PF231**	Ate	Ø 20,64	Alu, -ABS
Maggiolino, Cabrio (5C1, 5C7) 10/11-								
1.2 TSi, Cabrio Eng.CBZB/ CYVD (77kW)	11-		R		**CF1002**	Fte	Ø 20,64	Alu
	11-				**PF961**	Fte	Ø 22,20	Alu
	11-				**CZ080**	Sachs	Ø 19,05	Alu
1.4 TSi, Cabrio Eng.CAVD/ CNWA (118kW)	11-		R		**CF1002**	Fte	Ø 20,64	Alu
	11-				**PF961**	Fte	Ø 22,20	Alu
	11-				**CZ080**	Sachs	Ø 19,05	Alu
1.6 TDi, Cabrio Eng.CAYC (77kW)	11-		R		**CF1002**	Fte	Ø 20,64	Alu
	11-				**PF961**	Fte	Ø 22,20	Alu
	11-				**CZ080**	Sachs	Ø 19,05	Alu
2.0 TDi, Cabrio Eng.CJAA/ CFFB (103kW)	12-		R		**CF1002**	Fte	Ø 20,64	Alu
2.0 TSi Eng.CPPA/ CPLA (155kW)	11-		R		**CF1002**	Fte	Ø 20,64	Alu
	11-				**PF961**	Fte	Ø 22,20	Alu
2.0 TSi, Cabrio Eng.CBFA/ CCTA/ CCZA (147kW)	11-		R		**CF1002**	Fte	Ø 20,64	Alu
	11-				**PF961**	Fte	Ø 22,20	Alu
2.5 FSi Eng.CBUA/ CBTA/ CCCA (125kW)	11-		R		**CF1002**	Fte	Ø 20,64	Alu
	11-				**PF961**	Fte	Ø 22,20	Alu
	11-				**CZ080**	Sachs	Ø 19,05	Alu
New Beetle (9C1, 1C1) 1/98-9/11								
1.4 16v, Cabrio Eng.BCA (55kW)	01-				**PF799**	Ate	Ø 23,81	Alu, +ESP
	01-				**PF818**	Bch	Ø 23,81	Alu, -ESP, RHD
	01-				**PF234**		Ø 23,81	-ESP, LHD
	01-				**CZ077**	Fte	Ø 19,05	Pla

VOLKSWAGEN

		Spare Parts	F/R	L/R	FRITECH ref.		DIMENSIONS mm.	NOTE
1.4 16v, Cabrio Eng.BCA (55kW)	01-				**CZ099**	Fte	Ø 19,05	
	01-				**PZ064**	Sachs	Ø 15,87	Pla
	01-				**PZ107**	Sachs	Ø 15,87	
1.6 Eng.AWH (74kW)	99-				**PF241**	Ate	Ø 23,81	Ch -9CZY613782, Alu, +ESP, LHD
					PF799	Ate	Ø 23,81	Ch 9CZY613783-, Alu, +ESP, LHD
	99-00				**PF818**	Bch	Ø 23,81	Alu, -ESP, RHD
	99-00				**PF234**		Ø 23,81	-ESP, LHD
	10/99-9/00				**CZ076**		Ø 19,05	
	99-00				**PZ064**	Sachs	Ø 15,87	Pla
	99-00				**PZ107**	Sachs	Ø 15,87	
1.6 Eng.BSE/ BSF (75kW)	00-				**PF241**	Ate	Ø 23,81	Ch -9CZY613782, Alu, +ESP, LHD
					PF799	Ate	Ø 23,81	Ch 9CZY613783-, Alu, +ESP, LHD
	00-				**PF818**	Bch	Ø 23,81	Alu, -ESP, RHD
	00-				**PF234**		Ø 23,81	-ESP, LHD
	9/00-				**CZ076**		Ø 19,05	
	00-				**PZ064**	Sachs	Ø 15,87	Pla
	00-				**PZ107**	Sachs	Ø 15,87	
1.6, Cabrio Eng.AYD (75kW)	00-				**PF241**	Ate	Ø 23,81	Ch -9CZY613782, Alu, +ESP, LHD
					PF799	Ate	Ø 23,81	Ch 9CZY613783-, Alu, +ESP, LHD
	00-				**PF818**	Bch	Ø 23,81	Alu, -ESP, RHD
	00-				**PF234**		Ø 23,81	-ESP, LHD
	9/00-				**CZ076**		Ø 19,05	
	00-				**PZ064**	Sachs	Ø 15,87	Pla
	00-				**PZ107**	Sachs	Ø 15,87	
1.8 T., Cabrio Eng.APH/ AVC/ AWU/ AWV/ BKF (110kW)	99-				**PF241**	Ate	Ø 23,81	Ch -9CZY613782, Alu, +ESP, LHD
					PF799	Ate	Ø 23,81	Ch 9CZY613783-, Alu, +ESP, LHD
	99-				**PF818**	Bch	Ø 23,81	Alu, -ESP, RHD
	99-				**PF234**		Ø 23,81	-ESP, LHD
	10/99-				**CZ076**		Ø 19,05	
	99-				**PZ064**	Sachs	Ø 15,87	Pla
	99-				**PZ107**	Sachs	Ø 15,87	
1.9 TDi Eng.ALH (66kW)	98-				**PF241**	Ate	Ø 23,81	Ch -9CZY613782, Alu, +ESP, LHD
	-01				**PF799**	Ate	Ø 23,81	Ch 9CZY613783-, Alu, +ESP, LHD
	98-01				**PF818**	Bch	Ø 23,81	Alu, -ESP, RHD
	98-01				**PF234**		Ø 23,81	-ESP, LHD
	1/98-2/01				**CZ076**		Ø 19,05	
	98-01				**PZ064**	Sachs	Ø 15,87	Pla
	98-01				**PZ107**	Sachs	Ø 15,87	
1.9 TDi, Cabrio Eng.ATD/ AXR (74kW)	01-				**PF241**	Ate	Ø 23,81	Ch -9CZY613782, Alu, +ESP, LHD
					PF799	Ate	Ø 23,81	Ch 9CZY613783-, Alu, +ESP, LHD
	01-				**PF818**	Bch	Ø 23,81	Alu, -ESP, RHD
	01-				**PF234**		Ø 23,81	-ESP, LHD
	2/01-				**CZ076**		Ø 19,05	
	01-				**PZ064**	Sachs	Ø 15,87	Pla
	01-				**PZ107**	Sachs	Ø 15,87	
1.9 TDi, Cabrio Eng.BSW (77kW)	05-				**PF241**	Ate	Ø 23,81	Ch -9CZY613782, Alu, +ESP, LHD
					PF799	Ate	Ø 23,81	Ch 9CZY613783-, Alu, +ESP, LHD
	05-				**PF818**	Bch	Ø 23,81	Alu, -ESP, RHD
	05-				**PF234**		Ø 23,81	-ESP, LHD
2.0, Cabrio Eng.AEG/ AQY/ AVH/ AZJ/ BEJ/ BER/ BHP/ CBPA (85kW)	98-				**PF241**	Ate	Ø 23,81	Ch -9CZY613782, Alu, +ESP, LHD
					PF799	Ate	Ø 23,81	Ch 9CZY613783-, Alu, +ESP, LHD
	98-				**PF818**	Bch	Ø 23,81	Alu, -ESP, RHD
	98-				**PF234**		Ø 23,81	-ESP, LHD
	1/98-				**CZ076**		Ø 19,05	
	98-				**PZ064**	Sachs	Ø 15,87	Pla
	98-				**PZ107**	Sachs	Ø 15,87	
2.3 V5 Eng.AQN (125kW)	00-				**PF241**	Ate	Ø 23,81	Ch -9CZY613782, Alu, +ESP, LHD
					PF799	Ate	Ø 23,81	Ch 9CZY613783-, Alu, +ESP, LHD
	00-				**PF818**	Bch	Ø 23,81	Alu, -ESP, RHD
	00-				**PF234**		Ø 23,81	-ESP, LHD
	10/00-				**CZ076**		Ø 19,05	
	00-				**PZ064**	Sachs	Ø 15,87	Pla
	00-				**PZ107**	Sachs	Ø 15,87	

		Spare Parts	F/R	L/R	FRITECH ref.		DIMENSIONS mm.	NOTE
3.2 RSI Eng.AXJ (165kW)	00-				**PF241**	Ate	Ø 23,81	Ch -9CZY613782, Alu, +ESP, LHD
					PF799	Ate	Ø 23,81	Ch 9CZY613783-, Alu, +ESP, LHD
	00-				**PF818**	Bch	Ø 23,81	Alu, -ESP, RHD
	00-				**PF234**		Ø 23,81	-ESP, LHD
	00-				**PZ064**	Sachs	Ø 15,87	Pla
	00-				**PZ107**	Sachs	Ø 15,87	
Passat I (32, 33), Variant 5/73-7/80								
1.3 Eng.FY (40kW)	73-80		R		**CF001**		Ø 14,29	
	73-80		R		**CF532**		Ø 14,29	Alu
	73-80				**PF058**		Ø 20,64	+Servo
	73-80				**PF059**		Ø 20,64	+Servo
1.3 Eng.ZA (40kW)	73-80		R		**CF001**		Ø 14,29	
	73-80		R		**CF532**		Ø 14,29	Alu
	73-80				**PF058**		Ø 20,64	+Servo
	73-80				**PF059**		Ø 20,64	+Servo
1.3 Eng.ZF/ FZ (44kW)	73-78		R		**CF001**		Ø 14,29	
	73-78		R		**CF532**		Ø 14,29	Alu
	73-78				**PF058**		Ø 20,64	+Servo
	73-78				**PF059**		Ø 20,64	+Servo
1.5 Eng.YJ/ ZB (55kW)	73-75		R		**CF001**		Ø 14,29	M/T
	73-75		R		**CF532**		Ø 14,29	Alu, M/T
	73-75		R		**CF000**		Ø 17,46	A/T
	73-75		R		**CF239**		Ø 17,46	Alu, A/T
	73-75				**PF058**		Ø 20,64	+Servo, M/T
	73-75				**PF059**		Ø 20,64	Incl. Sweden, +Servo, M/T
	73-75				**PF060**		Ø 20,64	A/T
	73-75				**PF293**		Ø 20,64	A/T
1.5 Eng.ZC (63kW)	73-75		R		**CF001**		Ø 14,29	M/T
	73-75		R		**CF532**		Ø 14,29	Alu, M/T
	73-75		R		**CF000**		Ø 17,46	A/T
	73-75		R		**CF239**		Ø 17,46	Alu, A/T
	73-75				**PF058**		Ø 20,64	+Servo, M/T
	73-75				**PF059**		Ø 20,64	Incl. Sweden, +Servo, M/T
	73-75				**PF060**		Ø 20,64	A/T
	73-75				**PF293**		Ø 20,64	A/T
1.5 D Eng.CK (37kW)	77-80		R		**CF001**		Ø 14,29	M/T
	77-80		R		**CF532**		Ø 14,29	Alu, M/T
	77-80		R		**CF000**		Ø 17,46	A/T
	77-80		R		**CF239**		Ø 17,46	Alu, A/T
	77-80				**PF060**		Ø 20,64	M/T+A/T
	77-80				**PF293**		Ø 20,64	A/T
1.6 Eng.YP (63kW)	75-80		R		**CF001**		Ø 14,29	M/T
	75-80		R		**CF532**		Ø 14,29	Alu, M/T
	75-80		R		**CF000**		Ø 17,46	A/T
	75-80		R		**CF239**		Ø 17,46	Alu, A/T
	75-80				**PF058**		Ø 20,64	M/T
	75-80				**PF059**		Ø 20,64	M/T
	75-80				**PF293**		Ø 20,64	A/T
	78-80				**PF060**		Ø 20,64	M/T+A/T
1.6 (Exc. SW) Eng.FS (53kW)	75-80		R		**CF001**		Ø 14,29	M/T
	75-80		R		**CF532**		Ø 14,29	Alu, M/T
	75-80		R		**CF000**		Ø 17,46	A/T
	75-80		R		**CF239**		Ø 17,46	Alu, A/T
	75-80				**PF058**		Ø 20,64	M/T
	75-80				**PF059**		Ø 20,64	M/T
	75-80				**PF293**		Ø 20,64	A/T
	78-80				**PF060**		Ø 20,64	M/T+A/T
1.6 D SW Eng.CR (40kW)	79-80		R		**CF001**		Ø 14,29	M/T
	79-80		R		**CF532**		Ø 14,29	Alu, M/T
	79-80		R		**CF000**		Ø 17,46	A/T
	79-80		R		**CF239**		Ø 17,46	Alu, A/T
	79-80				**PF058**		Ø 20,64	M/T
	79-80				**PF059**		Ø 20,64	M/T
	79-80				**PF060**		Ø 20,64	A/T

VOLKSWAGEN

		Spare Parts	F/R	L/R	FRITECH ref.		DIMENSIONS mm.	NOTE
1.6 D SW Eng.CR (40kW)	79-80				**PF293**		Ø 20,64	A/T
1.6 i SW Eng.YS (81kW)	78-80		R		**CF001**		Ø 14,29	M/T
	78-80		R		**CF532**		Ø 14,29	Alu, M/T
	78-80		R		**CF000**		Ø 17,46	A/T
	78-80		R		**CF239**		Ø 17,46	Alu, A/T
	78-80				**PF058**		Ø 20,64	M/T
	78-80				**PF059**		Ø 20,64	M/T
	78-80				**PF060**		Ø 20,64	M/T+A/T
	78-80				**PF293**		Ø 20,64	A/T
1.6 SW Eng.YN / WY / WZ (55kW)	76-80		R		**CF001**		Ø 14,29	M/T
	76-80		R		**CF532**		Ø 14,29	Alu, M/T
	76-80		R		**CF000**		Ø 17,46	A/T
	76-80		R		**CF239**		Ø 17,46	Alu, A/T
	76-80				**PF058**		Ø 20,64	M/T
	76-80				**PF059**		Ø 20,64	M/T
	76-80				**PF293**		Ø 20,64	A/T
	78-80				**PF060**		Ø 20,64	M/T+A/T
Passat II (32B), Variant 8/80-3/88								
1.3 Eng.EP (44kW)	80-84		R		**CF001**		Ø 14,29	
	80-84		R		**CF080**		Ø 15,87	
	80-84		R		**CF000**		Ø 17,46	HDB
	8/84-86				**PF177**		Ø 20,64	LHD
	80-7/84				**PF178**		Ø 20,64	+Servo, LHD
	80-7/84				**PF179**		Ø 20,64	+Servo, RHD
1.3 Eng.EU/ FZ (44kW)	80-84		R		**CF001**		Ø 14,29	
	80-84		R		**CF080**		Ø 15,87	
	80-84		R		**CF000**		Ø 17,46	HDB
	8/84-86				**PF177**		Ø 20,64	LHD
	80-7/84				**PF178**		Ø 20,64	+Servo, LHD
	80-7/84				**PF179**		Ø 20,64	+Servo, RHD
1.3 Eng.FY (40kW)	80-83		R		**CF001**		Ø 14,29	
	80-83		R		**CF080**		Ø 15,87	
	80-83		R		**CF000**		Ø 17,46	HDB
	8/83-/7/84				**PF179**		Ø 20,64	+Servo, RHD
	8/83-7/84				**PF178**		Ø 20,64	+Servo, LHD
	8/84-7/85				**PF177**		Ø 20,64	LHD
1.6 Eng.DT/ WV/ YN (55kW)	80-84		R		**CF080**		Ø 15,87	M/T
	80-84		R		**CF000**		Ø 17,46	A/T
	8/80-7/81				**PF060**		Ø 20,64	A/T
	8/80-7/84				**PF178**		Ø 20,64	+Servo, LHD
	8/81-7/83				**PF058**		Ø 20,64	
	8/81-7/83				**PF059**		Ø 20,64	
	8/83-3/88				**PF179**		Ø 20,64	+Servo, RHD
	8/84-3/88				**PF177**		Ø 20,64	M/T, LHD
1.6 Eng.PP (51kW)	87-88		R		**CF080**		Ø 15,87	M/T
	87-88				**PF177**		Ø 20,64	M/T, LHD
	87-88				**PF179**		Ø 20,64	+Servo, RHD
1.6 Eng.RF/ RL (53kW)	86-88		R		**CF080**		Ø 15,87	M/T
	86-88				**PF177**		Ø 20,64	M/T, LHD
	86-88				**PF179**		Ø 20,64	+Servo, RHD
1.6 Eng.YP (63kW)	81-83		R		**CF080**		Ø 15,87	M/T
	81-83		R		**CF000**		Ø 17,46	A/T
	1/81-7/81				**PF060**		Ø 20,64	A/T
	8/81-83				**PF058**		Ø 20,64	
	8/81-83				**PF059**		Ø 20,64	
	81-83				**PF178**		Ø 20,64	+Servo, LHD
1.6 D Eng.CR/ JK (40kW)	80-84		R		**CF001**		Ø 14,29	M/T
	80-84		R		**CF080**		Ø 15,87	M/T
	80-84		R		**CF000**		Ø 17,46	M/T+A/T
	8/80-3/88				**PF179**		Ø 20,64	RHD
	8/81-7/83				**PF058**		Ø 20,64	M/T, LHD
	8/81-7/83				**PF059**		Ø 20,64	M/T, LHD
	8/83-7/84				**PF178**		Ø 20,64	M/T, LHD
	8/84-3/88				**PF177**		Ø 20,64	LHD

		Spare Parts	F/R	L/R	FRITECH ref.		DIMENSIONS mm.	NOTE
1.6 TD Eng.CY (51kW)	82-84		R		**CF000**		Ø 17,46	A/T
	8/84-3/88				**PF177**		Ø 20,64	LHD
	82-7/84				**PF178**		Ø 20,64	LHD
	82-7/84				**PF179**		Ø 20,64	RHD
	82-83				**PF060**		Ø 20,64	LHD
1.6 TD (Exc. SW) Eng.RA (59kW)	86-88				**PF177**		Ø 20,64	LHD
1.8 Eng.DS/ JN/ JV (66kW)	86-88		R		**CF080**		Ø 15,87	M/T
	86-88		R		**CF000**		Ø 17,46	A/T
	86-88				**PF177**		Ø 20,64	LHD
	86-88				**PF179**		Ø 20,64	RHD
1.8 Eng.RM (64kW)	86-88		R		**CF080**		Ø 15,87	M/T
	86-88		R		**CF000**		Ø 17,46	A/T
	86-88				**PF177**		Ø 20,64	LHD
	86-88				**PF179**		Ø 20,64	RHD
1.8 Syncro Eng.DS/ JN/ JV (66kW)	86-88		R		**CF080**		Ø 15,87	M/T
	86-88		R		**CF000**		Ø 17,46	A/T
	86-88				**PF177**		Ø 20,64	LHD
	86-88				**PF179**		Ø 20,64	RHD
1.9 Eng.WN (85kW)	81-83		R		**CF080**		Ø 15,87	
	81-83		R		**CF000**		Ø 17,46	
	1/81-7/83				**PF178**		Ø 20,64	LHD
	1/81-7/83				**PF179**		Ø 20,64	RHD
	8/81-7/83				**PF058**		Ø 20,64	LHD
2.0, Syncro Eng.HP/ JS (85kW)	83-84		R		**CF000**		Ø 17,46	
	8/83-3/88				**PF179**		Ø 20,64	RHD
	8/83-7/84				**PF178**		Ø 20,64	LHD
	8/84-3/88				**PF177**		Ø 20,64	LHD
2.2 Eng.KX (85kW)	85-88		R		**CF080**		Ø 15,87	Sweden
	85-3/88		R		**CF000**		Ø 17,46	Incl. Sweden
	85-88				**PF177**		Ø 20,64	LHD
	85-88				**PF178**		Ø 20,64	Sweden, LHD
	85-88				**PF179**		Ø 20,64	RHD
2.2 Syncro SW Eng.JT (88kW)	85-88		R		**CF080**		Ø 15,87	Sweden
	85-88				**PF177**		Ø 20,64	LHD
	85-88				**PF178**		Ø 20,64	Sweden, LHD
	85-88				**PF179**		Ø 20,64	RHD
2.2, Syncro Eng.KV/HY (100kW)	80-84		R		**CF080**		Ø 15,87	Sweden
	80-84		R		**CF000**		Ø 17,46	Incl. Sweden
	1/81-7/83				**PF178**		Ø 20,64	Sweden, LHD
	8/85-3/88				**PF177**		Ø 20,64	LHD
	8/85-3/88				**PF179**		Ø 20,64	RHD
Passat III (3A2, 3A5, 35I), Variant 2/88-5/97								
1.6 Eng.1F (53kW)	4/88-		R		**CF107**		Ø 19,05	Ch -31L085000
	4/88-		R		**CF121**		Ø 19,05	Ch -31L085000, Alu
	-91		R		**CF127**		Ø 20,64	Ch 31L085001-, Alu
	4/88-7/91				**PF033**	Ate	Ø 20,64	-ABS
	8/91-				**PF039**	Luc	Ø 22,20	-ABS
1.6 Eng.AEK/ AFT (74kW)	94-96		R		**CF127**		Ø 20,64	Alu
	94-96				**PF609**	Ate	Ø 23,81	Ch -3AZ300000, +ABS
	94-96				**PF493**	Ate	Ø 23,81	Ch 3AZT000001-, Alu, +ABS
	94-96				**PF039**	Luc	Ø 22,20	-ABS
	94-96				**PF248**	Luc	Ø 22,20	Alu, -ABS
	94-96				**PZ062**	Ate	Ø 19,05	
1.6 Eng.EZ/ HM (55kW)	4/88-		R		**CF107**		Ø 19,05	Ch -31L085000
	4/88-		R		**CF121**		Ø 19,05	Ch -31L085000, Alu
	-12/88		R		**CF127**		Ø 20,64	Ch 31L085001-, Alu
	4/88-				**PF033**	Ate	Ø 20,64	-ABS
1.6 TD Eng.RA/ SB (59kW)	88-93		R		**CF127**		Ø 20,64	Alu
	8/88-7/91				**PF033**	Ate	Ø 20,64	-ABS
	8/91-93				**PF039**	Luc	Ø 22,20	-ABS
	88-93				**CZ025**	Ate	Ø 23,81	Alu
	88-93				**CZ093**	Ate	Ø 23,81	
1.8 Eng.AAM (55kW)	90-96		R		**CF127**		Ø 20,64	Alu
					PF609	Ate	Ø 23,81	Ch -3AZ300000, +ABS

VOLKSWAGEN

		Spare Parts	F/R	L/R	FRITECH ref.		DIMENSIONS mm.	NOTE
1.8 Eng.AAM (55kW)	-96				**PF493**	Ate	Ø 23,81	Ch 3AZT000001-, Alu, +ABS
	90-7/91				**PF033**	Ate	Ø 20,64	-ABS
	10/93-96				**PF248**	Luc	Ø 22,20	Alu, -ABS
	8/91-96				**PF039**	Luc	Ø 22,20	-ABS
	90-96				**CZ025**	Ate	Ø 23,81	Alu
	90-96				**CZ093**	Ate	Ø 23,81	
	93-96				**PZ062**	Ate	Ø 19,05	
1.8 Eng.ABS/ ADZ (66kW)	88-97		R		**CF127**		Ø 20,64	Alu
	88-97				**PF609**	Ate	Ø 23,81	Ch -3AZ300000, +ABS
	88-97				**PF493**	Ate	Ø 23,81	Ch 3AZT000001-, Alu, +ABS
	8/88-7/91				**PF033**	Ate	Ø 20,64	-ABS
	10/93-97				**PF248**	Luc	Ø 22,20	Alu, -ABS
	8/91-97				**PF039**	Luc	Ø 22,20	-ABS
	88-97				**CZ025**	Ate	Ø 23,81	Alu
	88-97				**CZ093**	Ate	Ø 23,81	
	93-96				**PZ062**	Ate	Ø 19,05	
1.8 Eng.PB(KAT) (82kW)	88-92				**PF493**	Ate	Ø 23,81	Ch 3AZT000001-, Alu, +ABS
	4/88-7/90				**PF039**	Luc	Ø 22,20	-ABS
	2/88-92				**CZ025**	Ate	Ø 23,81	Alu
	2/88-92				**CZ093**	Ate	Ø 23,81	
1.8 Eng.PF (79kW)	88-93				**PF493**	Ate	Ø 23,81	Ch 3AZT000001-, Alu, +ABS
	4/88-7/90				**PF039**	Luc	Ø 22,20	-ABS
	88-93				**CZ025**	Ate	Ø 23,81	Alu
	88-93				**CZ093**	Ate	Ø 23,81	
1.8 16v Eng.KR (100-102kW)	88-89				**PF039**	Luc	Ø 22,20	-ABS
	88-89				**CZ025**	Ate	Ø 23,81	Alu
	88-89				**CZ093**	Ate	Ø 23,81	
1.8 G60 Syncro Eng.1H/ PG (118kW)	4/88-7/90				**PF039**	Luc	Ø 22,20	-ABS
	2/88-8/96				**CZ025**	Ate	Ø 23,81	Alu
	2/88-8/96				**CZ093**	Ate	Ø 23,81	
1.9 D Eng.1Y (50kW)	89-93		R		**CF127**		Ø 20,64	Alu
	89-7/91				**PF033**	Ate	Ø 20,64	-ABS
	8/91-93				**PF039**	Luc	Ø 22,20	-ABS
	89-93				**CZ025**	Ate	Ø 23,81	Alu
	89-93				**CZ093**	Ate	Ø 23,81	
1.9 TD Eng.AAZ (55kW)	91-97		R		**CF127**		Ø 20,64	Alu
	91-97				**PF609**	Ate	Ø 23,81	Ch -3AZ300000, +ABS
	91-97				**PF493**	Ate	Ø 23,81	Ch 3AZT000001-, Alu, +ABS
	3/91-7/91				**PF033**	Ate	Ø 20,64	-ABS
	10/93-97				**PF248**	Luc	Ø 22,20	Alu, -ABS
	8/91-97				**PF039**	Luc	Ø 22,20	-ABS
	91-97				**CZ025**	Ate	Ø 23,81	Alu
	91-97				**CZ093**	Ate	Ø 23,81	
	93-96				**PZ062**	Ate	Ø 19,05	
1.9 TDi Eng.1Z/ AHU (66kW)	93-97		R		**CF127**		Ø 20,64	Alu
	93-97				**PF609**	Ate	Ø 23,81	Ch -3AZ300000, +ABS
	93-97				**PF493**	Ate	Ø 23,81	Ch 3AZT000001-, Alu, +ABS
	93-97				**PF039**	Luc	Ø 22,20	-ABS
	93-97				**PF248**	Luc	Ø 22,20	Alu, -ABS
	93-97				**CZ025**	Ate	Ø 23,81	Alu
	93-97				**CZ093**	Ate	Ø 23,81	
	93-96				**PZ062**	Ate	Ø 19,05	
1.9 TDi Eng.AFN (81kW)	96-97		R		**CF127**		Ø 20,64	Alu
	96-97				**PF609**	Ate	Ø 23,81	Ch -3AZ300000, +ABS
	96-97				**PF493**	Ate	Ø 23,81	Ch 3AZT000001-, Alu, +ABS
	96-97				**PF039**	Luc	Ø 22,20	-ABS
	96-97				**PF248**	Luc	Ø 22,20	Alu, -ABS
	96-97				**CZ025**	Ate	Ø 23,81	Alu
	96-97				**CZ093**	Ate	Ø 23,81	
	96-97				**PZ062**	Ate	Ø 19,05	
2.0 Eng.2E (85kW)	90-96				**PF609**	Ate	Ø 23,81	Ch -3AZ300000, +ABS
	90-96				**PF493**	Ate	Ø 23,81	Ch 3AZT000001-, Alu, +ABS
	3/91-7/91				**PF033**	Ate	Ø 20,64	-ABS
	10/93-96				**PF248**	Luc	Ø 22,20	Alu, -ABS

		Spare Parts	F/R	L/R	FRITECH ref.		DIMENSIONS mm.	NOTE
2.0 Eng.2E (85kW)	8/91-96				**PF039**	Luc	Ø 22,20	-ABS
	90-96				**CZ025**	Ate	Ø 23,81	Alu
	90-96				**CZ093**	Ate	Ø 23,81	
	93-96				**PZ062**	Ate	Ø 19,05	
2.0 Eng.ADY/ AGG/ AKR (85kW)	90-96				**PF609**	Ate	Ø 23,81	Ch -3AZ300000, +ABS
	90-96				**PF493**	Ate	Ø 23,81	Ch 3AZT000001-, Alu, +ABS
	3/91-7/91				**PF033**	Ate	Ø 20,64	-ABS
	10/93-96				**PF248**	Luc	Ø 22,20	Alu, -ABS
	8/91-96				**PF039**	Luc	Ø 22,20	-ABS
	90-96				**CZ025**	Ate	Ø 23,81	Alu
	90-96				**CZ093**	Ate	Ø 23,81	
	93-96				**PZ062**	Ate	Ø 19,05	
2.0 Eng.AEP (79kW)	95-96				**PF609**	Ate	Ø 23,81	Ch -3AZ300000, +ABS
	95-96				**PF493**	Ate	Ø 23,81	Ch 3AZT000001-, Alu, +ABS
	95-96				**PZ062**	Ate	Ø 19,05	
2.0 16v Eng.9A (100kW)	88-93				**PF493**	Ate	Ø 23,81	Ch 3AZT000001-, Alu, +ABS
	88-93				**PF039**	Luc	Ø 22,20	-ABS
	88-93				**CZ025**	Ate	Ø 23,81	Alu
	88-93				**CZ093**	Ate	Ø 23,81	
2.0 GTi 16v Eng.ABF (110kW)	94-				**PF609**	Ate	Ø 23,81	Ch -3AZ300000, +ABS
	-97				**PF493**	Ate	Ø 23,81	Ch 3AZT000001-, Alu, +ABS
	94-97				**PF039**	Luc	Ø 22,20	-ABS
	94-97				**PF248**	Luc	Ø 22,20	Alu, -ABS
	94-97				**CZ025**	Ate	Ø 23,81	Alu
	94-97				**CZ093**	Ate	Ø 23,81	
	94-97				**PZ062**	Ate	Ø 19,05	
2.0 Syncro Eng.2E (85kW)	90-96				**PF609**	Ate	Ø 23,81	Ch -3AZ300000, +ABS
	90-96				**PF493**	Ate	Ø 23,81	Ch 3AZT000001-, Alu, +ABS
	3/91-7/91				**PF033**	Ate	Ø 20,64	-ABS
	10/93-96				**PF248**	Luc	Ø 22,20	Alu, -ABS
	8/91-96				**PF039**	Luc	Ø 22,20	-ABS
	90-96				**CZ025**	Ate	Ø 23,81	Alu
	90-96				**CZ093**	Ate	Ø 23,81	
	93-96				**PZ062**	Ate	Ø 19,05	
2.0 Syncro Eng.ADY/ AGG/ AKR (85kW)	90-96				**PF609**	Ate	Ø 23,81	Ch -3AZ300000, +ABS
	90-96				**PF493**	Ate	Ø 23,81	Ch 3AZT000001-, Alu, +ABS
	3/91-7/91				**PF033**	Ate	Ø 20,64	-ABS
	10/93-96				**PF248**	Luc	Ø 22,20	Alu, -ABS
	8/91-96				**PF039**	Luc	Ø 22,20	-ABS
	90-96				**CZ025**	Ate	Ø 23,81	Alu
	90-96				**CZ093**	Ate	Ø 23,81	
	93-96				**PZ062**	Ate	Ø 19,05	
2.8 VR6 Eng.AAA (128kW)	91-96				**PF609**	Ate	Ø 23,81	Ch -3AZ300000, +ABS
	91-96				**PF493**	Ate	Ø 23,81	Ch 3AZT000001-, Alu, +ABS
	10/93-12/96				**PF248**	Luc	Ø 22,20	Alu, -ABS
	8/91-12/96				**PF039**	Luc	Ø 22,20	-ABS
	6/91-8/96				**CZ025**	Ate	Ø 23,81	Alu
	6/91-8/96				**CZ093**	Ate	Ø 23,81	
	93-96				**PZ062**	Ate	Ø 19,05	
2.9 VR6 Syncro SW Eng.ABV (135-140kW)	94-97				**PF609**	Ate	Ø 23,81	Ch -3AZ300000, +ABS
	94-97				**PF493**	Ate	Ø 23,81	Ch 3AZT000001-, Alu, +ABS
	94-97				**PZ062**	Ate	Ø 19,05	
Passat IV (3B2, 3B5), Variant 8/96-11/00								
1.6 Eng.ADP (74kW)	-11/00				**PF277**	Luc	Ø 25,40	Ch 3BZY000001-, Alu, +ABS, +ESP, LHD
	10/96-				**PF223**	Luc	Ø 23,81	Ch -3BZX800000, +ABS, -ESP
	-9/00				**PF492**	Luc	Ø 25,40	Ch 3BZY000001-, +ABS, -ESP, LHD
	96-				**PF383**	Luc	Ø 23,81	Ch -3BZX800000, Alu, +ESP
	-11/00				**PF278**	Luc	Ø 25,40	Ch 3BZY000001-, Alu, RHD
	10/96-				**CZ052**	Sachs	Ø 22,20	Ch -3BZV100000, Alu
	10/96-				**CZ097**	Sachs	Ø 22,20	Ch -3BZV100000
					CZ074	Sachs	Ø 22,20	Ch 3BZV100001-, Pla
					CZ096	Sachs	Ø 22,20	Ch 3BZV100001-
	96-				**PZ076**	Sachs	Ø 19,05	Ch -3BZV100000, Alu
	96-				**PZ106**	Sachs	Ø 19,05	Ch -3BZV100000, Alu

VOLKSWAGEN

		Spare Parts	F/R	L/R	FRITECH ref.		DIMENSIONS mm.	NOTE
1.6 Eng.ADP (74kW)					**PZ085**	Sachs	Ø 19,05	Ch 3BZV100001-, Pla
					PZ105	Sachs	Ø 19,05	Ch 3BZV100001-, Alu
1.6 Eng.AHL/ ANA/ ARM (74kW)	-11/00				**PF277**	Luc	Ø 25,40	Ch 3BZY000001-, Alu, +ABS, +ESP, LHD
	10/96-				**PF223**	Luc	Ø 23,81	Ch -3BZX800000, +ABS, -ESP
	-9/00				**PF492**	Luc	Ø 25,40	Ch 3BZY000001-, +ABS, -ESP, LHD
	96-				**PF383**	Luc	Ø 23,81	Ch -3BZX800000, Alu, +ESP
	-11/00				**PF278**	Luc	Ø 25,40	Ch 3BZY000001-, Alu, RHD
	10/96-				**CZ052**	Sachs	Ø 22,20	Ch -3BZV100000, Alu
	10/96-				**CZ097**	Sachs	Ø 22,20	Ch -3BZV100000
					CZ074	Sachs	Ø 22,20	Ch 3BZV100001-, Pla
					CZ096	Sachs	Ø 22,20	Ch 3BZV100001-
	96-				**PZ076**	Sachs	Ø 19,05	Ch -3BZV100000, Alu
	96-				**PZ106**	Sachs	Ø 19,05	Ch -3BZV100000, Alu
					PZ085	Sachs	Ø 19,05	Ch 3BZV100001-, Pla
					PZ105	Sachs	Ø 19,05	Ch 3BZV100001-, Alu
1.8 Eng.AFY (85kW)	-11/00				**PF277**	Luc	Ø 25,40	Ch 3BZY000001-, Alu, +ABS, +ESP, LHD
	97-				**PF223**	Luc	Ø 23,81	Ch -3BZX800000, +ABS, -ESP
	-9/00				**PF492**	Luc	Ø 25,40	Ch 3BZY000001-, +ABS, -ESP, LHD
	97-				**PF383**	Luc	Ø 23,81	Ch -3BZX800000, Alu, +ESP
	-11/00				**PF278**	Luc	Ø 25,40	Ch 3BZY000001-, Alu, RHD
	97-				**CZ052**	Sachs	Ø 22,20	Ch -3BV100000, Alu
	97-				**CZ097**	Sachs	Ø 22,20	Ch -3BV100000
	-00				**CZ074**	Sachs	Ø 22,20	Ch 3BV100001-, Pla
	97-				**CZ096**	Sachs	Ø 22,20	Ch 3BV100001-
	97-				**PZ076**	Sachs	Ø 19,05	Ch -3BV100000, Alu
	97-				**PZ106**	Sachs	Ø 19,05	Ch -3BV100000, Alu
	0				**PZ105**	Sachs	Ø 19,05	Ch 3BV100001-, Alu
	-00				**PZ085**	Sachs	Ø 19,05	Ch 3BV100001-, Pla
1.8 20v Eng.ADR/ APT/ ARG (92kW)	-11/00				**PF277**	Luc	Ø 25,40	Ch 3BZY000001-, Alu, +ABS, +ESP, LHD
	10/96-				**PF223**	Luc	Ø 23,81	Ch -3BZX800000, +ABS, -ESP
	-9/00				**PF492**	Luc	Ø 25,40	Ch 3BZY000001-, +ABS, -ESP, LHD
	96-				**PF383**	Luc	Ø 23,81	Ch -3BZX800000, Alu, +ESP
	-11/00				**PF278**	Luc	Ø 25,40	Ch 3BZY000001-, Alu, RHD
	10/96-				**CZ052**	Sachs	Ø 22,20	Ch -3BZV100000, Alu
	10/96-				**CZ097**	Sachs	Ø 22,20	Ch -3BZV100000
					CZ074	Sachs	Ø 22,20	Ch 3BZV100001-, Pla
					CZ096	Sachs	Ø 22,20	Ch 3BZV100001-
	96-				**PZ076**	Sachs	Ø 19,05	Ch -3BZV100000, Alu
	96-				**PZ106**	Sachs	Ø 19,05	Ch -3BZV100000, Alu
					PZ085	Sachs	Ø 19,05	Ch 3BZV100001-, Pla
					PZ105	Sachs	Ø 19,05	Ch 3BZV100001-, Alu
1.8 20v Syncro Eng.ADR/ APT/ ARG (92kW)	-11/00				**PF277**	Luc	Ø 25,40	Ch 3BZY000001-, Alu, +ABS, +ESP, LHD
	10/96-				**PF223**	Luc	Ø 23,81	Ch -3BZX800000, +ABS, -ESP
	-9/00				**PF492**	Luc	Ø 25,40	Ch 3BZY000001-, +ABS, -ESP, LHD
	96-				**PF383**	Luc	Ø 23,81	Ch -3BZX800000, Alu, +ESP
	-11/00				**PF278**	Luc	Ø 25,40	Ch 3BZY000001-, Alu, -ESP, RHD
	96-00				**CZ074**	Sachs	Ø 22,20	Pla
	96-00				**CZ096**	Sachs	Ø 22,20	
1.8 T. Eng.AEB/ ANB/ APU (110-112kW)	-11/00				**PF277**	Luc	Ø 25,40	Ch 3BZY000001-, Alu, +ABS, +ESP, LHD
	10/96-				**PF223**	Luc	Ø 23,81	Ch -3BZX800000, +ABS, -ESP
	-9/00				**PF492**	Luc	Ø 25,40	Ch 3BZY000001-, +ABS, -ESP, LHD
	96-				**PF383**	Luc	Ø 23,81	Ch -3BZX800000, Alu, +ESP
	-11/00				**PF278**	Luc	Ø 25,40	Ch 3BZY000001-, Alu, RHD
	10/96-				**CZ052**	Sachs	Ø 22,20	Ch -3BZV100000, Alu
	10/96-				**CZ097**	Sachs	Ø 22,20	Ch -3BZV100000
					CZ074	Sachs	Ø 22,20	Ch 3BZV100001-, Pla
					CZ096	Sachs	Ø 22,20	Ch 3BZV100001-
	96-				**PZ076**	Sachs	Ø 19,05	Ch -3BZV100000, Alu
	96-				**PZ106**	Sachs	Ø 19,05	Ch -3BZV100000, Alu
					PZ085	Sachs	Ø 19,05	Ch 3BZV100001-, Pla
					PZ105	Sachs	Ø 19,05	Ch 3BZV100001-, Alu
1.9 TDi Eng.AFN/ AVG (81kW)	-11/00				**PF277**	Luc	Ø 25,40	Ch 3BZY000001-, Alu, +ABS, +ESP, LHD
	10/96-				**PF223**	Luc	Ø 23,81	Ch -3BZX800000, +ABS, -ESP
	-9/00				**PF492**	Luc	Ø 25,40	Ch 3BZY000001-, +ABS, -ESP, LHD

		Spare Parts	F/R	L/R	FRITECH ref.		DIMENSIONS mm.	NOTE
1.9 TDi Eng.AFN/ AVG (81kW)	96-				**PF383**	Luc	Ø 23,81	Ch -3BZX800000, Alu, +ESP
	-11/00				**PF278**	Luc	Ø 25,40	Ch 3BZY000001-, Alu, RHD
	-11/00				**CZ074**	Sachs	Ø 22,20	Ch 3BZV100001-, Pla
	-11/00				**CZ096**	Sachs	Ø 22,20	Ch 3BZV100001-
	10/96-				**CZ052**	Sachs	Ø 22,20	Ch -3BZW070000, Alu
	10/96-				**CZ097**	Sachs	Ø 22,20	Ch -3BZW070000
	10/96-				**PZ076**	Sachs	Ø 19,05	Ch -3BZW070000, Alu
	10/96-				**PZ106**	Sachs	Ø 19,05	Ch -3BZW070000, Alu
	-10/00				**PZ085**	Sachs	Ø 19,05	Ch 3BZW070001-, Pla
	-10/00				**PZ105**	Sachs	Ø 19,05	Ch 3BZW070001-, Alu
1.9 TDi Eng.AHH/ AHU (66kW)	-11/00				**PF277**	Luc	Ø 25,40	Ch 3BZY000001-, Alu, +ABS, +ESP, LHD
	10/96-				**PF223**	Luc	Ø 23,81	Ch -3BZX800000, +ABS, -ESP
	-9/00				**PF492**	Luc	Ø 25,40	Ch 3BZY000001-, +ABS, -ESP, LHD
	96-				**PF383**	Luc	Ø 23,81	Ch -3BZX800000, Alu, +ESP
	-11/00				**PF278**	Luc	Ø 25,40	Ch 3BZY000001-, Alu, RHD
	10/96-				**CZ052**	Sachs	Ø 22,20	Ch -3BZW070000, Alu
	10/96-				**CZ097**	Sachs	Ø 22,20	Ch -3BZW070000
					CZ074	Sachs	Ø 22,20	Ch 3BZW070001-, Pla
					CZ096	Sachs	Ø 22,20	Ch 3BZW070001-
	10/96-				**PZ076**	Sachs	Ø 19,05	Ch -3BZW070000, Alu
	10/96-				**PZ106**	Sachs	Ø 19,05	Ch -3BZW070000, Alu
					PZ085	Sachs	Ø 19,05	Ch 3BZW070001-, Pla
					PZ105	Sachs	Ø 19,05	Ch 3BZW070001-, Alu
1.9 TDi Eng.AVB (74kW)	-11/00				**PF277**	Luc	Ø 25,40	Ch 3BZY000001-, Alu, +ABS, +ESP, LHD
	-9/00				**PF492**	Luc	Ø 25,40	Ch 3BZY000001-, +ABS, -ESP, LHD
	00-11/00				**CZ074**	Sachs	Ø 22,20	Pla
	00-11/00				**CZ096**	Sachs	Ø 22,20	
	00-11/00				**PZ085**	Sachs	Ø 19,05	Pla
	00-11/00				**PZ105**	Sachs	Ø 19,05	Alu
1.9 TDi Syncro Eng.AFN/ AVG (81kW)	-11/00				**PF277**	Luc	Ø 25,40	Ch 3BZY000001-, Alu, +ABS, +ESP, LHD
	10/96-				**PF223**	Luc	Ø 23,81	Ch -3BZX800000, +ABS, -ESP
	-9/00				**PF492**	Luc	Ø 25,40	Ch 3BZY000001-, +ABS, -ESP, LHD
	96-				**PF383**	Luc	Ø 23,81	Ch -3BZX800000, Alu, +ESP
	-11/00				**PF278**	Luc	Ø 25,40	Ch 3BZY000001-, Alu, -ESP, RHD
	10/96-				**CZ052**	Sachs	Ø 22,20	Ch -3BZW070000, Alu
	10/96-				**CZ097**	Sachs	Ø 22,20	Ch -3BZW070000
					CZ074	Sachs	Ø 22,20	Ch 3BZW070001-, Pla
					CZ096	Sachs	Ø 22,20	Ch 3BZW070001-
					PZ085	Sachs	Ø 19,05	Ch 3BZW070001-, Pla
					PZ105	Sachs	Ø 19,05	Ch 3BZW070001-, Alu
1.9 TDi, 4motion Eng.AJM/ ATJ (85kW)	-11/00				**PF277**	Luc	Ø 25,40	Ch 3BZY000001-, Alu, +ABS, +ESP, LHD
	98-				**PF223**	Luc	Ø 23,81	Ch -3BZX800000, +ABS, -ESP
	-9/00				**PF492**	Luc	Ø 25,40	Ch 3BZY000001-, +ABS, -ESP, LHD
	98-				**PF383**	Luc	Ø 23,81	Ch -3BZX800000, Alu, +ESP
	-11/00				**PF278**	Luc	Ø 25,40	Ch 3BZY000001-, Alu, RHD
					CZ074	Sachs	Ø 22,20	Ch 3BZV100001-, Pla
					CZ096	Sachs	Ø 22,20	Ch 3BZV100001-
					PZ085	Sachs	Ø 19,05	Ch 3BZV100001-, Pla
					PZ105	Sachs	Ø 19,05	Ch 3BZV100001-, Alu
2.0, 4motion Eng.ASU/ AUZ (88kW)	-11/00				**PF277**	Luc	Ø 25,40	Ch 3BZY000001-, Alu, +ABS, +ESP, LHD
	-9/00				**PF492**	Luc	Ø 25,40	Ch 3BZY000001-, +ABS, -ESP, LHD
	4/00-11/00				**CZ074**	Sachs	Ø 22,20	Pla
	4/00-11/00				**CZ096**	Sachs	Ø 22,20	
	4/00-11/00				**PZ085**	Sachs	Ø 19,05	Pla
	4/00-11/00				**PZ105**	Sachs	Ø 19,05	Alu
2.3 VR5 Eng.AGZ (110kW)	-11/00				**PF277**	Luc	Ø 25,40	Ch 3BZY000001-, Alu, +ABS, +ESP, LHD
	10/96-				**PF223**	Luc	Ø 23,81	Ch -3BZX800000, +ABS, -ESP
	-9/00				**PF492**	Luc	Ø 25,40	Ch 3BZY000001-, +ABS, -ESP, LHD
	96-				**PF383**	Luc	Ø 23,81	Ch -3BZX800000, Alu, +ESP
	-11/00				**PF278**	Luc	Ø 25,40	Ch 3BZY000001-, Alu, RHD
	10/96-				**CZ052**	Sachs	Ø 22,20	Ch -3BZV100000, Alu
	10/96-				**CZ097**	Sachs	Ø 22,20	Ch -3BZV100000
					CZ074	Sachs	Ø 22,20	Ch 3BZV100001-, Pla
					CZ096	Sachs	Ø 22,20	Ch 3BZV100001-

VOLKSWAGEN

		Spare Parts	F/R	L/R	FRITECH ref.		DIMENSIONS mm.	NOTE
2.3 VR5 Eng.AGZ (110kW)	96-				**PZ076**	Sachs	Ø 19,05	Ch -3BZV100000, Alu
	96-				**PZ106**	Sachs	Ø 19,05	Ch -3BZV100000, Alu
					PZ085	Sachs	Ø 19,05	Ch 3BZV100001-, Pla
					PZ105	Sachs	Ø 19,05	Ch 3BZV100001-, Alu
2.3 VR5 Syncro Eng.AGZ (110kW)	-11/00				**PF277**	Luc	Ø 25,40	Ch 3BZY000001-, Alu, +ABS, +ESP, LHD
	10/96-				**PF223**	Luc	Ø 23,81	Ch -3BZX800000, +ABS, -ESP
	-9/00				**PF492**	Luc	Ø 25,40	Ch 3BZY000001-, +ABS, -ESP, LHD
	96-				**PF383**	Luc	Ø 23,81	Ch -3BZX800000, Alu, +ESP
	-11/00				**PF278**	Luc	Ø 25,40	Ch 3BZY000001-, Alu, -ESP, RHD
					CZ074	Sachs	Ø 22,20	Ch 3BZV100001-, Pla
					CZ096	Sachs	Ø 22,20	Ch 3BZV100001-
					PZ085	Sachs	Ø 19,05	Ch 3BZV100001-, Pla
					PZ105	Sachs	Ø 19,05	Ch 3BZV100001-, Alu
2.5 TDi, Syncro Eng.AFB/ AKN (110kW)	-00				**PF277**	Luc	Ø 25,40	Ch 3BZY000001-, Alu, +ABS, +ESP, LHD
	98-				**PF223**	Luc	Ø 23,81	Ch -3BZX800000, +ABS, -ESP
	-00				**PF492**	Luc	Ø 25,40	Ch 3BZY000001-, +ABS, -ESP, LHD
	98-				**PF383**	Luc	Ø 23,81	Ch -3BZX800000, Alu, +ESP
	-00				**PF278**	Luc	Ø 25,40	Ch 3BZY000001-, Alu, RHD
	98-00				**CZ074**	Sachs	Ø 22,20	Pla
	98-00				**CZ096**	Sachs	Ø 22,20	
	98-00				**PZ085**	Sachs	Ø 19,05	Pla
	98-00				**PZ105**	Sachs	Ø 19,05	Alu
2.8 V6 Eng.AGE (132kW)	-99				**PF277**	Luc	Ø 25,40	Ch 3BZY000001-, Alu, +ABS, +ESP, LHD
	97-				**PF223**	Luc	Ø 23,81	Ch -3BZX800000, +ABS, -ESP
	-99				**PF492**	Luc	Ø 25,40	Ch 3BZY000001-, +ABS, -ESP, LHD
	97-				**PF383**	Luc	Ø 23,81	Ch -3BZX800000, Alu, +ESP
	-99				**PF278**	Luc	Ø 25,40	Ch 3BZY000001-, Alu, RHD
	97-99				**CZ074**	Sachs	Ø 22,20	Pla
	97-99				**CZ096**	Sachs	Ø 22,20	
	97-99				**PZ085**	Sachs	Ø 19,05	Pla
	97-99				**PZ105**	Sachs	Ø 19,05	Alu
2.8 V6 Syncro Eng.AGE (132kW)	-99				**PF277**	Luc	Ø 25,40	Ch 3BZY000001-, Alu, +ABS, +ESP, LHD
	97-				**PF223**	Luc	Ø 23,81	Ch -3BZX800000, +ABS, -ESP
	-99				**PF492**	Luc	Ø 25,40	Ch 3BZY000001-, +ABS, -ESP, LHD
	97-				**PF383**	Luc	Ø 23,81	Ch -3BZX800000, Alu, +ESP
	-99				**PF278**	Luc	Ø 25,40	Ch 3BZY000001-, Alu, -ESP, RHD
2.8 V6, 4motion Eng.ACK/ ALG/ APR/ AQD	-11/00				**PF277**	Luc	Ø 25,40	Ch 3BZY000001-, Alu, +ABS, +ESP, LHD
(142kW)	10/96-				**PF223**	Luc	Ø 23,81	Ch -3BZX800000, +ABS, -ESP
	-9/00				**PF492**	Luc	Ø 25,40	Ch 3BZY000001-, +ABS, -ESP, LHD
	96-				**PF383**	Luc	Ø 23,81	Ch -3BZX800000, Alu, +ESP
	-11/00				**PF278**	Luc	Ø 25,40	Ch 3BZY000001-, Alu, RHD
	8/96-				**CZ052**	Sachs	Ø 22,20	Ch -3BZV100000, Alu, Exc. 4Motion
	8/96-				**CZ097**	Sachs	Ø 22,20	Ch -3BZV100000, Exc. 4Motion
					CZ074	Sachs	Ø 22,20	Ch 3BZV100001-, Pla
					CZ096	Sachs	Ø 22,20	Ch 3BZV100001-
	96-				**PZ076**	Sachs	Ø 19,05	Ch -3BZV100000, Alu, Exc. 4Motion
	96-				**PZ106**	Sachs	Ø 19,05	Ch -3BZV100000, Alu, Exc. 4Motion
					PZ085	Sachs	Ø 19,05	Ch 3BZV100001-, Pla
					PZ105	Sachs	Ø 19,05	Ch 3BZV100001-, Alu
2.8 V6, 4motion Eng.ATX (140kW)	-11/00				**PF277**	Luc	Ø 25,40	Ch 3BZY000001-, Alu, +ABS, +ESP, LHD
	99-				**PF223**	Luc	Ø 23,81	Ch -3BZX800000, +ABS, -ESP
	-9/00				**PF492**	Luc	Ø 25,40	Ch 3BZY000001-, +ABS, -ESP, LHD
	-11/00				**PF278**	Luc	Ø 25,40	Ch 3BZY000001-, Alu, RHD
	99-00				**CZ074**	Sachs	Ø 22,20	Pla
	99-00				**CZ096**	Sachs	Ø 22,20	
	99-00				**PZ085**	Sachs	Ø 19,05	Pla
	99-00				**PZ105**	Sachs	Ø 19,05	Alu
Passat V (3B3, 3B6), Variant 11/00-3/05								
1.6 Eng.ALZ (75kW)	5/02-				**PF826**	Ate	Ø 25,40	Alu
	11/00-				**PF277**	Luc	Ø 25,40	Ch -3BZ1400000, Alu, +ABS, +ESP, LHD
	11/00-				**PF278**	Luc	Ø 25,40	Alu, -ESP, RHD
					PF534	Trw	Ø 25,40	Ch 3BZ2000001-, Alu
	11/00-				**CZ074**	Sachs	Ø 22,20	Pla
	11/00-				**CZ096**	Sachs	Ø 22,20	

		Spare Parts	F/R	L/R	FRITECH ref.		DIMENSIONS mm.	NOTE
1.6 Eng.ALZ (75kW)	11/00-				**PZ085**	Sachs	Ø 19,05	Pla
	11/00-				**PZ105**	Sachs	Ø 19,05	Alu
1.8 20v Eng.ADR/ APT/ ARG (92kW)	5/02-				**PF826**	Ate	Ø 25,40	Alu
	11/00-				**PF277**	Luc	Ø 25,40	Ch -3BZ1400000, Alu, +ABS, +ESP, LHD
	11/00-				**PF278**	Luc	Ø 25,40	Alu, RHD
					PF534	Trw	Ø 25,40	Ch 3BZ2000001-, Alu
1.8 T. (Exc. SW), 4motion Eng.AWM (125kW)	01-05				**PF826**	Ate	Ø 25,40	Alu
	01-05				**CZ074**	Sachs	Ø 22,20	Pla
	01-05				**CZ096**	Sachs	Ø 22,20	
	01-05				**PZ085**	Sachs	Ø 19,05	Pla
	01-05				**PZ105**	Sachs	Ø 19,05	Alu
1.8 T. 20v Eng.AWL/ AWT (110kW)	11/00-				**PF277**	Luc	Ø 25,40	Ch -3BZ1400000, Alu, +ABS, +ESP, LHD
	11/00-				**PF278**	Luc	Ø 25,40	Alu, -ESP, RHD
					PF534	Trw	Ø 25,40	Ch 3BZ2000001-, Alu
	11/00-				**CZ074**	Sachs	Ø 22,20	Pla
	11/00-				**CZ096**	Sachs	Ø 22,20	
	11/00-				**PZ085**	Sachs	Ø 19,05	Pla
	11/00-				**PZ105**	Sachs	Ø 19,05	Alu
1.9 TDi Eng.AVB (74kW)	00-05				**PF826**	Ate	Ø 25,40	Alu
	11/00-				**PF277**	Luc	Ø 25,40	Ch -3BZ1400000, Alu, +ABS, +ESP, LHD
	11/00-				**PF278**	Luc	Ø 25,40	Alu, -ESP, RHD
					PF534	Trw	Ø 25,40	Ch 3BZ2000001-, Alu
	11/00-4/02				**CZ074**	Sachs	Ø 22,20	Pla
	11/00-4/02				**CZ096**	Sachs	Ø 22,20	
	11/00-				**PZ085**	Sachs	Ø 19,05	Pla
	11/00-				**PZ105**	Sachs	Ø 19,05	Alu
1.9 TDi Eng.AVF/ AWX (96kW)	5/02-				**PF826**	Ate	Ø 25,40	Alu
	00-				**PF277**	Luc	Ø 25,40	Ch -3BZ1400000, Alu, +ABS, +ESP, LHD
	00-05				**PF278**	Luc	Ø 25,40	Alu, -ESP, RHD
	-05				**PF534**	Trw	Ø 25,40	Ch 3BZ2000001-, Alu
	00-4/02				**CZ074**	Sachs	Ø 22,20	Pla
	00-4/02				**CZ096**	Sachs	Ø 22,20	
	00-				**PZ085**	Sachs	Ø 19,05	Ch -3B2003110, Pla
	00-				**PZ105**	Sachs	Ø 19,05	Ch -3B2003110, Alu
1.9 TDi 4motion Eng.AVF/ AWX (96kW)	00-05				**PF826**	Ate	Ø 25,40	Alu
	11/00-				**PF277**	Luc	Ø 25,40	Ch -3BZ1400000, Alu, +ABS, +ESP, LHD
	11/00-				**PF278**	Luc	Ø 25,40	Alu, RHD
					PF534	Trw	Ø 25,40	Ch 3BZ2000001-, Alu
	11/00-				**CZ074**	Sachs	Ø 22,20	Pla
	11/00-				**CZ096**	Sachs	Ø 22,20	
	11/00-				**PZ085**	Sachs	Ø 19,05	Ch -3B2003110, Pla
	11/00-				**PZ105**	Sachs	Ø 19,05	Ch -3B2003110, Alu
2.0 Eng.ALT (96kW)	01-05				**PF826**	Ate	Ø 25,40	Alu
	01-				**PF277**	Luc	Ø 25,40	Ch -3BZ1400000, Alu, +ABS, +ESP, LHD
	01-				**PF278**	Luc	Ø 25,40	Alu, -ESP, RHD
					PF534	Trw	Ø 25,40	Ch 3BZ2000001-, Alu
	01-				**CZ074**	Sachs	Ø 22,20	Pla
	01-				**CZ096**	Sachs	Ø 22,20	
	01-				**PZ085**	Sachs	Ø 19,05	Pla
	01-				**PZ105**	Sachs	Ø 19,05	Alu
2.0 Eng.AZM/ BFF (85kW)	00-05				**PF826**	Ate	Ø 25,40	Alu
	00-				**PF277**	Luc	Ø 25,40	Ch -3BZ1400000, Alu, +ABS, +ESP, LHD
	00-				**PF278**	Luc	Ø 25,40	Alu, -ESP, RHD
					PF534	Trw	Ø 25,40	Ch 3BZ2000001-, Alu
	11/00-				**CZ074**	Sachs	Ø 22,20	Pla
	11/00-				**CZ096**	Sachs	Ø 22,20	
	11/00-				**PZ085**	Sachs	Ø 19,05	Pla
	11/00-				**PZ105**	Sachs	Ø 19,05	Alu
2.0 4motion Eng.AZM (85kW)	00-05				**PF826**	Ate	Ø 25,40	Alu
	11/00-				**PF277**	Luc	Ø 25,40	Ch -3BZ1400000, Alu, +ABS, +ESP, LHD
	11/00-				**PF278**	Luc	Ø 25,40	Alu, RHD
					PF534	Trw	Ø 25,40	Ch 3BZ2000001-, Alu
	11/00-				**CZ074**	Sachs	Ø 22,20	Pla
	11/00-				**CZ096**	Sachs	Ø 22,20	

VOLKSWAGEN

		Spare Parts	F/R	L/R	FRITECH ref.		DIMENSIONS mm.	NOTE
2.0 4motion Eng.AZM (85kW)	11/00-				**PZ085**	Sachs	Ø 19,05	Pla
	11/00-				**PZ105**	Sachs	Ø 19,05	Alu
2.0 TDi Eng.BGW (100kW)	5/02-				**PF826**	Ate	Ø 25,40	Alu
					PF534	Trw	Ø 25,40	Ch 3BZ2000001-, Alu
2.3 VR5, 4motion Eng.AZX (125kW)	5/02-				**PF826**	Ate	Ø 25,40	Alu
	11/00-				**PF277**	Luc	Ø 25,40	Ch -3BZ1400000, Alu, +ABS, +ESP, LHD
	11/00-				**PF278**	Luc	Ø 25,40	Alu, -ESP, RHD
					PF534	Trw	Ø 25,40	Ch 3BZ2000001-, Alu
	11/00-				**CZ074**	Sachs	Ø 22,20	Pla
	11/00-				**CZ096**	Sachs	Ø 22,20	
	11/00-				**PZ085**	Sachs	Ø 19,05	Pla
	11/00-				**PZ105**	Sachs	Ø 19,05	Alu
2.5 TDi Eng.AKN (110kW)	00-05				**PF826**	Ate	Ø 25,40	Alu
	11/00-				**PF277**	Luc	Ø 25,40	Ch -3BZ1400000, Alu, +ABS, +ESP, LHD
	11/00-				**PF278**	Luc	Ø 25,40	Alu, -ESP, RHD
					PF534	Trw	Ø 25,40	Ch 3BZ2000001-, Alu
	11/00-				**CZ074**	Sachs	Ø 22,20	Pla
	11/00-				**CZ096**	Sachs	Ø 22,20	
	11/00-				**PZ085**	Sachs	Ø 19,05	Ch -3B2003110, Pla
	11/00-				**PZ105**	Sachs	Ø 19,05	Ch -3B2003110, Alu
2.5 TDi Eng.BDG (120kW)	03-05				**PF826**	Ate	Ø 25,40	Alu
					PF534	Trw	Ø 25,40	Ch 3BZ2000001-, Alu
	03-				**CZ074**	Sachs	Ø 22,20	Pla
	03-				**CZ096**	Sachs	Ø 22,20	
2.5 TDi 4motion Eng.AKN (110kW)	5/02-				**PF826**	Ate	Ø 25,40	Alu
	11/00-				**PF277**	Luc	Ø 25,40	Ch -3BZ1400000, Alu, +ABS, +ESP, LHD
	11/00-				**PF278**	Luc	Ø 25,40	Alu, RHD
					PF534	Trw	Ø 25,40	Ch 3BZ2000001-, Alu
	11/00-				**CZ074**	Sachs	Ø 22,20	Pla
	11/00-				**CZ096**	Sachs	Ø 22,20	
	11/00-				**PZ085**	Sachs	Ø 19,05	Ch -3B2003110, Pla
	11/00-				**PZ105**	Sachs	Ø 19,05	Ch -3B2003110, Alu
2.5 TDi 4motion Eng.BAU/ BDH (132kW)	5/02-				**PF826**	Ate	Ø 25,40	Alu
	03-05				**PF277**	Luc	Ø 25,40	Ch -3BZ1400000, Alu, +ABS, +ESP, LHD
	03-05				**PF278**	Luc	Ø 25,40	Alu, -ESP, RHD
					PF534	Trw	Ø 25,40	Ch 3BZ2000001-, Alu
	03-05				**CZ074**	Sachs	Ø 22,20	Pla
	03-05				**CZ096**	Sachs	Ø 22,20	
2.5 TDi, 4motion Eng.AFB (110kW)	5/02-				**PF826**	Ate	Ø 25,40	Alu
	11/00-				**PF277**	Luc	Ø 25,40	Ch -3BZ1400000, Alu, +ABS, +ESP, LHD
	11/00-				**PF278**	Luc	Ø 25,40	Alu, -ESP, RHD
					PF534	Trw	Ø 25,40	Ch 3BZ2000001-, Alu
	11/00-				**CZ074**	Sachs	Ø 22,20	Pla
	11/00-				**CZ096**	Sachs	Ø 22,20	
	11/00-				**PZ085**	Sachs	Ø 19,05	Ch -3B2003110, Pla
	11/00-				**PZ105**	Sachs	Ø 19,05	Ch -3B2003110, Alu
2.8 30v 4motion Eng.AMX/ ATQ (142kW)	5/02-				**PF826**	Ate	Ø 25,40	Alu
	11/00-				**PF277**	Luc	Ø 25,40	Ch -3BZ1400000, Alu, +ABS, +ESP, LHD
	11/00-				**PF278**	Luc	Ø 25,40	Alu, -ESP, RHD
					PF534	Trw	Ø 25,40	Ch 3BZ2000001-, Alu
	11/00-				**CZ074**	Sachs	Ø 22,20	Pla
	11/00-				**CZ096**	Sachs	Ø 22,20	
	11/00-				**PZ085**	Sachs	Ø 19,05	Pla
	11/00-				**PZ105**	Sachs	Ø 19,05	Alu
4.0 W8 4motion Eng.BDN/ BDP (202kW)	5/02-				**PF826**	Ate	Ø 25,40	Alu
Passat VI (3C2, 3C5), Variant 3/05-12/10								
1.9 TDi Eng.BKC/ BLS/ BXE (77kW)	05-7/10				**CZ080**	Sachs	Ø 19,05	Alu
2.0 FSI, 4motion Eng.BLR/ BLY/ BVY/ BVX/ BVZ (110kW)	05-7/10				**CZ080**	Sachs	Ø 19,05	Alu
Passat VII Coupe CC (357, 358) 6/08-								
1.4 TSi Multifuel Eng.CKMA (118kW)	11-9/11				**CZ080**	Sachs	Ø 19,05	Alu, Cod. ID PR 0EJ
1.8 TSi Eng.BZB/ CDAA (118kW)	08-				**CZ080**	Sachs	Ø 19,05	Alu, Cod. ID PR 0EJ
1.8 TSi Eng.CDAB/ CGYA (112kW)	08-				**CZ080**	Sachs	Ø 19,05	Alu, Cod. ID PR 0EJ

		Spare Parts	F/R	L/R	FRITECH ref.		DIMENSIONS mm.	NOTE
2.0 BlueTDi Eng.CBAC (105kW)	09-				**CZ080**	Sachs	Ø 19,05	Alu, Cod. ID PR 0EJ
2.0 TDi Eng.CBAA/ CFFA (100kW)	08-				**CZ080**	Sachs	Ø 19,05	Alu, Cod. ID PR 0EJ
2.0 TDi Eng.CBBA (120kW)	6/08-				**CZ080**	Sachs	Ø 19,05	Alu, Cod. ID PR 0EJ
2.0 TDi , 4motion Eng.CBAB/ CFFB (103kW)	08-9/11				**CZ080**	Sachs	Ø 19,05	Alu, Cod. ID PR 0EJ
2.0 TDi, 4motion Eng.CBBB/CFGB/CLLA (125kW)	08-9/11				**CZ080**	Sachs	Ø 19,05	Alu, Cod. ID PR 0EJ
2.0 TSi Eng.CAWB/ CCTA (147kW)	08-9/11				**CZ080**	Sachs	Ø 19,05	Alu, Cod ID PR 0EJ
2.0 TSi Eng.CCZB (155kW)	10-9/11				**CZ080**	Sachs	Ø 19,05	Alu, Cod. ID PR 0EJ
3.6 Fsi V6, 4motion Eng.BWS/ BLV (220kW)	08-				**CZ080**	Sachs	Ø 19,05	Alu, Cod. ID PR 0EJ
Passat VII, Variant, Alltrack (362, 365) 8/10-8/14								
1.4 TSi Eng.CAXA (90kW)	11-				**CZ080**	Sachs	Ø 19,05	Alu, Cod. ID PR 0EJ
1.4 TSi Eng.CDGA (110kW)	11-				**CZ080**	Sachs	Ø 19,05	Alu, Cod. ID PR 0EJ
1.4 TSi MultiFuel Eng.CKMA (118kW)	10-				**CZ080**	Sachs	Ø 19,05	Alu, Cod. ID PR 0EJ
1.6 TDi Eng.CAYC (77kW)	11-				**CZ080**	Sachs	Ø 19,05	Alu, Cod. ID PR 0EJ
1.8 TSi Eng.CDAA (118kW)	11-				**CZ080**	Sachs	Ø 19,05	Alu, Cod. ID PR 0EJ
2.0 TDi Eng.CFFA (100kW)	10-				**CZ080**	Sachs	Ø 19,05	Alu, Cod. ID PR 0EJ
2.0 TDi, 4motion Eng.CFFB (103kW)	11-				**CZ080**	Sachs	Ø 19,05	Alu, Cod. ID PR 0EJ
2.0 TDi, 4motion Eng.CFGB/ CLLA (125kW)	11-				**CZ080**	Sachs	Ø 19,05	Alu, Cod. ID PR 0EJ
2.0 TSi Eng.CCZB (155kW)	11-				**CZ080**	Sachs	Ø 19,05	Alu, Cod. ID PR 0EJ
3.6 FSi 4motion Eng.BWS (220kW)	11-				**CZ080**	Sachs	Ø 19,05	Alu, Cod. ID PR 0EJ
Polo I (86) 3/75-9/81								
0.8 Eng.HE (25kW)	75-81		R		**CF001**		Ø 14,29	-CF
	75-81		R		**CF532**		Ø 14,29	Alu, -CF
	75-81		R		**CF000**		Ø 17,46	+CF
	75-81		R		**CF239**		Ø 17,46	Alu, +CF
0.9 Eng.HA (29kW)	75-81		R		**CF001**		Ø 14,29	-CF
	75-81		R		**CF532**		Ø 14,29	Alu, -CF
	75-81		R		**CF000**		Ø 17,46	+CF
	75-81		R		**CF239**		Ø 17,46	Alu, +CF
1.1 Eng.HB (37kW)	75-81		R		**CF001**		Ø 14,29	-CF
	75-81		R		**CF532**		Ø 14,29	Alu, -CF
	75-81		R		**CF000**		Ø 17,46	+CF
	75-81		R		**CF239**		Ø 17,46	Alu, +CF
	75-81				**PF058**		Ø 20,64	+Servo
1.1 Eng.HC (44kW)	75-81		R		**CF001**		Ø 14,29	-CF
	75-81		R		**CF532**		Ø 14,29	Alu, -CF
	75-81		R		**CF000**		Ø 17,46	+CF
	75-81		R		**CF239**		Ø 17,46	Alu, +CF
	75-81				**PF058**		Ø 20,64	+Servo
1.3 Eng.HH (44kW)	76-81		R		**CF001**		Ø 14,29	-CF
	76-81		R		**CF532**		Ø 14,29	Alu, -CF
	76-81		R		**CF000**		Ø 17,46	+CF
	76-81		R		**CF239**		Ø 17,46	Alu, +CF
	76-81				**PF058**		Ø 20,64	+Servo
Polo II (86C, 80), Classic, Coupe 10/81-9/94								
1.0 Eng.GL (29kW)	81-86		R		**CF001**		Ø 14,29	Ch -F127903, -CF
	81-86		R		**CF532**		Ø 14,29	Ch -F127903, Alu, -CF
	81-86		R		**CF080**		Ø 15,87	Ch F127904-, -CF
	81-86		R		**CF725**		Ø 15,87	Ch F127904-, Alu, -CF
	81-86		R		**CF000**		Ø 17,46	Ch -F127903, +CF
	81-86		R		**CF239**		Ø 17,46	Ch -F127904, Alu, +CF
	81-86		R		**CF107**		Ø 19,05	Ch F127904-, +CF
	81-86		R		**CF121**		Ø 19,05	Ch F127904-, Alu, +CF
	10/81-				**PF058**		Ø 20,64	Ch -F127903, +Servo
	-86				**PF005**		Ø 20,64	Ch F127904-, +Servo
1.0, Kat Eng.AAK/ AAU/ ACM/ HZ (33-37kW)	86-94		R		**CF001**		Ø 14,29	Ch -F127903, -CF
	86-94		R		**CF532**		Ø 14,29	Ch -F127903, Alu, -CF
	86-94		R		**CF080**		Ø 15,87	Ch F127904-, -CF
	86-94		R		**CF725**		Ø 15,87	Ch F127904-, Alu, -CF
	86-94		R		**CF000**		Ø 17,46	Ch -F127903, +CF
	86-94		R		**CF239**		Ø 17,46	Ch -F127904, Alu, +CF
	86-94		R		**CF107**		Ø 19,05	Ch F127904-, +CF
	86-94		R		**CF121**		Ø 19,05	Ch F127904-, Alu, +CF
	86-				**PF058**		Ø 20,64	Ch -F127903, +Servo
	-94				**PF005**		Ø 20,64	Ch F127904-, +Servo

VOLKSWAGEN

		Spare Parts	F/R	L/R	FRITECH ref.		DIMENSIONS mm.	NOTE
1.1 (Exc. Classic) Eng.HB (37kW)	81-89		R		**CF001**		Ø 14,29	-CF
	81-89		R		**CF532**		Ø 14,29	Alu, -CF
	81-89		R		**CF000**		Ø 17,46	+CF
	81-89		R		**CF239**		Ø 17,46	Alu, +CF
	81-89		R		**CF107**		Ø 19,05	Ch F127904-, +CF
	10/81-				**PF058**		Ø 20,64	Ch -F127903, +Servo
1.3 Eng.3F (57kW)	91-94		R		**CF001**		Ø 14,29	Ch -F127903, -CF
	91-94		R		**CF532**		Ø 14,29	Ch -F127903, Alu, -CF
	91-94		R		**CF080**		Ø 15,87	Ch F127904-, -CF
	91-94		R		**CF725**		Ø 15,87	Ch F127904-, Alu, -CF
	91-94		R		**CF000**		Ø 17,46	Ch -F127903, +CF
	91-94		R		**CF239**		Ø 17,46	Ch -F127904, Alu, +CF
	91-94		R		**CF107**		Ø 19,05	Ch F127904-, +CF
	91-94		R		**CF121**		Ø 19,05	Ch F127904-, Alu, +CF
	91-				**PF058**		Ø 20,64	Ch -F127903, +Servo
	-94				**PF005**		Ø 20,64	Ch F127904-, +Servo
1.3 Eng.GT (43kW)	82-88		R		**CF001**		Ø 14,29	Ch -F127903, -CF
	82-88		R		**CF532**		Ø 14,29	Ch -F127903, Alu, -CF
	82-88		R		**CF080**		Ø 15,87	Ch F127904-, -CF
	82-88		R		**CF725**		Ø 15,87	Ch F127904-, Alu, -CF
	82-88		R		**CF000**		Ø 17,46	Ch -F127903, +CF
	82-88		R		**CF239**		Ø 17,46	Ch -F127904, Alu, +CF
1.3 Eng.HW (37kW)	83-85		R		**CF001**		Ø 14,29	Ch -F127903, -CF
	83-85		R		**CF532**		Ø 14,29	Ch -F127903, Alu, -CF
	83-85		R		**CF080**		Ø 15,87	Ch F127904-, -CF
	83-85		R		**CF725**		Ø 15,87	Ch F127904-, Alu, -CF
	83-85		R		**CF000**		Ø 17,46	Ch -F127903, +CF
	83-85		R		**CF239**		Ø 17,46	Ch -F127904, Alu, +CF
	83-85		R		**CF107**		Ø 19,05	Ch F127904-, +CF
1.3 (Exc. Classic) Eng.HH (44kW)	81-83		R		**CF001**		Ø 14,29	Ch -F127903, -CF
	81-83		R		**CF532**		Ø 14,29	Ch -F127903, Alu, -CF
	81-83		R		**CF080**		Ø 15,87	Ch F127904-, -CF
	81-83		R		**CF725**		Ø 15,87	Ch F127904-, Alu, -CF
	81-83		R		**CF000**		Ø 17,46	Ch -F127903, +CF
	81-83		R		**CF239**		Ø 17,46	Ch -F127904, Alu, +CF
	81-83		R		**CF107**		Ø 19,05	Ch F127904-, +CF
	81-83		R		**CF121**		Ø 19,05	Ch F127904-, Alu, +CF
	10/81-				**PF058**		Ø 20,64	Ch -F127903, +Servo
	-83				**PF005**		Ø 20,64	Ch F127904-, +Servo
1.3 (Exc. Coupe) Eng.HJ (43kW)	81-82		R		**CF001**		Ø 14,29	Ch -F127903, -CF
	81-82		R		**CF532**		Ø 14,29	Ch -F127903, Alu, -CF
	81-82		R		**CF080**		Ø 15,87	Ch F127904-, -CF
	81-82		R		**CF725**		Ø 15,87	Ch F127904-, Alu, -CF
	81-82		R		**CF000**		Ø 17,46	Ch -F127903, +CF
	81-85		R		**CF239**		Ø 17,46	Ch -F127904, Alu, +CF
	81-83		R		**CF107**		Ø 19,05	Ch F127904-, +CF
	81-83		R		**CF121**		Ø 19,05	Ch F127904-, Alu, +CF
	10/81-				**PF058**		Ø 20,64	Ch -F127903, +Servo
	-82				**PF005**		Ø 20,64	Ch F127904-, +Servo
1.3 D Eng.MN (33kW)	86-90		R		**CF080**		Ø 15,87	-CF
	86-90		R		**CF725**		Ø 15,87	Alu, -CF
	86-90		R		**CF107**		Ø 19,05	Ch F127904-, +CF
	86-90		R		**CF121**		Ø 19,05	Alu, +CF
	-90				**PF005**		Ø 20,64	Ch F127904-, +Servo
1.3 G40 (Exc. Classic) Eng.PY (83kW)	87-94		R		**CF080**		Ø 15,87	-CF
	87-94		R		**CF725**		Ø 15,87	Alu, -CF
	87-94		R		**CF107**		Ø 19,05	Ch F127904-, +CF
	87-94		R		**CF121**		Ø 19,05	Alu, +CF
	-94				**PF005**		Ø 20,64	Ch F127904-, +Servo
1.3, Kat Eng.2G/ AAV/ HK/ MH/ NZ (40kW)	83-94		R		**CF001**		Ø 14,29	Ch -F127903, -CF
	83-94		R		**CF532**		Ø 14,29	Ch -F127903, Alu, -CF
	83-94		R		**CF080**		Ø 15,87	Ch F127904-, -CF
	83-94		R		**CF725**		Ø 15,87	Ch F127904-, Alu, -CF
	83-94		R		**CF000**		Ø 17,46	Ch -F127903, +CF

		Spare Parts	F/R	L/R	FRITECH ref.		DIMENSIONS mm.	NOTE
1.3, Kat Eng.2G/ AAV/ HK/ MH/ NZ (40kW)	83-94		R		**CF239**		Ø 17,46	Ch -F127904, Alu, +CF
	83-94		R		**CF107**		Ø 19,05	Ch F127904-, +CF
	83-94		R		**CF121**		Ø 19,05	Ch F127904-, Alu, +CF
	83-				**PF058**		Ø 20,64	Ch -F127903, +Servo
	-94				**PF005**		Ø 20,64	Ch F127904-, +Servo
1.3, Kat (Exc. Classic) Eng.3F/ GK (55kW)	89-94		R		**CF001**		Ø 14,29	Ch -F127903, -CF
	89-94		R		**CF532**		Ø 14,29	Ch -F127903, Alu, -CF
	89-94		R		**CF080**		Ø 15,87	Ch F127904-, -CF
	89-94		R		**CF725**		Ø 15,87	Ch F127904-, Alu, -CF
	89-94		R		**CF000**		Ø 17,46	Ch -F127903, +CF
	89-94		R		**CF239**		Ø 17,46	Ch -F127904, Alu, +CF
	89-94		R		**CF107**		Ø 19,05	Ch F127904-, +CF
	89-94		R		**CF121**		Ø 19,05	Ch F127904-, Alu, +CF
	89-				**PF058**		Ø 20,64	Ch -F127903, +Servo
	-94				**PF005**		Ø 20,64	Ch F127904-, +Servo
1.4 D Eng.1W (35kW)	90-94		R		**CF080**		Ø 15,87	-CF
	90-94		R		**CF725**		Ø 15,87	Alu, -CF
	90-94		R		**CF107**		Ø 19,05	Ch F127904-, +CF
	90-94		R		**CF121**		Ø 19,05	Alu, +CF
	-94				**PF005**		Ø 20,64	Ch F127904-, +Servo
Polo III (6N1) 10/94-10/99								
1.0 Eng.AER/ ALL (37kW)	96-99		R		**CF000**		Ø 17,46	
	96-99		R		**CF239**		Ø 17,46	Alu
	96-99				**PF494**	Ate	Ø 22,20	Alu, +ABS, LHD
	96-99				**PF041**	Ate	Ø 20,64	-ABS
1.0 Eng.AEV (33kW)	94-		R		**CF000**		Ø 17,46	
	94-96		R		**CF239**		Ø 17,46	Alu
	10/94-				**PF310**	Ate	Ø 22,20	Ch -6NT2500000, +ABS, LHD
					PF494	Ate	Ø 22,20	Ch 6NZV000001-, Alu, +ABS, LHD
	94-96				**PF041**	Ate	Ø 20,64	-ABS
1.3 Eng.ADX (40kW)	94-7/95		R		**CF000**		Ø 17,46	
	94-95		R		**CF239**		Ø 17,46	Alu
	94-				**PF310**	Ate	Ø 22,20	Ch -6NT2500000, +ABS, LHD
					PF494	Ate	Ø 22,20	Ch 6NZV000001-, Alu, +ABS, LHD
	94-7/95				**PF041**	Ate	Ø 20,64	-ABS
1.4 Eng.AEX/ AKV/ ANX/ APQ (40-44kW)	95-99		R		**CF107**	Fte	Ø 19,05	SW, +ABS
	95-99		R		**CF000**		Ø 17,46	Exc. Germany
	95-99		R		**CF239**		Ø 17,46	Alu
	95-				**PF310**	Ate	Ø 22,20	Ch -6NZT250000, +ABS, LHD
					PF494	Ate	Ø 22,20	Ch 6NZV000001-, Alu, +ABS, LHD
	95-99				**PF041**	Ate	Ø 20,64	Exc. Germany, -ABS
1.4 16v Eng.AFH (74kW)	96-99		R		**CF107**	Fte	Ø 19,05	SW, +ABS
	96-99		R		**CF000**		Ø 17,46	Exc. Germany
	96-99		R		**CF239**		Ø 17,46	Alu
	-99				**PF548**	Ate	Ø 23,81	Ch 6NZV000001-, Alu, +ABS, -ESP
	96-99				**PF310**	Ate	Ø 22,20	-ABS
1.6 Eng.AEA/ AEE/ AHS (55kW)	94-99		R		**CF107**	Fte	Ø 19,05	SW, +ABS
	94-99		R		**CF000**		Ø 17,46	
	94-99		R		**CF239**		Ø 17,46	Alu
	10/94-				**PF310**	Ate	Ø 22,20	Ch -6NT2500000, +ABS, LHD
					PF494	Ate	Ø 22,20	Ch 6NZV000001-, Alu, +ABS, LHD
	94-99				**PF041**	Ate	Ø 20,64	-ABS
1.6 16v GTI Eng.AJV (88kW)	98-99		R		**CF107**	Fte	Ø 19,05	SW, +ABS
	98-99				**PF548**	Ate	Ø 23,81	Alu, +ABS, -ESP
1.7 SDi Eng.AHG (42kW)	97-99		R		**CF107**	Fte	Ø 19,05	SW, +ABS
	97-99		R		**CF000**		Ø 17,46	
	97-99		R		**CF239**		Ø 17,46	Alu
	-99				**PF494**	Ate	Ø 22,20	Ch 6NZV000001-, Alu, +ABS, LHD
	97-99				**PF041**	Ate	Ø 20,64	-ABS
1.7 SDi Eng.AKU (44kW)	97-99		R		**CF107**	Fte	Ø 19,05	SW, +ABS
	97-99		R		**CF000**		Ø 17,46	
	97-99		R		**CF239**		Ø 17,46	Alu
					PF494	Ate	Ø 22,20	Ch 6NZV000001-, Alu, +ABS, LHD
	97-99				**PF041**	Ate	Ø 20,64	-ABS

VOLKSWAGEN

		Spare Parts	F/R	L/R	FRITECH ref.		DIMENSIONS mm.	NOTE
1.9 D Eng.AEF (47kW)	94-99		R		**CF107**	Fte	Ø 19,05	SW, +ABS
	94-99		R		**CF000**		Ø 17,46	
	94-99		R		**CF239**		Ø 17,46	Alu
	10/94-				**PF310**	Ate	Ø 22,20	Ch -6NT2500000, +ABS
					PF494	Ate	Ø 22,20	Ch 6NZV000001-, Alu, +ABS, LHD
	94-99				**PF041**	Ate	Ø 20,64	-ABS
1.9 SDi Eng.AGD (47kW)	96-99		R		**CF107**	Fte	Ø 19,05	SW, +ABS
	96-99		R		**CF000**		Ø 17,46	
	96-99		R		**CF239**		Ø 17,46	Alu
	96-				**PF310**	Ate	Ø 22,20	Ch -6NT2500000, +ABS
					PF494	Ate	Ø 22,20	Ch 6NZV000001-, Alu, +ABS, LHD
	96-99				**PF041**	Ate	Ø 20,64	-ABS
Polo III-IV (6KV2) Classic 11/95-9/01								
1.4 Eng.AEX/ AKV/ ANX/ APQ (40-44kW)	95-01		R		**CF121**		Ø 19,05	Alu, +ABS
	95-01		R		**CF000**		Ø 17,46	-ABS
	95-01		R		**CF239**		Ø 17,46	Alu, -ABS
	95-01				**PF310**	Ate	Ø 22,20	+ABS
	95-01				**PF041**	Ate	Ø 20,64	-ABS
	-99				**PF583**	Bch	Ø 22,20	Ch 6KX523001-, Alu, -ABS, RHD
1.4 Eng.AKK/ AUD (44kW)	95-01		R		**CF121**		Ø 19,05	Alu, +ABS
	95-01		R		**CF000**		Ø 17,46	-ABS
	95-01		R		**CF239**		Ø 17,46	Alu, -ABS
	95-01				**PF310**	Ate	Ø 22,20	+ABS
	95-01				**PF041**	Ate	Ø 20,64	-ABS
	-99				**PF583**	Bch	Ø 22,20	Ch 6KX523001-, Alu, -ABS, RHD
1.4 Eng.ANW (44kW)	95-01		R		**CF121**		Ø 19,05	Alu, +ABS
	95-01		R		**CF000**		Ø 17,46	-ABS
	95-01		R		**CF239**		Ø 17,46	Alu, -ABS
	95-01				**PF310**	Ate	Ø 22,20	+ABS
	95-01				**PF041**	Ate	Ø 20,64	-ABS
	95-01				**PF549**	Ate	Ø 22,20	Alu
	-99				**PF583**	Bch	Ø 22,20	Ch 6KX523001-, Alu, -ABS, RHD
1.4 16v Eng.AHW/ AKQ/ APE/ AUA (55kW)	99-01		R		**CF121**		Ø 19,05	Alu, +ABS
	99-01		R		**CF000**		Ø 17,46	-ABS
	99-01		R		**CF239**		Ø 17,46	Alu, -ABS
	99-01				**PF310**	Ate	Ø 22,20	+ABS
	99-01				**PF549**	Ate	Ø 22,20	Alu
	-99				**PF583**	Bch	Ø 22,20	Ch 6KX523001-, Alu, -ABS, RHD
1.6 Eng.1F (53-55kW)	95-01		R		**CF121**		Ø 19,05	Alu, +ABS
	95-01		R		**CF000**		Ø 17,46	-ABS
	95-01		R		**CF239**		Ø 17,46	Alu, -ABS
	95-01				**PF310**	Ate	Ø 22,20	+ABS
					PF041	Ate	Ø 20,64	Ch 6KZV022629-, -ABS
	-99				**PF583**	Bch	Ø 22,20	Ch 6KX523001-, Alu, -ABS, RHD
					PF039	Luc	Ø 22,20	Ch -6KZV022628, -ABS
1.6 Eng.AEE/ ALM (55kW)	95-01		R		**CF121**		Ø 19,05	Alu, +ABS
	95-01		R		**CF000**		Ø 17,46	-ABS
	95-01		R		**CF239**		Ø 17,46	Alu, -ABS
	95-01				**PF310**	Ate	Ø 22,20	+ABS
					PF041	Ate	Ø 20,64	Ch 6KZV022629-, -ABS
	95-01				**PF549**	Ate	Ø 22,20	Alu
	-99				**PF583**	Bch	Ø 22,20	Ch 6KX523001-, Alu, -ABS, RHD
					PF039	Luc	Ø 22,20	Ch -6KZV022628, -ABS
1.6 Eng.AEH/ AKL/ APF/ AUR (74kW)	6/97-01		R		**CF107**		Ø 19,05	
	95-01		R		**CF121**		Ø 19,05	Alu
	95-01				**PF310**	Ate	Ø 22,20	+ABS
	95-01				**PF549**	Ate	Ø 22,20	Alu
	-99				**PF583**	Bch	Ø 22,20	Ch 6KX523001-, Alu, -ABS, RHD
	6/97-01				**PF039**	Luc	Ø 22,20	-ABS
	6/97-01				**PF248**	Luc	Ø 22,20	Alu, -ABS
	95-01				**CZ081**	Fte	Ø 23,81	Alu
	95-01				**CZ026**		Ø 23,81	Pla
	99-01				**PZ099**	Sachs	Ø 15,87	

		Spare Parts	F/R	L/R	FRITECH ref.		DIMENSIONS mm.	NOTE
1.6 Eng.AFT (74kW)	6/97-99		R		**CF107**		Ø 19,05	
	95-99		R		**CF121**		Ø 19,05	Alu
	95-99				**PF310**	Ate	Ø 22,20	+ABS
	95-99				**PF549**	Ate	Ø 22,20	Alu
	-99				**PF583**	Bch	Ø 22,20	Ch 6KX523001-, Alu, -ABS, RHD
	6/97-99				**PF039**	Luc	Ø 22,20	-ABS
	6/97-99				**PF248**	Luc	Ø 22,20	Alu, -ABS
	95-99				**CZ081**	Fte	Ø 23,81	Alu
	95-99				**CZ026**		Ø 23,81	Pla
1.7 SDi Eng.AKW (42kW)	97-01		R		**CF121**		Ø 19,05	Alu
	97-01				**PF310**	Ate	Ø 22,20	+ABS
	97-01				**PF041**	Ate	Ø 20,64	-ABS
	97-01				**PF549**	Ate	Ø 22,20	Alu
	-99				**PF583**	Bch	Ø 22,20	Ch 6KX523001-, Alu, -ABS, RHD
	97-				**PZ150**	Fte	Ø 15,87	
1.8 Eng.ADD/ ADZ (66kW)	97-01		R		**CF121**		Ø 19,05	Alu
	-99				**PF583**	Bch	Ø 22,20	Ch 6KX523001-, Alu, -ABS, RHD
1.9 D Eng.1Y/ AEY (47-50kW)	95-01		R		**CF121**		Ø 19,05	Alu
	95-01				**PF310**	Ate	Ø 22,20	+ABS
	95-01				**PF041**	Ate	Ø 20,64	-ABS
	95-01				**PF549**	Ate	Ø 22,20	Alu
	-99				**PF583**	Bch	Ø 22,20	Ch 6KX523001-, Alu, -ABS, RHD
	95-				**PZ150**	Fte	Ø 15,87	
1.9 SDi Eng.AGP/ AQM (50kW)	99-01		R		**CF121**		Ø 19,05	Alu
	99-01				**PF310**	Ate	Ø 22,20	+ABS
	99-01				**PF041**	Ate	Ø 20,64	-ABS
	99-01				**PF549**	Ate	Ø 22,20	Alu
	-99				**PF583**	Bch	Ø 22,20	Ch 6KX523001-, Alu, -ABS, RHD
	99-01				**CZ081**	Fte	Ø 23,81	Alu
	99-01				**CZ026**		Ø 23,81	Pla
	99-01				**PZ099**	Sachs	Ø 15,87	
1.9 TDi Eng.AFN/ ASV (81kW)	98-01				**PF310**	Ate	Ø 22,20	+ABS
	98-01				**PF549**	Ate	Ø 22,20	Alu
	-99				**PF583**	Bch	Ø 22,20	Ch 6KX523001-, Alu, -ABS, RHD
	98-01				**PF039**	Luc	Ø 22,20	-ABS
	98-01				**PF248**	Luc	Ø 22,20	Alu, -ABS
	10/99-				**CZ076**		Ø 19,05	
	98-01				**PZ061**	Ate	Ø 19,05	
	99-01				**PZ099**	Sachs	Ø 15,87	
1.9 TDi Eng.AGR/ AHU/ ALH/ ALE (66kW)	96-01		R		**CF121**		Ø 19,05	Alu
	96-01				**PF310**	Ate	Ø 22,20	+ABS
	96-01				**PF549**	Ate	Ø 22,20	Alu
	-99				**PF583**	Bch	Ø 22,20	Ch 6KX523001-, Alu, -ABS, RHD
	96-01				**PF039**	Luc	Ø 22,20	-ABS
	96-01				**PF248**	Luc	Ø 22,20	Alu, -ABS
	10/99-				**CZ076**		Ø 19,05	
	96-01				**PZ061**	Ate	Ø 19,05	
	96-01				**PZ099**	Sachs	Ø 15,87	
2.0 Eng.ADC (85kW)	99-		R		**CF121**		Ø 19,05	Alu
	99-01				**PF039**	Luc	Ø 22,20	-ABS
Polo IV (6KV5) Variant 5/97-9/01								
1.4 Eng.AEX/ AKV/ ANX/ APQ (44kW)	97-01		R		**CF121**		Ø 19,05	Alu
	97-01				**PF310**	Ate	Ø 22,20	+ABS
	97-01				**PF549**	Ate	Ø 22,20	Alu, +ABS
					PF583	Bch	Ø 22,20	Ch 6KX523001-, Alu, -ABS, RHD
	97-01				**PF039**	Luc	Ø 22,20	-ABS
	97-01				**PF248**	Luc	Ø 22,20	Alu, -ABS
1.4 Eng.AKK/ AUD (44kW)	97-01		R		**CF121**		Ø 19,05	Alu
	97-01				**PF310**	Ate	Ø 22,20	+ABS
	97-01				**PF549**	Ate	Ø 22,20	Alu, +ABS
					PF583	Bch	Ø 22,20	Ch 6KX523001-, Alu, -ABS, RHD
	97-01				**PF039**	Luc	Ø 22,20	-ABS
	97-01				**PF248**	Luc	Ø 22,20	Alu, -ABS

VOLKSWAGEN

		Spare Parts	F/R	L/R	FRITECH ref.		DIMENSIONS mm.	NOTE
1.4 Eng.AKP (40kW)	99-01		R		**CF121**		Ø 19,05	Alu
	99-01				**PF310**	Ate	Ø 22,20	+ABS
	99-01				**PF039**	Luc	Ø 22,20	-ABS
	99-01				**PF248**	Luc	Ø 22,20	Alu, -ABS
1.4 Eng.ANW (44kW)	97-01		R		**CF121**		Ø 19,05	Alu
	97-01				**PF310**	Ate	Ø 22,20	+ABS
	97-01				**PF549**	Ate	Ø 22,20	Alu, +ABS
					PF583	Bch	Ø 22,20	Ch 6KX523001-, Alu, -ABS, RHD
	97-01				**PF039**	Luc	Ø 22,20	-ABS
	97-01				**PF248**	Luc	Ø 22,20	Alu, -ABS
1.4 16v Eng.AHW/ AKQ/ APE/ AUA (55kW)	99-01		R		**CF121**		Ø 19,05	Alu, -ABS
	99-01				**PF310**	Ate	Ø 22,20	+ABS
	99-01				**PF549**	Ate	Ø 22,20	Alu, +ABS
					PF583	Bch	Ø 22,20	Ch 6KX523001-, Alu, -ABS, RHD
1.6 Eng.AEE/ ALM (55kW)	97-01		R		**CF121**		Ø 19,05	Alu
	97-01				**PF310**	Ate	Ø 22,20	+ABS
	97-01				**PF549**	Ate	Ø 22,20	Alu, +ABS
					PF583	Bch	Ø 22,20	Ch 6KX523001-, Alu, -ABS, RHD
	97-01				**PF039**	Luc	Ø 22,20	-ABS
	97-01				**PF248**	Luc	Ø 22,20	Alu, -ABS
1.6 Eng.AEH/ AKL/ APF/ AUR (74kW)	99-01		R		**CF121**		Ø 19,05	Alu
	99-01				**PF310**	Ate	Ø 22,20	+ABS
	99-01				**PF549**	Ate	Ø 22,20	Alu, +ABS
	99-01				**PF039**	Luc	Ø 22,20	-ABS
	99-01				**PF248**	Luc	Ø 22,20	Alu, -ABS
	99-01				**CZ081**	Fte	Ø 23,81	Alu
	99-01				**CZ026**		Ø 23,81	Pla
1.7 SDi Eng.AKU/ AKW (44kW)	99-01		R		**CF121**		Ø 19,05	Alu
	99-01				**PF310**	Ate	Ø 22,20	+ABS
	99-01				**PF549**	Ate	Ø 22,20	Alu, +ABS
					PF583	Bch	Ø 22,20	Ch 6KX523001-, Alu, -ABS, RHD
	99-01				**PF039**	Luc	Ø 22,20	-ABS
	99-01				**PF248**	Luc	Ø 22,20	Alu, -ABS
	99-				**PZ150**	Fte	Ø 15,87	
1.9 SDi Eng.AEY (47kW)	99-01		R		**CF121**		Ø 19,05	Alu
	99-01				**PF549**	Ate	Ø 22,20	Alu, +ABS
					PF583	Bch	Ø 22,20	Ch 6KX523001-, Alu, -ABS, RHD
	99-01				**PF039**	Luc	Ø 22,20	-ABS
	99-01				**PF248**	Luc	Ø 22,20	Alu, -ABS
	99-				**PZ150**	Fte	Ø 15,87	
1.9 SDi Eng.AGD/ ASX (47kW)	99-		R		**CF121**		Ø 19,05	Alu
	99-				**PF310**	Ate	Ø 22,20	+ABS
	99-01				**PF549**	Ate	Ø 22,20	Alu, +ABS
					PF583	Bch	Ø 22,20	Ch 6KX523001-, Alu, -ABS, RHD
1.9 SDi Eng.AGP/ AQM (50kW)	99-		R		**CF121**		Ø 19,05	Alu
	99-				**PF310**	Ate	Ø 22,20	+ABS
	99-01				**PF549**	Ate	Ø 22,20	Alu, +ABS
					PF583	Bch	Ø 22,20	Ch 6KX523001-, Alu, -ABS, RHD
	99-01				**CZ081**	Fte	Ø 23,81	Alu
	99-01				**CZ026**		Ø 23,81	Pla
1.9 TDi Eng.AFN/ ASV (81kW)	98-01				**PF310**	Ate	Ø 22,20	+ABS
	98-01				**PF549**	Ate	Ø 22,20	Alu, +ABS
					PF583	Bch	Ø 22,20	Ch 6KX523001-, Alu, -ABS, RHD
	10/99-				**CZ076**		Ø 19,05	
1.9 TDi Eng.AGR/ AHU/ ALH/ ALE (66kW)	97-01		R		**CF121**		Ø 19,05	Alu
	97-01				**PF310**	Ate	Ø 22,20	+ABS
	97-01				**PF549**	Ate	Ø 22,20	Alu, +ABS
					PF583	Bch	Ø 22,20	Ch 6KX523001-, Alu, -ABS, RHD
	97-01				**PF039**	Luc	Ø 22,20	-ABS
	97-01				**PF248**	Luc	Ø 22,20	Alu, -ABS
	10/99-				**CZ076**		Ø 19,05	
Polo IV (6N2) 10/99-9/01								
1.0 Eng.ALD/ ALL/ ANV/ AUC (37kW)	99-01		R		**CF000**		Ø 17,46	
	99-01		R		**CF239**		Ø 17,46	Alu

		Spare Parts	F/R	L/R	FRITECH ref.		DIMENSIONS mm.	NOTE
1.0 Eng.ALD/ ALL/ ANV/ AUC (37kW)	99-01				**PF494**	Ate	Ø 22,20	Alu, +ABS, LHD
	99-01				**PF041**	Ate	Ø 20,64	-ABS
	99-01				**PF231**	Ate	Ø 20,64	Alu, -ABS
	99-				**CZ086**	Fte	Ø 19,05	Pla
	99-				**CZ098**	Fte	Ø 19,05	Alu
	99-				**PZ148**	Sachs	Ø 15,87	
1.4 Eng.AEX/ AKV/ ANX/ APQ (44kW)	99-01		R		**CF000**		Ø 17,46	
	99-01		R		**CF239**		Ø 17,46	Alu
					PF494	Ate	Ø 22,20	Ch 6NZV000001-, Alu, +ABS, LHD
	10/99-9/01				**PF310**	Ate	Ø 22,20	+ABS
	99-01				**PF041**	Ate	Ø 20,64	-ABS
	99-01				**PF231**	Ate	Ø 20,64	Alu, -ABS
1.4 Eng.AKK/ AUD (44kW)	99-01		R		**CF000**		Ø 17,46	
	99-01		R		**CF239**		Ø 17,46	Alu
					PF494	Ate	Ø 22,20	Ch 6NZV000001-, Alu, +ABS, LHD
	10/99-9/01				**PF310**	Ate	Ø 22,20	+ABS
	99-01				**PF041**	Ate	Ø 20,64	-ABS
	99-01				**PF231**	Ate	Ø 20,64	Alu, -ABS
1.4 Eng.AKP (40kW)	99-01		R		**CF000**		Ø 17,46	
	99-01		R		**CF239**		Ø 17,46	Alu
	10/99-				**PF310**	Ate	Ø 22,20	Ch -6NZT250000, +ABS
	-01				**PF494**	Ate	Ø 22,20	Ch 6NZV000001-, Alu, +ABS, LHD
	99-01				**PF041**	Ate	Ø 20,64	-ABS
	99-01				**PF231**	Ate	Ø 20,64	Alu, -ABS
1.4 Eng.ANW (44kW)	99-01		R		**CF000**		Ø 17,46	
	99-01		R		**CF239**		Ø 17,46	Alu
					PF494	Ate	Ø 22,20	Ch 6NZV000001-, Alu, +ABS, LHD
	10/99-9/01				**PF310**	Ate	Ø 22,20	+ABS
	99-01				**PF041**	Ate	Ø 20,64	-ABS
	99-01				**PF231**	Ate	Ø 20,64	Alu, -ABS
1.4 16v Eng.AFK/ AUB (74kW)	99-01		R		**CF000**		Ø 17,46	Exc. Germany
	99-01		R		**CF239**		Ø 17,46	Alu, Exc. Germany
					PF548	Ate	Ø 23,81	Ch 6NZV000001-, Alu, +ABS, -ESP
	10/99-9/01				**PF310**	Ate	Ø 22,20	-ABS
	99-				**CZ086**	Fte	Ø 19,05	Pla
	99-				**CZ098**	Fte	Ø 19,05	Alu
	99-				**PZ148**	Sachs	Ø 15,87	
1.4 16v Eng.AHW/ AKQ/ APE/ AUA (55kW)	99-01		R		**CF121**		Ø 19,05	Alu, -ABS
	99-01				**PF041**	Ate	Ø 20,64	-ABS
	99-01				**PF231**	Ate	Ø 20,64	Alu, -ABS
	99-				**CZ086**	Fte	Ø 19,05	Pla
	99-				**CZ098**	Fte	Ø 19,05	Alu
	99-				**PZ148**	Sachs	Ø 15,87	
1.4 TDi Eng.AMF (55kW)	99-01		R		**CF121**		Ø 19,05	Alu, -ABS
	10/99-9/01				**PF310**	Ate	Ø 22,20	+ABS
	99-				**CZ086**	Fte	Ø 19,05	Pla
	99-				**CZ098**	Fte	Ø 19,05	Alu
	10/99-9/01				**CZ076**		Ø 19,05	
	99-01				**PZ148**	Sachs	Ø 15,87	
1.6 16v GTI Eng.ARC/ AVY (92kW)	99-01				**PF548**	Ate	Ø 23,81	Alu, +ABS, -ESP
	99-				**CZ086**	Fte	Ø 19,05	Pla
	99-				**CZ098**	Fte	Ø 19,05	Alu
	99-				**PZ148**	Sachs	Ø 15,87	
1.7 SDi Eng.AKU/ AKW (44kW)	99-01		R		**CF239**		Ø 17,46	Alu, -ABS
	99-01		R		**CF000**		Ø 17,46	
	99-01				**PF494**	Ate	Ø 22,20	Alu, +ABS, LHD
	99-01				**PF041**	Ate	Ø 20,64	-ABS
	99-01				**PF231**	Ate	Ø 20,64	Alu, -ABS
1.9 D Eng.AEF (47kW)	99-01		R		**CF000**		Ø 17,46	
	99-01		R		**CF239**		Ø 17,46	Alu
	10/99-				**PF310**	Ate	Ø 22,20	Ch -6NZT250000, +ABS
	-01				**PF494**	Ate	Ø 22,20	Ch 6NZV000001-, Alu, +ABS, LHD
	99-01				**PF041**	Ate	Ø 20,64	-ABS
	99-01				**PF231**	Ate	Ø 20,64	Alu, -ABS

VOLKSWAGEN

		Spare Parts	F/R	L/R	FRITECH ref.		DIMENSIONS mm.	NOTE
1.9 SDi Eng.AEY/ AGD/ ASX (47kW)	99-01		R		**CF000**		Ø 17,46	
	99-01		R		**CF239**		Ø 17,46	Alu
					PF494	Ate	Ø 22,20	Ch 6NZV000001-, Alu, +ABS, LHD
	10/99-9/01				**PF310**	Ate	Ø 22,20	+ABS
	99-				**CZ086**	Fte	Ø 19,05	Pla
	99-				**CZ098**	Fte	Ø 19,05	Alu
	99-				**PZ148**	Sachs	Ø 15,87	
1.9 SDi Eng.AGP (50kW)	99-				**CZ086**	Fte	Ø 19,05	Pla
	99-				**CZ098**	Fte	Ø 19,05	Alu
	99-				**PZ148**	Sachs	Ø 15,87	
Polo V (9N) 10/01-6/09								
1.2 Eng.AWY/ BHD/ BMD (40kW)	1/02-		R		**CF239**		Ø 17,46	Alu, -ABS
	02-05				**PF887**	Bch	Ø 20,64	Alu, Cod. ID PR 1AC, +ABS
	02-09				**PF993**	Bch	Ø 20,64	Ch 9N5500001-, Alu, -ABS
	1/02-				**PF661**	Fte	Ø 19,05	Alu, +ABS, -PS
	02-09				**PF973**	Fte	Ø 20,64	Alu, +ABS, +PS
	1/02-				**PF463**	Fte	Ø 20,64	Alu, +ABS
	1/02-				**PF329**	Fte	Ø 20,64	Ch -9N5180000, Alu, -ABS, +PS
	1/02-				**CZ077**	Fte	Ø 19,05	Pla
	1/02-				**CZ099**	Fte	Ø 19,05	
	1/02-				**PZ077**	Sachs	Ø 15,87	Alu
1.2 Eng.BBM (44kW)	07-		R		**CF239**		Ø 17,46	Alu, +ABS
	07-09				**PF973**	Fte	Ø 20,64	Alu, +ABS, +PS
1.2 12v Eng.AZQ/ BME (47kW)	10/01-		R		**CF239**		Ø 17,46	Alu, -ABS
	01-05				**PF887**	Bch	Ø 20,64	Alu, Cod. ID PR 1AC, +ABS
	01-				**PF993**	Bch	Ø 20,64	Ch 9N5500001-, Alu, -ABS
	01-				**PF661**	Fte	Ø 19,05	Alu, +ABS, -PS
	01-				**PF463**	Fte	Ø 20,64	Alu, +ABS
	01-09				**PF973**	Fte	Ø 20,64	Alu, +ABS
	01-				**PF329**	Fte	Ø 20,64	Ch -9N5180000, Alu, -ABS, +PS
	01-				**CZ077**	Fte	Ø 19,05	Pla
	01-				**CZ099**	Fte	Ø 19,05	
	01-				**PZ077**	Sachs	Ø 15,87	Alu
1.2 12v Eng.BZG (51kW)	07-		R		**CF239**		Ø 17,46	Alu, +ABS
	01-09				**PF973**	Fte	Ø 20,64	Alu, +ABS
1.4 16v Eng.AHW/ AKQ/ APE/ AUA/ BBY/ BKY	10/01-		R		**CF239**		Ø 17,46	Alu, -ABS
(55kW)	01-05				**PF887**	Bch	Ø 20,64	Alu, Cod. ID PR 1AC, +ABS
	10/01-				**PF993**	Bch	Ø 20,64	Ch 9N5500001-, Alu, -ABS
	10/01-				**PF661**	Fte	Ø 19,05	Alu, +ABS, -PS
	01-09				**PF973**	Fte	Ø 20,64	Alu, +ABS
	10/01-				**PF463**	Fte	Ø 20,64	Alu, +ABS
	10/01-				**PF329**	Fte	Ø 20,64	Ch -9N5180000, Alu, -ABS, +PS
	10/01-				**CZ077**	Fte	Ø 19,05	Pla
	10/01-				**CZ099**	Fte	Ø 19,05	
	10/01-				**PZ077**	Sachs	Ø 15,87	Alu
1.4 16v Eng.AUB/ BBZ (74kW)	01-05				**PF887**	Bch	Ø 20,64	Alu, Cod. ID PR 1AC, +ABS
	01-				**PF993**	Bch	Ø 20,64	Ch 9N5500001-, Alu, -ABS
	01-				**PF661**	Fte	Ø 19,05	Alu, +ABS, -PS
	01-				**PF463**	Fte	Ø 20,64	Alu, +ABS
	01-09				**PF973**	Fte	Ø 20,64	Alu, +ABS
	01-				**PF329**	Fte	Ø 20,64	Ch -9N5180000, Alu, -ABS, +PS
	01-				**CZ077**	Fte	Ø 19,05	Pla
	01-				**CZ099**	Fte	Ø 19,05	
	01-				**PZ077**	Sachs	Ø 15,87	Alu
1.4 16v Eng.BUD (59kW)	06-				**PF993**	Bch	Ø 20,64	Ch 9N5500001-, Alu, -ABS
	06-				**PF661**	Fte	Ø 19,05	Alu, +ABS, -PS, -ESP
	01-09				**PF973**	Fte	Ø 20,64	Alu, +ABS
	06-				**PF329**	Fte	Ø 20,64	Ch -9N5180000, Alu, -ABS, +PS
1.4 FSI Eng.AXU (63kW)	5/02-		R		**CF239**		Ø 17,46	Alu, +ABS
	02-05				**PF887**	Bch	Ø 20,64	Alu, Cod. ID PR 1AC, +ABS
	5/02-				**PF993**	Bch	Ø 20,64	Ch 9N5500001-, Alu, -ABS
	5/02-				**PF661**	Fte	Ø 19,05	Alu, +ABS, -PS
	01-09				**PF973**	Fte	Ø 20,64	Alu, +ABS
	5/02-				**PF463**	Fte	Ø 20,64	Alu, +ABS

		Spare Parts	F/R	L/R	FRITECH ref.		DIMENSIONS mm.	NOTE
1.4 FSI Eng.AXU (63kW)	5/02-				**PF329**	Fte	Ø 20,64	Ch -9N5180000, Alu, -ABS, +PS
	5/02-				**CZ077**	Fte	Ø 19,05	Pla
	5/02-				**CZ099**	Fte	Ø 19,05	
	5/02-				**PZ077**	Sachs	Ø 15,87	Alu
1.4 TDi Eng.AMF/ BAY (55kW)	01-		R		**CF239**		Ø 17,46	Alu, -ABS
	01-05				**PF887**	Bch	Ø 20,64	Alu, Cod. ID PR 1AC, +ABS
	01-				**PF993**	Bch	Ø 20,64	Ch 9N5500001-, Alu, -ABS
	01-				**PF661**	Fte	Ø 19,05	Alu, +ABS, -PS
	01-				**PF463**	Fte	Ø 20,64	Alu, +ABS
	01-09				**PF973**	Fte	Ø 20,64	Alu, +ABS
	01-				**PF329**	Fte	Ø 20,64	Ch -9N5180000, Alu, -ABS, +PS
	01-				**CZ086**	Fte	Ø 19,05	Pla
	01-				**CZ098**	Fte	Ø 19,05	Alu
	01-				**PZ077**	Sachs	Ø 15,87	Alu
1.4 TDi Eng.BMS/ BNV (59kW)	05-		R		**CF239**		Ø 17,46	Alu, -ABS
	05-				**PF993**	Bch	Ø 20,64	Ch 9N5500001-, Alu, -ABS
	05-				**PF661**	Fte	Ø 19,05	Alu, +ABS, -PS
	01-09				**PF973**	Fte	Ø 20,64	Alu, +ABS
	05-				**PF463**	Fte	Ø 20,64	Alu, +ABS
	05-				**PF329**	Fte	Ø 20,64	Ch -9N5180000, Alu, -ABS, +PS
	05-				**CZ086**	Fte	Ø 19,05	Pla
	05-				**CZ098**	Fte	Ø 19,05	Alu
1.4 TDi Eng.BNM/ BWB (51kW)	05-09		R		**CF239**		Ø 17,46	Alu, -ABS
	05-				**PF993**	Bch	Ø 20,64	Ch 9N5500001-, Alu, -ABS
	05-				**PF661**	Fte	Ø 19,05	Alu, +ABS, -PS
	01-09				**PF973**	Fte	Ø 20,64	Alu, +ABS
	05-				**PF463**	Fte	Ø 20,64	Alu, +ABS
	05-				**PF329**	Fte	Ø 20,64	Ch -9N5180000, Alu, -ABS, +PS
	05-				**CZ086**	Fte	Ø 19,05	Pla
	05-				**CZ098**	Fte	Ø 19,05	Alu
1.6 Eng.BTS (77kW)	06-		R		**CF239**		Ø 17,46	Alu, +ABS
	06-				**PF661**	Fte	Ø 19,05	Alu, +ABS, -PS, -ESP
	01-09				**PF973**	Fte	Ø 20,64	Alu, +ABS
1.8 GTI Eng.BJX (110kW)	05-				**PF993**	Bch	Ø 20,64	Ch 9N5500001-, Alu, -ABS
	05-				**PF661**	Fte	Ø 19,05	Alu, +ABS, -PS
	01-09				**PF973**	Fte	Ø 20,64	Alu, +ABS
	05-				**PF463**	Fte	Ø 20,64	Alu, +ABS
	05-				**PF329**	Fte	Ø 20,64	Ch -9N5180000, Alu, -ABS, +PS
	05-				**CZ086**	Fte	Ø 19,05	Pla
	05-				**CZ098**	Fte	Ø 19,05	Alu
1.8 GTi Cup Eng.BBU (132kW)	01-09				**PF973**	Fte	Ø 20,64	Alu, +ABS
	06-				**CZ086**	Fte	Ø 19,05	Pla
	06-				**CZ098**	Fte	Ø 19,05	Alu
1.9 SDi Eng.ASY (47kW)	01-		R		**CF239**		Ø 17,46	Alu
	01-05				**PF887**	Bch	Ø 20,64	Alu, Cod. ID PR 1AC, +ABS
	01-				**PF993**	Bch	Ø 20,64	Ch 9N5500001-, Alu, -ABS
	01-				**PF661**	Fte	Ø 19,05	Alu, +ABS, -PS
	01-				**PF463**	Fte	Ø 20,64	Alu, +ABS
	01-09				**PF973**	Fte	Ø 20,64	Alu, +ABS
	01-				**PF329**	Fte	Ø 20,64	Ch -9N5180000, Alu, -ABS, +PS
	01-				**CZ077**	Fte	Ø 19,05	Pla
	01-				**CZ099**	Fte	Ø 19,05	
	01-				**PZ077**	Sachs	Ø 15,87	Alu
1.9 TDi Eng.ASZ/ BLT (96kW)	03-		R		**CF239**		Ø 17,46	Alu, -ABS
	03-05				**PF887**	Bch	Ø 20,64	Alu, Cod. ID PR 1AC, +ABS
	03-				**PF993**	Bch	Ø 20,64	Ch 9N5500001-, Alu, -ABS
	03-				**PF661**	Fte	Ø 19,05	Alu, +ABS, -PS
	01-09				**PF973**	Fte	Ø 20,64	Alu, +ABS
	03-				**PF463**	Fte	Ø 20,64	Alu, +ABS
	03-				**PF329**	Fte	Ø 20,64	Ch -9N5180000, Alu, -ABS, +PS
	03-				**PZ077**	Sachs	Ø 15,87	Alu
1.9 TDi Eng.ATD/ AXR (74kW)	01-		R		**CF239**		Ø 17,46	Alu, -ABS
	01-05				**PF887**	Bch	Ø 20,64	Alu, Cod. ID PR 1AC, +ABS
	01-				**PF993**	Bch	Ø 20,64	Ch 9N5500001-, Alu, -ABS

VOLKSWAGEN

		Spare Parts	F/R	L/R	FRITECH ref.		DIMENSIONS mm.	NOTE
1.9 TDi Eng.ATD/ AXR (74kW)	01-				**PF661**	Fte	Ø 19,05	Alu, +ABS, -PS
	01-				**PF463**	Fte	Ø 20,64	Alu, +ABS
	01-09				**PF973**	Fte	Ø 20,64	Alu, +ABS
	01-				**PF329**	Fte	Ø 20,64	Ch -9N5180000, Alu, -ABS, +PS
	01-				**CZ086**	Fte	Ø 19,05	Pla
	01-				**CZ098**	Fte	Ø 19,05	Alu
	01-				**PZ077**	Sachs	Ø 15,87	Alu
Polo VI (6R/C) 7/09-								
1.0 Eng.CHYA (44kW)	14-		R		**CF121**		Ø 19,05	Alu
1.0 Eng.CHYB (55kW)	14-		R		**CF121**		Ø 19,05	Alu
1.2 Eng.CGPA (51kW)	09-		R		**CF121**	Fte	Ø 19,05	Alu
	09-				**CZ086**	Fte	Ø 19,05	Pla
	09-				**CZ098**	Fte	Ø 19,05	Alu
1.2 Eng.CHFA/ CGPB (44kW)	09-		R		**CF121**	Fte	Ø 19,05	Alu
	09-				**CZ086**	Fte	Ø 19,05	Pla
	09-				**CZ098**	Fte	Ø 19,05	Alu
1.2 TDi Eng.CFWA (55kW)	09-		R		**CF121**	Fte	Ø 19,05	Alu
	09-				**CZ086**	Fte	Ø 19,05	Pla
	09-				**CZ098**	Fte	Ø 19,05	Alu
1.2 TSi Eng.CBZB (77kW)	09-		R		**CF121**	Fte	Ø 19,05	Alu
	10-				**CZ086**	Fte	Ø 19,05	Pla
	10-				**CZ098**	Fte	Ø 19,05	Alu
1.2 TSi Eng.CBZC (66kW)	11-		R		**CF121**		Ø 19,05	Alu
	11-				**CZ086**	Fte	Ø 19,05	Pla
	11-				**CZ098**	Fte	Ø 19,05	Alu
1.2 TSi Eng.CJZC (66kW)	14-		R		**CF121**		Ø 19,05	Alu
1.2 TSi Eng.CJZD (81kW)	14-		R		**CF121**		Ø 19,05	Alu
1.4 Eng.CGGB/CDPA/CLPA (63kW)	09-		R		**CF121**	Fte	Ø 19,05	Alu
1.4 BiFuel Eng.CMAA (60kW)	10-		R		**CF121**		Ø 19,05	Alu
	10-				**CZ086**	Fte	Ø 19,05	Pla
	10-				**CZ098**	Fte	Ø 19,05	Alu
1.4 GTI Eng.CAVE/ CTHE (132kW)	10-		R		**CF121**		Ø 19,05	Alu
1.4 TDi Eng.CUSA (55kW)	14-		R		**CF121**		Ø 19,05	Alu
1.4 TDi Eng.CUSB (66kW)	14-		R		**CF121**		Ø 19,05	Alu
1.4 TDi Eng.CYZA/CUTA (77kW)	14-		R		**CF121**		Ø 19,05	Alu
1.4 TSi Eng.CAVB (125kW)	10-		R		**CF121**	Fte	Ø 19,05	Alu
1.4 TSI Eng.CPTA (103kW)	12-		R		**CF121**		Ø 19,05	Alu
1.4 TSi Eng.CZEA (110kW)	14-		R		**CF121**		Ø 19,05	Alu
1.6 Eng.CWVA (81kW)	14-		R		**CF121**		Ø 19,05	Alu
1.6 BiFuel Eng.CNKA (60kW)	11-		R		**CF121**		Ø 19,05	Alu
	11-				**CZ086**	Fte	Ø 19,05	Pla
	11-				**CZ098**	Fte	Ø 19,05	Alu
1.6 TDi Eng.CAYA (55kW)	09-		R		**CF121**	Fte	Ø 19,05	Alu
	09-				**CZ086**	Fte	Ø 19,05	Pla
	09-				**CZ098**	Fte	Ø 19,05	Alu
1.6 TDi Eng.CAYB (66kW)	09-		R		**CF121**	Fte	Ø 19,05	Alu
	09-				**CZ086**	Fte	Ø 19,05	Pla
	09-				**CZ098**	Fte	Ø 19,05	Alu
1.6 TDi Eng.CAYC/CLNA (77kW)	09-		R		**CF121**	Fte	Ø 19,05	Alu
	09-				**CZ086**	Fte	Ø 19,05	Pla
	09-				**CZ098**	Fte	Ø 19,05	Alu
1.8 GTi Eng.DAJB (141kW)	14-		R		**CF121**		Ø 19,05	Alu
Quantum I 1/85-7/90								
All models	86-88		R		**CF000**		Ø 17,46	
Rabbit 1/74-1/76								
All models	74-76		R		**CF001**		Ø 14,29	M/T
	74-76		R		**CF000**		Ø 17,46	A/T
	74-76				**PF059**		Ø 20,64	+Servo
Santana I (32, 33), Variant 5/73-7/80								
1.3 Eng.FY (40kW)	5/73-80		R		**CF001**		Ø 14,29	
	5/73-80				**PF058**		Ø 20,64	+Servo
	5/73-80				**PF059**		Ø 20,64	+Servo
1.3 Eng.ZA (40kW)	5/73-80		R		**CF001**		Ø 14,29	
	5/73-80				**PF058**		Ø 20,64	+Servo

		Spare Parts	F/R	L/R	FRITECH ref.		DIMENSIONS mm.	NOTE
1.3 Eng.ZA (40kW)	5/73-80				**PF059**		Ø 20,64	+Servo
1.3 Eng.ZF (44kW)	73-78		R		**CF001**		Ø 14,29	
	73-78				**PF058**		Ø 20,64	+Servo
	73-78				**PF059**		Ø 20,64	+Servo
1.5 Eng.YJ/ ZB (55kW)	73-75		R		**CF001**		Ø 14,29	Incl. Sweden, M/T
	73-75		R		**CF000**		Ø 17,46	A/T
	73-75				**PF058**		Ø 20,64	+Servo, M/T
	73-75				**PF059**		Ø 20,64	Incl. Sweden, +Servo, M/T
	73-75				**PF060**		Ø 20,64	A/T
	73-75				**PF293**		Ø 20,64	A/T
1.5 Eng.ZC (63kW)	73-75		R		**CF001**		Ø 14,29	Incl. Sweden, M/T
	73-75		R		**CF000**		Ø 17,46	A/T
	73-75				**PF058**		Ø 20,64	+Servo, M/T
	73-75				**PF059**		Ø 20,64	Incl. Sweden, +Servo, M/T
	73-75				**PF060**		Ø 20,64	A/T
	73-75				**PF293**		Ø 20,64	A/T
1.5 D Eng.CK (37kW)	8/77-7/80		R		**CF001**		Ø 14,29	M/T
	8/77-7/80		R		**CF000**		Ø 17,46	A/T
	8/77-7/80				**PF060**		Ø 20,64	M/T+A/T
	8/77-7/80				**PF293**		Ø 20,64	A/T
1.6 Eng.YP (63kW)	75-80		R		**CF001**		Ø 14,29	M/T
	75-80		R		**CF000**		Ø 17,46	A/T
	75-80				**PF058**		Ø 20,64	M/T
	75-80				**PF059**		Ø 20,64	M/T
	75-80				**PF060**		Ø 20,64	M/T+A/T
	75-80				**PF293**		Ø 20,64	A/T
1.6 (Exc. SW) Eng.FS (53kW)	75-80		R		**CF001**		Ø 14,29	M/T
	75-80		R		**CF000**		Ø 17,46	A/T
	75-80				**PF058**		Ø 20,64	M/T
	75-80				**PF059**		Ø 20,64	M/T
	75-80				**PF060**		Ø 20,64	M/T+A/T
	75-80				**PF293**		Ø 20,64	A/T
1.6 D SW Eng.CR (40kW)	79-80		R		**CF001**		Ø 14,29	M/T
	79-80		R		**CF000**		Ø 17,46	A/T
	79-80				**PF058**		Ø 20,64	M/T
	79-80				**PF059**		Ø 20,64	M/T
	79-80				**PF060**		Ø 20,64	A/T
	79-80				**PF293**		Ø 20,64	A/T
1.6 i SW Eng.YS (81kW)	78-80		R		**CF001**		Ø 14,29	M/T
	78-80		R		**CF000**		Ø 17,46	A/T
	78-80				**PF058**		Ø 20,64	M/T
	78-80				**PF059**		Ø 20,64	M/T
	78-80				**PF060**		Ø 20,64	M/T+A/T
	78-80				**PF293**		Ø 20,64	A/T
1.6 SW Eng.YN (55kW)	76-80		R		**CF001**		Ø 14,29	M/T
	76-80		R		**CF000**		Ø 17,46	A/T
	76-80				**PF058**		Ø 20,64	M/T
	76-80				**PF059**		Ø 20,64	M/T
	76-80				**PF060**		Ø 20,64	M/T+A/T
	76-80				**PF293**		Ø 20,64	A/T
Santana II (32B) 8/81-12/84								
1.3 Eng.FZ (44kW)	81-83		R		**CF001**		Ø 14,29	
	81-83		R		**CF532**		Ø 14,29	Alu
	81-83				**PF178**		Ø 20,64	+Servo, LHD
	81-83				**PF179**		Ø 20,64	+Servo, RHD
1.6 Eng.DT/ WV (55kW)	81-84		R		**CF001**		Ø 14,29	
	81-84		R		**CF532**		Ø 14,29	Alu
	81-84		R		**CF080**		Ø 15,87	M/T
	81-84		R		**CF725**		Ø 15,87	Alu, M/T
	81-84		R		**CF000**		Ø 17,46	A/T
	81-84		R		**CF239**		Ø 17,46	Alu, A/T
	8/83-7/84				**PF179**		Ø 20,64	+Servo, RHD
	81-84				**PF058**		Ø 20,64	
	81-84				**PF059**		Ø 20,64	

VOLKSWAGEN

		Spare Parts	F/R	L/R	FRITECH ref.		DIMENSIONS mm.	NOTE
1.6 Eng.DT/ WV (55kW)	81-84				**PF178**		Ø 20,64	+Servo, LHD
1.6 Eng.YP (63kW)	81-82		R		**CF001**		Ø 14,29	
	81-82		R		**CF532**		Ø 14,29	Alu
	81-82		R		**CF080**		Ø 15,87	M/T
	81-82		R		**CF725**		Ø 15,87	Alu, M/T
	81-82		R		**CF000**		Ø 17,46	A/T
	81-82		R		**CF239**		Ø 17,46	Alu, A/T
	81-82				**PF058**		Ø 20,64	
	81-82				**PF059**		Ø 20,64	
	81-82				**PF178**		Ø 20,64	+Servo, LHD
	81-82				**PF179**		Ø 20,64	+Servo, RHD
1.6 D Eng.CR/ JK (40kW)	81-84		R		**CF001**		Ø 14,29	
	81-84		R		**CF532**		Ø 14,29	Alu
	81-84		R		**CF080**		Ø 15,87	M/T
	81-84		R		**CF725**		Ø 15,87	Alu, M/T
	81-84		R		**CF000**		Ø 17,46	A/T
	81-84		R		**CF239**		Ø 17,46	Alu, A/T
	81-84				**PF058**		Ø 20,64	M/T, LHD
	81-84				**PF059**		Ø 20,64	M/T, LHD
	81-84				**PF178**		Ø 20,64	M/T, LHD
	81-84				**PF179**		Ø 20,64	RHD
1.6 TD Eng.CY (51kW)	81-84		R		**CF001**		Ø 14,29	
	81-84		R		**CF532**		Ø 14,29	Alu
	81-84		R		**CF000**		Ø 17,46	A/T
	81-84		R		**CF239**		Ø 17,46	Alu, A/T
	81-84				**PF060**		Ø 20,64	LHD
	81-84				**PF178**		Ø 20,64	LHD
	81-84				**PF179**		Ø 20,64	RHD
1.8 Eng.DS (66kW)	83-84		R		**CF080**		Ø 15,87	M/T
	83-84		R		**CF725**		Ø 15,87	Alu, M/T
	83-84		R		**CF000**		Ø 17,46	A/T
	83-84		R		**CF239**		Ø 17,46	Alu, A/T
	83-84				**PF058**		Ø 20,64	
	83-84				**PF059**		Ø 20,64	
	83-84				**PF178**		Ø 20,64	LHD
1.9 Eng.WN (85kW)	81-83		R		**CF000**		Ø 17,46	
	81-83		R		**CF239**		Ø 17,46	Alu, A/T
	81-83				**PF058**		Ø 20,64	LHD
	81-83				**PF178**		Ø 20,64	LHD
	81-83				**PF179**		Ø 20,64	RHD
2.0, Syncro Eng.HP/ JS (85kW)	83-84		R		**CF000**		Ø 17,46	
	83-84		R		**CF239**		Ø 17,46	Alu, A/T
	83-84				**PF177**		Ø 20,64	LHD
	83-84				**PF178**		Ø 20,64	LHD
	83-84				**PF179**		Ø 20,64	RHD
2.1 Eng.WE (85kW)	82-83				**PF178**		Ø 20,64	Sweden, LHD
Scirocco I (53) 2/74-7/80								
1.1 Eng.FA/ GG (37kW)	74-79		R		**CF001**		Ø 14,29	
	74-79				**PF058**		Ø 20,64	+Servo
	74-79				**PF059**		Ø 20,64	+Servo
1.3 Eng.GF (44kW)	79-80		R		**CF001**		Ø 14,29	
	79-80				**PF058**		Ø 20,64	+Servo
	79-80				**PF059**		Ø 20,64	+Servo
1.5 Eng.FH (51kW)	74-80		R		**CF001**		Ø 14,29	
	74-80		R		**CF000**		Ø 17,46	Incl. Sweden, A/T
	74-80				**PF058**		Ø 20,64	Incl. Sweden, +Servo
	74-80				**PF059**		Ø 20,64	Incl. Sweden, +Servo
1.5 Eng.JB (51kW)	74-80		R		**CF001**		Ø 14,29	
	74-80		R		**CF000**		Ø 17,46	Incl. Sweden, A/T
	74-80				**PF058**		Ø 20,64	Incl. Sweden, +Servo
	74-80				**PF059**		Ø 20,64	Incl. Sweden, +Servo
1.6 Eng.EG (81kW)	76-80		R		**CF001**		Ø 14,29	
	76-80		R		**CF000**		Ø 17,46	Incl. Sweden, A/T
	76-80				**PF058**		Ø 20,64	Incl. Sweden, +Servo

		Spare Parts	F/R	L/R	FRITECH ref.		DIMENSIONS mm.	NOTE
1.6 Eng.EG (81kW)	76-80				**PF059**		Ø 20,64	Incl. Sweden, +Servo
1.6 Eng.FP (55kW)	75-77		R		**CF001**		Ø 14,29	
	75-77		R		**CF000**		Ø 17,46	Incl. Sweden, A/T
	75-77				**PF058**		Ø 20,64	Incl. Sweden, +Servo
	75-77				**PF059**		Ø 20,64	Incl. Sweden, +Servo
1.6 Eng.FR (63kW)	75-80		R		**CF001**		Ø 14,29	
	75-80		R		**CF000**		Ø 17,46	Incl. Sweden, A/T
	75-80				**PF058**		Ø 20,64	Incl. Sweden, +Servo
	75-80				**PF059**		Ø 20,64	Incl. Sweden, +Servo
Scirocco II (53B) 8/80-7/92								
1.3 Eng.GF (44kW)	80-83		R		**CF001**		Ø 14,29	Ch -53E022074, -CF
	80-83		R		**CF532**		Ø 14,29	Alu, -CF
	80-83		R		**CF000**		Ø 17,46	Ch -53E022074, +CF
	80-83		R		**CF239**		Ø 17,46	Alu, +CF
	-7/84				**PF005**		Ø 20,64	Ch 53E022075-
	81-83				**PF058**		Ø 20,64	
	81-83				**PF059**		Ø 20,64	LHD/RHD
1.3 Eng.HK (40kW)	83-84		R		**CF001**		Ø 14,29	Ch -53E022074, -CF
	83-84		R		**CF532**		Ø 14,29	Alu, -CF
	83-84		R		**CF000**		Ø 17,46	Ch -53E022074, +CF
	83-84		R		**CF239**		Ø 17,46	Alu, +CF
1.5 Eng.JB (51kW)	80-83		R		**CF000**		Ø 17,46	Incl. Sweden, +CF
	80-83				**PF058**		Ø 20,64	Incl. Sweden
	80-83				**PF059**		Ø 20,64	Incl. Sweden, LHD/RHD
1.6 Eng.EG (81kW)	80-82		R		**CF001**		Ø 14,29	Ch -53E022074, -CF
	80-82		R		**CF532**		Ø 14,29	Alu, -CF
	80-82		R		**CF000**		Ø 17,46	Ch -53E022074, +CF
	80-82		R		**CF239**		Ø 17,46	Alu, +CF
	-82				**PF033**	Ate	Ø 20,64	Ch 53L010001-, -ABS
					PF005		Ø 20,64	Ch 53E022075-53L010000
	80-82				**PF058**		Ø 20,64	
	80-82				**PF059**		Ø 20,64	LHD/RHD
1.6 Eng.EW EM (55kW)	83-89		R		**CF001**		Ø 14,29	Ch -53E022074, -CF
	83-89		R		**CF532**		Ø 14,29	Alu, -CF
	83-89		R		**CF000**		Ø 17,46	Ch -53E022074, +CF
	83-89		R		**CF239**		Ø 17,46	Alu, +CF
	-89				**PF033**	Ate	Ø 20,64	Ch 53L010001-, -ABS
					PF005		Ø 20,64	Ch 53E022075-53L010000
	83-89				**PF059**		Ø 20,64	LHD/RHD
1.6 Eng.EWA (51kW)	83-84		R		**CF001**		Ø 14,29	Ch -53E022074, -CF
	83-84		R		**CF532**		Ø 14,29	Alu, -CF
	83-84		R		**CF000**		Ø 17,46	Ch -53E022074, +CF
	83-84		R		**CF239**		Ø 17,46	Alu, +CF
1.6 Eng.FR (63kW)	80-84		R		**CF001**		Ø 14,29	Ch -53E022074, -CF
	80-84		R		**CF532**		Ø 14,29	Alu, -CF
	80-84		R		**CF000**		Ø 17,46	Ch -53E022074, +CF
	80-84		R		**CF239**		Ø 17,46	Alu, +CF
	-84				**PF033**	Ate	Ø 20,64	Ch 53L010001-, -ABS
					PF005		Ø 20,64	Ch 53E022075-53L010000
	80-84				**PF058**		Ø 20,64	
	80-84				**PF059**		Ø 20,64	LHD/RHD
1.6 Eng.RE (53kW)	86-90		R		**CF001**		Ø 14,29	Ch -53E022074, -CF
	86-90		R		**CF532**		Ø 14,29	Alu, -CF
	86-90		R		**CF000**		Ø 17,46	Ch -53E022074, +CF
	86-90		R		**CF239**		Ø 17,46	Alu, +CF
	-90				**PF033**	Ate	Ø 20,64	Ch 53L010001-, -ABS
					PF005		Ø 20,64	Ch 53E022075-53L010000
	86-90				**PF059**		Ø 20,64	LHD/RHD
1.8 Eng.EX (66kW)	83-92		R		**CF001**		Ø 14,29	Ch -53E022074, -CF
	83-92		R		**CF532**		Ø 14,29	Alu, -CF
	83-92		R		**CF000**		Ø 17,46	Ch -53E022074, +CF
	83-92		R		**CF239**		Ø 17,46	Alu, +CF
	-7/92				**PF033**	Ate	Ø 20,64	Ch 53L010001-, -ABS
					PF005		Ø 20,64	Ch 53E022075-53L010000

VOLKSWAGEN

		Spare Parts	F/R	L/R	FRITECH ref.		DIMENSIONS mm.	NOTE
1.8 Eng.EX (66kW)	83-92				**PF059**		Ø 20,64	LHD/RHD
1.8 Eng.JH (70kW)	85-92		R		**CF001**		Ø 14,29	Ch -53E022074, -CF
	85-92		R		**CF532**		Ø 14,29	Alu, -CF
	85-92		R		**CF000**		Ø 17,46	Ch -53E022074, +CF
	85-92		R		**CF239**		Ø 17,46	Alu, +CF
	-7/92				**PF033**	Ate	Ø 20,64	Ch 53L010001-, -ABS
					PF005		Ø 20,64	Ch 53E022075-53L010000
	85-92				**PF058**		Ø 20,64	
	85-92				**PF059**		Ø 20,64	LHD/RHD
1.8 16v Eng.KR (102kW)	85-89		R		**CF001**		Ø 14,29	Ch -53E022074, -CF
	85-89		R		**CF532**		Ø 14,29	Alu, -CF
	85-89		R		**CF000**		Ø 17,46	Ch -53E022074, +CF
	85-89		R		**CF239**		Ø 17,46	Alu, +CF
1.8 16v GTi Eng.PL (95kW)	86-92		R		**CF001**		Ø 14,29	Ch -53E022074, -CF
	86-92		R		**CF532**		Ø 14,29	Alu, -CF
	86-92		R		**CF000**		Ø 17,46	Ch -53E022074, +CF
	86-92		R		**CF239**		Ø 17,46	Alu, +CF
1.8 GTI Eng.DX/ EV/ PB (82kW)	82-89		R		**CF001**		Ø 14,29	Ch -53E022074, -CF
	82-89		R		**CF532**		Ø 14,29	Alu, -CF
	82-89		R		**CF000**		Ø 17,46	Ch -53E022074, +CF
	82-89		R		**CF239**		Ø 17,46	Alu, +CF
	-89				**PF033**	Ate	Ø 20,64	Ch 53L010001-, -ABS
					PF005		Ø 20,64	Ch 53E022075-53L010000
	82-83				**PF058**		Ø 20,64	
	82-89				**PF059**		Ø 20,64	LHD/RHD
Scirocco III (137,138) 10/08-								
1.4 TSi Eng.CAVD/ CNWA/ CTHD (118kW)	08-				**CZ080**	Sachs	Ø 19,05	Alu, Cod. ID PR 0EJ
1.4 TSi Eng.CAXA/ CMSB (90kW)	08-				**CZ080**	Sachs	Ø 19,05	Alu, Cod. ID PR 0EJ
2.0 R Eng.CDLC (188kW)	09-				**CZ080**	Sachs	Ø 19,05	Alu, Cod. ID PR 0EJ
2.0 TDi Eng.CBBB/ CFGB (125kW)	09-				**CZ080**	Sachs	Ø 19,05	Alu, Cod. ID PR 0EJ
2.0 TDi Eng.CBDB/ CFHC (103kW)	08-				**CZ080**	Sachs	Ø 19,05	Alu, Cod. ID PR 0EJ
2.0 TDi Eng.CFHB (100kW)	10-				**CZ080**	Sachs	Ø 19,05	Alu, Cod. ID PR 0EJ
2.0 TFSI Eng.CAWB (147kW)	08-				**CZ080**	Sachs	Ø 19,05	Alu, Cod. ID PR 0EJ
2.0 TFSi R Eng.CDLA (195kW)	09-				**CZ080**	Sachs	Ø 19,05	Alu, Cod. ID PR 0EJ
2.0 TSi Eng.CCZB (155kW)	09-				**CZ080**	Sachs	Ø 19,05	Alu, Cod. ID PR 0EJ
Sharan I (7M8, 7M9) 9/95-9/10								
1.8 T. 20v Eng.AJH/ AWC (110kW)	5/00-				**PF822**	Ate	Ø 25,40	Alu, +ABS, +ESP
					PF600	Ate	Ø 25,40	Ch 7MZW020919-, Alu, +ABS, -ESP
	97-				**PF253**	Ate	Ø 23,81	Ch -7MW020918, +ABS
	97-				**PF309**	Ate	Ø 23,81	Ch -7MW020918, -ABS
	97-10				**PZ091**	Fte	Ø 19,05	Alu
1.9 TDi Eng.1Z (66kW)	5/00-				**PF822**	Ate	Ø 25,40	Alu, +ABS, +ESP
					PF600	Ate	Ø 25,40	Ch 7MZW020919-, Alu, +ABS, -ESP
	95-				**PF253**	Ate	Ø 23,81	Ch -7MW020918, +ABS
	11/95-				**PF309**	Ate	Ø 23,81	Ch -7MW020918, -ABS
	95-10				**PZ091**	Fte	Ø 19,05	Alu
1.9 TDi Eng.AFN/ AVG (81kW)	-00				**PF600**	Ate	Ø 25,40	Ch 7MZW020919-, Alu, +ABS, -ESP
	96-				**PF253**	Ate	Ø 23,81	Ch -7MW020918, +ABS
	96-				**PF309**	Ate	Ø 23,81	Ch -7MW020918, -ABS
	9/96-4/00				**PZ091**	Fte	Ø 19,05	Alu
1.9 TDi Eng.AHU/ ANU (66kW)	5/00-				**PF822**	Ate	Ø 25,40	Alu, +ABS, +ESP
					PF600	Ate	Ø 25,40	Ch 7MZW020919-, Alu, +ABS, -ESP
	95-				**PF253**	Ate	Ø 23,81	Ch -7MW020918, +ABS
	11/95-				**PF309**	Ate	Ø 23,81	Ch -7MW020918, -ABS
	95-10				**PZ091**	Fte	Ø 19,05	Alu
1.9 TDi Eng.ASZ (96kW)	02-				**PF822**	Ate	Ø 25,40	Alu, +ABS, +ESP
					PF600	Ate	Ø 25,40	Ch 7MZW020919-, Alu, +ABS, -ESP
	02-10				**PZ091**	Fte	Ø 19,05	Alu
1.9 TDi Eng.BTB (110kW)	05-10				**PZ091**	Fte	Ø 19,05	Alu
1.9 TDi, 4motion Eng.AUY/ BVK (85kW)	00-				**PF822**	Ate	Ø 25,40	Alu, +ABS, +ESP
	00-10				**PZ091**	Fte	Ø 19,05	Alu
2.0 Eng.ADY/ ATM (85kW)	5/00-				**PF822**	Ate	Ø 25,40	Alu, +ABS, +ESP
					PF600	Ate	Ø 25,40	Ch 7MZW020919-, Alu, +ABS, -ESP
	95-				**PF253**	Ate	Ø 23,81	Ch -7MW020918, +ABS

		Spare Parts	F/R	L/R	FRITECH ref.		DIMENSIONS mm.	NOTE
2.0 Eng.ADY/ ATM (85kW)	11/95-				**PF309**	Ate	Ø 23,81	Ch -7MW020918, -ABS
	95-10				**PZ091**	Fte	Ø 19,05	Alu
2.0 TDi Eng.BKD/ BRT (103kW)	8/06-				**PF822**	Ate	Ø 25,40	Alu, +ABS, +ESP
	8/06-				**PZ091**	Fte	Ø 19,05	Alu
2.8 V6 24v, 4motion Eng.AYL (150kW)	5/00-				**PF822**	Ate	Ø 25,40	Alu, +ABS, +ESP
					PF600	Ate	Ø 25,40	Ch 7MZW020919-, Alu, +ABS, -ESP
	00-				**PF253**	Ate	Ø 23,81	Ch -7MW020918, +ABS
	00-				**PF309**	Ate	Ø 23,81	Ch -7MW020918, -ABS
	00-10				**PZ091**	Fte	Ø 19,05	Alu
2.8 VR6, Syncro Eng.AAA/ AMY (128kW)					**PF600**	Ate	Ø 25,40	Ch 7MZW020919-, Alu, +ABS, -ESP
	96-				**PF253**	Ate	Ø 23,81	Ch -7MW020918, +ABS
	96-				**PF309**	Ate	Ø 23,81	Ch -7MW020918, -ABS
	11/96-4/00				**PZ091**	Fte	Ø 19,05	Alu
Touareg I (7LA) 10/02-4/10								
2.5 R5 TDi Eng.BAC/ BPE (128kW)	03-10				**PF960**	Ate	Ø 26,99	Alu
2.5 TDi Eng.BLK/ BPD (120kW)	03-10				**PF960**	Ate	Ø 26,99	Alu
3.0 TDi Eng.BUN (155kW)	06-10				**PF960**	Ate	Ø 26,99	Alu
3.0 V6 TDi Eng.BKS (165kW)	04-10				**PF960**	Ate	Ø 26,99	Alu
3.0 V6 TDi Eng.CAS (176kW)	07-10				**PF960**	Ate	Ø 26,99	Alu
3.2 V6 Eng.AZZ/ BKJ (162kW)	02-10				**PF960**	Ate	Ø 26,99	Alu
3.2 V6 Eng.BMV/ BMX (177kW)	04-10				**PF960**	Ate	Ø 26,99	Alu
3.6 V6 FSI Eng.BHK/ BHL (206kW)	06-10				**PF960**	Ate	Ø 26,99	Alu
4.2 FSi V8 Eng.BAR (257kW)	06-10				**PF960**	Ate	Ø 26,99	Alu
4.2 V8 Eng.AXQ/ BHX (228kW)	02-10				**PF960**	Ate	Ø 26,99	Alu
5.0 V10 TDi Eng.AYH/ BLE/ BWF (230kW)	02-10				**PF960**	Ate	Ø 26,99	Alu
5.0 V10 TDi R50 Eng.CBWA (258kW)	08-10				**PF960**	Ate	Ø 26,99	Alu
6.0 W12 Eng.BJN (331kW)	05-10				**PF960**	Ate	Ø 26,99	Alu
Touran I (1T1, 1T2, 1T3) 2/03-8/15								
1.4 16v TSi Eng.BMY/ CAVC/ CTHC (103kW)	06-				**PF647**	Ate	Ø 22,20	Alu
	06-				**PF869**	Ate	Ø 22,20	Alu
	06-				**CZ080**	Sachs	Ø 19,05	Alu, Cod. ID PR 0EJ
1.4 TSi Eng.BLG/ CAVB/ CTHB (125kW)	07-				**PF869**	Ate	Ø 22,20	Alu
	07-				**CZ080**	Sachs	Ø 19,05	Alu, Cod. ID PR 0EJ
1.4 TSi EcoFuel Eng.CDGA (110kW)	09-				**PF869**	Ate	Ø 22,20	Alu
	09-4/10				**CZ080**	Sachs	Ø 19,05	Alu, Cod. ID PR 0EJ
1.6 Eng.BSE/ BSF/ BGU (75kW)	03-				**PF647**	Ate	Ø 22,20	Alu
	06-				**PF869**	Ate	Ø 22,20	Alu
	03-				**CZ077**	Fte	Ø 19,05	Pla
	03-				**CZ099**	Fte	Ø 19,05	
	03-				**CZ080**	Sachs	Ø 19,05	Alu, Cod. ID PR 0EJ
1.6 FSI Eng.BAG/ BLF/ BLP (85kW)	03-				**PF647**	Ate	Ø 22,20	Alu
	03-				**CZ077**	Fte	Ø 19,05	Pla
	03-				**CZ099**	Fte	Ø 19,05	
	03-				**CZ080**	Sachs	Ø 19,05	Alu, Cod. ID PR 0EJ
1.6 TDi Eng.CAYB (66kW)	10-				**CZ080**	Sachs	Ø 19,05	Alu, Cod. ID PR 0EJ
1.6 TDi Eng.CAYC (77kW)	10-				**CZ080**	Sachs	Ø 19,05	Alu, Cod. ID PR 0EJ
1.9 TDi Eng.AVQ (74kW)	03-				**PF647**	Ate	Ø 22,20	Alu
1.9 TDi Eng.BKC (77kW)	03-				**PF647**	Ate	Ø 22,20	Alu
	06-				**PF869**	Ate	Ø 22,20	Alu
1.9 TDi Eng.BRU/ BXF (66kW)	04-				**PF869**	Ate	Ø 22,20	Alu
2.0 EcoFuel Eng.BSX (80kW)	06-				**PF869**	Ate	Ø 22,20	Alu
2.0 FSI Eng.AXW/ BLR/ BLX/ BLY (110kW)	03-				**PF647**	Ate	Ø 22,20	Alu
2.0 TDi Eng.AZV (100kW)	03-				**PF647**	Ate	Ø 22,20	Alu
2.0 TDi Eng.BKD/ BMM/ CFHC (103kW)	03-				**PF647**	Ate	Ø 22,20	Alu
	06-				**PF869**	Ate	Ø 22,20	Alu
2.0 TDi 16v Eng.BMN/ CFJA (125kW)	05-				**PF869**	Ate	Ø 22,20	Alu
Up 1/12-								
1.0 Eng.CHYA (44kW)	11-		R		**CF239**		Ø 17,46	Alu
1.0 Eng.CHYB (55kW)	12-		R		**CF239**		Ø 17,46	Alu
1.0 Eco up Eng.CPGA (50kW)	13-		R		**CF121**		Ø 19,05	Alu
e-UP Eng.EABA (60kW)	13-		R		**CF121**		Ø 19,05	Alu
Vento (1H2) 11/91-9/98								
1.4 Eng.ABD (40kW)	91-98		R		**CF000**		Ø 17,46	
	-9/98				**PF310**	Ate	Ø 22,20	Ch 1S385335-, +ABS, RHD

VOLKSWAGEN

		Spare Parts	F/R	L/R	FRITECH ref.		DIMENSIONS mm.	NOTE
1.4 Eng.ABD (40kW)	91-98				**PF549**	Ate	Ø 22,20	Ch 1S385335-, Alu, +ABS
	91-98				**PF041**	Ate	Ø 20,64	-ABS
1.4 Eng.AEX (44kW)	91-94		R		**CF000**		Ø 17,46	
	-9/98				**PF310**	Ate	Ø 22,20	Ch 1S385335-, +ABS, RHD
	91-98				**PF549**	Ate	Ø 22,20	Ch 1S385335-, Alu, +ABS
	91-94				**PF041**	Ate	Ø 20,64	-ABS
1.6 Eng.ABU (55kW)	9/92-		R		**CF000**		Ø 17,46	Ch -1S430000
	-98		R		**CF107**		Ø 19,05	Ch 1S430001-
	-98		R		**CF121**		Ø 19,05	Ch 1S430001-, Alu
	-9/98				**PF310**	Ate	Ø 22,20	Ch 1S385335-, +ABS, RHD
	92-98				**PF549**	Ate	Ø 22,20	Ch 1S385335-, Alu, +ABS
	9/92-				**PF041**	Ate	Ø 20,64	Ch -1S430000, -ABS
	-98				**PF039**	Luc	Ø 22,20	Ch 1S430001-, -ABS
	-98				**PF248**	Luc	Ø 22,20	Ch 1S430001-, Alu, -ABS
1.6 Eng.AEA/ AEE (55kW)	9/92-		R		**CF000**		Ø 17,46	Ch -1S430000
	-98		R		**CF107**		Ø 19,05	Ch 1S430001-
	-98		R		**CF121**		Ø 19,05	Ch 1S430001-, Alu
	-9/98				**PF310**	Ate	Ø 22,20	Ch 1S385335-, +ABS, RHD
	92-98				**PF549**	Ate	Ø 22,20	Ch 1S385335-, Alu, +ABS
	9/92-				**PF041**	Ate	Ø 20,64	Ch -1S430000, -ABS
	-98				**PF039**	Luc	Ø 22,20	Ch 1S430001-, -ABS
	-98				**PF248**	Luc	Ø 22,20	Ch 1S430001-, Alu, -ABS
1.6 Eng.AEK/ AFT (74kW)	7/94-98		R		**CF107**		Ø 19,05	A/T
	7/94-98		R		**CF121**		Ø 19,05	Alu, A/T
					PF609	Ate	Ø 23,81	Ch -1HZS385334, +ABS
	-98				**PF493**	Ate	Ø 23,81	Ch 1HZS385335-, Alu, +ABS
	7/94-98				**PF039**	Luc	Ø 22,20	-ABS
	7/94-98				**PF248**	Luc	Ø 22,20	Alu, -ABS
1.8 Eng.AAM (55kW)	91-94		R		**CF000**		Ø 17,46	M/T
	91-98		R		**CF107**		Ø 19,05	A/T
	91-98		R		**CF121**		Ø 19,05	Alu, A/T
	-9/98				**PF310**	Ate	Ø 22,20	Ch 1S385335-, +ABS, RHD
	91-98				**PF549**	Ate	Ø 22,20	Ch 1S385335-, Alu, +ABS
	91-98				**PF041**	Ate	Ø 20,64	-ABS
1.8 Eng.ABS/ ADZ (66kW)	91-		R		**CF000**		Ø 17,46	Ch -1S430000, M/T
	-98		R		**CF107**		Ø 19,05	Ch 1S430001-, A/T
	-98		R		**CF121**		Ø 19,05	Ch 1S430001-, Alu, A/T
	-9/98				**PF310**	Ate	Ø 22,20	Ch 1S385335-, +ABS, RHD
	91-98				**PF549**	Ate	Ø 22,20	Ch 1S385335-, Alu, +ABS
					PF609	Ate	Ø 23,81	Ch -1HZS385334, +ABS
	-98				**PF493**	Ate	Ø 23,81	Ch 1HZS385335-, Alu, +ABS
	91-98				**PF041**	Ate	Ø 20,64	Exc. GT, -ABS
	91-98				**PF039**	Luc	Ø 22,20	GT, -ABS
	91-98				**PF248**	Luc	Ø 22,20	Alu, GT, -ABS
	91-98				**PZ061**	Ate	Ø 19,05	
1.9 D Eng.1Y (47-50kW)	91-98		R		**CF000**		Ø 17,46	
	-9/98				**PF310**	Ate	Ø 22,20	Ch 1S385335-, +ABS, RHD
	91-98				**PF549**	Ate	Ø 22,20	Ch 1S385335-, Alu, +ABS
	91-94				**PF041**	Ate	Ø 20,64	-ABS
1.9 SDi Eng.AEY (47kW)	97-98		R		**CF000**		Ø 17,46	
	-9/98				**PF310**	Ate	Ø 22,20	Ch 1S385335-, +ABS, RHD
	97-98				**PF549**	Ate	Ø 22,20	Ch 1S385335-, Alu, +ABS
	97-98				**PF041**	Ate	Ø 20,64	-ABS
	97-				**PZ150**	Fte	Ø 15,87	
1.9 TD Eng.AAZ (55kW)	91-		R		**CF000**		Ø 17,46	Ch -1S430000
	-98		R		**CF107**		Ø 19,05	Ch 1S430001-
	-98		R		**CF121**		Ø 19,05	Ch 1S430001-, Alu
	-9/98				**PF310**	Ate	Ø 22,20	Ch 1S385335-, +ABS, RHD
	91-98				**PF549**	Ate	Ø 22,20	Ch 1S385335-, Alu, +ABS
	91-				**PF041**	Ate	Ø 20,64	Ch -1S430000, -ABS
	-98				**PF039**	Luc	Ø 22,20	Ch 1S430001-, -ABS
	-98				**PF248**	Luc	Ø 22,20	Ch 1S430001-, Alu, -ABS
1.9 TDi Eng.1Z (66kW)	93-98		R		**CF107**		Ø 19,05	A/T
	93-98		R		**CF121**		Ø 19,05	Alu, A/T

		Spare Parts	F/R	L/R	FRITECH ref.		DIMENSIONS mm.	NOTE
1.9 TDi Eng.1Z (66kW)	93-				**PF609**	Ate	Ø 23,81	Ch -1HZS385334, +ABS
	-98				**PF493**	Ate	Ø 23,81	Ch 1HZS385335-, Alu, +ABS
	93-98				**PF039**	Luc	Ø 22,20	-ABS
	93-98				**PF248**	Luc	Ø 22,20	Alu, -ABS
	93-98				**CZ025**	Ate	Ø 23,81	Alu
	93-98				**CZ093**	Ate	Ø 23,81	
	93-98				**PZ061**	Ate	Ø 19,05	
1.9 TDi Eng.AFN (81kW)	96-98		R		**CF107**		Ø 19,05	A/T
	96-98		R		**CF121**		Ø 19,05	Alu, A/T
	96-98				**PF493**	Ate	Ø 23,81	Alu, +ABS
	96-98				**PF039**	Luc	Ø 22,20	-ABS
	96-98				**PF248**	Luc	Ø 22,20	Alu, -ABS
	96-98				**CZ025**	Ate	Ø 23,81	Alu
	96-98				**CZ093**	Ate	Ø 23,81	
	96-98				**PZ061**	Ate	Ø 19,05	
1.9 TDi Eng.AHU/ ALE (66kW)	93-98		R		**CF107**		Ø 19,05	A/T
	93-98		R		**CF121**		Ø 19,05	Alu, A/T
	93-				**PF609**	Ate	Ø 23,81	Ch -1HZS385334, +ABS
	-98				**PF493**	Ate	Ø 23,81	Ch 1HZS385335-, Alu, +ABS
	93-98				**PF039**	Luc	Ø 22,20	-ABS
	93-98				**PF248**	Luc	Ø 22,20	Alu, -ABS
	93-98				**CZ025**	Ate	Ø 23,81	Alu
	93-98				**CZ093**	Ate	Ø 23,81	
	93-98				**PZ061**	Ate	Ø 19,05	
2.0 Eng.2E/ ADY/ AGG/ AKR (85kW)	91-				**PF609**	Ate	Ø 23,81	Ch -1HZS385334, +ABS
	-98				**PF493**	Ate	Ø 23,81	Ch 1HZS385335-, Alu, +ABS
	91-98				**PF039**	Luc	Ø 22,20	-ABS
	91-98				**PF248**	Luc	Ø 22,20	Alu, -ABS
	91-98				**CZ025**	Ate	Ø 23,81	Alu
	91-98				**CZ093**	Ate	Ø 23,81	
2.0 GTi 16v Eng.ABF (110kW)	91-98				**PF039**	Luc	Ø 22,20	-ABS
	91-98				**PF248**	Luc	Ø 22,20	Alu, -ABS
2.8 VR6 Eng.AAA (128kW)					**PF609**	Ate	Ø 23,81	Ch -1HZS385334, +ABS
	-98				**PF493**	Ate	Ø 23,81	Ch 1HZS385335-, Alu, +ABS
	92-98				**CZ025**	Ate	Ø 23,81	Alu
	92-98				**CZ093**	Ate	Ø 23,81	
	92-98				**PZ061**	Ate	Ø 19,05	

VOLKSWAGEN LCV

Amarok 10/10-								
2.0 BiTDi, 4motion Eng.CDCA (120kW)	10-		R		**CF926**		Ø 26,99	Alu
2.0 TDi, 4motion Eng.CDBA/ CNFA (90kW)	10-		R		**CF926**		Ø 26,99	Alu
2.0 TDi, 4motion Eng.CNEA/ CSHA (132kW)	11-		R		**CF926**		Ø 26,99	Alu
2.0 TSi Eng.CFPA (118kW)	10-		R		**CF926**		Ø 26,99	Alu
Caddy I (14) 8/82-7/92								
1.5 Eng.JB (51kW)	91-94		R		**CF239**	Vag	Ø 17,46	Alu
	8/82-		R		**CF000**		Ø 17,46	Ch -14H011048
	-83		R		**CF107**		Ø 19,05	Ch 14H011049-
	-83		R		**CF121**		Ø 19,05	Ch 14H011049-, Alu, LHD
	-83				**PF033**	Ate	Ø 20,64	Ch 14H011049-, -ABS, LHD
	8/82-				**PF059**		Ø 20,64	Ch -14H011048
	82-83				**PF058**		Ø 20,64	
1.6 Eng.EM/ EW (55kW)	8/82-		R		**CF000**		Ø 17,46	Ch -14H011048
	-7/92		R		**CF107**		Ø 19,05	Ch 14H011049-
	-7/92		R		**CF121**		Ø 19,05	Ch 14H011049-, Alu, LHD
	-7/92				**PF033**	Ate	Ø 20,64	Ch 14H011049-, -ABS, LHD
	8/82-				**PF059**		Ø 20,64	Ch -14H011048
	8/82- 7/92				**PF058**		Ø 20,64	
1.6 D Eng.JK/ ME (40kW)	8/82-		R		**CF000**		Ø 17,46	Ch -14H011048
	-7/92		R		**CF107**		Ø 19,05	Ch 14H011049-
	-7/92		R		**CF121**		Ø 19,05	Ch 14H011049-, Alu, LHD
	-7/92				**PF033**	Ate	Ø 20,64	Ch 14H011049-, -ABS, LHD
	8/82-				**PF059**		Ø 20,64	Ch -14H011048
	8/82- 7/92				**PF058**		Ø 20,64	

VOLKSWAGEN LCV

		Spare Parts	F/R	L/R	FRITECH ref.		DIMENSIONS mm.	NOTE
1.8 Eng.JH (70kW)	85-		R		**CF000**		Ø 17,46	Ch -14H011048
	-7/92		R		**CF107**		Ø 19,05	Ch 14H011049-
	-7/92		R		**CF121**		Ø 19,05	Ch 14H011049-, Alu, LHD
	-7/92				**PF033**	Ate	Ø 20,64	Ch 14H011049-, -ABS, LHD
	85-				**PF059**		Ø 20,64	Ch -14H011048
	85-7/92				**PF058**		Ø 20,64	
Caddy II (9K9) 11/95-1/04								
1.4 Eng.AEX/ AKV/ APQ (44kW)	95-04		R		**CF127**		Ø 20,64	Alu
	95-04				**PF493**	Ate	Ø 23,81	Alu, +ABS
	-04				**PF583**	Bch	Ø 22,20	Ch KX514001-, Alu, -ABS, RHD
	95-04				**PF039**	Luc	Ø 22,20	-ABS
	95-04				**PF248**	Luc	Ø 22,20	Alu, -ABS
1.4 Eng.AUD (44kW)	95-04		R		**CF127**		Ø 20,64	Alu
	95-04				**PF493**	Ate	Ø 23,81	Alu, +ABS
	-04				**PF583**	Bch	Ø 22,20	Ch KX514001-, Alu, -ABS, RHD
	95-04				**PF039**	Luc	Ø 22,20	-ABS
	95-04				**PF248**	Luc	Ø 22,20	Alu, -ABS
1.4 16v Eng.AHW/ AKQ/ APE/ AUA (55kW)	00-04		R		**CF127**		Ø 20,64	Alu
	00-04				**PF493**	Ate	Ø 23,81	Alu, +ABS
	-04				**PF583**	Bch	Ø 22,20	Ch KX514001-, Alu, -ABS, RHD
	00-04				**PF039**	Luc	Ø 22,20	-ABS
	00-04				**PF248**	Luc	Ø 22,20	Alu, -ABS
1.6 Eng.1F (53-55kW)	95-00		R		**CF127**		Ø 20,64	Alu
	95-00				**PF493**	Ate	Ø 23,81	Alu, +ABS
	-03				**PF583**	Bch	Ø 22,20	Ch KX514001-, Alu, -ABS, RHD
	95-00				**PF039**	Luc	Ø 22,20	-ABS
	95-00				**PF248**	Luc	Ø 22,20	Alu, -ABS
1.6 Eng.AEE (55kW)	95-00		R		**CF127**		Ø 20,64	Alu
	95-00				**PF493**	Ate	Ø 23,81	Alu, +ABS
	-03				**PF583**	Bch	Ø 22,20	Ch KX514001-, Alu, -ABS, RHD
	95-00				**PF039**	Luc	Ø 22,20	-ABS
	95-00				**PF248**	Luc	Ø 22,20	Alu, -ABS
1.7 SDi Eng.AHB (42kW)	96-00		R		**CF127**		Ø 20,64	Alu
	96-00				**PF493**	Ate	Ø 23,81	Alu, +ABS
	96-00				**PF039**	Luc	Ø 22,20	-ABS
	96-00				**PF248**	Luc	Ø 22,20	Alu, -ABS
1.9 D Eng.1Y (47kW)	95-04		R		**CF127**		Ø 20,64	Alu
	95-04				**PF493**	Ate	Ø 23,81	Alu, +ABS
	-03				**PF583**	Bch	Ø 22,20	Ch KX514001-, Alu, -ABS, RHD
	95-04				**PF039**	Luc	Ø 22,20	-ABS
	95-04				**PF248**	Luc	Ø 22,20	Alu, -ABS
	95-04				**PZ099**	Sachs	Ø 15,87	
1.9 D Eng.AEF (47kW)	95-04		R		**CF127**		Ø 20,64	Alu
	95-04				**PF493**	Ate	Ø 23,81	Alu, +ABS
	-03				**PF583**	Bch	Ø 22,20	Ch KX514001-, Alu, -ABS, RHD
	95-04				**PF039**	Luc	Ø 22,20	-ABS
	95-04				**PF248**	Luc	Ø 22,20	Alu, -ABS
	95-04				**PZ099**	Sachs	Ø 15,87	
1.9 SDi Eng.AEY/ AYQ (47kW)	95-04		R		**CF127**		Ø 20,64	Alu
	95-04				**PF493**	Ate	Ø 23,81	Alu, +ABS
	-04				**PF583**	Bch	Ø 22,20	Ch KX514001-, Alu, -ABS, RHD
	95-04				**PF039**	Luc	Ø 22,20	-ABS
	95-04				**PF248**	Luc	Ø 22,20	Alu, -ABS
	95-04				**PZ099**	Sachs	Ø 15,87	
1.9 TDi Eng.AHU/ ALE/ ALH (66kW)	96-04		R		**CF127**		Ø 20,64	Alu
	96-04				**PF493**	Ate	Ø 23,81	Alu, +ABS
	-03				**PF583**	Bch	Ø 22,20	Ch KX514001-, Alu, -ABS, RHD
	96-04				**PF039**	Luc	Ø 22,20	-ABS
	96-04				**PF248**	Luc	Ø 22,20	Alu, -ABS
	96-03				**PZ061**	Ate	Ø 19,05	
	96-04				**PZ099**	Sachs	Ø 15,87	
Caddy II (9U7) Pick-Up 11/95-2/04								
1.4 Eng.AEX/ AKV/ APQ (44kW)	11/95-		R		**CF127**		Ø 20,64	Alu
	11/95-				**PF039**	Luc	Ø 22,20	-ABS

		Spare Parts	F/R	L/R	FRITECH ref.		DIMENSIONS mm.	NOTE
1.4 Eng.AEX/ AKV/ APQ (44kW)	11/95-				**PF248**	Luc	Ø 22,20	Alu, -ABS
1.4 Eng.AUA (55kW)	00-		R		**CF127**		Ø 20,64	Alu
	00-				**PF039**	Luc	Ø 22,20	-ABS
	00-				**PF248**	Luc	Ø 22,20	Alu, -ABS
1.4 Eng.AUD (44kW)	11/95-		R		**CF127**		Ø 20,64	Alu
	11/95-				**PF039**	Luc	Ø 22,20	-ABS
	11/95-				**PF248**	Luc	Ø 22,20	Alu, -ABS
1.6 Eng.1F (53-55kW)	11/95-		R		**CF127**		Ø 20,64	Alu
	95-				**PF495**	Ate	Ø 23,81	Alu, +ABS
	11/95-				**PF039**	Luc	Ø 22,20	-ABS
	11/95-				**PF248**	Luc	Ø 22,20	Alu, -ABS
1.6 Eng.AEE (55kW)	11/95-		R		**CF127**		Ø 20,64	Alu
	95-				**PF495**	Ate	Ø 23,81	Alu, +ABS
	11/95-				**PF039**	Luc	Ø 22,20	-ABS
	11/95-				**PF248**	Luc	Ø 22,20	Alu, -ABS
1.7 SDi Eng.AHB (42kW)	96-		R		**CF127**		Ø 20,64	Alu
	96-				**PF039**	Luc	Ø 22,20	-ABS
	96-				**PF248**	Luc	Ø 22,20	Alu, -ABS
1.9 D Eng.1Y (47kW)	11/95-		R		**CF127**		Ø 20,64	Alu
	95-				**PF495**	Ate	Ø 23,81	Alu, +ABS
	11/95-				**PF039**	Luc	Ø 22,20	-ABS
	11/95-				**PF248**	Luc	Ø 22,20	Alu, -ABS
1.9 D Eng.AEF (47kW)	11/95-		R		**CF127**		Ø 20,64	Alu
	95-				**PF495**	Ate	Ø 23,81	Alu, +ABS
	11/95-				**PF039**	Luc	Ø 22,20	-ABS
	11/95-				**PF248**	Luc	Ø 22,20	Alu, -ABS
1.9 SDi Eng.AEY/ AYQ (47kW)	11/95-		R		**CF127**		Ø 20,64	Alu
	11/95-				**PF039**	Luc	Ø 22,20	-ABS
	11/95-				**PF248**	Luc	Ø 22,20	Alu, -ABS
1.9 TDi Eng.AHU/ ALE (66kW)	96-		R		**CF127**		Ø 20,64	Alu
	96-				**PF039**	Luc	Ø 22,20	-ABS
	96-				**PF248**	Luc	Ø 22,20	Alu, -ABS
Caddy III (2KA, KB) 3/04-4/15								
1.2 TSi Eng.CBZA (63kW)	10-				**PF869**	Ate	Ø 22,20	Alu
	10-				**CZ080**	Sachs	Ø 19,05	Alu, Cod. ID PR 0EJ
1.2 TSi Eng.CBZB (77kW)	10-				**PF869**	Ate	Ø 22,20	Alu
	10-				**CZ080**	Sachs	Ø 19,05	Alu, Cod. ID PR 0EJ
1.4 16v Eng.BCA (55kW)	04-				**PF647**	Ate	Ø 22,20	Alu
	04-				**CZ080**	Sachs	Ø 19,05	Alu, Cod. ID PR 0EJ
1.4 16v Eng.BUD (59kW)	06-				**PF647**	Ate	Ø 22,20	Alu
	06-				**CZ080**	Sachs	Ø 19,05	Alu, Cod. ID PR 0EJ
1.6 Eng.BGU/ BSE/ BSF (75kW)	05-				**PF647**	Ate	Ø 22,20	Alu
	04-				**CZ080**	Sachs	Ø 19,05	Alu, Cod. ID PR 0EJ
1.6 Eng.BRY (74kW)	05-				**CZ080**	Sachs	Ø 19,05	Alu, Cod. ID PR 0EJ
1.6 BiFuel Eng.CHGA (75kW)	11-				**CZ080**	Sachs	Ø 19,05	Alu, Cod. ID PR 0EJ
1.6 TDi Eng.CAYD (75kW)	10-				**PF869**	Ate	Ø 22,20	Alu
	10-				**CZ080**	Sachs	Ø 19,05	Alu, Cod. ID PR 0EJ
1.6 TDi Eng.CAYE (55kW)	10-				**PF869**	Ate	Ø 22,20	Alu
	10-				**CZ080**	Sachs	Ø 19,05	Alu, Cod. ID PR 0EJ
1.9 TDi Eng.BJB (77kW)	05-				**PF647**	Ate	Ø 22,20	Alu
	04-				**CZ080**	Sachs	Ø 19,05	Alu, Cod. ID PR 0EJ
1.9 TDi Eng.BSU (55kW)	05-				**PF647**	Ate	Ø 22,20	Alu
	05-				**CZ080**	Sachs	Ø 19,05	Alu, Cod. ID PR 0EJ
1.9 TDi 4motion Eng.BLS (77kW)	08-				**PF647**	Ate	Ø 22,20	Alu
	08-				**CZ080**	Sachs	Ø 19,05	Alu, Cod. ID PR 0EJ
2.0 EcoFuel Eng.BSX (80kW)	06-				**PF647**	Ate	Ø 22,20	Alu
	06-				**CZ080**	Sachs	Ø 19,05	Alu, Cod. ID PR 0EJ
2.0 SDi Eng.BDJ/ BST (51kW)	05-				**PF647**	Ate	Ø 22,20	Alu
	04-				**CZ080**	Sachs	Ø 19,05	Alu, Cod. ID PR 0EJ
2.0 TDI Eng.CFJA (125kW)	12-				**PF869**	Ate	Ø 22,20	Alu
2.0 TDi 16v 4motion Eng.BMM/ CFHC (103kW)	07-				**PF647**	Ate	Ø 22,20	Alu
	07-				**CZ080**	Sachs	Ø 19,05	Alu, Cod. ID PR 0EJ
2.0 TDi 4motion Eng.CFHF/ CLCA (81kW)	10-				**PF869**	Ate	Ø 22,20	Alu
	10-				**CZ080**	Sachs	Ø 19,05	Alu, Cod. ID PR 0EJ

VOLKSWAGEN LCV

		Spare Parts	F/R	L/R	FRITECH ref.		DIMENSIONS mm.	NOTE
2.0 TDi, 4motion Eng.CFHE (62kW)	10-				**PF869**	Ate	Ø 22,20	Alu
	10-				**CZ080**	Sachs	Ø 19,05	Alu, Cod. ID PR 0EJ
Crafter (2E) 4/06-								
2.5 TDi Eng.BJJ/ CEBA (65kW)	06-				**PF897**	Bch	Ø 25,40	Alu, Cod. ID PR 5EW
	06-				**PF982**	Bch	Ø 26,99	Alu, Cod. ID PR 0WL/ 0WF/ 0WC, IP
2.5 TDi Eng.BJK/ CEBB (80kW)	06-				**PF897**	Bch	Ø 25,40	Alu, Cod. ID PR 5EW
	06-				**PF982**	Bch	Ø 26,99	Alu, Cod. ID PR 0WL/ 0WF/ 0WC, IP
2.5 TDi Eng.BJL/ CECA (100kW)	06-				**PF897**	Bch	Ø 25,40	Alu, Cod. ID PR 5EW
	06-				**PF982**	Bch	Ø 26,99	Alu, Cod. ID PR 0WL/ 0WF/ 0WC, IP
2.5 TDi Eng.BJM/ CECB (120kW)	06-				**PF897**	Bch	Ø 25,40	Alu, Cod. ID PR 5EW
	06-				**PF982**	Bch	Ø 26,99	Alu, Cod. ID PR 0WL/ 0WF/ 0WC, IP
Fox Van II 4/05-12/11								
1.4 TDi Eng.BNM (51kW)	05-		R		**CF239**		Ø 17,46	Alu
	05-				**PF463**	Fte	Ø 20,64	Alu, +ABS
LT I 28-35 (281-363) 4/75-6/96								
2.0 Eng.CH (55kW)	75-83		R		**CF228**		Ø 25,40	Exc. 4WD
	75-83		R		**CF545**		Ø 26,80	3650 mm
2.4 Eng.DL (66kW)	82-92		R		**CF228**		Ø 25,40	
	82-92		R		**CF545**		Ø 26,80	3650 mm
2.4 D Eng.1S/ ACT (51kW)	89-96		R		**CF228**		Ø 25,40	Exc. 4WD
	89-96		R		**CF545**		Ø 26,80	3650 mm
2.4 D Eng.CP/ DW (55kW)	79-92		R		**CF228**		Ø 25,40	Exc. 4WD
	-7/90		R		**CF545**		Ø 26,80	3650 mm
2.4 i Eng.1E (69kW)	94-96		R		**CF228**		Ø 25,40	Exc. 4WD
	94-96		R		**CF545**		Ø 26,80	3650 mm
2.4 TD Eng.1G (68kW)	88-90		R		**CF228**		Ø 25,40	Exc. 4WD
	88-90		R		**CF545**		Ø 26,80	3650 mm
2.4 TD Eng.ACL (70kW)	92-96		R		**CF228**		Ø 25,40	Exc. 4WD
	92-96		R		**CF545**		Ø 26,80	3650 mm
2.4 TD Eng.DV (75kW)	86-90		R		**CF228**		Ø 25,40	Exc. 4WD
	86-90		R		**CF545**		Ø 26,80	3650 mm
2.7 D Eng.CG (48kW)	75-80		R		**CF228**		Ø 25,40	Exc. 4WD
	75-80		R		**CF545**		Ø 26,80	3650 mm
LT I 40-55 (291-293-512-909) 4/75-6/96								
2.0 Eng.CH (55kW)	75-83		R		**CF228**		Ø 25,40	Exc. 4WD
	75-83		R		**CF545**		Ø 26,80	3650 mm
2.4 D Eng.1S/ ACT (51kW)	90-96		R		**CF228**		Ø 25,40	Exc. 4WD
	90-96		R		**CF545**		Ø 26,80	3650 mm
2.4 D, 4WD Eng.CP/ DW (55kW)	78-90		R		**CF228**		Ø 25,40	Exc. 4WD
	78-90		R		**CF229**		Ø 25,40	4WD
	78-90		R		**CF545**		Ø 26,80	3650 mm
2.4 i Eng.1E (69kW)	94-96		R		**CF228**		Ø 25,40	Exc. 4WD
	94-96		R		**CF545**		Ø 26,80	3650 mm
2.4 TD Eng.1G (68kW)	88-90		R		**CF228**		Ø 25,40	Exc. 4WD
	88-90		R		**CF545**		Ø 26,80	3650 mm
2.4 TD Eng.ACL (70kW)	92-96		R		**CF228**		Ø 25,40	Exc. 4WD
	92-96		R		**CF545**		Ø 26,80	3650 mm
2.4 TD, 4WD Eng.DV (75kW)	78-90		R		**CF228**		Ø 25,40	Exc. 4WD
	78-90		R		**CF229**		Ø 25,40	4WD
	78-90		R		**CF545**		Ø 26,80	3650 mm
2.4, 4WD Eng.DL (66kW)	82-90		R		**CF228**		Ø 25,40	Exc. 4WD
	82-90		R		**CF229**		Ø 25,40	4WD
	82-90		R		**CF545**		Ø 26,80	3650 mm
LT II 28-46 (2DX0AE, FE, 2DM) 5/96-7/06								
2.3 Eng.AGL (105kW)					**PF304**	Bch	Ø 23,81	Ch 2DZX004788-2DZ2011024, +ABS
					PF580	Bch	Ø 25,40	Ch 2DZ2011025-, +ABS
	96-8/01				**PF819**	Bch	Ø 23,81	Ch -2DZ2011024, -ABS
					PF907	Trw	Ø 25,40	Ch 2DZ2011025-, Alu, +ABS
					PF820	Trw	Ø 23,81	Ch 2DZ2011025-, Alu, -ABS
	96-06				**CZ053**	Fte	Ø 22,20	
	5/96-				**PZ075**	Fte	Ø 19,05	
2.5 SDi Eng.AGX (55kW)					**PF304**	Bch	Ø 23,81	Ch 2DZX004788-2DZ2011024, +ABS
					PF580	Bch	Ø 25,40	Ch 2DZ2011025-, +ABS
	96-8/01				**PF819**	Bch	Ø 23,81	Ch -2DZ2011024, -ABS

	Spare Parts	F/R	L/R	FRITECH ref.		DIMENSIONS mm.	NOTE
2.5 SDi Eng.AGX (55kW)				**PF907**	Trw	Ø 25,40	Ch 2DZ2011025-, Alu, +ABS
				PF820	Trw	Ø 23,81	Ch 2DZ2011025-, Alu, -ABS
96-06				**CZ053**	Fte	Ø 22,20	
7/96-				**PZ075**	Fte	Ø 19,05	
2.5 TDi Eng.AHD (75kW)				**PF304**	Bch	Ø 23,81	Ch 2DZX004788-2DZ2011024, +ABS
				PF580	Bch	Ø 25,40	Ch 2DZ2011025-, +ABS
96-99				**PF819**	Bch	Ø 23,81	Ch -2DZ2011024, -ABS
				PF907	Trw	Ø 25,40	Ch 2DZ2011025-, Alu, +ABS
				PF820	Trw	Ø 23,81	Ch 2DZ2011025-, Alu, -ABS
96-99				**CZ053**	Fte	Ø 22,20	
5/96-8/99				**PZ075**	Fte	Ø 19,05	
2.5 TDi Eng.ANJ/ AVR (80kW)				**PF304**	Bch	Ø 23,81	Ch 2DZX004788-2DZ2011024, +ABS
				PF580	Bch	Ø 25,40	Ch 2DZ2011025-, +ABS
96-8/01				**PF819**	Bch	Ø 23,81	Ch -2DZ2011024, -ABS
				PF907	Trw	Ø 25,40	Ch 2DZ2011025-, Alu, +ABS
				PF820	Trw	Ø 23,81	Ch 2DZ2011025-, Alu, -ABS
99-06				**CZ053**	Fte	Ø 22,20	
5/99-				**PZ075**	Fte	Ø 19,05	
2.5 TDi Eng.APA (66kW)				**PF304**	Bch	Ø 23,81	Ch 2DZX004788-2DZ2011024, +ABS
				PF580	Bch	Ø 25,40	Ch 2DZ2011025-, +ABS
99-8/01				**PF819**	Bch	Ø 23,81	Ch -2DZ2011024, -ABS
				PF907	Trw	Ø 25,40	Ch 2DZ2011025-, Alu, +ABS
				PF820	Trw	Ø 23,81	Ch 2DZ2011025-, Alu, -ABS
99-06				**CZ053**	Fte	Ø 22,20	
5/99-				**PZ075**	Fte	Ø 19,05	
2.5 TDi Eng.BBE (61kW)				**PF304**	Bch	Ø 23,81	Ch 2DZX004788-2DZ2011024, +ABS
				PF580	Bch	Ø 25,40	Ch 2DZ2011025-, +ABS
-8/01				**PF819**	Bch	Ø 23,81	Ch -2DZ2011024, -ABS
				PF907	Trw	Ø 25,40	Ch 2DZ2011025-, Alu, +ABS
				PF820	Trw	Ø 23,81	Ch 2DZ2011025-, Alu, -ABS
01-06				**CZ053**	Fte	Ø 22,20	
5/01-				**PZ075**	Fte	Ø 19,05	
2.5 TDi Eng.BBF (70kW)				**PF304**	Bch	Ø 23,81	Ch 2DZX004788-2DZ2011024, +ABS
				PF580	Bch	Ø 25,40	Ch 2DZ2011025-, +ABS
-8/01				**PF819**	Bch	Ø 23,81	Ch -2DZ2011024, -ABS
				PF907	Trw	Ø 25,40	Ch 2DZ2011025-, Alu, +ABS
				PF820	Trw	Ø 23,81	Ch 2DZ2011025-, Alu, -ABS
01-06				**CZ053**	Fte	Ø 22,20	
5/01-				**PZ075**	Fte	Ø 19,05	
2.8 TDi Eng.AGK (92kW)				**PF304**	Bch	Ø 23,81	Ch 2DZX004788-2DZ2011024, +ABS
				PF580	Bch	Ø 25,40	Ch 2DZ2011025-, +ABS
				PF819	Bch	Ø 23,81	Ch -2DZ2011024, -ABS
				PF907	Trw	Ø 25,40	Ch 2DZ2011025-, Alu, +ABS
				PF820	Trw	Ø 23,81	Ch 2DZ2011025-, Alu, -ABS
97-98				**CZ053**	Fte	Ø 22,20	
6/97-12/98				**PZ075**	Fte	Ø 19,05	
2.8 TDi Eng.ATA (96kW)				**PF304**	Bch	Ø 23,81	Ch 2DZX004788-2DZ2011024, +ABS
				PF580	Bch	Ø 25,40	Ch 2DZ2011025-, +ABS
				PF819	Bch	Ø 23,81	Ch -2DZ2011024, -ABS
				PF907	Trw	Ø 25,40	Ch 2DZ2011025-, Alu, +ABS
				PF820	Trw	Ø 23,81	Ch 2DZ2011025-, Alu, -ABS
99-06				**CZ053**	Fte	Ø 22,20	
1/99-				**PZ075**	Fte	Ø 19,05	
2.8 TDi Eng.AUH/ BCQ (116kW)				**PF304**	Bch	Ø 23,81	Ch 2DZX004788-2DZ2011024, +ABS
				PF580	Bch	Ø 25,40	Ch 2DZ2011025-, +ABS
				PF819	Bch	Ø 23,81	Ch -2DZ2011024, -ABS
				PF907	Trw	Ø 25,40	Ch 2DZ2011025-, Alu, +ABS
				PF820	Trw	Ø 23,81	Ch 2DZ2011025-, Alu, -ABS
02-06				**CZ053**	Fte	Ø 22,20	
4/02-				**PZ075**	Fte	Ø 19,05	
Multivan V (7HM) 4/03-3/15							
1.9 TDi Eng.AXB (77kW) 03-				**CZ120**	Fte	Ø 19,05	Alu
1.9 TDi Eng.BRR (62kW) 06-				**CZ120**	Fte	Ø 19,05	Alu

VOLKSWAGEN LCV

		Spare Parts	F/R	L/R	FRITECH ref.		DIMENSIONS mm.	NOTE
1.9 TDi Eng.BRS (75kW)	06-				**CZ120**	Fte	Ø 19,05	Alu
2.0 Eng.AXA (85kW)	03-				**CZ120**	Fte	Ø 19,05	Alu
2.0 TDi Eng.CAAA (62kW)	09-				**CZ120**	Fte	Ø 19,05	Alu
2.0 TDi Eng.CAAB (75kW)	09-				**CZ120**	Fte	Ø 19,05	Alu
Polo Van I (86CF) 1/81-9/94								
1.0 Eng.AAU (33kW)	10/81-		R		**CF001**		Ø 14,29	Ch -F127903, -CF
	-94		R		**CF080**		Ø 15,87	Ch F127904-
	10/81-		R		**CF000**		Ø 17,46	Ch -F127903, +CF
	-94		R		**CF107**		Ø 19,05	Ch F127904-, +CF
	-94		R		**CF121**		Ø 19,05	Ch F127904-, Alu, +CF
	10/81-				**PF058**		Ø 20,64	Ch -F127903, +Servo
	-94				**PF005**		Ø 20,64	Ch F127904-, +Servo
1.3 Eng.AAV (40kW)	10/81-		R		**CF001**		Ø 14,29	Ch -F127903, -CF
	-94		R		**CF080**		Ø 15,87	Ch F127904-
	10/81-		R		**CF000**		Ø 17,46	Ch -F127903, +CF
	-94		R		**CF107**		Ø 19,05	Ch F127904-, +CF
	-94		R		**CF121**		Ø 19,05	Ch F127904-, Alu, +CF
	10/81-				**PF058**		Ø 20,64	Ch -F127903, +Servo
	-94				**PF005**		Ø 20,64	Ch F127904-, +Servo
1.4 D Eng.1W (35kW)	-94		R		**CF080**		Ø 15,87	Ch F127904-, -CF
	-94		R		**CF107**		Ø 19,05	Ch F127904-, +CF
	-94		R		**CF121**		Ø 19,05	Ch F127904-, Alu, +CF
	-94				**PF005**		Ø 20,64	Ch F127904-, +Servo
Polo Van II (6NF) 10/94-10/99								
1.0 Eng.AAU (33kW)	94-		R		**CF000**		Ø 17,46	
	10/94-				**PF310**	Ate	Ø 22,20	Ch -6NT2500000, +ABS
					PF494	Ate	Ø 22,20	Ch 6NZV000001-, Alu, +ABS, LHD
	94-96				**PF041**	Ate	Ø 20,64	-ABS
1.4 Eng.AEX/ AKV/ ANX/ APQ (44kW)	98-		R		**CF000**		Ø 17,46	Exc. Germany
	98-		R		**CF239**		Ø 17,46	Alu
	98-				**PF310**	Ate	Ø 22,20	Ch -6NZT250000, +ABS
					PF494	Ate	Ø 22,20	Ch 6NZV000001-, Alu, +ABS, LHD
	98-				**PF041**	Ate	Ø 20,64	Exc. Germany, -ABS
1.6 Eng.AEA (55kW)	94-95		R		**CF000**		Ø 17,46	
	94-95		R		**CF239**		Ø 17,46	Alu
1.7 SDi Eng.AKU (44kW)	97-99		R		**CF000**		Ø 17,46	
	97-99		R		**CF239**		Ø 17,46	Alu
					PF494	Ate	Ø 22,20	Ch 6NZV000001-, Alu, +ABS, LHD
	97-99				**PF041**	Ate	Ø 20,64	-ABS
1.9 D Eng.AEF (47kW)	94-99		R		**CF000**		Ø 17,46	
	94-99		R		**CF239**		Ø 17,46	Alu
	10/94-				**PF310**	Ate	Ø 22,20	Ch -6NT2500000, +ABS
					PF494	Ate	Ø 22,20	Ch 6NZV000001-, Alu, +ABS, LHD
	94-99				**PF041**	Ate	Ø 20,64	-ABS
1.9 SDi Eng.AGD (47kW)	96-99		R		**CF000**		Ø 17,46	
	96-99		R		**CF239**		Ø 17,46	Alu
	96-				**PF310**	Ate	Ø 22,20	Ch -6NT2500000, +ABS
					PF494	Ate	Ø 22,20	Ch 6NZV000001-, Alu, +ABS, LHD
	96-99				**PF041**	Ate	Ø 20,64	-ABS
Taro 4/89-3/97								
1.8 Eng.2Y (61kW)	89-94		R		**CF290**		Ø 22,20	
2.2, 4WD Eng.4Y (69kW)	89-94		R		**CF510**		Ø 22,20	
Transporter II 8/67-7/79								
1.6 Eng.AD/ AH/ AS (37kW)	72-79		R		**CF172**		Ø 23,81	
	72-79				**PF040**		Ø 23,81	
1.6 Eng.AF (34kW)	67-70		R		**CF172**		Ø 23,81	
	67-70				**PF040**		Ø 23,81	
1.8 Eng.AP (50kW)	73-75		R		**CF172**		Ø 23,81	
	73-75				**PF040**		Ø 23,81	
2.0 Eng.CJ/ GD/ GE (51-52kW)	75-79		R		**CF172**		Ø 23,81	
	75-79				**PF040**		Ø 23,81	
Transporter III 5/79-7/92								
1.6 Eng.CT (37kW)	79-82		R		**CF172**		Ø 23,81	
	79-82				**PF040**		Ø 23,81	

		Spare Parts	F/R	L/R	FRITECH ref.		DIMENSIONS mm.	NOTE
1.6 D Eng.CS (37kW)	81-87		R		**CF172**		Ø 23,81	
	81-87				**PF040**		Ø 23,81	
1.6 TD, Syncro Eng.JX (51kW)	12/84-90		R		**CF172**		Ø 23,81	Syncro
	12/84-90				**PF040**		Ø 23,81	Syncro
1.7 D Eng.KY (42kW)	89-92		R		**CF172**		Ø 23,81	
	89-92				**PF040**		Ø 23,81	
1.9 Eng.DF (44kW)	82-92		R		**CF172**		Ø 23,81	
	82-92				**PF040**		Ø 23,81	
1.9 Eng.DH (61kW)	83-89		R		**CF172**		Ø 23,81	
	83-89				**PF040**		Ø 23,81	
1.9 Eng.GW (66kW)	83-89		R		**CF172**		Ø 23,81	
	83-89				**PF040**		Ø 23,81	
1.9, Syncro Eng.DF/ DG (44-57kW)	82-92		R		**CF172**		Ø 23,81	
	82-92				**PF040**		Ø 23,81	
2.0 Eng.CU/ CV (51kW)	79-86		R		**CF172**		Ø 23,81	
	79-86				**PF040**		Ø 23,81	
2.1 i Eng.SS (68kW)	89-92		R		**CF172**		Ø 23,81	
	89-92				**PF040**		Ø 23,81	
2.1, Syncro Eng.DJ (82kW)	85-92		R		**CF172**		Ø 23,81	
	85-92				**PF040**		Ø 23,81	
2.1, Syncro Eng.MV (70kW)	85-92		R		**CF172**		Ø 23,81	
	85-92				**PF040**		Ø 23,81	
2.1, Syncro Eng.SR (64kW)	86-92		R		**CF172**		Ø 23,81	
	86-92				**PF040**		Ø 23,81	
Transporter IV (70XA/B/C/D, DB, 7DW) 7/90-3/03								
1.8 Eng.PD (49kW)	90-		R		**CF246**		Ø 19,05	Ch -M033887
			R		**CF167**		Ø 20,64	Ch M033888-70T199999
	90-92				**PF434**	Ate	Ø 22,20	Alu, +ABS
	90-92				**PF039**	Luc	Ø 22,20	-ABS
	90-92				**PF248**	Luc	Ø 22,20	Alu, -ABS
	12/90-7/92				**PZ082**	Ate	Ø 19,05	Ch -70V116000
1.9 D Eng.1X (44-45kW)	90-		R		**CF246**		Ø 19,05	Ch -M033887
			R		**CF167**		Ø 20,64	Ch M033888-70T199999
	-03				**PF821**	Ate	Ø 25,40	Ch 70ZY027264-, Alu, Pinza/Caliper ATE, +ABS, +ESP
	90-				**PF434**	Ate	Ø 22,20	Ch -70S127805, Alu, +ABS
	-9/03				**PF253**	Ate	Ø 23,81	Ch 70S127806-, Pinza/Caliper Lucas, +ABS
	-9/03				**PF309**	Ate	Ø 23,81	Ch 70S127806-, Pinza/Caliper Lucas, -ABS, LHD
	5/96-9/03				**PF393**	Ate	Ø 25,40	Alu, Pinza/Caliper ATE, -ABS
	90-				**PF039**	Luc	Ø 22,20	Ch -70S127805, -ABS
	90-				**PF248**	Luc	Ø 22,20	Ch -70S127805, Alu, -ABS
	90-				**PF541**		Ø 25,40	Alu, Pinza/Caliper ATE, +ABS, -ESP
	7/90-				**CZ025**	Ate	Ø 23,81	Alu
	7/90-				**CZ093**	Ate	Ø 23,81	
	7/90-				**CZ076**		Ø 19,05	
	7/90-				**PZ082**	Ate	Ø 19,05	Ch -70V116000
1.9 TD Eng.ABL (50kW)	92-		R		**CF246**		Ø 19,05	Ch -M033887
			R		**CF167**		Ø 20,64	Ch M033888-70T199999
	-03				**PF821**	Ate	Ø 25,40	Ch 70ZY027264-, Alu, Pinza/Caliper ATE, +ABS, +ESP
	92-				**PF434**	Ate	Ø 22,20	Ch -70S127805, Alu, +ABS
	-9/03				**PF253**	Ate	Ø 23,81	Ch 70S127806-, Pinza/Caliper Lucas, +ABS
	-9/03				**PF309**	Ate	Ø 23,81	Ch 70S127806-, Pinza/Caliper Lucas, -ABS, LHD
	5/96-9/03				**PF393**	Ate	Ø 25,40	Alu, Pinza/Caliper ATE, -ABS
	92-				**PF039**	Luc	Ø 22,20	Ch -70S127805, -ABS
	92-				**PF248**	Luc	Ø 22,20	Ch -70S127805, Alu, -ABS
	92-				**PF541**		Ø 25,40	Alu, Pinza/Caliper ATE, +ABS, -ESP
	92-				**CZ025**	Ate	Ø 23,81	Alu
	92-				**CZ093**	Ate	Ø 23,81	
	10/92-				**CZ076**		Ø 19,05	
	10/92-				**PZ082**	Ate	Ø 19,05	Ch -70V116000
2.0 Eng.AAC (62kW)	90-		R		**CF246**		Ø 19,05	Ch -M033887
			R		**CF167**		Ø 20,64	Ch M033888-70T199999

VOLKSWAGEN LCV

		Spare Parts	F/R	L/R	FRITECH ref.		DIMENSIONS mm.	NOTE
2.0 Eng.AAC (62kW)	-03				**PF821**	Ate	Ø 25,40	Ch 70ZY027264-, Alu, Pinza/Caliper ATE, +ABS, +ESP
	90-				**PF434**	Ate	Ø 22,20	Ch -70S127805, Alu, +ABS
	-9/03				**PF253**	Ate	Ø 23,81	Ch 70S127806-, Pinza/Caliper Lucas, +ABS
	-9/03				**PF309**	Ate	Ø 23,81	Ch 70S127806-, Pinza/Caliper Lucas, -ABS, LHD
	5/96-9/03				**PF393**	Ate	Ø 25,40	Alu, Pinza/Caliper ATE, -ABS
	90-				**PF039**	Luc	Ø 22,20	Ch -70S127805, -ABS
	90-				**PF248**	Luc	Ø 22,20	Ch -70S127805, Alu, -ABS
	96-9/03				**PF541**		Ø 25,40	Alu, Pinza/Caliper ATE, +ABS, -ESP
	7/90-				**CZ025**	Ate	Ø 23,81	Alu
	7/90-				**CZ093**	Ate	Ø 23,81	
	9/90-				**CZ076**		Ø 19,05	
	9/90-				**PZ082**	Ate	Ø 19,05	Ch -70V116000
2.4 D Eng.AJA (55kW)	97-		R		**CF246**		Ø 19,05	Ch -M033887
			R		**CF167**		Ø 20,64	Ch M033888-70T199999
	-03				**PF821**	Ate	Ø 25,40	Ch 70ZY027264-, Alu, Pinza/Caliper ATE, +ABS, +ESP
	97-				**PF434**	Ate	Ø 22,20	Ch -70S127805, Alu, +ABS
	-9/03				**PF253**	Ate	Ø 23,81	Ch 70S127806-, Pinza/Caliper Lucas, +ABS
	-9/03				**PF309**	Ate	Ø 23,81	Ch 70S127806-, Pinza/Caliper Lucas, -ABS, LHD
	8/97-9/03				**PF393**	Ate	Ø 25,40	Alu, Pinza/Caliper ATE, -ABS
	97-				**PF039**	Luc	Ø 22,20	Ch -70S127805, -ABS
	97-				**PF248**	Luc	Ø 22,20	Ch -70S127805, Alu, -ABS
	97-				**PF541**		Ø 25,40	Alu, Pinza/Caliper ATE, +ABS, -ESP
	97-				**CZ025**	Ate	Ø 23,81	Alu
	97-				**CZ093**	Ate	Ø 23,81	
	8/97-				**CZ076**		Ø 19,05	
2.4 D, Syncro Eng.AAB (57kW)	90-		R		**CF246**		Ø 19,05	Ch -M033887
			R		**CF167**		Ø 20,64	Ch M033888-70T199999
	-03				**PF821**	Ate	Ø 25,40	Ch 70ZY027264-, Alu, Pinza/Caliper ATE, +ABS, +ESP
	90-				**PF434**	Ate	Ø 22,20	Ch -70S127805, Alu, +ABS
	-9/03				**PF253**	Ate	Ø 23,81	Ch 70S127806-, Pinza/Caliper Lucas, +ABS
	-9/03				**PF309**	Ate	Ø 23,81	Ch 70S127806-, Pinza/Caliper Lucas, -ABS, LHD
	5/96-9/03				**PF393**	Ate	Ø 25,40	Alu, Pinza/Caliper ATE, -ABS
	90-				**PF039**	Luc	Ø 22,20	Ch -70S127805, -ABS
	90-				**PF248**	Luc	Ø 22,20	Ch -70S127805, Alu, -ABS
	90-				**PF541**		Ø 25,40	Alu, Pinza/Caliper ATE, +ABS, -ESP
	7/90-				**CZ025**	Ate	Ø 23,81	Alu
	7/90-				**CZ093**	Ate	Ø 23,81	
	9/90-				**CZ076**		Ø 19,05	
	9/90-				**PZ082**	Ate	Ø 19,05	Ch -70V116000
2.5 Eng.AAF/ ACU (81kW)	90-		R		**CF246**		Ø 19,05	Ch -M033887
			R		**CF167**		Ø 20,64	Ch M033888-70T199999
	-03				**PF821**	Ate	Ø 25,40	Ch 70ZY027264-, Alu, Pinza/Caliper ATE, +ABS, +ESP
	90-				**PF434**	Ate	Ø 22,20	Ch -70S127805, Alu, +ABS
	-9/03				**PF253**	Ate	Ø 23,81	Ch 70S127806-, Pinza/Caliper Lucas, +ABS
	-9/03				**PF309**	Ate	Ø 23,81	Ch 70S127806-, Pinza/Caliper Lucas, -ABS, LHD
	5/96-9/03				**PF393**	Ate	Ø 25,40	Alu, Pinza/Caliper ATE, -ABS
	90-				**PF039**	Luc	Ø 22,20	Ch -70S127805, -ABS
	90-				**PF248**	Luc	Ø 22,20	Ch -70S127805, Alu, -ABS
	11/92-				**PF541**		Ø 25,40	Alu, Pinza/Caliper ATE, +ABS, -ESP
	11/90-				**CZ025**	Ate	Ø 23,81	Alu
	11/90-				**CZ093**	Ate	Ø 23,81	
	11/90-				**CZ076**		Ø 19,05	
	11/90-				**PZ082**	Ate	Ø 19,05	Ch -70V116000
2.5 Eng.AEN/ AEU (81kW)	90-		R		**CF246**		Ø 19,05	Ch -M033887
			R		**CF167**		Ø 20,64	Ch M033888-70T199999
	-03				**PF821**	Ate	Ø 25,40	Ch 70ZY027264-, Alu, Pinza/Caliper ATE, +ABS, +ESP
	90-				**PF434**	Ate	Ø 22,20	Ch -70S127805, Alu, +ABS
	-9/03				**PF253**	Ate	Ø 23,81	Ch 70S127806-, Pinza/Caliper Lucas, +ABS
	-9/03				**PF309**	Ate	Ø 23,81	Ch 70S127806-, Pinza/Caliper Lucas, -ABS, LHD

		Spare Parts	F/R	L/R	FRITECH ref.		DIMENSIONS mm.	NOTE
2.5 Eng.AEN/ AEU (81kW)	5/96-9/03				**PF393**	Ate	Ø 25,40	Alu, Pinza/Caliper ATE, -ABS
	90-				**PF039**	Luc	Ø 22,20	Ch -70S127805, -ABS
	90-				**PF248**	Luc	Ø 22,20	Ch -70S127805, Alu, -ABS
	11/92-				**PF541**		Ø 25,40	Alu, Pinza/Caliper ATE, +ABS, -ESP
	11/90-				**CZ025**	Ate	Ø 23,81	Alu
	11/90-				**CZ093**	Ate	Ø 23,81	
	11/90-				**CZ076**		Ø 19,05	
	11/90-				**PZ082**	Ate	Ø 19,05	Ch -70V116000
2.5 Eng.AET/ APL/ AVT (85kW)	-03				**PF821**	Ate	Ø 25,40	Ch 70ZY027264-, Alu, Pinza/Caliper ATE, +ABS, +ESP
	96-				**PF434**	Ate	Ø 22,20	Ch -70S127805, Alu, +ABS
	-9/03				**PF309**	Ate	Ø 23,81	Ch 70S127806-, Pinza/Caliper Lucas, -ABS, LHD
	7/96-9/03				**PF393**	Ate	Ø 25,40	Alu, Pinza/Caliper ATE, -ABS
	7/96-				**PF541**		Ø 25,40	Alu, Pinza/Caliper ATE, +ABS, -ESP
	7/96-				**CZ025**	Ate	Ø 23,81	Alu
	7/96-				**CZ093**	Ate	Ø 23,81	
	7/96-				**CZ076**		Ø 19,05	
	7/96-				**PZ082**	Ate	Ø 19,05	Ch -70V116000
2.5 Syncro Eng.AAF/ ACU (81kW)	90-		R		**CF246**		Ø 19,05	
			R		**CF167**		Ø 20,64	
	-03				**PF821**	Ate	Ø 25,40	Ch 70ZY027264-, Alu, Pinza/Caliper ATE, +ABS, +ESP
	90-				**PF434**	Ate	Ø 22,20	Alu, +ABS
	-9/03				**PF253**	Ate	Ø 23,81	Pinza/Caliper Lucas, +ABS
	-9/03				**PF309**	Ate	Ø 23,81	Pinza/Caliper Lucas, -ABS, LHD
	5/96-9/03				**PF393**	Ate	Ø 25,40	Alu, Pinza/Caliper ATE, -ABS
	90-				**PF039**	Luc	Ø 22,20	-ABS
	90-				**PF248**	Luc	Ø 22,20	Alu, -ABS
	11/92-				**PF541**		Ø 25,40	Alu, Pinza/Caliper ATE, +ABS, -ESP
	11/90-				**CZ025**	Ate	Ø 23,81	Alu
	11/90-				**CZ093**	Ate	Ø 23,81	
	11/90-				**CZ076**		Ø 19,05	
	11/90-				**PZ082**	Ate	Ø 19,05	Ch -70V116000
2.5 Syncro Eng.AEN/ AEU (81kW)	90-		R		**CF246**		Ø 19,05	
			R		**CF167**		Ø 20,64	
	-03				**PF821**	Ate	Ø 25,40	Ch 70ZY027264-, Alu, Pinza/Caliper ATE, +ABS, +ESP
	90-				**PF434**	Ate	Ø 22,20	Alu, +ABS
	-9/03				**PF253**	Ate	Ø 23,81	Pinza/Caliper Lucas, +ABS
	-9/03				**PF309**	Ate	Ø 23,81	Pinza/Caliper Lucas, -ABS, LHD
	5/96-9/03				**PF393**	Ate	Ø 25,40	Alu, Pinza/Caliper ATE, -ABS
	90-				**PF039**	Luc	Ø 22,20	-ABS
	90-				**PF248**	Luc	Ø 22,20	Alu, -ABS
	11/92-				**PF541**		Ø 25,40	Alu, Pinza/Caliper ATE, +ABS, -ESP
	11/90-				**CZ025**	Ate	Ø 23,81	Alu
	11/90-				**CZ093**	Ate	Ø 23,81	
	11/90-				**CZ076**		Ø 19,05	
	11/90-				**PZ082**	Ate	Ø 19,05	Ch -70V116000
2.5 Syncro Eng.AET/ APL/ AVT (85kW)	-03				**PF821**	Ate	Ø 25,40	Ch 70ZY027264-, Alu, Pinza/Caliper ATE, +ABS, +ESP
	96-				**PF434**	Ate	Ø 22,20	Alu, +ABS
	-9/03				**PF309**	Ate	Ø 23,81	Pinza/Caliper Lucas, -ABS, LHD
	7/96-9/03				**PF393**	Ate	Ø 25,40	Alu, Pinza/Caliper ATE, -ABS
	7/96-				**PF541**		Ø 25,40	Alu, Pinza/Caliper ATE, +ABS, -ESP
	7/96-				**CZ025**	Ate	Ø 23,81	Alu
	7/96-				**CZ093**	Ate	Ø 23,81	
	7/96-				**CZ076**		Ø 19,05	
	7/96-				**PZ082**	Ate	Ø 19,05	Ch -70V116000
2.5 TDi Eng.ACV/ AUF/ AYC (75kW)	95-		R		**CF246**		Ø 19,05	
	-03				**PF821**	Ate	Ø 25,40	Ch 70ZY027264-, Alu, Pinza/Caliper ATE, +ABS, +ESP
	-9/03				**PF253**	Ate	Ø 23,81	Pinza/Caliper Lucas, +ABS
	95-9/03				**PF309**	Ate	Ø 23,81	Pinza/Caliper Lucas, -ABS, LHD
	5/96-9/03				**PF393**	Ate	Ø 25,40	Alu, Pinza/Caliper ATE, -ABS

VOLKSWAGEN LCV

		Spare Parts	F/R	L/R	FRITECH ref.		DIMENSIONS mm.	NOTE
2.5 TDi Eng.ACV/ AUF/ AYC (75kW)	95-				**PF541**		Ø 25,40	Alu, Pinza/Caliper ATE, +ABS, -ESP
	95-				**CZ025**	Ate	Ø 23,81	Alu
	95-				**CZ093**	Ate	Ø 23,81	
	95-				**PZ149**	Fte	Ø 15,87	
2.5 TDi Eng.AHY/ AXG (111kW)	98-		R		**CF246**		Ø 19,05	Ch -M033887
	-03				**PF821**	Ate	Ø 25,40	Ch 70ZY027264-, Alu, Pinza/Caliper ATE, +ABS, +ESP
	5/98-9/03				**PF393**	Ate	Ø 25,40	Alu, Pinza/Caliper ATE, -ABS
	98-				**PF541**		Ø 25,40	Alu, Pinza/Caliper ATE, +ABS, -ESP
	98-				**PZ149**	Fte	Ø 15,87	
2.5 TDi Eng.AJT/ AYY (65kW)	98-		R		**CF246**		Ø 19,05	Ch -M033887
	-03				**PF821**	Ate	Ø 25,40	Ch 70ZY027264-, Alu, Pinza/Caliper ATE, +ABS, +ESP
	-9/03				**PF253**	Ate	Ø 23,81	Ch 70S127806-, Pinza/Caliper Lucas, +ABS
	98-9/03				**PF309**	Ate	Ø 23,81	Pinza/Caliper Lucas, -ABS, LHD
	5/98-9/03				**PF393**	Ate	Ø 25,40	Alu, Pinza/Caliper ATE, -ABS
	98-				**PF541**		Ø 25,40	Alu, Pinza/Caliper ATE, +ABS, -ESP
	98-				**CZ025**	Ate	Ø 23,81	Alu
	98-				**CZ093**	Ate	Ø 23,81	
	5/98-				**CZ076**		Ø 19,05	
	98-				**PZ149**	Fte	Ø 15,87	
2.5 TDi Syncro Eng.ACV/ AXL (75kW)	95-		R		**CF246**		Ø 19,05	Ch -M033887
	-03				**PF821**	Ate	Ø 25,40	Ch 70ZY027264-, Alu, Pinza/Caliper ATE, +ABS, +ESP
	-9/03				**PF253**	Ate	Ø 23,81	Ch 70S127806-, Pinza/Caliper Lucas, +ABS
	9/95-9/03				**PF309**	Ate	Ø 23,81	Pinza/Caliper Lucas, -ABS, LHD
	5/96-9/03				**PF393**	Ate	Ø 25,40	Alu, Pinza/Caliper ATE, -ABS
	95-				**PF541**		Ø 25,40	Alu, Pinza/Caliper ATE, +ABS, -ESP
	9/95-				**CZ025**	Ate	Ø 23,81	Alu
	9/95-				**CZ093**	Ate	Ø 23,81	
	95-				**PZ149**	Fte	Ø 15,87	
2.8 V6 Eng.AMV (150kW)	00-				**PF541**		Ø 25,40	Alu, Pinza/Caliper ATE, +ABS, -ESP
	00-				**PZ149**	Fte	Ø 15,87	
2.8 VR6 Eng.AES (103kW)	-00				**PF821**	Ate	Ø 25,40	Ch 70ZY027264-, Alu, Pinza/Caliper ATE, +ABS, +ESP
	-00				**PF253**	Ate	Ø 23,81	Ch 70S127806-, Pinza/Caliper Lucas, +ABS
	95-00				**PF309**	Ate	Ø 23,81	Pinza/Caliper Lucas, -ABS, LHD
	5/96-00				**PF393**	Ate	Ø 25,40	Alu, Pinza/Caliper ATE, -ABS
	95-00				**PF541**		Ø 25,40	Alu, Pinza/Caliper ATE, +ABS, -ESP
Transporter V (7HA/B/H/J, JD/E/L) 4/03-3/15								
1.9 TDi Eng.AXB (77kW)	03-				**CZ120**	Fte	Ø 19,05	Alu
1.9 TDi Eng.AXC (63kW)	03-				**CZ120**	Fte	Ø 19,05	Alu
1.9 TDi Eng.BRR (62kW)	06-				**CZ120**	Fte	Ø 19,05	Alu
1.9 TDi Eng.BRS (75kW)	06-				**CZ120**	Fte	Ø 19,05	Alu
2.0 Eng.AXA (85kW)	03-				**CZ120**	Fte	Ø 19,05	Alu
2.0 TDi Eng.CAAA (62kW)	09-				**CZ120**	Fte	Ø 19,05	Alu
2.0 TDi Eng.CAAB (75kW)	09-				**CZ120**	Fte	Ø 19,05	Alu
Vanagon 1/72-1/87								
All models	72-87		R		**CF172**		Ø 23,81	

VOLVO

140 (142, 144, 145), SW 8/66-8/75								
1.8 S Eng.B18B (74kW)	67-72				**PF071**		Ø 22,20	
2.0 Eng.B20A (60kW)	68-74				**PF071**		Ø 22,20	
240 (P242, 244, 245), SW 8/74-8/93								
2.0 Eng.B19A/ K (66-70-71kW)	76-83				**PF064**		Ø 22,30	
	76-83				**PF063**		Ø 22,30/15,75	
2.0 Eng.B200K (75-76-77kW)	84-85				**PF064**		Ø 22,30	
	84-85				**PF063**		Ø 22,30/15,75	
2.0 Eng.B20A (60kW)	8/74-76				**PF064**		Ø 22,30	
	8/74-76				**PF063**		Ø 22,30/15,75	
	74-				**CZ051**	Fte	Ø 22,20	
2.1 Eng.B21A (71-74-79kW)	74-84				**PF064**		Ø 22,30	
	74-84				**PF063**		Ø 22,30/15,75	

		Spare Parts	F/R	L/R	FRITECH ref.		DIMENSIONS mm.	NOTE
2.1 Eng.B21E (90kW)	74-				**CZ051**	Fte	Ø 22,20	
2.1 T. Eng.B21ET (114kW)	80-84				**PF064**		Ø 22,30	
	80-84				**PF063**		Ø 22,30/15,75	
2.3 Eng.B230K (85-86kW)	86-88				**PF064**		Ø 22,30	
	86-88				**PF063**		Ø 22,30/15,75	
2.3 Eng.B23E (95-98-100kW)	80-89				**PF064**		Ø 22,30	
	80-89				**PF063**		Ø 22,30/15,75	
2.3 (Exc. SW) Eng.B23E (103kW)	78-80				**PF064**		Ø 22,30	
	78-80				**PF063**		Ø 22,30/15,75	
2.3 16v Eng.B230F (83-85kW)	86-93				**PF064**		Ø 22,30	
	86-93				**PF063**		Ø 22,30/15,75	
2.4 D Eng.D24 (58-60kW)	8/74-8/91				**PF064**		Ø 22,30	
	8/74-8/91				**PF063**		Ø 22,30/15,75	
260 (P262, 264, 265), SW 8/74-7/82								
2.7 Eng.B27A (92kW)	76-82				**PF064**		Ø 22,30	
	76-82				**PF063**		Ø 22,30/15,75	
2.7 Eng.B27F (109kW)	78-82				**PF064**		Ø 22,30	
	78-82				**PF063**		Ø 22,30/15,75	
2.7, Coupe Eng.B27E (104kW)	74-80				**PF064**		Ø 22,30	
	74-80				**PF063**		Ø 22,30/15,75	
340-360 (343, 345, 344) 8/75-7/91								
1.4 Eng.B14.3E (46-47kW)	79-85		R		**CF196**		Ø 19,05	
	79-85		R		**CF123**		Ø 20,64	Only 343
1.4 Eng.B14.4S (50-51-52kW)	75-88		R		**CF196**		Ø 19,05	
	75-88		R		**CF123**		Ø 20,64	Only 343
1.6 D Eng.D16 (40kW)	84-91		R		**CF196**		Ø 19,05	
1.7 Eng.B172K (59-60-67kW)	85-91		R		**CF196**		Ø 19,05	
2.0 Eng.B19A (65-66-68-70kW)	80-84		R		**CF123**		Ø 20,64	
2.0 Eng.B200F/ EA (80-81-82kW)	88-89		R		**CF123**		Ø 20,64	
2.0 Eng.B200K (75-77kW)	84-87		R		**CF123**		Ø 20,64	
440 K (445) 8/88-12/96								
1.6 Eng.B16/ A/ B/ F (44-61kW)	9/94-3/96		R	L	**CF164**		Ø 20,64	
	9/94-3/96		R	R	**CF165**		Ø 20,64	
	9/94-3/96				**PF174**		Ø 20,64	Alu, -ABS
1.7 Eng.B18EP (75-78kW)	8/88-12/92		R	L	**CF164**		Ø 20,64	
	8/88-12/92		R	R	**CF165**		Ø 20,64	
	8/88-12/92				**PF174**		Ø 20,64	Alu, -ABS
1.7 Eng.B18F (70kW)	88-89		R	L	**CF164**		Ø 20,64	
	88-89		R	R	**CF165**		Ø 20,64	
	88-89				**PF174**		Ø 20,64	Alu, -ABS
1.7 Eng.B18FP (75kW)	89-12/92		R	L	**CF164**		Ø 20,64	
	89-12/92		R	R	**CF165**		Ø 20,64	
	89-12/92				**PF174**		Ø 20,64	Alu, -ABS
1.7 Eng.B18K/ KP (64kW)	88-90		R	L	**CF164**		Ø 20,64	
	88-90		R	R	**CF165**		Ø 20,64	
	88-96				**PF174**		Ø 20,64	Alu, -ABS
1.7 T. Eng.B18FT (88-90kW)	9/94-3/96		R	L	**CF164**		Ø 20,64	
	9/94-3/96		R	R	**CF165**		Ø 20,64	
	8/88-3/96				**PF174**		Ø 20,64	Alu, -ABS
1.8 Eng.B18U (66kW)	7/91-96		R	L	**CF164**		Ø 20,64	
	7/91-96		R	R	**CF165**		Ø 20,64	
	7/91-96				**PF174**		Ø 20,64	Alu, -ABS
1.9 TD Eng.D19T (66kW)	94-96		R	L	**CF164**		Ø 20,64	
	94-96		R	R	**CF165**		Ø 20,64	
	94-96				**PF174**		Ø 20,64	Alu, -ABS
2.0 Eng.B20F (80-81kW)	92-96		R	L	**CF164**		Ø 20,64	
	92-96		R	R	**CF165**		Ø 20,64	
	92-96				**PF174**		Ø 20,64	Alu, -ABS
460 L (464) 9/88-7/96								
1.6 Eng.B16/ A/ B/ F (44-61kW)	9/94-3/96		R	L	**CF164**		Ø 20,64	
	9/94-3/96		R	R	**CF165**		Ø 20,64	
	9/94-3/96				**PF174**		Ø 20,64	Alu, -ABS
1.7 Eng.B18EP (70-75-78kW)	89-92		R	L	**CF164**		Ø 20,64	
	89-92		R	R	**CF165**		Ø 20,64	

VOLVO

		Spare Parts	F/R	L/R	FRITECH ref.		DIMENSIONS mm.	NOTE
1.7 Eng.B18EP (70-75-78kW)	89-92				**PF174**		Ø 20,64	Alu, -ABS
1.7 T. Eng.B18FT (88kW)	9/94-3/96		R	L	**CF164**		Ø 20,64	
	9/94-3/96		R	R	**CF165**		Ø 20,64	
	89-96				**PF174**		Ø 20,64	Alu, -ABS
1.7 T. Eng.B18FT (90kW)	9/94-3/96		R	L	**CF164**		Ø 20,64	
	9/94-3/96		R	R	**CF165**		Ø 20,64	
	91-96				**PF174**		Ø 20,64	Alu, -ABS
1.8 Eng.B18U (66kW)	91-96		R	L	**CF164**		Ø 20,64	
	91-96		R	R	**CF165**		Ø 20,64	
	91-96				**PF174**		Ø 20,64	Alu, -ABS
1.9 TD Eng.D19T (66kW)	94-96		R	L	**CF164**		Ø 20,64	
	94-96		R	R	**CF165**		Ø 20,64	
	94-96				**PF174**		Ø 20,64	Alu, -ABS
2.0 Eng.B20F (80-81kW)	92-96		R	L	**CF164**		Ø 20,64	
	92-96		R	R	**CF165**		Ø 20,64	
	92-96				**PF174**		Ø 20,64	Alu, -ABS
480 E 4/86-7/96								
1.7 Eng.B18E (78-80kW)	86-89				**PF174**		Ø 20,64	Alu, -ABS
1.7 Eng.B18EP (75kW)	89-96				**PF174**		Ø 20,64	Alu, -ABS
1.7 Eng.B18F (70kW)	87-89				**PF174**		Ø 20,64	Alu, -ABS
1.7 T. Eng.B18FT (88-90kW)	87-96				**PF174**		Ø 20,64	Alu, -ABS
2.0 Eng.B20F (80-81kW)	92-95				**PF174**		Ø 20,64	Alu, -ABS
66, SW 10/75-11/79								
1.1 DL Eng.B11 (33kW)	75-78		R		**CF076**		Ø 20,64	
1.3 GL Eng.B130 (42kW)	75-78		R		**CF076**		Ø 20,64	
740 (744, 745) 8/83-8/92								
2.0 Eng.B200E (86kW)	87-88				**PF124**	Luc	Ø 19,05	+ABS
2.0 Eng.B200G (89kW)	85-90				**PF124**	Luc	Ø 19,05	+ABS
2.0 Eng.B200K (76kW)	88-90				**PF124**	Luc	Ø 19,05	+ABS
2.3 Eng.B230A (82kW)	85-86				**PF124**	Luc	Ø 19,05	+ABS
2.3 Eng.B230E (96kW)	84-8/90				**PF124**	Luc	Ø 19,05	+ABS
	84-				**CZ051**	Fte	Ø 22,20	
2.3 Eng.B234F (111-114-117kW)	87-90				**PF124**	Luc	Ø 19,05	+ABS
2.3 Eng.B23A (82kW)	84-				**CZ051**	Fte	Ø 22,20	
2.3 16v Eng.B230F (83-85kW)	85-90				**PF124**	Luc	Ø 19,05	+ABS
2.3 T. Eng.B230FT (115-121-126kW)	86-89				**PF124**	Luc	Ø 19,05	+ABS
2.4 TD Eng.D24T (80-83kW)	84-90				**PF124**	Luc	Ø 19,05	+ABS
740 (744, 745) SW 8/84-8/92								
2.0 Eng.B200E (86kW)	88-12/91				**PF172**	Ate	Ø 22,20/19,05	+ABS
2.0 Eng.B200F (80-81-82kW)	88-12/91				**PF172**	Ate	Ø 22,20/19,05	+ABS
2.0 Eng.B200G (89kW)	88-12/91				**PF172**	Ate	Ø 22,20/19,05	+ABS
2.3 Eng.B230E (96kW)	84-88				**PF172**	Ate	Ø 22,20/19,05	+ABS
2.3 Eng.B234F (111-114-117kW)	87-90				**PF172**	Ate	Ø 22,20/19,05	+ABS
2.3 T. Eng.B230FT (115-125kW)	86-89				**PF172**	Ate	Ø 22,20/19,05	+ABS
2.4 D Eng.D24 (60kW)	84-90				**PF172**	Ate	Ø 22,20/19,05	+ABS
2.4 TD Eng.D24T (80-83kW)	9/85-90				**PF172**	Ate	Ø 22,20/19,05	+ABS
2.4 TDi Eng.D24TIC (85-90kW)	86-88				**PF172**	Ate	Ø 22,20/19,05	+ABS
760 (704, 764, 765) 8/81-7/92								
2.0 T. Eng.B204FT/ GT (140-147kW)	86-89				**PF124**	Luc	Ø 19,05	+ABS
2.3 T. Eng.B230ET (130-134kW)	84-85				**PF172**	Ate	Ø 22,20/19,05	+ABS
	84-90				**PF124**	Luc	Ø 19,05	+ABS
2.3 T. Eng.B23ET (127kW)	83-84				**PF172**	Ate	Ø 22,20/19,05	+ABS
	83-84				**PF124**	Luc	Ø 19,05	+ABS
2.4 D Eng.D24 (60kW)	86-90				**PF124**	Luc	Ø 19,05	
2.4 TD Eng.D24T (80-83kW)	87-90				**PF124**	Luc	Ø 19,05	
2.4 TDi Eng.D24TIC (85-90kW)	87-90				**PF124**	Luc	Ø 19,05	
2.8 Eng.B28E/ B280E (115-122-125kW)	82-88				**PF124**	Luc	Ø 19,05	
760 (704, 764, 765) SW 8/81-7/92								
2.3 16v Eng.B230F (83-85kW)	86-92				**PF172**	Ate	Ø 22,20/19,05	+ABS
2.3 16v Eng.B230FB (96-110kW)	86-92				**PF172**	Ate	Ø 22,20/19,05	+ABS
2.3 T. Eng.B230ET (134kW)	84-90				**PF172**	Ate	Ø 22,20/19,05	+ABS
2.4 D Eng.D24 (60kW)	82-92				**PF172**	Ate	Ø 22,20/19,05	+ABS
2.4 TD Eng.D24T (80-83kW)	87-92				**PF172**	Ate	Ø 22,20/19,05	+ABS

		Spare Parts	F/R	L/R	FRITECH ref.		DIMENSIONS mm.	NOTE
2.4 TDi Eng.D24TIC (85-90kW)	87-92				**PF172**	Ate	Ø 22,20/19,05	+ABS
2.8 Eng.B280F (105-108kW)	86-91				**PF172**	Ate	Ø 22,20/19,05	+ABS
2.8 Eng.B28A (95kW)	86-87				**PF172**	Ate	Ø 22,20/19,05	+ABS
2.8 Eng.B28E/ B280E (115kW)	81-88				**PF172**	Ate	Ø 22,20/19,05	+ABS
850 (LS, LW), SW 6/91-12/96								
2.0 Eng.B5202S (93kW)	94-				**PF595**		Ø 23,81/20,64	Alu, +ABS, -ASR
	94-				**PF596**		Ø 23,81/20,64	Alu, +ABS, +ASR
	94-				**CZ051**	Fte	Ø 22,20	
	94-96				**CZ085**	Fte	Ø 22,20	Alu
2.0 20v Eng.B5204F (105kW)	91-				**PF595**		Ø 23,81/20,64	Alu, +ABS, -ASR
	91-				**PF596**		Ø 23,81/20,64	Alu, +ABS, +ASR
	91-				**CZ051**	Fte	Ø 22,20	
	91-96				**CZ085**	Fte	Ø 22,20	Alu
2.0 T. Eng.B5204T/ FT (155kW)	93-				**PF595**		Ø 23,81/20,64	Alu, +ABS, -ASR
	93-				**PF596**		Ø 23,81/20,64	Alu, +ABS, +ASR
	93-				**CZ051**	Fte	Ø 22,20	
	93-96				**CZ085**	Fte	Ø 22,20	Alu
2.3 T5 Eng.B5234FT (166kW)	93-				**PF595**		Ø 23,81/20,64	Alu, +ABS, -ASR
	93-				**PF596**		Ø 23,81/20,64	Alu, +ABS, +ASR
	93-				**CZ051**	Fte	Ø 22,20	
	93-96				**CZ085**	Fte	Ø 22,20	Alu
2.3 T5-R Eng.B5234T4 (184kW)	9/95-				**PF595**		Ø 23,81/20,64	Alu, +ABS, -ASR
	9/95-				**PF596**		Ø 23,81/20,64	Alu, +ABS, +ASR
	95-				**CZ051**	Fte	Ø 22,20	
2.4 AWD Eng.B5254T (142kW)	96-12/96				**PF595**		Ø 23,81/20,64	Alu, +ABS, -ASR
	96-12/96				**PF596**		Ø 23,81/20,64	Alu, +ABS, +ASR
	96-				**CZ051**	Fte	Ø 22,20	
2.5 Eng.B5252 (103kW)	91-				**CZ051**	Fte	Ø 22,20	
	91-94				**CZ085**	Fte	Ø 22,20	Alu
2.5 Eng.B5252S (106kW)	94-96				**PF595**		Ø 23,81/20,64	Alu, +ABS, -ASR
	94-96				**PF596**		Ø 23,81/20,64	Alu, +ABS, +ASR
	94-				**CZ051**	Fte	Ø 22,20	
	94-96				**CZ085**	Fte	Ø 22,20	Alu
2.5 Eng.B5254S (125kW)	92-				**PF595**		Ø 23,81/20,64	Alu, +ABS, -ASR
	92-				**PF596**		Ø 23,81/20,64	Alu, +ABS, +ASR
	92-				**CZ051**	Fte	Ø 22,20	
	92-96				**CZ085**	Fte	Ø 22,20	Alu
2.5 TDi Eng.D5252T (103kW)	9/95-				**PF595**		Ø 23,81/20,64	Alu, +ABS, -ASR
	9/95-				**PF596**		Ø 23,81/20,64	Alu, +ABS, +ASR
	95-				**CZ051**	Fte	Ø 22,20	
	95-96				**CZ085**	Fte	Ø 22,20	Alu
940 I (944, 945), SW 8/90-7/95								
2.0 Eng.B200E/ F/ G (80-81-82-89kW)	92-				**CZ051**	Fte	Ø 22,20	Exc. SW
2.3 Eng.B234F (111-114-118kW)	90-12/91				**PF124**	Luc	Ø 19,05	+ABS
2.3 16v Eng.B230FB/ G (96-100kW)	90-12/91				**PF124**	Luc	Ø 19,05	+ABS
	90-				**CZ051**	Fte	Ø 22,20	Exc. SW
2.3 T. Eng.B230FT (115-121-126kW)	90-12/91				**PF124**	Luc	Ø 19,05	+ABS
2.4 D Eng.D24 (60kW)	90-12/91				**PF124**	Luc	Ø 19,05	+ABS
2.4 TD Eng.D24T (80-83kW)	90-91				**PF124**	Luc	Ø 19,05	+ABS
	90-				**CZ051**	Fte	Ø 22,20	Only SW
2.4 TDi Eng.D24TIC (85-90kW)	90-12/91				**PF124**	Luc	Ø 19,05	+ABS
	90-				**CZ051**	Fte	Ø 22,20	Only SW
940 II (944, 945), SW 8/94-10/98								
2.4 TDi Eng.D24TIC (85-90kW)	94-				**CZ051**	Fte	Ø 22,20	Exc. SW
960 I (964, 965), SW 8/90-7/94								
2.4 TDi Eng.D24TIC (85-90kW)	9/91-12/91				**PF124**	Luc	Ø 19,05	
2.9 Eng.B6304F/ S (150kW)	8/90-12/91				**PF124**	Luc	Ø 19,05	
960 II (964, 965), SW 7/94-12/96								
2.5 Eng.B6254S (125kW)	96-				**CZ051**	Fte	Ø 22,20	Exc. SW
C70 I Coupe, Cabrio 3/97-2/06								
2.0 T. Eng.B5204T3 (166kW)	1/99-				**PF644**		Ø 23,81	Alu, +ABS, -TC
	-12/98				**PF595**		Ø 23,81/20,64	Alu, +ABS, -ASR
	-12/98				**PF596**		Ø 23,81/20,64	Alu, +ABS, +ASR

VOLVO

		Spare Parts	F/R	L/R	FRITECH ref.		DIMENSIONS mm.	NOTE
2.0 T. Eng.B5204T4 (120kW)	00-02				**PF644**		Ø 23,81	Alu, +ABS, -TC
2.0 T. Cabrio Eng.B5204T2 (132kW)	1/99-				**PF644**		Ø 23,81	Alu, +ABS, -TC
	-12/98				**PF595**		Ø 23,81/20,64	Alu, +ABS, -ASR
	-12/98				**PF596**		Ø 23,81/20,64	Alu, +ABS, +ASR
2.3 T5 Eng.B5234T3 (176kW)	1/99-				**PF644**		Ø 23,81	Alu, +ABS, -TC
	-12/98				**PF595**		Ø 23,81/20,64	Alu, +ABS, -ASR
	-12/98				**PF596**		Ø 23,81/20,64	Alu, +ABS, +ASR
2.3 T5 Cabrio Eng.B5234T9 (180kW)	02-				**PF644**		Ø 23,81	Alu, +ABS, -TC
2.4 T Cabrio Eng.B5244T7 (147kW)	02-				**PF644**		Ø 23,81	Alu, +ABS, -TC
2.4 T. Eng.B5254T (142kW)	1/99-				**PF644**		Ø 23,81	Alu, +ABS, -TC
	-12/98				**PF595**		Ø 23,81/20,64	Alu, +ABS, -ASR
	-12/98				**PF596**		Ø 23,81/20,64	Alu, +ABS, +ASR
2.5 Coupe Eng.B5254S (121kW)	99-02				**PF644**		Ø 23,81	Alu, +ABS, -TC
2.5, Cabrio Eng.B5254S (125kW)	99-02				**PF644**		Ø 23,81	Alu, +ABS, -TC
P 121 5/59-5/71								
1.6 Eng.B16A (44-61kW)	9/61-66		R		**CF198**		Ø 25,40	
1.8 Eng.B18 (55-59-63-76kW)	67-68		R		**CF198**		Ø 25,40	
1.8 Eng.B18A (50-55kW)	9/61-66		R		**CF198**		Ø 25,40	
P 122 S Amazon 5/59-5/71								
1.6 Eng.B16/ A/ B/ F (61kW)	64-66		R		**CF198**		Ø 25,40	
1.8 Eng.B18 (76kW)	-8/68		R		**CF265**		Ø 22,20	Ch 225050-
	66-		R		**CF198**		Ø 25,40	Ch -225049
1.8, SW Eng.B18 (55-59kW)	64-65		R		**CF198**		Ø 25,40	
P 123 11/68-5/71								
GT	68-71		R		**CF265**		Ø 22,20	
P 131 11/64-5/71								
All models	-8/68		R		**CF265**		Ø 22,20	Ch 279900-
	9/68-7/70		R		**CF364**		Ø 22,20	
	6/64-		R		**CF198**		Ø 25,40	Ch -279899
P 132 S 11/64-5/71								
All models	-68		R		**CF265**		Ø 22,20	Ch 216950-
	64-		R		**CF198**		Ø 25,40	Ch -216949
P 133 11/64-5/71								
All models	64-8/68		R		**CF265**		Ø 22,20	
	9/68-7/70		R		**CF364**		Ø 22,20	
P 1800 (182) 4/62-11/73								
1.8 (66kW)	68-		R		**CF364**		Ø 22,20	Ch -30000
1.8 (76kW)	68-		R		**CF364**		Ø 22,20	Ch -30000
1.8 S (71kW)	68-		R		**CF364**		Ø 22,20	Ch -30000
P 1800 (183) 4/62-11/73								
1.8 (66kW)	62-68		R		**CF265**		Ø 22,20	
1.8 (76kW)	62-68		R		**CF265**		Ø 22,20	
1.8 S (71kW)	62-68		R		**CF265**		Ø 22,20	
P 2200 SW 9/64-8/70								
1.8 (50kW)	9/68-7/70		R		**CF364**		Ø 22,20	
	6/64-8/68		R		**CF198**		Ø 25,40	
1.8 (59kW)	9/68-7/70		R		**CF364**		Ø 22,20	
	6/64-8/68		R		**CF198**		Ø 25,40	
1.8 (63kW)	9/68-7/70		R		**CF364**		Ø 22,20	
	6/64-8/68		R		**CF198**		Ø 25,40	
S40 I / V40 (VW, VS) 7/95-1/04								
1.6 Eng.B4164S (77kW)	9/95-7/97				**PF260**	Bch	Ø 22,20	Alu
	8/97-99				**PF551**		Ø 23,81	Alu
1.6 Eng.B4164S2 (80kW)	99-03				**PF551**		Ø 23,81	Alu
1.8 Eng.B4184S/ S3 (85kW)	7/95-7/97				**PF260**	Bch	Ø 22,20	Alu
	8/97-99				**PF551**		Ø 23,81	Alu
1.8 i Eng.B4184SM (92kW)	98-04				**PF551**		Ø 23,81	Alu
1.8, i Eng.B4184S2/ S9/ SJ (85-88-90kW)	99-04				**PF551**		Ø 23,81	Alu
1.9 Di Eng.D4192T2 (70kW)	99-00				**PF551**		Ø 23,81	Alu
1.9 Di Eng.D4192T3 (85kW)	00-03				**PF551**		Ø 23,81	Alu
1.9 Di Eng.D4192T4 (75kW)	00-03				**PF551**		Ø 23,81	Alu
1.9 T4 Eng.B4194T/ T2 (147kW)	8/97-00				**PF551**		Ø 23,81	Alu
1.9 TD Eng.D4192T (66kW)	7/95-7/97				**PF260**	Bch	Ø 22,20	Alu
	8/97-99				**PF551**		Ø 23,81	Alu

		Spare Parts	F/R	L/R	FRITECH ref.		DIMENSIONS mm.	NOTE
2.0 Eng.B4204S (100kW)	7/95-7/97				**PF260**	Bch	Ø 22,20	Alu
	8/97-04				**PF551**		Ø 23,81	Alu
2.0 Eng.B4204S (103kW)	7/95-7/97				**PF260**	Bch	Ø 22,20	Alu
	8/97-99				**PF551**		Ø 23,81	Alu
2.0 T. Eng.B4204T (118kW)	8/97-00				**PF551**		Ø 23,81	Alu
2.0 T. Eng.B4204T3 (120-121kW)	01-03				**PF551**		Ø 23,81	Alu
2.0 T4 Eng.B4204T5 (147kW)	00-04				**PF551**		Ø 23,81	Alu
S60 I 11/00-3/10								
2.0 T. Eng.B5204T5 (132kW)					**PF513**	Ate	Ø 25,40	Ch 8536-, Alu, +ABS, LHD, -DSTC
2.3 T5 Eng.B5234T3 (184kW)					**PF513**	Ate	Ø 25,40	Ch 8536-, Alu, +ABS, LHD, -DSTC
2.4 Eng.B5244S (125kW)					**PF513**	Ate	Ø 25,40	Ch 8536-, Alu, +ABS, LHD, -DSTC
2.4 D Eng.D5244T (93kW)					**PF513**	Ate	Ø 25,40	Ch 8536-, Alu, +ABS, LHD, -DSTC
2.4 D Eng.D5244T2 (96kW)					**PF513**	Ate	Ø 25,40	Ch 8536-, Alu, +ABS, LHD, -DSTC
2.4 D5 Eng.D5244T4 (136kW)					**PF513**	Ate	Ø 25,40	Ch 8536-, Alu, +ABS, LHD, -DSTC
2.4 D5 Eng.D5244T5 (120kW)					**PF513**	Ate	Ø 25,40	Ch 8536-, Alu, +ABS, LHD, -DSTC
2.4 T. Eng.B5244T3 (147kW)					**PF513**	Ate	Ø 25,40	Ch 8536-, Alu, +ABS, LHD, -DSTC
2.4 T. AWD Eng.B5244T3 (147kW)					**PF513**	Ate	Ø 25,40	Ch 8536-, Alu, +ABS, LHD, -DSTC
2.4 T5 Eng.B5244T5 (184-191kW)					**PF513**	Ate	Ø 25,40	Ch 8536-, Alu, +ABS, LHD, -DSTC
2.4, Bifuel Eng.B5244S2/ SG (103kW)					**PF513**	Ate	Ø 25,40	Ch 8536-, Alu, +ABS, LHD, -DSTC
2.5 T. Eng.B5254T2 (154kW)					**PF513**	Ate	Ø 25,40	Ch 8536-, Alu, +ABS, LHD, -DSTC
2.5 T. AWD Eng.B5254T2 (154kW)					**PF513**	Ate	Ø 25,40	Ch 8536-, Alu, +ABS, LHD, -DSTC
2.5 T. AWD Eng.B5254T4 (221-224kW)					**PF513**	Ate	Ø 25,40	Ch 8536-, Alu, +ABS, LHD, -DSTC
S70 1/97-11/00								
2.0 Eng.B5202S (93kW)	1/99-				**PF644**		Ø 23,81	Alu, +ABS, -TC
	-12/98				**PF595**		Ø 23,81/20,64	Alu, +ABS, -ASR
	-12/98				**PF596**		Ø 23,81/20,64	Alu, +ABS, +ASR
	97-				**CZ051**	Fte	Ø 22,20	
	97-00				**CZ085**	Fte	Ø 22,20	Alu
2.0 20v Eng.B5204F (105kW)	1/99-00				**PF644**		Ø 23,81	Alu, +ABS, -TC
	97-12/98				**PF595**		Ø 23,81/20,64	Alu, +ABS, -ASR
	97-12/98				**PF596**		Ø 23,81/20,64	Alu, +ABS, +ASR
	97-				**CZ051**	Fte	Ø 22,20	
	97-00				**CZ085**	Fte	Ø 22,20	Alu
2.0 T. Eng.B5204T (155kW)	1/99-				**PF644**		Ø 23,81	Alu, +ABS, -TC
	-12/98				**PF595**		Ø 23,81/20,64	Alu, +ABS, -ASR
	-12/98				**PF596**		Ø 23,81/20,64	Alu, +ABS, +ASR
2.0 T. Eng.B5204T2 (132kW)	1/99-				**PF644**		Ø 23,81	Alu, +ABS, -TC
	-12/98				**PF595**		Ø 23,81/20,64	Alu, +ABS, -ASR
	-12/98				**PF596**		Ø 23,81/20,64	Alu, +ABS, +ASR
	97-				**CZ051**	Fte	Ø 22,20	
	97-00				**CZ085**	Fte	Ø 22,20	Alu
2.0 T. Eng.B5204T3 (166kW)	1/99-				**PF644**		Ø 23,81	Alu, +ABS, -TC
	-12/98				**PF595**		Ø 23,81/20,64	Alu, +ABS, -ASR
	-12/98				**PF596**		Ø 23,81/20,64	Alu, +ABS, +ASR
2.0 T. Eng.B5204T4 (120kW)	1/99-00				**PF644**		Ø 23,81	Alu, +ABS, -TC
	97-12/98				**PF595**		Ø 23,81/20,64	Alu, +ABS, -ASR
	97-12/98				**PF596**		Ø 23,81/20,64	Alu, +ABS, +ASR
	97-00				**CZ085**	Fte	Ø 22,20	Alu
2.3 T. Eng.B5234FT+ (184kW)	1/99-				**PF644**		Ø 23,81	Alu, +ABS, -TC
	-12/98				**PF595**		Ø 23,81/20,64	Alu, +ABS, -ASR
	-12/98				**PF596**		Ø 23,81/20,64	Alu, +ABS, +ASR
	97-				**CZ051**	Fte	Ø 22,20	
	97-00				**CZ085**	Fte	Ø 22,20	Alu
2.3 T5 Eng.B5234T3 (176kW)	1/99-				**PF644**		Ø 23,81	Alu, +ABS, -TC
	-12/98				**PF595**		Ø 23,81/20,64	Alu, +ABS, -ASR
	-12/98				**PF596**		Ø 23,81/20,64	Alu, +ABS, +ASR
2.4 Eng.B5254S (125kW)	1/99-				**PF644**		Ø 23,81	Alu, +ABS, -TC
	-12/98				**PF595**		Ø 23,81/20,64	Alu, +ABS, -ASR
	-12/98				**PF596**		Ø 23,81/20,64	Alu, +ABS, +ASR
	97-				**CZ051**	Fte	Ø 22,20	
	97-00				**CZ085**	Fte	Ø 22,20	Alu
2.4 T. Eng.B5254T (142kW)	1/99-				**PF644**		Ø 23,81	Alu, +ABS, -TC
	-12/98				**PF595**		Ø 23,81/20,64	Alu, +ABS, -ASR
	-12/98				**PF596**		Ø 23,81/20,64	Alu, +ABS, +ASR

VOLVO

		Spare Parts	F/R	L/R	FRITECH ref.		DIMENSIONS mm.	NOTE
2.4 T. Eng.B5254T (142kW)	97-00				**CZ085**	Fte	Ø 22,20	Alu
2.4, AWD Eng.B5254S (121kW)	1/99-				**PF644**		Ø 23,81	Alu, +ABS, -TC
	-12/98				**PF595**		Ø 23,81/20,64	Alu, +ABS, -ASR
	-12/98				**PF596**		Ø 23,81/20,64	Alu, +ABS, +ASR
	98-				**CZ051**	Fte	Ø 22,20	Exc. AWD
2.4, AWD, Bifuel Eng.B5244S2/ SG (103kW)	1/99-				**PF644**		Ø 23,81	Alu, +ABS, -TC
	99-				**CZ051**	Fte	Ø 22,20	mod. Bifuel
2.4, AWD, Bifuel Eng.GB/ B5252S/ FS (106kW)	1/99-				**PF644**		Ø 23,81	Alu, +ABS, -TC
	-12/98				**PF595**		Ø 23,81/20,64	Alu, +ABS, -ASR
	-12/98				**PF596**		Ø 23,81/20,64	Alu, +ABS, +ASR
	98-				**CZ051**	Fte	Ø 22,20	
2.5 TDi, AWD Eng.D5252T (103kW)	1/99-				**PF644**		Ø 23,81	Alu, +ABS, -TC
	-12/98				**PF595**		Ø 23,81/20,64	Alu, +ABS, -ASR
	-12/98				**PF596**		Ø 23,81/20,64	Alu, +ABS, +ASR
	97-				**CZ051**	Fte	Ø 22,20	
S80 I (TS, XY) 5/98-7/06								
2.0 T. Eng.B5204T3 (166kW)	-2/06				**PF513**	Ate	Ø 25,40	Ch 174096-, Alu, +ABS, LHD, -DSTC
2.0 T. Eng.B5204T4 (120kW)	-2/06				**PF513**	Ate	Ø 25,40	Ch 174096-, Alu, +ABS, LHD, -DSTC
2.0 T. Eng.B5204T5 (132kW)	-2/06				**PF513**	Ate	Ø 25,40	Ch 174096-, Alu, +ABS, LHD, -DSTC
2.4 Eng.B5244S (125kW)	-2/06				**PF513**	Ate	Ø 25,40	Ch 174096-, Alu, +ABS, LHD, -DSTC
2.4 D Eng.D5244T2 (96kW)	-2/06				**PF513**	Ate	Ø 25,40	Alu, +ABS, LHD, -DSTC
2.4 D5 Eng.D5244T (120kW)	-2/06				**PF513**	Ate	Ø 25,40	Alu, +ABS, LHD, -DSTC
2.4 T5 Eng.B5244T3 (147kW)	-2/06				**PF513**	Ate	Ø 25,40	Alu, +ABS, LHD, -DSTC
2.4 T5 AWD Eng.B5254T3 (147kW)	00-03				**PF513**	Ate	Ø 25,40	Alu, +ABS, LHD, -DSTC
2.4, Bifuel Eng.B5244S2/ SG2 (103kW)	-2/06				**PF513**	Ate	Ø 25,40	Ch 174096-, Alu, +ABS, LHD, -DSTC
2.5 T., AWD Eng.B5254T2 (154kW)	-2/06				**PF513**	Ate	Ø 25,40	Alu, +ABS, LHD, -DSTC
2.5 TDi Eng.D5252T (103kW)	-2/06				**PF513**	Ate	Ø 25,40	Ch 174096-, Alu, +ABS, LHD, -DSTC
2.8 T6 Eng.B6284T (200kW)	-2/06				**PF513**	Ate	Ø 25,40	Ch 174096-, Alu, +ABS, LHD, -DSTC
2.9 Eng.B6294S (147kW)	-2/06				**PF513**	Ate	Ø 25,40	Ch 174096-, Alu, +ABS, LHD, -DSTC
2.9 Eng.B6304S3 (150kW)	-2/06				**PF513**	Ate	Ø 25,40	Ch 174096-, Alu, +ABS, LHD, -DSTC
3.0 Eng.B6294S2 (144kW)	-2/06				**PF513**	Ate	Ø 25,40	Alu, +ABS, LHD, -DSTC
3.0 T6 Eng.B6294T (200kW)	-2/06				**PF513**	Ate	Ø 25,40	Alu, +ABS, LHD, -DSTC
S90 1/97-5/98								
2.9 Eng.B6304S2 (132kW)	97-				**CZ051**	Fte	Ø 22,20	
V70 I SW (LV) 1/97-3/00								
2.0 Eng.B5202S (93kW)	1/99-				**PF644**		Ø 23,81	Alu, +ABS, -TC
	-12/98				**PF595**		Ø 23,81/20,64	Alu, +ABS, -ASR
	-12/98				**PF596**		Ø 23,81/20,64	Alu, +ABS, +ASR
	97-				**CZ051**	Fte	Ø 22,20	
	97-00				**CZ085**	Fte	Ø 22,20	Alu
2.0 20v Eng.B5204F (105kW)	1/99-				**PF644**		Ø 23,81	Alu, +ABS, -TC
	-12/98				**PF595**		Ø 23,81/20,64	Alu, +ABS, -ASR
	-12/98				**PF596**		Ø 23,81/20,64	Alu, +ABS, +ASR
	97-				**CZ051**	Fte	Ø 22,20	
	97-00				**CZ085**	Fte	Ø 22,20	Alu
2.0 T. Eng.B5204T (155kW)	1/99-				**PF644**		Ø 23,81	Alu, +ABS, -TC
	-12/98				**PF595**		Ø 23,81/20,64	Alu, +ABS, -ASR
	-12/98				**PF596**		Ø 23,81/20,64	Alu, +ABS, +ASR
2.0 T. Eng.B5204T2 (132kW)	1/99-				**PF644**		Ø 23,81	Alu, +ABS, -TC
	-12/98				**PF595**		Ø 23,81/20,64	Alu, +ABS, -ASR
	-12/98				**PF596**		Ø 23,81/20,64	Alu, +ABS, +ASR
	97-				**CZ051**	Fte	Ø 22,20	
	97-00				**CZ085**	Fte	Ø 22,20	Alu
2.0 T. Eng.B5204T4 (120kW)	1/99-				**PF644**		Ø 23,81	Alu, +ABS, -TC
	-12/98				**PF595**		Ø 23,81/20,64	Alu, +ABS, -ASR
	-12/98				**PF596**		Ø 23,81/20,64	Alu, +ABS, +ASR
	97-00				**CZ085**	Fte	Ø 22,20	Alu
2.0 T., AWD Eng.B5204T3 (166kW)	1/99-				**PF644**		Ø 23,81	Alu, +ABS, -TC
	-12/98				**PF595**		Ø 23,81/20,64	Alu, +ABS, -ASR
	-12/98				**PF596**		Ø 23,81/20,64	Alu, +ABS, +ASR
2.3 T., AWD Eng.B5234FT+ (184kW)	1/99-				**PF644**		Ø 23,81	Alu, +ABS, -TC
	-12/98				**PF595**		Ø 23,81/20,64	Alu, +ABS, -ASR
	-12/98				**PF596**		Ø 23,81/20,64	Alu, +ABS, +ASR
	97-				**CZ051**	Fte	Ø 22,20	

		Spare Parts	F/R	L/R	FRITECH ref.		DIMENSIONS mm.	NOTE
2.3 T5, AWD Eng.B5234T3 (176kW)	1/99-				**PF644**		Ø 23,81	Alu, +ABS, -TC
	-12/98				**PF595**		Ø 23,81/20,64	Alu, +ABS, -ASR
	-12/98				**PF596**		Ø 23,81/20,64	Alu, +ABS, +ASR
2.4, Bifuel Eng.B5244SG/ GB5244SG (103kW)	1/99-				**PF644**		Ø 23,81	Alu, +ABS, -TC
2.5 Eng.B5254S (121kW)	1/99-				**PF644**		Ø 23,81	Alu, +ABS, -TC
	-12/98				**PF595**		Ø 23,81/20,64	Alu, +ABS, -ASR
	-12/98				**PF596**		Ø 23,81/20,64	Alu, +ABS, +ASR
	98-				**CZ051**	Fte	Ø 22,20	
2.5 Eng.B5254S (125kW)	1/99-				**PF644**		Ø 23,81	Alu, +ABS, -TC
	-12/98				**PF595**		Ø 23,81/20,64	Alu, +ABS, -ASR
	-12/98				**PF596**		Ø 23,81/20,64	Alu, +ABS, +ASR
	97-				**CZ051**	Fte	Ø 22,20	
2.5 AWD Eng.B5244T2 (195kW)	99-				**PF644**		Ø 23,81	Alu, +ABS, -TC
	99-				**CZ051**	Fte	Ø 22,20	
2.5 T., AWD Eng.B5254T (142kW)	1/99-				**PF644**		Ø 23,81	Alu, +ABS, -TC
	-12/98				**PF595**		Ø 23,81/20,64	Alu, +ABS, -ASR
	-12/98				**PF596**		Ø 23,81/20,64	Alu, +ABS, +ASR
	97-				**CZ051**	Fte	Ø 22,20	
	97-00				**CZ085**	Fte	Ø 22,20	Alu
2.5 TDi Eng.D5252T (103kW)	1/99-				**PF644**		Ø 23,81	Alu, +ABS, -TC
	-12/98				**PF595**		Ø 23,81/20,64	Alu, +ABS, -ASR
	-12/98				**PF596**		Ø 23,81/20,64	Alu, +ABS, +ASR
	97-				**CZ051**	Fte	Ø 22,20	
	97-00				**CZ085**	Fte	Ø 22,20	Alu
2.5, Bifuel Eng.GB/ B5252S (106kW)	1/99-8/99				**PF644**		Ø 23,81	Alu, +ABS, -TC
	-12/98				**PF595**		Ø 23,81/20,64	Alu, +ABS, -ASR
	-12/98				**PF596**		Ø 23,81/20,64	Alu, +ABS, +ASR
	98-				**CZ051**	Fte	Ø 22,20	
	98-99				**CZ085**	Fte	Ø 22,20	Alu
V70 II SW (SW) 3/00-6/07								
2.0 T. Eng.B5204T2 (132kW)	01-				**PF513**	Ate	Ø 25,40	Ch 68133-, Alu, +ABS, LHD, -DSTC
2.3 T5 Eng.B5234T4 (184kW)	00-				**PF513**	Ate	Ø 25,40	Ch 68133-, Alu, +ABS, LHD, -DSTC
2.4 Eng.B5244S2 (125kW)	00-				**PF513**	Ate	Ø 25,40	Ch 68133-, Alu, +ABS, LHD, -DSTC
2.4 D Eng.D5244T (93kW)	05-07				**PF513**	Ate	Ø 25,40	Alu, +ABS, LHD, -DSTC
2.4 D Eng.D5244T2 (96kW)	01-07				**PF513**	Ate	Ø 25,40	Ch 68133-, Alu, +ABS, LHD, -DSTC
2.4 D5, AWD Eng.D5244T (120kW)	03-				**PF513**	Ate	Ø 25,40	Alu, +ABS, LHD, -DSTC
2.4 D5, AWD Eng.D5244T4 (136kW)	05-				**PF513**	Ate	Ø 25,40	Alu, +ABS, LHD, -DSTC
2.4 T. AWD Eng.B5244T3 (147kW)	01-				**PF513**	Ate	Ø 25,40	Ch 68133-, Alu, +ABS, LHD, -DSTC
2.4 T5 Eng.B5244T5 (191kW)	04-				**PF513**	Ate	Ø 25,40	Alu, +ABS, LHD, -DSTC
2.5 T. AWD R Eng.B5254T4 (221kW)	03-				**PF513**	Ate	Ø 25,40	Alu, +ABS, LHD, -DSTC
2.5 T., AWD Eng.B5254T2 (154kW)	02-				**PF513**	Ate	Ø 25,40	Alu, +ABS, LHD, -DSTC
2.5 TDi Eng.D5252T (103kW)	00-				**PF513**	Ate	Ø 25,40	Ch 68133-, Alu, +ABS, LHD, -DSTC
XC70 I Cross Country 9/00-6/07								
2.4 D5 AWD Eng.D5244T (120kW)	02-				**PF513**	Ate	Ø 25,40	Alu, +ABS, LHD, -DSTC
2.4 D5 AWD Eng.D5244T4 (136kW)	05-07				**PF513**	Ate	Ø 25,40	Alu, +ABS, LHD, -DSTC
2.4 T. AWD Eng.B5244T3 (147kW)	00-				**PF513**	Ate	Ø 25,40	Ch 11001-, Alu, +ABS, LHD, -DSTC
2.5 T. AWD Eng.B5254T2 (154kW)	02-				**PF513**	Ate	Ø 25,40	Alu, +ABS, LHD, -DSTC

ZASTAVA

101 (1100) 6/73-12/93								
1.1 Eng.128A.000 (37kW)	75-80		R		**CF002**		Ø 19,05	
	75-80				**PF044**		Ø 19,05	
	75-80				**PF003**		Ø 19,05	
1.1 Eng.128A.000 (40kW)	73-90		R		**CF002**		Ø 19,05	
	73-90				**PF044**		Ø 19,05	
	73-90				**PF003**		Ø 19,05	
1.1 Eng.128A.064 (41kW)	75-93		R		**CF002**		Ø 19,05	
	75-93				**PF044**		Ø 19,05	
	75-93				**PF003**		Ø 19,05	
1.1 Super Eng.128AC.5000 (47kW)	79-81		R		**CF002**		Ø 19,05	
	79-81				**PF044**		Ø 19,05	
	79-81				**PF003**		Ø 19,05	
1.3 Eng.128A.6064 (48kW)	81-93		R		**CF002**		Ø 19,05	
	81-93				**PF044**		Ø 19,05	

ZASTAVA

		Spare Parts	F/R	L/R	FRITECH ref.		DIMENSIONS mm.	NOTE
1.3 Eng.128A.6064 (48kW)	81-93				**PF003**		Ø 19,05	
1300 - 1500 1/78-1/87								
All models	78-87				**CZ005**		Ø 19,05	Alu
	78-87				**CZ101**		Ø 19,05	
	78-87				**PZ010**		Ø 19,05	Alu
	78-87				**PZ111**		Ø 19,05	
Contact 1/78-1/83								
1.1 Super	3/78-83		R		**CF002**		Ø 19,05	
	3/78-83				**PF045**		Ø 19,05	
Koral 1/90-11/08								
1.2	90-		R		**CF002**		Ø 19,05	
	90-				**PF050**		Ø 19,05	
	90-				**CT001**	Benditalia	Ø 25,40	Alu
Nogaro 1/80-1/83								
1.3	80-83		R		**CF002**		Ø 19,05	
	80-83				**PF045**		Ø 19,05	
Tempo 1/91-1/92								
All models Eng.164A0	91-92		R		**CF002**		Ø 19,05	
	91-92				**PF003**		Ø 19,05	
Yugo 45/55/65 4/80-6/95								
0.9 Eng.100GL/ 064 (33kW)	80-92		R		**CF002**		Ø 19,05	
	80-92				**PF003**		Ø 19,05	
	80-92				**CT001**	Benditalia	Ø 25,40	Alu
1.1 60 EFI Eng.11E1.064 (44kW)	91-95		R		**CF002**		Ø 19,05	
	91-95				**PF003**		Ø 19,05	
	91-95				**CT001**	Benditalia	Ø 25,40	Alu
1.3 65 EFI Eng.13E1.064 (48kW)	91-95		R		**CF002**		Ø 19,05	
	91-95				**PF003**		Ø 19,05	
	91-95				**CT001**	Benditalia	Ø 25,40	Alu
Yugo 750 1/82-								
All models	82-		F		**CF591**		Ø 22,22	
	82-		R		**CF002**		Ø 19,05	
	82-				**PF011**		Ø 19,05	
	82-				**PF092**		Ø 19,05	
Yugo Florida 10/88-12/08								
1.1 Eng.128A.000 (44kW)	89-		R		**CF002**		Ø 19,05	
1.3 Eng.13E3.064 (50kW)	91-		R		**CF002**		Ø 19,05	
1.4 Eng.160A1.000 (52kW)	88-95		R		**CF002**		Ø 19,05	
1.6 Eng.149A.000 (62kW)	89-95		R		**CF002**		Ø 19,05	

ABARTH

Ad. OE	FRITECH ref.
55190993	PZ146
77364197	PF858
77364662	PF704
77365803	CF866

ALFA ROMEO

Ad. OE	FRITECH ref.
105484533990	CZ008
113054502000	PF116
116001205012	CZ009
116001205014	CZ009
116001205111	PF116
116504502000	PF116
164032900000	PF091
46421938	CZ008
46421939	CZ030
46421942	CZ024
46478974	PF382
46516374	PZ068
46531636	CZ023
46547168	PZ073
46736971	PF246
46833774	PF795
46835408	CZ071
510364	PZ013
51733637	PF382
533991	CZ008
542407B	PZ013
55189164	PZ073
55190993	PZ146
55196177	PZ073
60501237	PZ013
60502665	CZ008
60511530	PZ025
60517201	PF116
60518194	PZ016
60547341	CZ009
60567047	CZ035
60571358	PF382
60583353	PZ033
60589820	PF042
60608676	PF042
60627989	PF246
60653742	PZ070
60714480	PF116
60714527	PF116
60724310	PF116
60729339	PF116
60729341	PF116
60743581	PF091
60744183	CZ008
60749849	PF117
60749853	PF138
60749888	CF110
60749889	CF111
60749984	CF112
60749985	CF113
60750098	PF138
60750112	PF030
60750204	CF128
60750205	CF129
60750452	PF138
60760126	PF091
60765000	PF030
60800249	PF116
60809897	PZ034
60809922	PF382
60809966	CF135
60812073	PF382
60812081	CZ023
60815343	PZ070
60815725	PF246
60815759	PZ032
705530	PF117
705534	PF138
705578	CF110
705579	CF111
705688	CF112
705689	CF113
705833	PF030
705962	CF128
705963	CF129
71737950	CF135
71737951	CF135
71737956	CF132
71737957	CF130
71739592	PF042
71739993	PF091
71740004	PF527
77362070	PF322
77363612	PF520
77363619	PF521
77363860	PF700
77364194	PF700
77364197	PF858
77364491	PF505
77364495	PF239
77364501	PF527
77364503	PF605
77365598	PF934
77365640	PF858
77365713	PF858
77365715	PF700
77366541	PF934
7740758	CF130
794937	PF042
9944382	PF091
9946624	PF527
9947161	CF132
9948218	PF527
9948315	PF042
9948690	PF591
9948847	PF239
9948850	PF240
9949166	PF605
9949550	PF239
9949551	PF505
9949648	PF322
9949652	PF323
9950173	PF091
9950521	PF042
9950817	CF130
9951103	PF527
9951116	PF042

ALFA ROMEO LCV

Ad. OE	FRITECH ref.
4379876	CT001
4398074	CT001
4797280	PF029
4797460	PF029
4802930	PF029
4844300	PF029
60738494	PF025
7545170	PF029
7631110	CT001
7713643	PF029
790616	CF270
791459	CT001
791462	CT012
791737	CT011
8122258	PF144
9937777	CF270
9938829	PF031
9938868	CF157
9940554	CF157
9940558	CF210
9945911	CF157
9945939	CF210
9981629	PF144
9983470	CF163
9983471	CF209

AMERICAN MOTORS

Ad. OE	FRITECH ref.
2620735	CF436
2620736	CF437
5461441	CF610
5474000	CF609
5474001	CF610

AUDI

Ad. OE	FRITECH ref.
171 611 019	PF058
171 611 019	PF059
171 611 019A	PF059
171 611 019B	PF058
171 611 019C	PF059
171 611 019D	PF058
171 611 019E	PF059
171 611 019H	PF059
171 611 019N	PF059
171 611 051A	CF001
171 611 051B	CF001
171 611 053	CF001
171 611 053A	CF001
171 611 053B	CF001
1H0 611 053	CF121
1H0 611 053A	CF725
1H0 611 053B	CF532
1J0 611 053	CF127
1J0 721 261A	CZ026
1J0 721 261A	CZ081
1J0 721 261D	CZ076
1J0 721 261E	CZ026
1J0 721 261E	CZ081
1J0 721 261F	CZ026
1J0 721 261F	CZ081
1J1 614 019	PF234
1J1 614 019A	PF241
1J1 614 019C	PF799
1J1 614 019F	PF799
1J1 721 388A	PZ064
1J1 721 388A	PZ107
1J1 721 388C	PZ064
1J1 721 388C	PZ107
1J1 721 388D	PZ064
1J1 721 388D	PZ107
1J1 721 388E	PZ064
1J1 721 388E	PZ107
1J2 614 019	PF818
1K0 721 261	CZ080
1K0 721 261A	CZ080
1K0 721 261B	CZ080
1K0 721 261C	CZ080
1K0 721 261F	CZ080
1K0 721 261G	CZ080
1K0 721 261H	CZ080
1K0 721 261J	CZ080
1K0 721 261K	CZ080
1K0 721 261L	CZ080
1K0 721 261N	CZ080
1K0 721 261Q	CZ080
1K0 721 261R	CZ080
1K1 614 019	PF647
1K1 614 019B	PF646
1K1 614 019D	PF869
1K1 614 019F	PF870
1K1 614 019K	PF869
309 611 051	CF000
309 611 053	CF000
321 611 019C	PF060
321 611 019D	PF060
321 611 019E	PF293
322 611 019	PF179
331 611 051A	CF000
331 611 053	CF000
331 611 053A	CF000
331 611 053B	CF000
331 698 051A	CF000
357 611 053B	CF127
357 721 261	CZ093
357 721 261A	CZ093
357 721 261B	CZ093
3A0 611 053	CF127
443 611 021	PF142
4A0 611 019	PF215
4A0 611 019A	PF222
4A0 611 019C	PF215
4A0 611 019D	PF222
4A0 611 021A	PF222
4A0 611 021B	PF215
4A0 611 021D	PF222
4A0 611 021E	PF276
4A0 721 261	CZ036
4B3 611 021	PF879
4D0 611 021	PF492
4D0 611 021A	PF492
4D0 611 021B	PF277
6N0 611 053	CF239
6Q0 611 053C	CF239
6Q0 721 261F	CZ099
6Q0 721 261	CZ086
6Q0 721 261	CZ098
6Q0 721 261A	CZ077
6Q0 721 261A	CZ099
6Q0 721 261C	CZ086
6Q0 721 261C	CZ098
6Q0 721 261D	CZ077
6Q0 721 261D	CZ099
6Q0 721 261E	CZ086
6Q0 721 261E	CZ098
6Q0 721 261F	CZ077
6QE 611 053	CF239
6QE 721 261	CZ099
6R0 721 261	CZ086
6R0 721 261	CZ098
803 611 051	CF267
811 611 019B	PF059
811 611 019E	PF178
811 611 019Q	PF179
839 611 021	PF293
843 611 021A	PF060
843 611 021C	PF293
843 611 021D	PF060
861 611 051A	CF080
861 611 053	CF107
861 611 053A	CF080
8A0 611 021	PF215
8D0 611 021A	PF223
8D0 611 021B	PF223
8D0 611 021C	PF383
8D0 721 257	CZ052
8D0 721 257	CZ097
8D1 721 401	PZ076
8D1 721 401	PZ106
8D1 721 401B	PZ076
8D1 721 401B	PZ106
8D2 611 021	PF278
8E0 611 021	PF534
8E0 611 021A	PF826
8E0 611 021B	PF826
8E0 721 257A	CZ074
8E0 721 257A	CZ096
8E0 721 257B	CZ074
8E0 721 257B	CZ096
8E0 721 257E	CZ074
8E0 721 257E	CZ096
8E0 721 257F	CZ074
8E0 721 257F	CZ096
8E0 721 257H	CZ083
8E0 721 257J	CZ083
8E0 721 257K	CZ083
8E0 721 257L	CZ083
8E0 721 257M	CZ074
8E0 721 257M	CZ096
8E0 721 257N	CZ074
8E0 721 257N	CZ096
8E0 721 257P	CZ083
8E0 721 257Q	CZ083
8E1 721 401	PZ085
8E1 721 401	PZ105
8E1 721 401AG	PZ085
8E1 721 401AG	PZ105
8E1 721 401AK	PZ105
8E1 721 401C	PZ085
8E1 721 401C	PZ105
8E1 721 401G	PZ085
8E1 721 401G	PZ105
8E1 721 401K	PZ085
8E1 721 401K	PZ105
8K0 721 257	CZ123
8K0 721 257A	CZ123
8K0 721 257B	CZ123
8K0 721 257C	CZ123
8K0 721 257G	CZ123
8N1 614 019	PF909
8Z1 614 019	PF533
8Z1 614 019A	PF535
8Z1 614 019B	PF827

AUTOBIANCHI

Ad. OE	FRITECH ref.
4121616	CF002
4188535	PF010
4218319	PF010
4264373	PF044
4264934	PF044
4270673	PF010
4291870	PF046
4297870	PF046
4342112	PF044
4342465	PF044
4347258	CF002
4368051	PF044
4368052	PF044
4373614	CF002
4374780	PF044
4374781	PF044
4379293	PF044
4379876	CT001
4394460	CF002
4394596	PF004
4394597	PF004
4394780	PF044
4394890	PF044
4394899	PF044
4396086	PF044
4398074	CT001
4398200	PF044
4398743	PF044
4410503	PF050
71738324	CF004
7611100	PF010
7613105	PF050
7621101	CF002
7631110	CT001
7696710	CF004
790204	PF050
790215	CF002
790833	CF004
791456	CT006
791459	CT001
792040	PF009
792895	PF009
792987	PF050

CROSS REFERENCES LIST

AUTOBIANCHI

Ad. OE	FRITECH ref.
793301	PF044
793302	PF044
793307	PF004
793309	PF004
794008	PF185
9943323	PF185
9945379	CF004
9948232	CF004

BEDFORD

Ad. OE	FRITECH ref.
105E2261	CF261
1708706	CF261
2696472	CF335
2696483	CF192
91023212	CF336
91023213	CF334
91023266	CF425
91023267	CF427
91023391	CF424
91032989	CF360
91051842	CF422
91051843	CF423
91109240	CF527
91109241	CF526
91109261	CF420
91125426	CF289
91125427	CF288
94230541	CF237
94233500	CF287
94256308	CF455

BMW

Ad. OE	FRITECH ref.
21 52 1 114 537	CZ013
21 52 1 116 300	CZ013
21 52 1 116 303	PZ020
21 52 1 150 782	PZ020
21 52 1 152 658	PZ050
21 52 1 154 580	PZ050
21 52 1 156 000	PZ050
21 52 1 156 004	PZ020
21 52 1 158 903	CZ048
21 52 1 159 031	PZ081
21 52 1 159 031	PZ101
21 52 1 159 045	CZ027
21 52 1 159 045	CZ095
21 52 1 161 530	CZ027
21 52 1 161 530	CZ095
21 52 1 162 148	PZ030
21 52 1 162 303	PZ081
21 52 1 162 303	PZ101
21 52 1 163 899	PZ080
21 52 1 163 899	PZ102
21 52 1 163 900	PZ087
21 52 1 164 529	CZ088
21 52 1 164 916	CZ027
21 52 1 164 916	CZ095
21 52 1 164 917	CZ048
21 52 1 164 918	CZ088
21 52 4 126 128	PZ050
21 52 6 750 546	PZ030
21 52 6 751 146	PZ080
21 52 6 751 146	PZ102
21 52 6 756 456	CZ118
21 52 6 756 747	PZ080
21 52 6 756 747	PZ102
21 52 6 758 820	PZ087
21 52 6 758 822	PZ080
21 52 6 758 822	PZ102
21 52 6 758 829	PZ081
21 52 6 758 829	PZ101
21 52 6 758 830	PZ030
21 52 6 766 277	CZ048
21 52 6 766 279	CZ073
21 52 6 773 670	PZ080
21 52 6 773 670	PZ102
21 52 6 775 872	CZ118
21 52 6 775 922	CZ073
21 52 6 775 924	CZ048
21 52 6 785 964	CZ118
21 52 6 785 966	CZ073
34 21 1 101 734	CF483
34 21 1 101 760	CF483
34 21 1 103 392	CF367
34 21 1 107 136	CF484
34 21 1 107 137	CF367
34 21 1 109 342	CF713
34 21 1 117 064	CF370
34 21 1 117 104	CF156
34 21 1 119 945	CF523
34 21 1 154 235	CF041
34 21 1 154 236	CF041
34 21 1 156 167	CF106
34 21 1 159 146	CF245
34 21 1 159 569	CF176
34 21 1 207 130	CF483
34 21 1 561 670	CF106
34 21 3 061 719	CF483
34 21 3 460 120	CF484
34 31 1 153 916	PF123
34 31 1 157 111	PF326
34 31 1 161 504	PF327
34 31 1 161 860	PF220
34 31 1 161 861	PF326
34 31 1 162 915	PF327
34 31 1 163 406	PF975
34 31 1 163 551	PF283
34 31 1 163 711	PF283
34 31 1 165 543	PF593
34 31 1 165 544	PF608
34 31 1 165 582	PF284
34 31 1 165 584	PF804
34 31 6 750 642	PF804
34 31 6 750 684	PF615
34 31 6 752 540	PF628
34 31 6 757 743	PF594
34 31 6 757 839	PF614
34 31 6 761 077	PF629
34 31 6 761 079	PF992
34 31 6 764 123	PF802
34 31 6 764 131	PF890
34 31 6 764 190	PF975
34 33 1 156 978	PF326
34 33 6 779 717	PF802
34 33 6 779 720	PF890
34 33 6 779 743	PF629
34 33 6 785 662	PF802
34 33 6 785 664	PF890
34 33 6 785 666	PF906
34 33 6 785 926	PF976
34 33 6 786 586	PF992
34 33 6 786 629	PF629
34 33 6 796 729	PF991

BUICK

Ad. OE	FRITECH ref.
18001997	CF932
18003743	CF928
18003905	CF946
18004793	CF932
18004880	CF931
18004889	CF945
18004890	CF931
18005894	CF927
18007980	CF928
18007981	CF927
18008056	CF928
18008649	CF930
18009123	CF937
18010106	CF937
18012303	CF928
18012582	CF933
18012582	CF944
18013386	CF945
18014168	CF940
18014171	CF952
18014499	CF784
18014589	CF951
18019217	CF957
18020210	CF933
18020210	CF944
18029943	CF933
18029943	CF944
21019205	CF320
5462939	CF945
5465497	CF932
5465580	CF931
5469321	CF945
5472327	CF932

CADILLAC

Ad. OE	FRITECH ref.
18001997	CF932
18004793	CF932
18004880	CF931
18004890	CF931
18004946	CF953
18008649	CF930
18009123	CF937
18010106	CF937
18012582	CF933
18012582	CF944
18014081	CF959
18014168	CF940
18019217	CF957
18020210	CF933
18020210	CF944
18020674	CF954
18029766	CF954
18029943	CF933
18029943	CF944
4761602	CF954
5452329	CF953
5465497	CF932
5465580	CF931
5468290	CF953
5469331	CF953
5472327	CF932

CADILLAC TRUCK

Ad. OE	FRITECH ref.
18014081	CF959

CESAB (CARELLI ELEVATORI)

Ad. OE	FRITECH ref.
990561	CF967

CHEVROLET

Ad. OE	FRITECH ref.
13286445	PF941
13304907	CF903
431335	CF864
93740568	CF864
94566232	PF442
94566233	PF443
95018640	CF903
95194945	CF679
95231320	CF1003
95975171	CF074
96320670	CF678
96418831	PF871
96518606	CF678
96574718	CF074
96860200	CF678
96963071	PF442
96963072	PF443

CHEVROLET USA

Ad. OE	FRITECH ref.
18001997	CF932
18003743	CF928
18003905	CF946
18004609	CF942
18004793	CF932
18004794	CF941
18004880	CF931
18004888	CF934
18004889	CF945
18004890	CF931
18004946	CF953
18005894	CF927
18007980	CF928
18007981	CF927
18008056	CF928
18008649	CF930
18009123	CF937
18009377	CF935
18010106	CF937
18011143	CF938
18012056	CF939
18012273	CF947
18012303	CF928
18012304	CF938
18012305	CF935
18012582	CF933
18012582	CF944
18013386	CF945
18013954	CF960
18013956	CF961
18014081	CF959
18014168	CF940
18014171	CF952
18014499	CF784
18014589	CF951
18017570	CF762
18019217	CF957
18019496	CF948
18020210	CF933
18020210	CF944
18029868	CF955
18029943	CF933
18029943	CF944
18039335	CF955
2621260	CF941
2621267	CF942
4761603	CF941
5452329	CF953
5462939	CF945
5464077	CF934
5465497	CF932
5465580	CF931
5468290	CF953
5469245	CF934
5469321	CF945
5469331	CF953
5472327	CF932
91172682	CF554
91172683	CF555
94656167	CF963
94843771	CF215
94843772	CF214
94847494	CF214
94847495	CF215
94851529	CF214
94851530	CF215
94853016	CF214
94853017	CF215
94855769	CF214
94855770	CF215
96052368	CF301

CHRYSLER

Ad. OE	FRITECH ref.
05117877AA	PZ075
05191305AA	CF994
4126780	CF402
4238701	CF402
4423601	CF695
4683264	PF811
4683264AD	PF811
4721154AA	PF927
4721154AB	PF927
4721447AB	PF809
4721565AA	PF928
4762296	CF402
4762404	CF785
4797659	CF779
5093236AA	CF794
5204338	CF402
5252617	CF695
77363849	CF827
K04683264AD	PF811

CHRYSLER USA

Ad. OE	FRITECH ref.
4126780	CF402
4238701	CF402
4238706	CF929
4313056	CF319
4762296	CF402
5204338	CF402

CITROËN

Ad. OE	FRITECH ref.
1487399080	PZ130
1607138880	CF921
1612440280	CF1018
2182.07	PZ130
2182.15	PZ115
2182.16	CZ104
2182.17	CZ103
2182.24	PZ116
2182.29	PZ114
2182.66	PZ114
2182.82	PZ116
2182.95	CZ103
4402.95	CF045
4402.A2	CF133
4402.A7	CF094
4402.A8	CF159
4402.C3	CF159
4402.C6	CF158
4402.C7	CF134
4402.C8	CF162
4402.E1	CF683
4402.E2	CF684
4402.E3	CF520
4402.E5	CF520
4402.E6	CF801
4402.E7	CF868
4402.E8	CF158
4402.E9	CF683
4402.E9	CF684
4402.F0	CF802

CITROËN

Ad. OE	FRITECH ref.
4402.F1	CF850
4402.F8	CF867
4402.G1	CF826
4601.85	PF007
4601.96	PF197
4601.A1	PF196
4601.E0	PF188
4601.E1	PF218
4601.E2	PF217
4601.E3	PF197
4601.E4	PF196
4601.E8	PF271
4601.E9	PF265
4601.F0	PF227
4601.F1	PF213
4601.F2	PF266
4601.F3	PF571
4601.F4	PF213
4601.F6	PF268
4601.F9	PF269
4601.G0	PF270
4601.G1	PF271
4601.G9	PF571
4601.H4	PF007
4601.H5	PF243
4601.H8	PF007
4601.H9	PF272
4601.J3	PF269
4601.J4	PF274
4601.K0	PF385
4601.K1	PF429
4601.K2	PF464
4601.K5	PF458
4601.L4	PF573
4601.L5	PF601
4601.L7	PF508
4601.L8	PF507
4601.L9	PF506
4601.N1	PF573
4601.N4	PF606
4601.P5	PF650
4601.P8	PF884
4601.R0	PF625
4601.R1	PF798
4601.R3	PF853
4601.R6	PF791
4601.R7	PF792
4601.R8	PF854
4601.R9	PF855
4601.T2	PF798
4601.T5	PF915
4601.V0	PF873
4601.V1	PF798
4601.V7	PF793
4601.W2	PF573
4601.W6	PF794
4601.W8	PF916
4601.W9	PF917
4601.X0	PF918
4601.X1	PF919
4601.Y3	PF873
4601.Y4	PF798
5415212A	CF350
5438259L	PF056
5479184	PF056
5479184Y	PF056
5488527C	CF350
5490764T	PF057
75491787	PF085
75492434	CF203
75530008	CF381
79 01 440 247	CF012
79 01 440 248	CF013
79 01 440 250	CF031
79 10 022 584	CF114
79 10 022 585	CF115
79 10 027 051	PF080
79 10 028 993	CF056
91510533	PF007
91518534	PF008
91518535	PF008
9404402868	CF063
9404402878	CF064
9404601858	PF007
94601978	PF008
95492940	PF085
95493191	PF057
95493193	PF085
95494208	PF083
95496631	PF002
95496738	CF103
95534127	CF426
95542783	CF012
95542784	CF013
95542785	CF056
95555655	PF057
95568067	CF025
95568068	CF026
95568069	CF063
95568070	CF064
95569738	CF018
95569739	CF031
95571755	PF085
95571759	PF085
9559519380	PF002
95608852	CF045
95608853	CF077
95608854	CF078
95633277	PF143
95644348	PF008
95659474	CF025
95659475	CF026
95659534	PF007
95659617	PF180
95659664	CF092
95659665	CF093
95659668	CF122
95659673	CF083
95659674	CF084
95666966	PF191
95668067	CF061
95668068	CF062
95668069	CF043
95668070	CF042
96075932	PF173
9635231180	CZ104
AM 453.05A	CF349
AM 453.05E	CF350
AY 453.010A	CF203
AY 453.011A	CF203
AY 453.04	CF381
AYA 453.011A	CF203
AZ 453.05A	CF382
AZU 453.04	CF381

CITROËN LCV

Ad. OE	FRITECH ref.
1487399080	PZ130
1607332180	PZ155
2182.07	PZ130
2182.15	PZ115
2182.16	CZ104
2182.17	CZ103
2182.26	PZ155
2182.44	PZ155
2182.48	PZ155
2182.95	CZ103
2182.F6	PZ146
4402.A3	CF182
4402.A4	CF181
4402.A5	CF183
4402.A7	CF094
4402.A8	CF159
4402.C3	CF159
4402.C6	CF158
4402.C8	CF162
4402.E1	CF683
4402.E2	CF684
4402.E3	CF520
4402.E4	CF182
4402.E5	CF520
4402.E6	CF801
4402.E7	CF868
4402.E8	CF158
4402.E9	CF683
4402.E9	CF684
4402.F2	CF830
4402.F3	CF827
4601.96	PF197
4601.A1	PF196
4601.C8	PF210
4601.D0	PF207
4601.D1	PF208
4601.D3	PF205
4601.E1	PF218
4601.E2	PF217
4601.E3	PF197
4601.E4	PF196
4601.E5	PF209
4601.E6	PF206
4601.E8	PF271
4601.E9	PF265
4601.F0	PF227
4601.F2	PF266
4601.F6	PF268
4601.G0	PF270
4601.G1	PF271
4601.H9	PF272
4601.J9	PF462
4601.K0	PF385
4601.K1	PF429
4601.K2	PF464
4601.L7	PF508
4601.L8	PF507
4601.L9	PF506
4601.N1	PF573
4601.N5	PF526
4601.N6	PF547
4601.P8	PF884
4601.R0	PF625
4601.R1	PF798
4601.T3	PF877
4601.T4	PF878
4601.T6	PF874
4601.T7	PF724
4601.T8	PF876
4601.T9	PF875
4601.V7	PF793
4861.72	CT016
5.415.212A	CF350
5.415.213L	CF383
5.438.259L	PF056
5.479.184	PF056
5.479.184Y	PF056
5.488.527C	CF350
5.488.528	CF383
5.488.528N	CF383
5.490.764T	PF057
75491787	PF085
75492434	CF203
75530008	CF381
95492940	PF085
95493191	PF057
95493193	PF085
95494208	PF083
95496631	PF002
95555655	PF057
95571755	PF085
95571759	PF085
9559519380	PF002
95606669	CF020
95659673	CF083
95659674	CF084
9635231180	CZ104
99388259	PF031
9940558	CF210
AM 453.05E	CF350
AY 453.010A	CF203
AY 453.011A	CF203
AY 453.04	CF381
AY 453.05	CF383
AYA 453.011A	CF203
AZ 453.05A	CF382
AZU 453.04	CF381
ZF00791462	CT012
ZF00791737	CT011
ZF09937665	PF031
ZF09937777	CF270
ZF09938829	PF031
ZF09938868	CF157
ZF09942427	CF306

DACIA

Ad. OE	FRITECH ref.
44 10 047 31R	CF873
44 10 061 76R	CF904
60 01 547 632	CF161
60 01 547 857	PF710
60 01 547 858	PF617
60 01 548 946	PF617
60 01 549 120	PF899
60 01 549 706	CF854
60 01 549 707	CF869
60 01 551 028	PF710
60 01 551 029	PF617
60 01 551 313	PF971
60 01 551 314	PF972
60 01 551 410	CF870
77 01 044 850	CF144
77 01 047 838	CF256
77 01 070 668	CF144

DACIA LCV

Ad. OE	FRITECH ref.
60 01 549 706	CF854
60 01 551 314	PF972

DAEWOO

Ad. OE	FRITECH ref.
426253	PF448
426296	PF448
426299	PF444
426319	PF448
426321	PF448
426322	PF448
426383	PF449
426503	PF449
426504	PF449
426505	PF452
426506	PF452
426507	PF444
426570	PF448
426571	PF448
426695	PF443
426696	PF442
427767	PF442
427768	PF443
427771	PF443
431335	CF864
483 120 50 00	CF095
53410-70B11	CF321
53420-70B11	CF322
558101	PF168
90235420	CF009
90235422	CF074
90581456	CF320
93740568	CF864
93741035	PF442
93741036	PF443
96276314	PF452
96312155	CF679
96316435	PF442
96316463	PF443
96320670	CF678
96418831	PF871
96518606	CF678
96574718	CF074
96860200	CF678

DAEWOO LCV

Ad. OE	FRITECH ref.
426695	PF443
426696	PF442
427767	PF442
427768	PF443
427771	PF443
93741035	PF442
93741036	PF443
96316435	PF442
96316463	PF443
96320670	CF678
96518606	CF678

DAF TRUCK

Ad. OE	FRITECH ref.
1560029	CF209
17H8152	CF191
702663063	CF076
GWC 1101	CF262
GWC 1102	CF191
RTC3624	CF163
RTC4454	CF202

DAIHATSU

Ad. OE	FRITECH ref.
47201-87407	PF938
47201-97242	PF963
47550-09101	CF827
47550-12060	CF346
47550-19135	CF346
47550-19165	CF412
47550-29026	CF346
47550-29033	CF346
47550-29115	CF346
47550-87228	CF968
47550-87401	CF823
47550-87508	CF324
47550-87517	CF1024
47550-87705	CF241
47550-87711	CF988
47550-97203	CF971
47550-97204	CF985
47550-B1010	CF788
47550-B2020	CF968
47550-B4010	CF798
47560-87508	CF971
47560-87520	CF980
47560-97504	CF980
47560-B2010	CF980
47560-B5010	CF976
47570-87401	CF824
47570-87704	CF307
47570-87708	CF987

CROSS REFERENCES LIST

DAIHATSU

Ad. OE	FRITECH ref.
47570-B1010	CF580

DAIHATSU LCV

Ad. OE	FRITECH ref.
47550-87508	CF324

DODGE

Ad. OE	FRITECH ref.
05191305AA	CF994
4126780	CF402
4238701	CF402
4238706	CF929
4313056	CF319
4762296	CF402
5175093AA	PF940
5204338	CF402
68004467AA	PF939
68004467AB	PF939
68004467AC	PF939
68004467AD	PF939
MA180750	CF378
MA180751	CF399
MB004040	CF379
MB004041	CF398
MB058553	CF269
MB128624	CF269
MB134828	CF398
MB134829	CF399
MB193411	CF269
MB500482	CF398
MB500483	CF399

DODGE TRUCK

Ad. OE	FRITECH ref.
1799628	CF950
1799629	CF949
18020674	CF954
18029766	CF954
2346825	CF950
2346826	CF949
2620735	CF436
2620736	CF437
3146138	CF436
3146139	CF437
3196564	CF436
3196565	CF437
3203311	CF436
3203312	CF437
3492674	CF437
3492675	CF436
3633517	CF950
3633518	CF949
4088892	CF437
4088893	CF436
4088898	CF950
4088899	CF949
4126780	CF402
4238701	CF402
4313056	CF319
4486528	CF949
4713348	CF437
4713349	CF436
4761602	CF954
4761748	CF437
4761749	CF436
4762296	CF402
52000848	CF437
52000849	CF436
5204338	CF402
5461450	CF949
5461451	CF950
8952000848	CF437
8952000849	CF436
922821	CF949
922822	CF950
E0ZZ2261A	CF783
E0ZZ2262A	CF783
J8126714	CF437
J8126715	CF436
MB238510	CF299
MB238511	CF298
MB500484	CF299
MB500485	CF298

FIAT

Ad. OE	FRITECH ref.
1487399080	PZ130
4054713	CF594
4057023	CF328
4057025	CF329
4057026	CF590
4065993	CZ005
4120689	CF281
4121616	CF002
4121621	CF591
4139481	CF589
4139486	CF590
4139490	CF487
4139493	CF281
4139496	CF590
4156086	PF016
4156087	PF016
4159759	CF487
4168151	PF011
4171016	PF012
4184518	PF015
4188216	CZ005
4188216G	CZ101
4188225	PF073
4188357	PF015
4188535	PF010
4189021	PF073
4190178G	PZ111
4191164	CZ005
4203721	PF073
4208251	PZ010
4210962	PF011
4210963	PF012
4218319	PF010
4231433	PF073
4231435	PF015
4231877	PF013
4239978	PF013
4242011	PF013
4242158	CF594
4264373	PF044
4264934	PF044
4270673	PF010
4277188	CF593
4285587	PF013
4291870	PF046
4292617	PF016
4297870	PF046
4298756	CF592
4306333	PF073
4322010	CF259
4335748	PF072
4337695	PZ004
4340183	PF014
4340184	PF048
4341665	PF013
4341759	PF014
4341780	PF015
4341935	PF014
4341995	PF013
4342112	PF044
4342465	PF044
4343377	PF474
4343378	PF474
4347257	PF075
4347258	CF002
4362473	PF068
4363679	PF073
4368051	PF044
4368052	PF044
4372983	PF013
4372984	PF014
4373350	PF015
4373438	PF048
4373614	CF002
4373638	PF072
4373639	PF073
4373680	PF015
4373736	CF595
4374057	CF590
4374060	CF259
4374063	CF589
4374129	PF045
4374310	CF328
4374582	CF329
4374780	PF044
4374781	PF044
4379293	PF044
4379471	CF591
4379876	CT001
4381246	CF354
4382235	PF051
4382336	PF014
4394440	PF047
4394441	PF072
4394459	CF329
4394460	CF002
4394464	CF594
4394465	CF328
4394466	CF259
4394467	CF487
4394469	CF595
4394470	CF487
4394596	PF004
4394597	PF004
4394780	PF044
4394890	PF044
4394899	PF044
4394900	PF003
4394902	PF474
4395137	PF015
4396086	PF044
4396104	CF354
4396982	PF047
4398074	CT001
4398076	CT002
4398200	PF044
4398743	PF044
4401934	PF049
4404483	CF347
4404484	CF347
4410501	PF047
4410502	PF047
4410503	PF050
4412800	PZ004
4412833	PF016
4423942	PF074
4447257	PF075
4462791	CT005
4464082	PF051
46421937	CZ023
46421941	CZ070
46421943	CZ072
46424868	PZ032
46478560	PZ067
46478563	PZ032
46531635	CZ023
46535126	PF042
46540826	PZ038
46543441	PZ039
46741476	PF236
46749276	PZ090
46755264	CZ116
46814638	PF630
46818745	PZ072
46819820	PZ071
46823569	PF795
51726720	PF795
51726721	PF630
51800566	PF847
55187210	PZ038
55187214	PZ071
55189156	PZ039
55189163	PZ072
55190993	PZ146
55196174	PZ039
55196176	PZ072
55196182	PZ090
55196254	PZ071
55196255	PZ072
5948919	PF086
5950290	PF075
5987894	PF086
5987896	CF216
5992891	PF086
60811771	CZ024
60815246	CZ023
7032156	PF116
7074619	PF023
7075444	PF187
7075920	PF186
7077696	PF187
7077697	PF186
7078624	CF315
7078627	PF190
7078629	PF229
7078823	PF232
7079433	PF232
7079435	PF233
7081423	CF583
7081575	CF583
7081967	PF023
7082150	CF327
7082215	PF263
7082220	PF264
71737949	CF141
71737950	CF135
71737951	CF135
71737952	CF067
71737954	CF116
71737956	CF132
71737957	CF130
71737958	CF778
71738321	CF079
71738324	CF004
71738325	CF101
71738326	CF094
71738328	CF004
71738329	CF002
71738443	PF009
71738444	PF006
71738446	PF006
71738467	CZ023
71738468	CZ023
71739127	PF187
71739128	PF023
71739129	PF190
71739591	PF232
71739592	PF042
71739993	PF091
71739995	PF203
71739998	PF186
71739999	PF218
71740002	PF217
71740005	PF034
71740006	PF004
71740008	PF018
71742785	PF848
71742786	PF849
71742838	CF808
71747150	PZ145
71750427	PF849
71752426	PF848
71753010	CF182
71768051	PZ145
71768365	PZ145
71768649	CF808
7611100	PF010
7613105	PF050
7621101	CF002
7631110	CT001
7651142	PF034
7692964	PF034
7696710	CF004
7708289	PZ060
7729634	CF141
7734997	CF067
77362099	PF543
77362164	PF630
77362384	PF542
77362404	PF539
77362405	PF540
77362445	CF790
77362463	CF778
77362469	PF500
77362514	PF544
77362518	PF545
77362526	PF546
77362544	PF186
77362610	CF067
77362724	PF841
77363348	PF839
77363349	PF840
77363612	PF520
77363619	PF521
77363849	CF827
77363860	PF700
77363866	PF699
77363965	PF842
77363967	PF843
77363969	PF844
77363970	PF847
77364028	CF829
77364194	PF700
77364196	PF699
77364197	PF858
77364467	PF845
77364472	PF937
77364499	PF841
77364611	PF847
77364659	PF846
77364662	PF704
77364809	PF847
77364950	PF793
77365228	PF914
77365230	PF912
77365231	PF913
77365348	CF865
77365594	PF845
77365715	PF700
77365803	CF866
77365835	PF700
77365867	PF913
77365868	PF912
77367100	CF1019
77367389	CF865
7740758	CF130
7757604	CF135
7759547	PZ034
7767150	PF006
790164	CF351
790204	PF050
790205	PF051
790215	CF002

FIAT

Ad. OE	FRITECH ref.
790417	CF357
790513	PF047
790519	PF047
790607	CT007
790608	PF053
790610	CF201
790650	CT002
790663	PF072
790665	CF259
790833	CF004
790837	PF053
790838	PF053
790853	CF595
790860	PF074
790981	CT008
790996	CT005
791113	CF070
791159	CF347
791164	PF052
791193	PF074
791440	PF017
791456	CT006
791459	CT001
791460	CT002
791475	CT004
791487	PF294
792040	PF009
792088	PF018
792218	CT008
792722	PF018
792895	PF009
792915	PF018
792987	PF050
792999	PF017
793007	PF018
793010	PF018
793034	PF053
793039	PF053
793040	PF052
793053	PF053
793141	PF072
793143	PF047
793148	PF047
793193	PF074
793244	PF294
793266	PF006
793289	PF045
793289	PF073
793290	PF015
793291	PF045
793294	PF474
793298	PF015
793301	PF044
793302	PF044
793304	PF003
793305	PF013
793307	PF004
793309	PF004
793332	PF014
793437	CF079
793438	CF100
793439	CF101
793604	PF132
793962	PF132
795621	PF006
82409600	CZ011
82442897	PZ015
870832	CF329
891486	CF329
9292865	CF329
9463378380	PF429
9463378480	PF464
9566949780	CF094
9567205380	PF218
9567205480	PF217
9626813180	CZ103
9635975480	CZ103
9641622380	CZ103
9682650080	CZ103
973988	CF590
974254	CF329
974349	CF328
98845053	CF327
98845068	CF135
9939672	PF091
9939963	PF203
9941368	PF203
9943705	PF091
9944386	PF042
9945379	CF004
9945760	PF042
9945762	PF042
9945980	CF090
9947094	CF116
9947098	PF006
9947099	PF042
9947161	CF132
9947943	CF135
9948195	CF116
9948232	CF004
9948315	PF042
9948361	CF151
9948369	CF255
9948533	PF339
9948580	PF235
9948585	PF235
9948586	PF236
9948931	CF778
9949303	PF481
9949305	PF482
9949542	PF536
9949543	PF525
9949545	PF320
9949546	PF320
9949547	PF532
9949548	PF532
9950677	PF042
9950817	CF130
LF168102.00	PF003

FIAT LCV

Ad. OE	FRITECH ref.
1315251080	CT016
1331560080	PZ144
1487399080	PZ130
3980011	CF002
4054713	CF594
4065993	CZ005
4121616	CF002
4139490	CF487
4156086	PF016
4156087	PF016
4159759	CF487
4168352	CF330
4188216	CZ005
4188216G	CZ101
4190178G	PZ111
4191164	CZ005
4208251	PZ010
4242158	CF594
4277473	CT003
4292617	PF016
4347257	PF075
4347258	CF002
4373614	CF002
4379876	CT001
4394460	CF002
4394464	CF594
4394467	CF487
4394470	CF487
4397952	CF330
4398074	CT001
4410503	PF050
4412833	PF016
4447257	PF075
46421943	CZ072
46535126	PF042
46540826	PZ038
46741476	PF236
46749276	PZ090
46755264	CZ116
55187210	PZ038
55190993	PZ146
55196181	PZ144
55196182	PZ090
55235402	PZ144
5950290	PF075
5987896	CF216
7074619	PF023
7075444	PF187
7075920	PF186
7077609	CF094
7077696	PF187
7077697	PF186
7078823	PF232
7079433	PF232
7079435	PF233
7079934	PF237
7081967	PF023
7082150	CF327
7082215	PF263
7082220	PF264
71736191	PZ144
71737949	CF141
71737950	CF135
71737951	CF135
71737952	CF067
71737954	CF116
71737958	CF778
71738321	CF079
71738324	CF004
71738326	CF094
71738328	CF004
71738329	CF002
71738443	PF009
71738446	PF006
71739127	PF187
71739128	PF023
71739591	PF232
71739592	PF042
71739992	PF197
71739995	PF203
71739996	PF196
71739998	PF186
71740005	PF034
71740008	PF018
7545170	PF029
7613105	PF050
7621101	CF002
7631110	CT001
7651142	PF034
7692964	PF034
7696710	CF004
7713643	PF029
7729634	CF141
7734997	CF067
77362099	PF543
77362164	PF630
77362384	PF542
77362463	CF778
77362469	PF500
77362514	PF544
77362518	PF545
77362526	PF546
77362724	PF841
77363849	CF827
77363860	PF700
77363866	PF699
77363965	PF842
77363967	PF843
77363969	PF844
77363970	PF847
77364028	CF829
77364118	PF874
77364121	PF875
77364123	PF876
77364125	PF724
77364194	PF700
77364197	PF858
77364205	PF874
77364206	PF875
77364207	PF876
77364499	PF841
77364659	PF846
77364703	PF793
77365228	PF914
77365230	PF912
77365231	PF913
77365348	CF865
77365715	PF700
77365803	CF866
77365835	PF700
77365867	PF913
77365868	PF912
77367389	CF865
7757604	CF135
7767150	PF006
777364196	PF699
790049	CF002
790204	PF050
790215	CF002
790520	CT003
790608	PF053
790616	CF270
790833	CF004
790837	PF053
790838	PF053
791440	PF018
791456	CT006
791459	CT001
791461	CT003
791462	CT012
791737	CT011
792040	PF009
792722	PF018
792895	PF009
792915	PF018
792987	PF050
793007	PF018
793010	PF018
793034	PF053
793039	PF053
793053	PF053
793266	PF006
793437	CF079
793604	PF132
793962	PF132
795621	PF006
82409600	CZ011
82442897	PZ015
9463378380	PF429
9463378480	PF464
9467547580	PF877
9467547680	PF878
9467549588	CF830
9566949780	CF094
9567211580	PF197
9567211680	PF196
98845053	CF327
98845068	CF135
9937665	PF031
9937777	CF270
9938829	PF031
9938868	CF157
9939963	PF203
9940554	CF157
9940558	CF210
9941368	PF203
9944386	PF042
9945379	CF004
9945760	PF042
9945762	PF042
9945891	CF182
9945895	CF183
9945896	CF181
9945910	CF306
9945911	CF157
9945939	CF210
9945980	CF090
9946048	PF207
9946054	PF205
9946055	PF210
9946056	PF208
9946385	PF031
9946799	PF209
9946800	PF206
9947094	CF116
9947098	PF006
9947099	PF042
9947943	CF135
9948195	CF116
9948232	CF004
9948315	PF042
9948361	CF151
9948369	CF255
9948586	PF236
9948877	PF208
9948882	PF205
9948883	PF208
9948931	CF778
9949303	PF481
9949305	PF482
9949459	CF182
9949542	PF536
9949543	PF525
9949547	PF532
9949548	PF532
9949588	PF526
9949592	PF547
9950677	PF042

FORD AUSTRALIA

Ad. OE	FRITECH ref.
9DA-2261B	CF734
CH-2261A	CF732
P10036 (PBR ref.)	CF732
P5744 (PBR ref.)	CF734

FORD BRASIL

Ad. OE	FRITECH ref.
E8BZ2261A	CF302
E8BZ2261B	CF302
F0BZ2261A	CF302

FORD EUROPE

Ad. OE	FRITECH ref.
1006011	CF085
1006012	CF095
1006013	CF007
1006016	CF075
100E2062B	CF192
1011360	PF305
1015249	PF397
1015250	PF307
1015251	PF394
1015252	PF398
1019627	PF228
1019628	PF230
1025055	PF254

CROSS REFERENCES LIST

Ad. OE	FRITECH ref.
FORD EUROPE	
1028404	**PF490**
1037718	**PZ092**
1047626	**PF600**
1054047	**PZ092**
105E2261	**CF261**
1064282	**PF479**
1064284	**PF247**
1064291	**PZ118**
1073706	**PZ119**
1076417	**PZ091**
1092259	**PZ092**
1094179	**PF479**
1100548	**PF480**
1104131	**CF786**
1104132	**CF721**
1106077	**CF581**
1106628	**PF983**
1111150	**PF822**
1113641	**CF096**
1113980	**CF095**
1115986	**CF136**
1120841	**PF480**
1126532	**CF085**
1133522	**PZ118**
1134816	**PF560**
113E2261	**CF335**
1140628	**PF604**
1144620	**PF604**
1145295	**CF552**
1146125	**PF531**
1146127	**PF528**
1218798	**PF693**
1218799	**PF693**
1219805	**PZ119**
1223475	**PF581**
1223483	**PF581**
1223491	**CF804**
1306698	**PZ118**
1325337	**PF693**
1325339	**PF693**
1385739	**CF804**
1430782	**PF528**
1430784	**PF693**
1454548	**PF933**
1454549	**PF932**
1455996	**CF997**
1456989	**PF581**
1469140	**PF867**
1470050	**CF417**
1517558	**CF007**
1517559	**CF075**
1522960	**CF552**
1547478	**PF867**
1550271	**CF853**
1554724	**CF067**
1563530	**PF105**
1583215	**PF105**
1583479	**PF104**
1595062	**PF932**
1604645	**CF486**
1613087	**PF087**
1613463	**PF121**
1619137	**CF082**
1619138	**CF006**
1619189	**PF145**
1625132	**CF108**
1630359	**CF082**
1630360	**CF006**
1670168	**PF933**
1691070	**CF909**
1708513	**CF192**
1708706	**CF261**
1713760	**CF866**
1717333	**CF1010**
1717334	**CF997**
1735964	**PF693**
1737066	**CF335**
1756242	**CF909**
1782880	**CF1014**
1802625	**CF853**
1954497	**CF184**
1954498	**CF247**
1M517A543AA	**PZ118**
2T142261AA	**CF804**
3632082	**CF627**
3632300	**CF627**
3688231	**CZ129**
4176693	**PF931**
4539823	**PF931**
553750	**CF340**
6009659	**CF085**
6020783	**CF355**
6023398	**CF196**
6023399	**CF358**
6025668	**CF076**
6028053	**CF355**
6032983	**CF369**
6035875	**CF003**
6035876	**CF356**
6039406	**CF376**
6039407	**CF375**
6046469	**PF087**
6046469	**PF107**
6046470	**PF087**
6057063	**PF107**
6063234	**CF003**
6063235	**CF356**
6067715	**PF107**
6069633	**PF105**
6078741	**CF355**
6079641	**CF355**
6079642	**CF003**
6079643	**CF356**
6081237	**PF096**
6088234	**CF095**
6090605	**CF003**
6090606	**CF356**
6096066	**CF200**
6102078	**PF094**
6118143	**PF032**
6118144	**PF098**
6123361	**PF108**
6136543	**PF146**
6136834	**PF095**
6136835	**PF095**
6164952	**CF297**
6185943	**PF147**
6187600	**CF071**
6187601	**CF109**
6187602	**CF186**
6196051	**CF085**
6196052	**CF075**
6196053	**CF095**
6508824	**CF096**
6581520	**PF148**
6581521	**PF149**
6677340	**PF228**
6789916	**PZ092**
6808555	**CF096**
6808556	**CF097**
6808557	**CF136**
6842331	**PF148**
6922548	**PF148**
6922549	**PF149**
6974959	**PF230**
6M342261AA	**CF997**
6M342261AB	**CF997**
7090606	**CF356**
7100750	**PF148**
7117257	**CF124**
7200918	**PF309**
7200920	**PF253**
7281468	**PF308**
72GB2261BA	**CF007**
72GB2261CA	**CF085**
72GB2661AA	**CF075**
7317054	**PZ091**
74BB2261AB	**CF355**
74E52261AA	**CF076**
75AB2061BA	**CF369**
75AB2061CA	**CF376**
75AB2062CA	**CF375**
75AB2261BA	**CF358**
77EB2261AA	**CF003**
77FB2261AD	**CF003**
81AB2140BB	**PF096**
81AB2261AA	**CF095**
82FB2261AA	**CF486**
83BB2140SA	**PF032**
83BB2261BA	**CF200**
84FB2261AC	**CF082**
84FB2261BA	**CF108**
84FB2261BC	**CF006**
86AB2140AA	**PF146**
87BB2261AA	**CF297**
89AB2140DA	**PF147**
89FB2261AB	**CF071**
89FB2261CB	**CF109**
91AB2140AA	**PF148**
91AB2140EA	**PF148**
91AB2140FA	**PF149**
91AB2140FC	**PF149**
91AB2261AA	**CF085**
91AB2261BA	**CF075**
91AB2261CA	**CF095**
93BB2261BC	**CF096**
93BB2261BD	**CF096**
93BB2261EC	**CF136**
93BB2261EC	**CF096**
93BB2B507AA	**PF228**
94BB7A543AA	**PZ092**
94BB7A543AB	**PZ092**
94BB7A543AC	**PZ092**
94BB7A543AD	**PZ092**
94FB2261AA	**CF124**
95VW7A543BC	**PZ091**
95VW7A543BD	**PZ091**
96FB2261BA	**CF075**
97BB2B507AA	**PF228**
97BB2B507BA	**PF230**
97KB2140AB	**PF490**
98AB7A543AF	**PZ118**
9S512261AA	**CF067**
AS51-2261-AA	**CF866**
BV612261AA	**CF909**
D0RY2261A	**CF417**
D8RZ2261B	**CF003**
E5RY2261A	**CF095**
F5RZ2261B	**CF136**
F5RZ7A543A	**PZ092**
GWC1511	**CF076**
XS2Z7A543AC	**PZ092**
XS2Z7A543AD	**PZ092**
YC152261AA	**CF180**
YS412B507AB	**PF480**
YS4Z2004AA	**PF247**
YS4Z2261AA	**CF085**
YS512261AA	**CF581**
FORD LCV	
1006011	**CF085**
1006012	**CF095**
1006013	**CF007**
1006016	**CF075**
1011360	**PF305**
1015251	**PF394**
1015251	**PF397**
1047659	**PF602**
1047660	**PF390**
1073706	**PZ119**
1104131	**CF786**
1104132	**CF721**
1106629	**PF603**
1126532	**CF085**
1133442	**CF095**
1145295	**CF552**
1146125	**PF531**
1146127	**PF528**
1218798	**PF693**
1218799	**PF693**
1219805	**PZ119**
1223491	**CF804**
1325337	**PF693**
1325339	**PF693**
1385739	**CF804**
1430782	**PF528**
1430784	**PF693**
1454548	**PF933**
1454549	**PF932**
1455996	**CF997**
1456989	**PF581**
1469140	**PF867**
1470050	**CF417**
1517558	**CF007**
1517559	**CF075**
1522960	**CF552**
1547478	**PF867**
1550271	**CF853**
1554724	**CF067**
1563530	**PF105**
1583215	**PF105**
1583479	**PF104**
1595062	**PF932**
1604645	**CF486**
1613087	**PF087**
1613463	**PF121**
1619137	**CF082**
1619138	**CF006**
1619189	**PF145**
1625132	**CF108**
1630359	**CF082**
1630360	**CF006**
1670168	**PF933**
1691070	**CF909**
1708513	**CF192**
1708706	**CF261**
1713760	**CF866**
1717333	**CF1010**
1717334	**CF997**
1736265	**PF898**
1736325	**CF1015**
2696472	**CF335**
2950E226HD	**CF388**
2T142261AA	**CF804**
32673147	**CF196**
3632082	**CF627**
3632300	**CF627**
4055730	**CF180**
4059371	**PF558**
4059372	**PF574**
4387348	**CF839**
4525694	**PF558**
4525696	**PF574**
4641633	**CF419**
5039062	**CF839**
6009659	**CF085**
6023398	**CF196**
6025668	**CF076**
6035875	**CF003**
6035876	**CF356**
6039406	**CF376**
6039407	**CF375**
6046019	**CF274**
6046020	**CF525**
6046022	**CF275**
6046023	**CF524**
6046469	**PF107**
6057063	**PF107**
6063234	**CF003**
6063235	**CF356**
6067715	**PF107**
6079642	**CF003**
6079643	**CF356**
6083234	**PF097**
6083866	**PF150**
6083867	**PF151**
6083868	**PF152**
6088234	**CF095**
6090605	**CF003**
6090606	**CF356**
6123361	**PF108**
6136834	**PF095**
6136835	**PF095**
6150106	**CF175**
6150107	**CF219**
6150108	**CF451**
6150109	**CF285**
6150110	**CF221**
6150111	**CF450**
6150112	**CF284**
6150113	**CF220**
6151043	**PF154**
6151044	**PF036**
6151045	**PF153**
6151046	**PF037**
6182643	**CF223**
6182644	**CF222**
6185943	**PF147**
6187600	**CF071**
6187602	**CF186**
6196051	**CF085**
6196052	**CF075**
6196053	**CF095**
6397977	**CF261**
6464704	**CF178**
6464705	**CF179**
6464706	**CF180**
6581520	**PF148**
6581521	**PF149**
6754692	**PF043**
6842331	**PF148**
68VB2261BA	**CF068**
68VB2261DB	**CF208**
6922548	**PF148**
6922549	**PF149**
6C112K478BC	**PF898**
7034902	**PF043**
7080017	**CF335**
7090606	**CF356**
7281468	**PF308**
72GB2261CA	**CF085**
72GB2661AA	**CF075**
72VB2061BB	**CF414**
72VB2061DB	**CF386**
72VB2062BB	**CF415**
72VB2062DB	**CF387**
73VB2261AB	**CF202**
74E52261AA	**CF076**
74VB2261AA	**CF388**
75AB2061CA	**CF376**
75AB2062CA	**CF375**
76UB2261CA	**CF525**
76UB2262CA	**CF524**
76VB2261BA	**CF274**
76VB2262BA	**CF275**
77EB2261AA	**CF003**
77FB2261AD	**CF003**
80VB2A032AA	**PF150**
80VB2A032BA	**PF151**
80VB2A032CA	**PF152**
80VB2A032GA	**PF151**

FORD LCV

Ad. OE	FRITECH ref.
80VB2A032HA	PF152
80VB2A032JA	PF150
81AB2140DB	PF097
81AB2261AA	CF095
84FB2261AC	CF082
84FB2261BC	CF006
86VB2261AA	CF175
86VB2261BA	CF219
86VB2261CA	CF451
86VB2261DA	CF285
86VB2261EA	CF221
86VB2262CA	CF450
86VB2262DA	CF284
86VB2262FA	CF220
86VB2A032AA	PF154
86VB2A032BA	PF036
86VB2A032CA	PF153
86VB2A032DA	PF037
8849646	CF424
88VB2261AA	CF223
88VB2262AA	CF222
89AB2140DA	PF147
89FB2261AB	CF071
91AB2140AA	PF148
91AB2140EA	PF148
91AB2140FA	PF149
91AB2140FC	PF149
91AB2261AA	CF085
91AB2261BA	CF075
91AB2261CA	CF095
92VB2004AA	PF043
92VB2261AA	CF178
92VB2261BA	CF179
92VB2261CA	CF180
96FB2261BA	CF075
D8RZ2261B	CF003
E5RY2261A	CF095
GWC1102	CF191
GWC1103	CF348
YC152K478AA	PF558
YC152K478AB	PF558
YC152K478BA	PF574
YC152K478BB	PF574
YS4Z2261AA	CF085

FORD USA

Ad. OE	FRITECH ref.
8M2261A	CF950
8M2262A	CF949
937959	CF747
937960	CF748
C20Z2261B	CF437
C20Z2262B	CF436
C2SZ2261A	CF609
C2VY2261A	CF610
C2VY2262A	CF609
C30Z2261A	CF610
C30Z2262A	CF609
C3AZ2261A	CF610
C3AZ2261B	CF437
C3AZ2262A	CF436
C3AZ2262A	CF609
C4TZ2261A	CF437
C4TZ2262A	CF436
C5TZ2261C	CF950
C5TZ2261D	CF748
C5TZ2262A	CF949
C5TZ2262B	CF747
C60Z2261A	CF437
C60Z2262A	CF436
C6TZ2261A	CF610
C6TZ2262A	CF609
C7AZ2261A	CF610

FORD USA TRUCK

Ad. OE	FRITECH ref.
C7AZ2261C	CF610
C7AZ2262A	CF609
C7AZ2262C	CF609
C9AZ2261A	CF950
C9AZ2262A	CF949
D1AZ2261A	CF610
D1AZ2262A	CF609
D20Z2261A	CF610
D20Z2261B	CF610
D20Z2262A	CF609
D20Z2262B	CF609
D2SZ2261A	CF950
D2SZ2262A	CF949
D2ZZ2262A	CF436
D30Z2261C	CF610
D30Z2261D	CF950
D30Z2262C	CF609
D30Z2262D	CF949
D3SZ2261A	CF950
D3SZ2262A	CF949
D3TZ2261A	CF437
D3TZ2261B	CF610
D3TZ2262A	CF436
D3TZ2262B	CF609
D3ZZ2261A	CF437
D3ZZ2262A	CF436
D5DZ2261A	CF610
D5DZ2262A	CF609
D6TZ2261A	CF748
D6TZ2262A	CF747
E0ZZ2261A	CF783
E0ZZ2262A	CF783
E1FZ2261A	CF433
E1FZ2262A	CF588
E2FZ2261A	CF433
E2FZ2262B	CF588
E2TZ2261B	CF748
E2TZ2262B	CF747
E3TZ2261B	CF550
E43Z2261A	CF723
E43Z2262A	CF722
E4TZ2261A	CF551
E5SZ2261A	CF768
E5SZ2262A	CF767
E6DZ2261A	CF751
E92Z2261A	CF236
E9SZ2261A	CF958

Ad. OE	FRITECH ref.
C7AZ2261C	CF610
C7AZ2262A	CF609
C7AZ2262C	CF609
C9AZ2261A	CF950
C9AZ2262A	CF949
D1AZ2261A	CF610
D1AZ2262A	CF609
D20Z2261A	CF610
D20Z2261B	CF610
D20Z2262A	CF609
D20Z2262B	CF609
D2SZ2261A	CF950
D2SZ2262A	CF949
D2ZZ2262A	CF436
D30Z2261C	CF610
D30Z2261D	CF950
D30Z2262C	CF609
D30Z2262D	CF949
D3SZ2261A	CF950
D3SZ2262A	CF949
D3TZ2261A	CF437
D3TZ2261B	CF610
D3TZ2262A	CF436
D3TZ2262B	CF609
D3ZZ2261A	CF437
D3ZZ2262A	CF436
D5DZ2261A	CF610
D5DZ2262A	CF609
D6TZ2261A	CF748
D6TZ2262A	CF747
E2TZ2261B	CF748
E2TZ2262B	CF747
E3TZ-2261B	CF550
E4TZ-2261A	CF551
E99Z2261A	CF962

FSO

Ad. OE	FRITECH ref.
4065993	CZ005
4121616	CF002
4188216	CZ005
4188216G	CZ101
4188225	PF073
4189021	PF073
4190178G	PZ111
4191164	CZ005
4203721	PF073
4208251	PZ010
4231433	PF073
4231877	PF013
4239978	PF013
4242011	PF013
4277188	CF593
4285587	PF013
4298756	CF592
4306333	PF073
4341665	PF013
4341995	PF013
4347258	CF002
4363679	PF073
4372983	PF013
4373614	CF002
4373639	PF073
4373736	CF595
4374129	PF045
4379876	CT001
4394460	CF002
4394469	CF595
4394596	PF004
4394597	PF004
4398074	CT001
7621101	CF002
7631110	CT001
790215	CF002
790853	CF595
791459	CT001

Ad. OE	FRITECH ref.
793289	PF045
793289	PF073
793291	PF045
793305	PF013
793307	PF004
793309	PF004

GEO

Ad. OE	FRITECH ref.
94133703	CF621
94362829	CF619
94843771	CF215
94843772	CF214
94847494	CF214
94847495	CF215
94851529	CF214
94851530	CF215
94853016	CF214
94853017	CF215
94855769	CF214
94855770	CF215
96052368	CF301
96058764	CF468
96058765	CF467
96060654	CF291
96064826	CF513
96064827	CF303

GMC TRUCK

Ad. OE	FRITECH ref.
18001997	CF932
18003743	CF928
18003905	CF946
18004609	CF942
18004793	CF932
18004794	CF941
18004880	CF931
18004888	CF934
18004890	CF931
18007980	CF928
18008056	CF928
18009377	CF935
18012273	CF947
18012303	CF928
18012305	CF935
18013954	CF960
18013956	CF961
18014081	CF959
18017570	CF762
18020674	CF954
18029766	CF954

HONDA

Ad. OE	FRITECH ref.
43030-SP8-000	CF234
43031-SP8-000	CF235
43033-SE1-000	CF508
43300-634-003	CF400
43300-634-670	CF344
43300-671-601	CF401
43300-671-632	CF435
43300-671-633	CF435
43300-680-931	CF344
43300-692-003	CF461
43300-692-013	CF409
43300-QH5-003	CF759
43300-S04-003	CF497
43300-S10-003	CF819
43300-S1A-E61	CF791
43300-S3Y-003	CF814
43300-S5A-003	CF576
43300-S6A-J51	CF676

Ad. OE	FRITECH ref.
43300-SA3-681	CF207
43300-SAA-G01	CF553
43300-SB0-671	CF461
43300-SB2-003	CF207
43300-SE0-003	CF439
43300-SE0-013	CF439
43300-SH3-J01	CF463
43300-SH5-003	CF462
43300-SH5-013	CF499
43300-SJ8-003	CF809
43300-SM4-A01	CF497
43300-SM5-A01	CF616
43300-SR3-003	CF463
43300-ST3-E01	CF253
43301-692-003	CF408
43301-S04-003	CF498
43301-S10-003	CF820
43301-S1A-E61	CF792
43301-S5A-003	CF574
43301-S6A-J51	CF556
43301-SA3-681	CF206
43301-SB2-003	CF206
43301-SH3-J01	CF464
43301-SJ8-003	CF810
43301-SM4-A01	CF498
43301-SM5-A01	CF617
43301-SR3-003	CF464
43301-ST3-E01	CF252
46100-692-003	PF181
46100-692-013	PF181
46100-692-872	PF181
46100-S04-A02	PF586
46100-S04-A13	PF587
46100-S04-A14	PF587
46100-S04-A53	PF374
46100-S04-J01	PF902
46100-S04-J02	PF902
46100-S04-J04	PF902
46100-S1A-G02	PF515
46100-S6D-G01	PF510
46100-S6D-R01	PF509
46100-S6F-G02	PF516
46100-S9A-013	PF942
46100-S9A-G51	PF510
46100-SA5-003	PF130
46100-SA5-013	PF130
46100-SA5-023	PF130
46100-SAA-G51	PF514
46100-SAA-G52	PF514
46100-SD2-A01	PF184
46100-SD4-802	PF256
46100-SE0-013	PF184
46100-SE0-901	PF184
46100-SE0-903	PF184
46100-SH3-A04	PF182
46100-SH3-A05	PF182
46100-SH3-A06	PF182
46100-SM4-G54	PF255
46100-SNA-A01	PF943
46100-SR3-003	PF182
46100-SR3-013	PF182
46100-SR3-831	PF262
46100-SR3-832	PF262
46100-SR3-833	PF262
46101-SDC-A04	PF944
46920-S04-A01	PZ066
46920-S7A-A01	PZ154
46920-S7A-A02	PZ154
46920-S7A-A03	PZ154
46920-S7A-A04	PZ154
46920-SM4-A01	PZ065
46920-SM4-A02	PZ065
46920-SM4-A03	PZ065
46920-SR3-A01	PZ066
46920-ST7-A01	PZ152
46930-S5A-013	CZ114
46930-S7C-E01	CZ115
46930-S7C-E02	CZ115

CROSS REFERENCES LIST

Ad. OE	FRITECH ref.
HONDA	
46930-SNA-A41	CZ113
HONDA USA	
43300-S5A-003	CF576
43301-S5A-003	CF574
HYUNDAI	
41650-H1000	PZ153
41710-22650	CZ132
41710-22660	CZ132
41710-22700	CZ131
41710-24060	CZ125
41710-28000	CZ130
41710-28591	CZ130
41710-33040	CZ125
41710-33070	CZ125
41710-39001	CZ130
41710-H1070	CZ122
58320-4A000	CF847
58320-4A020	CF847
58320-4A210	CF816
58330-02000	CF585
58330-02010	CF585
58330-05500	CF855
58330-0P000	CF862
58330-11100	CF378
58330-1G000	CF834
58330-21010	CF469
58330-21300	CF269
58330-21320	CF471
58330-21321	CF471
58330-22000	CF710
58330-23300	CF472
58330-24002	CF538
58330-24003	CF538
58330-25000	CF252
58330-25200	CF585
58330-25300	CF585
58330-28001	CF311
58330-2D000	CF252
58330-2D020	CF252
58330-31010	CF095
58330-32300	CF547
58330-33100	CF511
58330-38010	CF253
58330-3A000	CF816
58330-H1030	CF983
58340-11100	CF379
58380-02000	CF586
58380-02010	CF586
58380-05500	CF859
58380-0P000	CF863
58380-21010	CF470
58380-22000	CF709
58380-24003	CF539
58380-25000	CF253
58380-25200	CF586
58380-25300	CF586
58380-28001	CF312
58380-2D000	CF253
58380-2D020	CF253
58380-32300	CF548
58380-38010	CF252
58380-3A000	CF817
58380-H1030	CF984
58420-4A000	CF848
58420-4A020	CF848
58420-4A210	CF817
58510-02000	PF518
58510-02330	PF856
58510-17000	PF519
58510-17300	PF632
58510-1C000	PF517
58510-1C005	PF517
58510-1C050	PF631
58510-1C055	PF631
58510-1G100	PF949
58510-1G250	PF923
58510-1H200	PF953
58510-25000	PF945
58510-25300	PF946
58510-29010	PF836
58510-29310	PF904
58510-2B800	PF950
58510-2C500	PF951
58510-2C520	PF951
58510-2E500	PF947
58510-3K300	PF948
59110-26050	PF576
6023399	CF358
6025668	CF076
74E52261AA	CF076
75AB2261BA	CF358
GWC 1820	CF007
HR232029	CF795
HR232030	CF986
HYUNDAI LCV	
58320-44020	CF836
58320-44210	CF712
58320-44220	CF712
58320-4A000	CF847
58320-4A020	CF847
58320-4A210	CF816
58330-3A000	CF816
58330-4H000	CF1004
58380-3A000	CF817
58420-44020	CF837
58420-44210	CF711
58420-44220	CF711
58420-4A000	CF848
58420-4A020	CF848
58420-4A210	CF817
IHC TRUCK	
1799628	CF950
1799629	CF949
2346825	CF950
2346826	CF949
3633517	CF950
3633518	CF949
4088898	CF950
4088899	CF949
4486528	CF949
5461450	CF949
5461451	CF950
922821	CF949
922822	CF950
INNOCENTI	
17H8152	CF191
37H2015	CF189
37H2016	CF190
37H4641	CF380
37H8597	CF341
557201118	CF341
557201119	CF002
5987896	CF216
6557201119	CF004
7074619	PF023
7077696	PF187
7081967	PF023
71739128	PF023
7696710	CF004
790833	CF004
9945379	CF004
9948232	CF004
GWC 1101	CF262
GWC 1102	CF191
GWC 1103	CF348
GWC 1126	CF341
GWC 1129	CF380
GWC 126	CF189
GWC 127	CF190
ISUZU	
18017570	CF762
8-94133703-2	CF621
8-94206594-0	CF644
8-94230541-1	CF237
8-94230541-5	CF237
8-94233500-3	CF287
8-94233500-4	CF287
8-94233500-5	CF287
8-94233500-6	CF287
8-94362829-0	CF619
8-97319300-0	CF815
D66670137	CF626
IVECO BUS	
2997347	PZ005
4065993	CZ005
4071472	CF475
4102475	CF476
4146275	CZ002
4164296	PF026
4181164	CZ005
4188216	CZ005
4188216G	CZ005
4188216G	CZ101
4191164	CZ005
4203195	CF477
4212449	CF478
4217815	PZ026
4219866	PZ008
4220643	CF188
4221755	CZ001
4221757	CZ002
4237415	PF027
4237418	PF028
42530542	PF204
4254480	PF099
4254725	CF332
42556837	PF984
42556838	PF985
42568306	PF986
4259694	CZ015
4269534	PF100
4270737	PZ007
4271838	CZ001
4271840	CZ002
4276036	CF169
4277619	PF101
4277623	PF102
4291534	CF534
4291542	CF535
4291923	PZ027
4292542	PZ001
4292543	PZ001
4294681	CF230
4295958	CZ014
4296247	CF293
4306986	CF756
4311345	CZ004
4311345G	CZ100
4317214	CF479
4324597	PF026
4398075	CT003
4657683	PZ002
4700150	PZ001
4710914	CF558
4712856	CF217
4717095	CT003
4720219	CF756
4720220	CF481
4723798	PF027
IVECO TRUCK	
2991743	PF204
2991745	PF538
2997347	PZ005
2997458	PZ006
2997503	CZ007
2997520	CF231
4065993	CZ005
4071472	CF475
4075358	PZ011
4102475	CF476
41211005	PZ093
41211006	PZ147
4122369	CF187
4122667	CF331
4122669	CF187
4146275	CZ002
4146276	CZ001
4161333	PZ007
4164296	PF026
4166208	PZ010
4181164	CZ005
4188216	CZ005
4188216G	CZ101
4189132	CZ004
4190178G	PZ111
4191164	CZ005
4203195	CF477
4208251	PZ010
4210961	PF101
4212449	CF478
4217815	PZ026
4219866	PZ008
4220639	CF170
4220641	CF333
4220643	CF188
4221755	CZ001
4221757	CZ002
4237415	PF027
4237418	PF028
42530542	PF204
4254480	PF099
4254725	CF332
42556837	PF984
42556838	PF985
42568306	PF986
4259694	CZ015
4269534	PF100
4270737	PZ007
4271838	CZ001
4271840	CZ002
4276036	CF169
4277619	PF101
4277623	PF102
4291534	CF534
4291542	CF535
4291923	PZ027
4292542	PZ001
4292543	PZ001
4294681	CF230
4295958	CZ014
4296247	CF293
4306986	CF756
4311345	CZ004
4311345G	CZ100
4317214	CF479
4324597	PF026
4398075	CT003
4657683	PZ002
4700150	PZ001
4710914	CF558
4712856	CF217
4717095	CT003
4720219	CF756
4720220	CF481
4723798	PF027
4726277	PF028
4726714	PZ028
4727624	CF231
4732110	PF026
4735277	CF536
4744164	CF231
4754206	PF026
4756967	CF756
4756968	CF481
4758288	PF103
4762814	PF026
4765078	PF027
4765079	PF028
4770993	CZ007
4774874	PZ006
4777521	CZ006
4792417	CT003
4792418	CT001
4797280	PF029
4797460	PF029
4797843	PF125
4797844	PF126
4797845	PZ005
4800161	PZ009
4802930	PF029
4804129	PF135
4804131	PF136
4804132	PF137
4817854	PF140
4837192	CF534
4837193	CF558
4837194	CF559
4837195	CF535
4844300	PF029
4848576	CZ007
4848578	CZ094
4853408	PZ018
4853409	PZ019
4854828	CZ012
4859829	CT013
500359653	PF511
500374416	PF465
504042984	PF465
504042985	PF511
504089710	PF465
504089711	PF511
60102881	CF535
60102882	CF534
60135419	PZ001
60188878	PF238
61590154	PZ021
7165213	CF188
790520	CT003
7984212	CF528
7984278	CF482
8121103	CF528
8121104	CF482
8121575	CF163
8121576	CF209
8122258	PF144
8123580	CF232
8193387	CF528
8194527	CF232
8604136	PZ120
9290536	PF101
93155720	CF232
93155721	CF528
93155722	CF482
93159002	CF208
93160540	CF208
98434065	PF238
98452387	CF310
99463713	PF238
99483920	PF465
9981629	PF144
9989017	PF025

Ad. OE	FRITECH ref.
JAGUAR	
CAC 1229	**PF090**
GMC 414	**PF090**
JEEP	
05191305AA	**CF994**
4423601	**CF695**
4761941	**PF810**
5066158AA	**CF956**
5072526AA	**PF981**
5072526AB	**PF981**
5175093AA	**PF940**
5252617	**CF695**
53001324	**CZ121**
68004467AA	**PF939**
68004467AB	**PF939**
68004467AC	**PF939**
68004467AD	**PF939**
8953001324	**CZ121**
JEEP USA	
2620735	**CF436**
2620736	**CF437**
3142572	**CF609**
3142573	**CF610**
3146138	**CF436**
3146139	**CF437**
3176736	**CF609**
3176737	**CF610**
3196553	**CF610**
3196564	**CF436**
3196565	**CF437**
3203311	**CF436**
3203312	**CF437**
3207694	**CF610**
3207695	**CF609**
3492674	**CF437**
3492675	**CF436**
4088892	**CF437**
4088893	**CF436**
4313056	**CF319**
4713348	**CF437**
4713349	**CF436**
4761748	**CF437**
4761749	**CF436**
5066158AA	**CF956**
52000848	**CF437**
52000849	**CF436**
5461441	**CF610**
5474000	**CF609**
5474001	**CF610**
8124565	**CF931**
8124798	**CF609**
8124799	**CF610**
8128855	**CF932**
8129723	**CF931**
8129724	**CF932**
8952000848	**CF437**
8952000849	**CF436**
J3225199	**CF610**
J8126714	**CF437**
J8126715	**CF436**
J8126740	**CF609**
J8126742	**CF931**
J8126775	**CF610**
J8129723	**CF931**

Ad. OE	FRITECH ref.
KIA	
0K011-26-610	**CF833**
0K045-26-610	**CF982**
0K08A-43440	**PF921**
0K201-26-610A	**CF775**
0K30A-26-610	**CF236**
0K552-26-610	**CF833**
0K56A-26-610	**CF817**
0K56A-26-710	**CF816**
0K56B-26-610	**CF878**
0K56B-26-710	**CF877**
0K58C-26-610	**CF1016**
0K58C-26-620	**CF1017**
41710-28000	**CZ130**
41710-28591	**CZ130**
41710-39001	**CZ130**
58330-07000	**CF889**
58330-0P000	**CF862**
58330-1G000	**CF834**
58330-1Y000	**CF999**
58330-38010	**CF253**
58330-FD100	**CF969**
58330-FD200	**CF969**
58380-0P000	**CF863**
58380-1Y000	**CF1000**
58380-38010	**CF252**
58510-1D020	**PF920**
58510-1D030	**PF920**
58510-1D040	**PF922**
58510-1D050	**PF922**
58510-1G100	**PF949**
58510-1H200	**PF953**
58510-2E500	**PF947**
58510-FD100	**PF952**
59120-3E100	**PF813**
59120-3E110	**PF813**
59120-3E150	**PF813**
59120-3E160	**PF813**
59120-3E500	**PF929**
59120-3E550	**PF929**
CA010-05610	**CF889**
KK150-26-610	**CF302**
KIA LCV	
0K72B-26-610A	**CF1005**
0K72B-26-710A	**CF1006**
0K74P-26-610	**CF1007**
0K74P-26-710	**CF1008**
LADA	
2101-1602510	**CZ010**
2101-1602510	**CZ102**
2101-1602610	**PZ014**
2101-1602610	**PZ112**
2101-3502040	**CF002**
2101-350204010	**CF195**
2101-3505008	**PF015**
2101-3505009	**PF073**
2101-3512010	**CT001**
2103-2305009	**PF073**
2105-3502040	**CF171**
2108-3505010	**PF024**
2121-1602610	**PZ014**
2121-3505009	**PF073**
LANCIA	
1487399080	**PZ130**

Ad. OE	FRITECH ref.
4277473	**CT003**
4394440	**PF047**
4396982	**PF047**
4404483	**CF347**
4404484	**CF347**
4410501	**PF047**
4410502	**PF047**
46424868	**PZ032**
46478560	**PZ067**
46478563	**PZ032**
46531635	**CZ023**
46736971	**PF246**
46741473	**PF261**
46741476	**PF236**
46818745	**PZ072**
46819820	**PZ071**
46833774	**PF795**
51800566	**PF847**
55187214	**PZ071**
55189163	**PZ072**
55196176	**PZ072**
55196254	**PZ071**
55196255	**PZ072**
60627989	**PF246**
60811771	**CZ024**
60815246	**CZ023**
60815725	**PF246**
71737761	**PZ070**
71737952	**CF067**
71737956	**CF132**
71737957	**CF130**
71737958	**CF778**
71738324	**CF004**
71738325	**CF101**
71738326	**CF094**
71738328	**CF004**
71738443	**PF009**
71738446	**PF006**
71739592	**PF042**
71739993	**PF091**
71740002	**PF217**
71768649	**CF808**
7696710	**CF004**
7708289	**PZ060**
7734997	**CF067**
77362384	**PF542**
77362404	**PF539**
77362405	**PF540**
77362463	**CF778**
77362469	**PF500**
77362617	**CF808**
77362621	**CF777**
77363849	**CF827**
77364028	**CF829**
77364467	**PF845**
77364611	**PF847**
77364809	**PF847**
77365184	**PF847**
77365594	**PF845**
77365819	**PF965**
7740758	**CF130**
7759547	**PZ034**
7767150	**PF006**
7788185	**PZ037**
790513	**PF047**
790519	**PF047**
790520	**CT003**
790610	**CF201**
790741	**PF141**
790833	**CF004**
791159	**CF347**
791328	**PF019**
791456	**CT006**
791461	**CT003**
792040	**PF009**
792895	**PF009**
793143	**PF047**
793148	**PF047**

Ad. OE	FRITECH ref.
793233	**PF141**
793234	**PF019**
793266	**PF006**
793439	**CF101**
793604	**PF132**
793962	**PF132**
794008	**PF185**
795621	**PF006**
82409600	**CZ011**
82442897	**PZ015**
9463378380	**PF429**
9463378480	**PF464**
9566949780	**CF094**
9567205480	**PF217**
9626813180	**CZ103**
9635975480	**CZ103**
9641622380	**CZ103**
9682650080	**CZ103**
9939672	**PF091**
9943323	**PF185**
9943705	**PF091**
9944386	**PF042**
9945379	**CF004**
9945760	**PF042**
9945762	**PF042**
9945980	**CF090**
9947098	**PF006**
9947099	**PF042**
9947161	**CF132**
9948232	**CF004**
9948315	**PF042**
9948586	**PF236**
9948931	**CF778**
9949305	**PF482**
9949615	**PF592**
9949652	**PF323**
9950677	**PF042**
9950817	**CF130**
LAND ROVER	
233863	**CF279**
233864	**CF280**
243296	**CF277**
243302	**CF429**
243303	**CF430**
243743	**CF279**
243744	**CF280**
243927	**CF278**
7H4840	**CF279**
7H4841	**CF280**
FTC5202	**CZ119**
GWC1307	**CF429**
GWC1308	**CF430**
GWC303	**CF279**
GWC304	**CF280**
GWC305	**CF277**
GWC306	**CF278**
RTC3168	**CF485**
RTC3169	**CF294**
RTC3626	**CF295**
RTC3627	**CF296**
SML000010	**CF811**
SML100070	**CF085**
STC467	**CF978**
STC468	**CF977**
LEXUS	
47028-30030	**PF958**

Ad. OE	FRITECH ref.
LINCOLN	
937959	**CF747**
937960	**CF748**
C2SZ2261A	**CF609**
C2VY2261A	**CF610**
C2VY2262A	**CF609**
C30Z2261A	**CF610**
C30Z2262A	**CF609**
C3AZ2261A	**CF610**
C3AZ2262A	**CF609**
C5TZ2261D	**CF748**
C5TZ2262B	**CF747**
C6TZ2261A	**CF610**
C6TZ2262A	**CF609**
C7AZ2261A	**CF610**
C7AZ2261C	**CF610**
C7AZ2262A	**CF609**
C7AZ2262C	**CF609**
D1AZ2261A	**CF610**
D1AZ2262A	**CF609**
D20Z2261A	**CF610**
D20Z2261B	**CF610**
D20Z2262A	**CF609**
D20Z2262B	**CF609**
D30Z2261C	**CF610**
D30Z2262C	**CF609**
D3TZ2261B	**CF610**
D3TZ2262B	**CF609**
D5DZ2261A	**CF610**
D5DZ2262A	**CF609**
D6TZ2261A	**CF748**
D6TZ2262A	**CF747**
D9AZ2261B	**CF936**
E2TZ2261B	**CF748**
E2TZ2262B	**CF747**
LOTUS	
113E2261	**CF335**
1470050	**CF417**
1560032	**CF163**
1737066	**CF335**
D0RY-22-61A	**CF417**
MARCOS	
105E2261	**CF261**
1708706	**CF261**
MATRA	
13545500	**CF030**
17680000	**CF036**
17689400	**CF020**
4402.63	**CF027**
44024400	**CF036**
48837Z	**CF030**
MAZDA	
0433-26-610	**CF618**
0433-26-610A	**CF618**
0613-26-610A	**CF410**
0813-26-610A	**CF361**
0813-26-610C	**CF361**
0813-26-610D	**CF361**
1011-26-610A	**CF615**
1011-26-610B	**CF615**

CROSS REFERENCES LIST

MAZDA

Ad. OE	FRITECH ref.
1011-26-610C	CF615
1011-26-610D	CF615
1011-26-710A	CF488
1011-26-710B	CF488
1011-26-710C	CF488
1011-26-710D	CF488
104-26-610B	CF615
104-26-710B	CF488
1745-26-610	CF606
1745-26-610A	CF606
1745-26-710	CF411
1745-26-710A	CF411
1E03-26-610	CF786
1E04-26-610	CF786
1E04-26-610A	CF786
1E06-26-610	CF721
1E06-26-710	CF721
66670099	CF630
66670105	CF631
8531-26-610	CF600
8532-26-610	CF598
8565-26-710	CF740
B001-26-610	CF271
B001-26-610A	CF271
B092-26-610	CF218
B216-26-610	CF227
B216-26-610A	CF227
B216-26-610B	CF227
B21H-26-610	CF825
B21H-26-610A	CF825
B3YF-43-40ZA	PF954
BB62-26-610	CF516
BB62-26-610A	CF516
BB62-26-710	CF622
BB62-26-710A	CF622
BC1D-26-610	CF573
BC1D-26-610A	CF573
BC1D-26-610B	CF573
BC2A-43-40Z	PF258
BC2A-43-40ZA	PF258
BPYS-43-40Z	PF801
BPYS-43-40ZB	PF801
BPYS-43-40ZC	PF801
D001-26-610A	CF302
DC03-26-610	CF789
DC03-26-610A	CF789
DDY2-26-710	CF552
DDY2-26-710A	CF552
DDY2-43-40Z	PF528
DF71-26-610	CF572
DFY3-43-40Z	PF693
DFY3-43-40ZA	PF693
DFY3-43-40ZB	PF693
DL33-26-610	CF572
G030-26-610	CF211
GA02-26-710	CF604
GA02-26-710A	CF604
GE4T-26-610	CF981
GE4T-26-610A	CF981
GE4T-26-610C	CF981
GJ21-26-251C	CF236
GJ21-26-610	CF236
GJ21-26-610C	CF236
GJ6L-43-40Z	PF880
GJ6L-43-40ZA	PF880
LA01-26-610	CF506
LA01-26-710	CF507
LC62-26-610C	CF1011
NA01-41-920	CZ128
NA01-41-920A	CZ128
NA01-41-920B	CZ128
NA01-41-920C	CZ128
NC78-43-40Z	PF930
NF02-43-40Z	PF930
UA3P-43-400A	PF933
UA3R-43-400	PF932
UB39-41-920	CZ129
UH71-26-610	CF997
UR58-26-610	CF997
UR58-26-610A	CF997
UR79-43-400	PF933
UR81-43-400	PF932
ZZL0-26-610A	CF962

MAZDA LCV

Ad. OE	FRITECH ref.
1011-26-610A	CF615
1011-26-610B	CF615
1011-26-610C	CF615
1011-26-610D	CF615
1011-26-710A	CF488
1011-26-710B	CF488
1011-26-710C	CF488
1011-26-710D	CF488
104-26-610B	CF615
104-26-710B	CF488
3632534	CF705
3632535	CF706
LA01-26-610	CF506
LA01-26-710	CF507
UB39-26-610	CF492
UB39-26-710	CF493
UB39-41-920	CZ129
UH71-26-610	CF997
UR58-26-610	CF997
UR58-26-610A	CF997
ZZM2-26-610	CF550
ZZM2-26-710	CF551

MERCEDES BENZ

Ad. OE	FRITECH ref.
000 290 32 12	PZ075
000 295 65 07	CZ018
000 295 76 07	CZ018
000 295 82 07	CZ018
000 295 91 06	PZ022
000 431 58 01	PF245
000 431 59 01	PF244
000 431 61 01	PF828
000 431 62 01	PF829
000 431 69 01	PF803
000 431 70 01	PF635
000 431 72 01	PF829
000 431 76 01	PF982
001 290 03 11	CZ016
001 295 13 07	CZ016
001 295 14 06	PZ022
001 295 14 07	CZ016
001 295 27 07	CZ016
001 295 29 07	CZ016
001 295 30 07	CZ016
001 295 31 06	PZ023
001 295 31 06	PZ113
001 295 68 06	PZ023
001 295 68 06	PZ113
001 295 68 07	CZ018
002 295 08 07	CZ112
002 295 22 07	CZ112
003 430 60 01	PF124
003 430 78 01	PF124
003 430 99 01	PF124
004 430 04 01	PF124
004 430 09 01	PF124
004 430 17 01	PF156
004 430 23 01	PF124
004 430 24 01	PF156
004 430 25 01	PF124
004 430 26 01	PF155
004 430 34 01	PF158
004 430 38 01	PF157
004 430 39 01	PF158
004 430 55 01	PF157
004 430 75 01	PF157
005 430 24 01	PF158
005 430 59 01	PF156
005 430 62 01	PF610
005 430 63 01	PF655
005 430 64 01	PF611
005 430 65 01	PF654
005 430 65 01	PF627
005 430 72 01	PF626
005 430 77 01	PF633
005 430 82 01	PF830
005 430 83 01	PF653
005 430 84 01	PF634
005 430 88 01	PF627
005 430 94 01	PF831
005 430 96 01	PF832
005 430 97 01	PF837
005 430 98 01	PF833
005 430 99 01	PF834
007 420 09 18	CF283
008 420 43 18	CF283
011 420 88 18	CF283
168 290 00 12	PZ094
168 290 00 12	PZ108
168 290 02 12	PZ094
168 290 02 12	PZ108
168 290 04 12	PZ094
168 290 04 12	PZ108
168 290 05 12	PZ095
168 290 05 12	PZ109
168 420 00 18	CF317
168 420 01 18	CF318
168 420 03 18	CF856
168 430 00 01	PF239
168 430 01 01	PF240
168 430 02 01	PF240
169 430 01 01	PF838
169 430 02 01	PF838
169 430 03 01	PF838
201 290 00 11	CZ016
201 290 03 11	CZ016
201 290 04 11	CZ017
201 290 05 11	CZ017
202 290 00 11	CZ017
202 290 01 12	PZ023
202 290 01 12	PZ113
202 290 04 11	CZ017
203 290 01 12	PZ096
203 290 01 12	PZ110
203 290 02 12	PZ096
203 290 02 12	PZ110

MERCEDES BENZ LCV

Ad. OE	FRITECH ref.
000 290 32 12	PZ075
000 295 65 07	CZ018
000 295 76 07	CZ018
000 295 82 07	CZ018
000 295 91 06	PZ022
000 431 47 01	PF304
000 431 56 01	PF304
000 431 58 01	PF245
000 431 59 01	PF244
000 431 63 01	PF580
000 431 65 01	PF304
000 431 69 01	PF803
000 431 70 01	PF635
000 431 71 01	PF636
000 431 73 01	PF897
000 431 76 01	PF982
001 295 11 06	PZ100
001 295 14 06	PZ022
001 295 17 06	PZ100
001 295 76 06	PZ100
001 295 79 06	PZ100
001 295 86 06	PZ029
001 295 86 06	PZ100
002 295 06 07	CZ053
002 295 08 07	CZ112
002 295 21 07	CZ053
002 295 22 07	CZ112
005 420 78 18	CF199
005 420 79 18	CF366
005 420 81 18	CF166
008 420 24 18	CF257
009 420 82 18	CF199
009 420 83 18	CF199
182 305 03 10	CF489
415 420 00 18	CF854
608 420 03 18	CF489
631 420 00 18	CF177

MERCEDES BENZ TRUCK

Ad. OE	FRITECH ref.
002 295 06 07	CZ053
002 295 21 07	CZ053
005 420 78 18	CF199
007 420 09 18	CF283
008 420 43 18	CF283
009 420 82 18	CF199
009 420 83 18	CF199
011 420 88 18	CF283

MERCURY

Ad. OE	FRITECH ref.
1006012	CF095
6088234	CF095
6196053	CF095
81AB2261AA	CF095
8M2261A	CF950
8M2262A	CF949
91AB2261CA	CF095
C20Z2261B	CF437
C20Z2262B	CF436
C2SZ2261A	CF609
C2VY2261A	CF610
C2VY2262A	CF609
C30Z2261A	CF610
C30Z2262A	CF609
C3AZ2261A	CF610
C3AZ2261B	CF437
C3AZ2262A	CF436
C3AZ2262A	CF609
C4TZ2261A	CF437
C4TZ2262A	CF436
C5TZ2261C	CF950
C5TZ2262A	CF949
C60Z2261A	CF437
C60Z2262A	CF436
C6TZ2261A	CF610
C6TZ2262A	CF609
C7AZ2261A	CF610
C7AZ2261C	CF610
C7AZ2262A	CF609
C7AZ2262C	CF609
C9AZ2261A	CF950
C9AZ2262A	CF949
D1AZ2261A	CF610
D1AZ2262A	CF609
D20Z2261A	CF610
D20Z2261B	CF610
D20Z2262A	CF609
D20Z2262B	CF609
D2SZ2261A	CF950
D2SZ2262A	CF949
D2ZZ2262A	CF436
D30Z2261C	CF610
D30Z2261D	CF950
D30Z2262C	CF609
D30Z2262D	CF949
D3SZ2261A	CF950
D3SZ2262A	CF949
D3TZ2261A	CF437
D3TZ2261B	CF610
D3TZ2262A	CF436
D3TZ2262B	CF609
D3ZZ2261A	CF437
D3ZZ2262A	CF436
D5DZ2261A	CF610
D5DZ2262A	CF609
E0ZZ2261A	CF783
E0ZZ2262A	CF783
E1FZ2261A	CF433
E1FZ2262A	CF588
E2FZ2261A	CF433
E2FZ2262B	CF588
E43Z2261A	CF723
E43Z2262A	CF722
E5RY2261A	CF095
E5SZ2261A	CF768
E5SZ2262A	CF767
E6DZ2261A	CF751
E7GZ2261A	CF218
E7GZ2261A	CF227
E9SZ2261B	CF958

MINI

Ad. OE	FRITECH ref.
34 31 6 758 226	PF584
34 31 6 758 228	PF524
34 31 6 779 678	PF524
34 33 6 785 192	PF892
34 33 6 785 667	PF584
34 33 6 786 585	PF892

MITSUBISHI

Ad. OE	FRITECH ref.
4600A015	CF849
4610A008	CF974
4610A009	CF975
MA180750	CF378
MA180751	CF399
MB004040	CF379
MB004041	CF398
MB058553	CF269
MB128624	CF269
MB134828	CF398
MB134829	CF399
MB193411	CF269
MB238510	CF299
MB238511	CF298
MB238828	CF309
MB238829	CF308
MB366139	CF540
MB366326	CF496
MB500482	CF398
MB500483	CF399
MB500484	CF299
MB500485	CF298
MB500738	CF541
MB500739	CF542
MB618188	CF563
MB618981	CF572
MB857390	PF955
MB857393	PF259
MD718392	CZ125
MD733228	CZ125
MD742157	CZ125
MR129595	CF826
MR249087	PF260
MR307779	CF515

Ad. OE	FRITECH ref.
MITSUBISHI	
MR407141	**CF989**
MR493392	**CF541**
MR493393	**CF542**
MITSUBISHI LCV	
MB238510	**CF299**
MB238511	**CF298**
MB238828	**CF309**
MB238829	**CF308**
MB500484	**CF299**
MB500485	**CF298**
NISSAN	
069021740	**CF177**
069022780	**CF813**
069041420	**CF831**
069052380	**CF812**
30620-2J00A	**CZ124**
30620-2J020	**CZ124**
30620-2J060	**CZ124**
30620-2J061	**CZ124**
30620-2J063	**CZ124**
4126780	**CF402**
4238701	**CF402**
44100-01A00	**CF519**
44100-01A02	**CF519**
44100-01J11	**CF757**
44100-01J12	**CF757**
44100-04B00	**CF174**
44100-04B02	**CF174**
44100-04B04	**CF174**
44100-05N10	**CF503**
44100-05N11	**CF503**
44100-05N12	**CF503**
44100-05N13	**CF503**
44100-05N14	**CF503**
44100-08G10	**CF494**
44100-0F000	**CF184**
44100-0F001	**CF247**
44100-0G198	**CF626**
44100-0X800	**CF178**
44100-0X810	**CF179**
44100-0X900	**CF803**
44100-13A00	**CF204**
44100-13A02	**CF204**
44100-17C10	**CF197**
44100-17C11	**CF197**
44100-18000	**CF363**
44100-1HD3A	**CF1013**
44100-1HD3B	**CF1013**
44100-22000	**CF363**
44100-22001	**CF363**
44100-31G10	**CF514**
44100-3F000	**CF243**
44100-3J310	**CF629**
44100-3T010	**CF965**
44100-3T011	**CF965**
44100-4A00D	**CF292**
44100-50C10	**CF174**
44100-50C11	**CF174**
44100-50C12	**CF174**
44100-50C13	**CF174**
44100-51S10	**CF205**
44100-55S10	**CF406**
44100-60A10	**CF620**
44100-60A11	**CF620**
44100-60A12	**CF620**
44100-66S10	**CF628**
44100-6F611	**CF168**

Ad. OE	FRITECH ref.
44100-70J20	**CF243**
44100-70J22	**CF243**
44100-7E611	**CF814**
44100-7F000	**CF184**
44100-7F001	**CF696**
44100-86G10	**CF494**
44100-99B12	**CF168**
44100-AX600	**CF780**
44100-BH00A	**CF780**
44100-C7100	**CF546**
44100-C7101	**CF546**
44100-D0110	**CF403**
44100-D0111	**CF403**
44100-D0112	**CF403**
44100-D5510	**CF505**
44100-EB30A	**CF970**
44100-EB360	**CF970**
44100-G5110	**CF517**
44100-H3100	**CF363**
44100-H3300	**CF362**
44100-M4901	**CF608**
44100-N4601	**CF205**
44100-N4602	**CF623**
44100-Q1100	**CF407**
44100-Q1110	**CF407**
44100-Q3110	**CF406**
44100-U4000	**CF363**
44100-U8710	**CF714**
44100-U9200	**CF197**
44100-VE401	**CF995**
44101-3F000	**CF242**
44101-3J310	**CF629**
44101-70J20	**CF242**
44101-70J22	**CF242**
46010-1M320	**PF487**
46010-4U220	**PF835**
46010-5M302	**PF835**
46010-64J65	**PF216**
46010-64J75	**PF216**
46010-70J85	**PF189**
46010-8H910	**PF637**
46010-AV600	**PF579**
46010-AV601	**PF579**
46010-AV610	**PF578**
46010-AV611	**PF578**
46010-AX701	**PF530**
46010-AX720	**PF812**
46010-BN010	**PF974**
46010-BN300	**PF835**
46010-BN810	**PF974**
46010-BU810	**PF974**
46012-JD80A	**PF895**
46012-JD81A	**PF924**
4762296	**CF402**
5204338	**CF402**
66670143	**CF632**
66670144	**CF633**
D6010-1AA1B	**PF956**
D6010-JG20B	**PF926**
D6010-JG21A	**PF925**
D6010-JG80A	**PF926**
D6010-JG80B	**PF926**
D6010-JG81A	**PF925**
NISSAN LCV	
44100-00QAC	**CF138**
44100-00QAD	**CF139**
44100-01J11	**CF757**
44100-01J12	**CF757**
44100-01W01	**CF522**
44100-05N10	**CF503**
44100-05N11	**CF503**
44100-05N12	**CF503**
44100-05N13	**CF503**
44100-05N14	**CF503**

Ad. OE	FRITECH ref.
44100-05W01	**CF501**
44100-08G10	**CF494**
44100-08G11	**CF495**
44100-08W04	**CF502**
44100-08W10	**CF502**
44100-08W11	**CF502**
44100-08W12	**CF502**
44100-0F000	**CF184**
44100-0F001	**CF247**
44100-0G198	**CF626**
44100-0X800	**CF178**
44100-0X810	**CF179**
44100-0X900	**CF803**
44100-17C10	**CF197**
44100-17C11	**CF197**
44100-31G10	**CF514**
44100-35G10	**CF521**
44100-37G10	**CF304**
44100-37G11	**CF304**
44100-3T010	**CF965**
44100-3T011	**CF965**
44100-3W400	**CF993**
44100-3W40A	**CF993**
44100-48W10	**CF518**
44100-48W11	**CF518**
44100-51S10	**CF205**
44100-7F000	**CF184**
44100-7F001	**CF696**
44100-86G10	**CF494**
44100-9X125	**CF180**
44100-C7100	**CF546**
44100-C7101	**CF546**
44100-D5510	**CF505**
44100-G5110	**CF517**
44100-N4601	**CF205**
44100-U9200	**CF197**
44100-VE401	**CF995**
46010-00Q0B	**PF980**
46010-00Q0C	**PF978**
46010-00Q0N	**PF979**
46010-00Q1A	**PF978**
46010-00QAE	**PF502**
46010-00QAF	**PF503**
46010-00QAG	**PF624**
46010-00QAH	**PF624**
46010-00QAJ	**PF620**
46010-00QAK	**PF620**
46010-00QAL	**PF252**
46010-00QAM	**PF582**
46010-00QAP	**PF806**
46010-00QAS	**PF621**
46010-00QAT	**PF623**
46010-00QAU	**PF622**
NISSAN USA TRUCK	
44100-0B000	**CF958**
NSU	
675700518	**CF267**
OLDSMOBILE	
18001997	**CF932**
18003743	**CF928**
18003905	**CF946**
18004793	**CF932**
18004880	**CF931**
18004888	**CF934**
18004889	**CF945**
18004890	**CF931**

Ad. OE	FRITECH ref.
18004946	**CF953**
18005894	**CF927**
18007980	**CF928**
18007981	**CF927**
18008056	**CF928**
18008649	**CF930**
18009123	**CF937**
18010106	**CF937**
18012303	**CF928**
18012582	**CF933**
18012582	**CF944**
18013386	**CF945**
18014168	**CF940**
18014171	**CF952**
18014499	**CF784**
18014589	**CF951**
18017570	**CF762**
18019217	**CF957**
18020210	**CF933**
18020210	**CF944**
18029868	**CF955**
18029943	**CF933**
18029943	**CF944**
18039335	**CF955**
5452329	**CF953**
5462939	**CF945**
5464077	**CF934**
5465497	**CF932**
5465580	**CF931**
5468290	**CF953**
5469245	**CF934**
5469321	**CF945**
5469331	**CF953**
5472327	**CF932**
OM (CARRELLI ELEVATORI)	
219820	**CF266**
4168151	**PF011**
4171016	**PF012**
4210962	**PF011**
4210963	**PF012**
9000313	**CF173**
9007416	**CF266**
9817150	**CF238**
9818220	**CF584**
9819240	**CF560**
9819251	**CF266**
9847220	**CF793**
W982331	**CF266**
OPEL	
03476450	**PF160**
18044060	**CF320**
2866166	**CF264**
34476987	**PF110**
3455822	**CF365**
3476450	**PF160**
3476971	**PF109**
3476978	**PF159**
3488318	**PF165**
3488319	**PF167**
3488710	**PF165**
3488711	**PF163**
3488811	**PF109**
3488812	**PF110**
3488813	**PF166**
3488858	**PF162**
3488960	**PF164**
3492175	**PF164**
3492289	**PF162**
3492361	**PF161**
3492362	**PF168**

Ad. OE	FRITECH ref.
3492467	**PF038**
3492913	**PF198**
3492930	**PF199**
3492940	**PF249**
3492954	**PF193**
3495064	**PF281**
3495542	**PF282**
3495609	**PF249**
3495610	**PF250**
3495649	**PF279**
4702168	**PF381**
4703055	**PF380**
4705130	**CF677**
4708604	**CF808**
4709779	**PF886**
4709780	**PF901**
550006	**CF154**
550008	**CF009**
550009	**CF008**
550011	**CF320**
550012	**CF264**
550023	**CF865**
550025	**CF827**
550036	**CF342**
550037	**CF343**
550055	**CF365**
550056	**CF339**
550057	**CF153**
550061	**CF342**
550062	**CF343**
550065	**CF352**
550066	**CF233**
550113	**CF044**
550114	**CF008**
550115	**CF394**
550118	**CF152**
550119	**CF044**
550120	**CF008**
550122	**CF233**
550123	**CF233**
550125	**CF153**
550127	**CF152**
550128	**CF044**
550129	**CF008**
550130	**CF154**
550132	**CF155**
550133	**CF074**
550134	**CF105**
550135	**CF009**
550140	**CF009**
550141	**CF074**
550142	**CF237**
550143	**CF009**
550144	**CF074**
550153	**CF185**
550157	**CF320**
550248	**CF780**
558000	**PF557**
558001	**PF165**
558002	**PF167**
558006	**PF109**
558008	**PF522**
558009	**PF193**
558013	**PF282**
558019	**PF198**
558020	**PF279**
558035	**PF162**
558036	**PF164**
558052	**PF162**
558057	**PF162**
558058	**PF219**
558059	**PF280**
558062	**PF160**
558070	**PF109**
558071	**PF164**
558078	**PF281**
558092	**PF520**
558093	**PF521**

CROSS REFERENCES LIST

Ad. OE	FRITECH ref.
OPEL	
558099	**PF214**
558100	**PF161**
558101	**PF168**
558102	**PF038**
558103	**PF160**
558110	**PF249**
558119	**PF199**
558120	**PF638**
558121	**PF537**
558128	**PF660**
558131	**PF659**
558132	**PF638**
558133	**PF658**
558137	**PF110**
558137	**PF800**
558141	**PF159**
558143	**PF657**
558144	**PF656**
558145	**PF800**
558146	**PF166**
558147	**PF659**
558162	**PF523**
558168	**PF249**
558169	**PF250**
558174	**PF280**
558182	**PF861**
558183	**PF862**
558184	**PF109**
558185	**PF110**
558186	**PF166**
558192	**PF638**
558194	**PF165**
558195	**PF163**
558220	**PF912**
558222	**PF912**
558223	**PF913**
558224	**PF913**
558242	**PF699**
558258	**PF857**
558387	**PF865**
558388	**PF866**
558389	**PF700**
558391	**PF699**
558392	**PF857**
558393	**PF858**
558404	**PF941**
5679306	**PZ078**
5679306	**PZ103**
5679307	**PZ079**
5679307	**PZ104**
5679312	**PZ097**
5679354	**PZ146**
6397840	**CF372**
6397841	**CF371**
6397977	**CF261**
679119	**PZ146**
679323	**PZ098**
679401	**PZ117**
7216780	**CF373**
8965688	**CF352**
8967747	**CF339**
8967749	**CF153**
8967753	**CF342**
90006866	**PF638**
90007425	**CF154**
90095703	**CF008**
90105507	**CF394**
90142096	**CF152**
90167528	**CF233**
90167539	**CF233**
90167545	**CF153**
90167546	**CF152**
90168040	**CF044**
90168041	**CF008**
90168396	**CF044**
90187567	**CF044**
90187568	**CF008**
90189396	**CF044**
90189473	**CF152**
90189474	**CF233**
90209242	**CF154**
90235419	**CF105**
90235420	**CF009**
90235422	**CF074**
90235424	**CF155**
90297376	**PF219**
90348213	**PF214**
90374075	**CF009**
90374076	**CF074**
90443259	**CF009**
90443261	**CF074**
90498300	**CF185**
90512840	**PF523**
90522656	**PZ098**
90523769	**PZ078**
90523769	**PZ103**
90578481	**PZ097**
90581456	**CF320**
90581565	**PZ079**
90581565	**PZ104**
91032989	**CF360**
9117554	**PF280**
9126216	**PZ117**
9192247	**PF522**
9193225	**PF280**
9195530	**PF380**
9195531	**PF381**
9196174	**PF557**
92021044	**CF727**
9209092	**CF677**
93172088	**PF520**
93177767	**PF660**
93177768	**PF659**
93177769	**PF658**
93177770	**PF110**
93177770	**PF800**
93179177	**PF657**
93179178	**PF656**
93181438	**PF800**
93183406	**PF861**
93183407	**PF862**
93189712	**PF865**
93189715	**PF866**
93189743	**PF700**
93189744	**PF699**
93189745	**PF857**
93189746	**PF858**
93189986	**CF780**
93193435	**CF808**
93195180	**PF886**
93195181	**PF901**
94313437	**PF160**
95512092	**CF865**
95512230	**PF912**
95515109	**CF827**
95518072	**PF857**
97127616	**CF237**
9867754	**CF343**
OPEL LCV	
03476450	**PF160**
18044060	**CF320**
34476987	**PF110**
3476450	**PF160**
3476978	**PF159**
3488319	**PF167**
3488812	**PF110**
3488858	**PF162**
3488960	**PF164**
3492175	**PF164**
3492289	**PF162**
3492467	**PF038**
3492913	**PF198**
3492930	**PF199**
3492954	**PF193**
3495609	**PF249**
3495610	**PF250**
4400036	**PF502**
4400037	**PF503**
4402883	**CF250**
4402961	**CF225**
4405404	**PF806**
4413094	**PF622**
4414014	**PF624**
4414019	**PF620**
4415501	**PF623**
4415502	**PF621**
4415520	**PF502**
4417126	**PF980**
4417127	**PF978**
4417128	**PF979**
4500936	**CF325**
4500937	**CF326**
550006	**CF154**
550008	**CF009**
550009	**CF008**
550011	**CF320**
550023	**CF865**
550025	**CF827**
550113	**CF044**
550114	**CF008**
550119	**CF044**
550120	**CF008**
550128	**CF044**
550129	**CF008**
550130	**CF154**
550132	**CF155**
550133	**CF074**
550134	**CF105**
550135	**CF009**
550140	**CF009**
550141	**CF074**
550142	**CF237**
550143	**CF009**
550144	**CF074**
550153	**CF185**
550157	**CF320**
558000	**PF557**
558002	**PF167**
558009	**PF193**
558019	**PF198**
558035	**PF162**
558036	**PF164**
558052	**PF162**
558057	**PF162**
558058	**PF219**
558059	**PF280**
558062	**PF160**
558071	**PF164**
558078	**PF281**
558099	**PF214**
558102	**PF038**
558103	**PF160**
558119	**PF199**
558128	**PF660**
558131	**PF659**
558133	**PF658**
558137	**PF110**
558137	**PF800**
558141	**PF159**
558143	**PF657**
558144	**PF656**
558145	**PF800**
558147	**PF659**
558168	**PF249**
558169	**PF250**
558174	**PF280**
558185	**PF110**
558220	**PF912**
558222	**PF912**
558223	**PF913**
558224	**PF913**
558387	**PF865**
558388	**PF866**
5679306	**PZ078**
5679306	**PZ103**
5679354	**PZ146**
679119	**PZ146**
679401	**PZ117**
90007425	**CF154**
90095703	**CF008**
90168040	**CF044**
90168041	**CF008**
90168396	**CF044**
90187567	**CF044**
90187568	**CF008**
90189396	**CF044**
90209242	**CF154**
90235419	**CF105**
90235420	**CF009**
90235424	**CF155**
90297376	**PF219**
90374075	**CF009**
90443259	**CF009**
90523769	**PZ078**
90523769	**PZ103**
90581456	**CF320**
9108036	**PF502**
9110883	**CF250**
9110961	**CF225**
9121237	**PF806**
9126216	**PZ117**
9161236	**CF325**
9161237	**CF326**
9196174	**PF557**
9199230	**PF624**
9199236	**PF620**
93161164	**PF622**
93177767	**PF660**
93177770	**PF110**
93177770	**PF800**
93179177	**PF657**
93179178	**PF656**
93181374	**PF623**
93181375	**PF621**
93181416	**PF502**
93181438	**PF800**
93189712	**PF865**
93189715	**PF866**
93189930	**PF980**
93189931	**PF978**
93189932	**PF979**
94230541	**CF237**
95512092	**CF865**
95512230	**PF912**
95515109	**CF827**
97127616	**CF237**
PEUGEOT	
1487399080	**PZ130**
1607138880	**CF921**
1612440280	**CF1018**
2086.04	**CZ019**
2086.08	**CZ019**
2095.17	**PZ024**
2095.18	**PZ024**
2182.07	**PZ130**
2182.15	**PZ115**
2182.16	**CZ104**
2182.17	**CZ103**
2182.24	**PZ116**
2182.82	**PZ116**
2182.95	**CZ103**
4401.24	**CF449**
4402.21	**CF338**
4402.28	**CF448**
4402.29	**CF447**
4402.35	**CF117**
4402.36	**CF118**
4402.39	**CF391**
4402.40	**CF392**
4402.41	**CF389**
4402.42	**CF390**
4402.43	**CF019**
4402.44	**CF036**
4402.45	**CF114**
4402.46	**CF115**
4402.47	**CF012**
4402.48	**CF013**
4402.49	**CF056**
4402.50	**CF031**
4402.52	**CF533**
4402.53	**CF018**
4402.54	**CF426**
4402.56	**CF530**
4402.57	**CF104**
4402.59	**CF089**
4402.62	**CF030**
4402.63	**CF027**
4402.65	**CF052**
4402.66	**CF053**
4402.67	**CF048**
4402.68	**CF049**
4402.73	**CF050**
4402.74	**CF051**
4402.75	**CF088**
4402.77	**CF014**
4402.78	**CF015**
4402.79	**CF017**
4402.80	**CF016**
4402.82	**CF046**
4402.83	**CF047**
4402.86	**CF063**
4402.87	**CF064**
4402.88	**CF048**
4402.89	**CF049**
4402.90	**CF077**
4402.91	**CF078**
4402.92	**CF102**
4402.93	**CF083**
4402.94	**CF084**
4402.97	**CF061**
4402.98	**CF062**
4402.A0	**CF043**
4402.A1	**CF042**
4402.A2	**CF133**
4402.A6	**CF160**
4402.A7	**CF094**
4402.A8	**CF159**
4402.A9	**CF145**
4402.C0	**CF146**
4402.C1	**CF147**
4402.C2	**CF148**
4402.C3	**CF159**
4402.C4	**CF145**
4402.C5	**CF146**
4402.C7	**CF134**
4402.C8	**CF162**
4402.C9	**CF142**
4402.E0	**CF143**
4402.E3	**CF520**
4402.E5	**CF520**
4402.E6	**CF801**
4402.F0	**CF802**
4402.F1	**CF850**
4402.G1	**CF826**
4601.50	**PF084**
4601.52	**PF292**
4601.57	**PF080**
4601.62	**PF084**
4601.65	**PF082**

PEUGEOT

Ad. OE	FRITECH ref.
4601.71	PF022
4601.72	PF081
4601.75	PF085
4601.76	PF139
4601.80	PF115
4601.84	PF021
4601.85	PF007
4601.87	PF169
4601.89	PF008
4601.90	PF194
4601.92	PF008
4601.93	PF128
4601.94	PF114
4601.95	PF035
4601.96	PF197
4601.97	PF008
4601.98	PF173
4601.99	PF131
4601.A1	PF196
4601.A2	PF008
4601.A6	PF194
4601.A7	PF200
4601.A8	PF195
4601.A9	PF201
4601.C0	PF202
4601.C1	PF200
4601.C2	PF195
4601.C4	PF191
4601.E1	PF218
4601.E2	PF217
4601.E3	PF197
4601.E4	PF196
4601.E8	PF271
4601.E9	PF265
4601.F0	PF227
4601.F1	PF213
4601.F2	PF266
4601.F3	PF571
4601.F4	PF213
4601.F5	PF267
4601.F6	PF268
4601.F8	PF242
4601.F9	PF269
4601.G0	PF270
4601.G1	PF271
4601.G9	PF571
4601.H4	PF007
4601.H5	PF243
4601.H8	PF007
4601.H9	PF272
4601.J0	PF599
4601.J1	PF589
4601.J2	PF273
4601.J3	PF269
4601.J4	PF274
4601.J7	PF575
4601.J8	PF275
4601.J9	PF462
4601.K0	PF385
4601.K1	PF429
4601.K2	PF464
4601.K8	PF499
4601.L7	PF508
4601.L8	PF507
4601.L9	PF506
4601.P2	PF590
4601.R0	PF625
4601.R1	PF798
4601.R3	PF853
4601.R5	PF989
4601.R6	PF791
4601.R7	PF792
4601.R8	PF854
4601.R9	PF855
4601.T2	PF798
4601.V0	PF873
4601.V1	PF798
4601.V7	PF793
4601.W2	PF573
4601.W6	PF794
4601.W8	PF916
4601.W9	PF917
4601.X0	PF918
4601.X1	PF919
4601.Y3	PF873
4601.Y4	PF798
4861.72	CT016
95668068	CF062
9635231180	CZ104

PEUGEOT LCV

Ad. OE	FRITECH ref.
1487399080	PZ130
1607332180	PZ155
2086.04	CZ019
2086.08	CZ019
2182.07	PZ130
2182.16	CZ104
2182.26	PZ155
2182.44	PZ155
2182.48	PZ155
2182.F6	PZ146
4402.38	CF529
4402.58	CF270
4402.65	CF052
4402.66	CF053
4402.70	CF157
4402.73	CF050
4402.74	CF051
4402.81	CF210
4402.82	CF046
4402.83	CF047
4402.85	CF306
4402.92	CF102
4402.A2	CF133
4402.A3	CF182
4402.A4	CF181
4402.A5	CF183
4402.A7	CF094
4402.C6	CF158
4402.C8	CF162
4402.C9	CF142
4402.E0	CF143
4402.E4	CF182
4402.E7	CF868
4402.E8	CF158
4402.F1	CF850
4402.F2	CF830
4402.F3	CF827
4601.83	PF031
4601.85	PF007
4601.87	PF169
4601.88	PF031
4601.89	PF008
4601.90	PF194
4601.92	PF008
4601.96	PF197
4601.97	PF008
4601.99	PF131
4601.A1	PF196
4601.A2	PF008
4601.A6	PF194
4601.C8	PF210
4601.D0	PF207
4601.D1	PF208
4601.D3	PF205
4601.E1	PF218
4601.E2	PF217
4601.E3	PF197
4601.E4	PF196
4601.E5	PF209
4601.E6	PF206
4601.E8	PF271
4601.E9	PF265
4601.F6	PF268
4601.F8	PF242
4601.F9	PF269
4601.G1	PF271
4601.H4	PF007
4601.H5	PF243
4601.H8	PF007
4601.H9	PF272
4601.J2	PF273
4601.J3	PF269
4601.J4	PF274
4601.J9	PF462
4601.K0	PF385
4601.K1	PF429
4601.K2	PF464
4601.N1	PF573
4601.N5	PF526
4601.N6	PF547
4601.P2	PF590
4601.P8	PF884
4601.R1	PF798
4601.R6	PF791
4601.R7	PF792
4601.T2	PF798
4601.T3	PF877
4601.T4	PF878
4601.T6	PF874
4601.T7	PF724
4601.T8	PF876
4601.T9	PF875
4601.V0	PF873
4601.V1	PF798
4601.V7	PF793
4601.Y3	PF873
4861.32	CT012
4861.38	CT011
4861.72	CT016
9150632080	CF104
9635231180	CZ104

PIAGGIO

Ad. OE	FRITECH ref.
4755087508	CF324

PLYMOUTH

Ad. OE	FRITECH ref.
1799628	CF950
1799629	CF949
2346825	CF950
2346826	CF949
3633517	CF950
3633518	CF949
4088898	CF950
4088899	CF949
4126780	CF402
4238701	CF402
4238706	CF929
4486528	CF949
4762296	CF402
5204338	CF402
5461450	CF949
5461451	CF950
922821	CF949
922822	CF950
MA180750	CF378
MB004040	CF379
MB058553	CF269
MB128624	CF269
MB193411	CF269

PONTIAC

Ad. OE	FRITECH ref.
18001997	CF932
18003743	CF928
18004793	CF932
18004880	CF931
18004888	CF934
18004889	CF945
18004890	CF931
18005894	CF927
18007980	CF928
18007981	CF927
18008056	CF928
18008649	CF930
18009123	CF937
18010106	CF937
18011143	CF938
18012303	CF928
18012304	CF938
18012582	CF933
18012582	CF944
18013386	CF945
18014168	CF940
18014171	CF952
18014499	CF784
18014589	CF951
18019217	CF957
18020210	CF933
18020210	CF944
18029868	CF955
18029943	CF933
18029943	CF944
18039335	CF955
3492361	PF161
5462939	CF945
5464077	CF934
5465497	CF932
5465580	CF931
5469245	CF934
5469321	CF945
5472327	CF932
90235420	CF009

PORSCHE

Ad. OE	FRITECH ref.
477 611 055E	CF670
8E0 721 257B	CZ096
8E0 721 257F	CZ096
8E0 721 257M	CZ096
99735591000	PF911

PROTON

Ad. OE	FRITECH ref.
MB058553	CF269
MB128624	CF269
MB193411	CF269
MB618981	CF572

RELIANT

Ad. OE	FRITECH ref.
105E2261	CF261
120119	CF192
146028	CF335
1708706	CF261
17H4394	CF192
17H8152	CF191
37H2015	CF189
37H2016	CF190
37H6131	CF335
91935	CF336
GWC103	CF334
GWC1102	CF191
GWC1112	CF373
GWC1208	CF335
GWC126	CF189
GWC127	CF190
GWC1508	CF007
GWC1820	CF007
GWC202	CF192
UCK6975	CF373

RENAULT

Ad. OE	FRITECH ref.
08 55 891 200	PF133
44 10 001 10R	CF1020
44 10 054 09R	CF1022
44 10 074 69R	CF1021
44 100 87 38R	CF1023
46 01 100 01R	PF987
46 01 158 26R	PF990
46 01 193 72R	PF987
60 01 547 857	PF710
60 01 547 858	PF617
60 01 548 946	PF617
60 01 549 120	PF899
60 01 549 707	CF869
60 01 551 028	PF710
60 01 551 029	PF617
60 01 551 313	PF971
60 01 551 410	CF870
60 25 370 495	PF285
60 25 370 497	PF512
60 25 370 500	PF313
60 25 371 613	PF850
77 00 523 312	CT009
77 00 525 690	PF054
77 00 540 403	CF087
77 00 540 404	CF086
77 00 590 483	PF001
77 00 611 612	CT010
77 00 616 107	CT010
77 00 617 297	PF076
77 00 617 298	PF093
77 00 617 299	PF078
77 00 617 300	PF077
77 00 617 708	PF020
77 00 618 660	PF077
77 00 618 661	PF020
77 00 618 662	PF076
77 00 624 692	PF020
77 00 638 947	PF001
77 00 650 845	CF020
77 00 659 569	PF077
77 00 660 977	PF079
77 00 665 654	PF171
77 00 666 324	PF122
77 00 666 325	PF021
77 00 701 835	PF295
77 00 724 410	PF127
77 00 724 411	PF008
77 00 734 129	PF170
77 00 787 634	PF008
77 00 793 558	PF007
77 00 804 076	PF221
77 00 804 898	PF597
77 00 804 899	PF131
77 00 810 985	PF226
77 00 820 232	PF134
77 00 829 834	PF211
77 00 878 630	PF007
77 01 003 548	CF531
77 01 007 119	PF055
77 01 017 997	CF055
77 01 020 059	CF039
77 01 020 062	CF040
77 01 024 247	CF037
77 01 024 248	CF038

CROSS REFERENCES LIST

RENAULT

Ad. OE	FRITECH ref.
77 01 024 260	CF055
77 01 024 261	CF611
77 01 024 262	CF612
77 01 024 263	CF039
77 01 024 264	CF040
77 01 024 265	CF012
77 01 024 266	CF013
77 01 025 933	CF125
77 01 026 418	CF057
77 01 026 419	CF058
77 01 027 198	CF016
77 01 027 199	CF017
77 01 027 200	CF015
77 01 027 201	CF014
77 01 028 250	CF023
77 01 028 251	CF024
77 01 031 504	CF017
77 01 031 505	CF016
77 01 032 318	CF021
77 01 032 319	CF022
77 01 032 924	CF025
77 01 032 925	CF026
77 01 033 007	CF014
77 01 033 008	CF015
77 01 033 311	CF032
77 01 033 312	CF033
77 01 033 390	CF026
77 01 033 391	CF025
77 01 033 548	CF531
77 01 033 599	CF042
77 01 033 600	CF043
77 01 033 706	CF025
77 01 033 707	CF026
77 01 035 310	CF025
77 01 035 311	CF026
77 01 035 405	CF043
77 01 035 406	CF042
77 01 035 464	CF043
77 01 035 465	CF042
77 01 035 467	CF065
77 01 035 468	CF066
77 01 035 471	CF061
77 01 035 472	CF062
77 01 035 473	CF072
77 01 035 474	CF073
77 01 035 475	CF017
77 01 035 476	CF016
77 01 035 477	CF089
77 01 036 006	CF092
77 01 036 007	CF093
77 01 036 385	CF061
77 01 036 386	CF062
77 01 038 287	CF140
77 01 039 388	CF072
77 01 039 389	CF073
77 01 039 390	CF065
77 01 039 391	CF066
77 01 039 392	CF061
77 01 039 393	CF062
77 01 039 394	CF072
77 01 039 395	CF073
77 01 039 467	CF122
77 01 040 850	CF131
77 01 041 021	CF159
77 01 042 416	CF316
77 01 043 789	CF043
77 01 043 790	CF042
77 01 043 912	CF138
77 01 043 913	CF139
77 01 044 681	CF161
77 01 044 850	CF144
77 01 047 236	CF682
77 01 047 838	CF256
77 01 067 647	CF852
77 01 067 936	CF021
77 01 067 937	CF022
77 01 070 668	CF144
77 01 070 956	CF854
77 01 203 275	PF175
77 01 203 276	PF171
77 01 203 277	PF176
77 01 203 718	PF212
77 01 203 719	PF191
77 01 204 103	PF192
77 01 204 110	PF286
77 01 204 112	PF401
77 01 204 609	PF131
77 01 204 610	PF211
77 01 204 969	PF597
77 01 205 213	PF287
77 01 205 295	PF401
77 01 205 405	PF251
77 01 205 407	PF252
77 01 205 484	PF192
77 01 205 737	PF437
77 01 205 739	PF436
77 01 205 740	PF436
77 01 205 742	PF437
77 01 205 815	PF288
77 01 205 931	PF291
77 01 206 229	PF311
77 01 206 230	PF257
77 01 206 231	PF290
77 01 206 234	PF312
77 01 206 313	PF438
77 01 206 660	PF641
77 01 206 898	PF598
77 01 206 914	PF639
77 01 206 922	PF850
77 01 207 170	PF641
77 01 207 198	PF582
77 01 207 496	PF640
77 01 207 697	PF585
77 01 208 355	CF780
77 01 208 398	PF530
77 01 208 402	PF812
77 01 208 838	PF715
77 01 208 839	PF908
77 01 208 880	PF714
77 01 209 220	PF987
77 01 209 308	PF908
77 01 209 642	PF729
77 01 348 206	PF020
77 01 348 224	PF077
77 01 348 257	CT009
77 01 348 286	PF054
77 01 348 321	CT010
77 01 348 468	PF093
77 01 348 483	PF055
77 01 348 726	PF079
77 01 348 924	PF001
77 01 349 122	CF016
77 01 349 123	CF017
77 01 349 150	CF010
77 01 349 152	PF118
77 01 349 254	PF021
77 01 349 391	CF057
77 01 349 392	CF058
77 01 349 537	PF076
77 01 349 762	PF008
77 01 349 871	PF007
77 01 365 004	PF054
77 01 365 340	PF055
77 01 365 375	CF086
77 01 365 376	CF087
77 01 365 377	CF120
77 01 365 379	CF010
77 01 365 380	CF058
77 01 365 381	CF057
77 01 365 382	CF054
77 01 365 383	CF011
77 01 365 389	CF057
77 01 365 390	CF058
77 01 365 401	CF611
77 01 365 402	CF612
77 01 365 405	CF012
77 01 365 406	CF013
77 01 365 465	CF017
77 01 365 466	CF016
77 01 365 519	CF020
77 02 145 667	PF170
77 02 163 416	CF098
77 02 163 417	CF099
89 32 000 127	CF724
D6010-JG20B	PF926
D6010-JG21B	PF925
D6010-JG80A	PF926
D6010-JG80B	PF926
77 01 007 119	PF055
77 01 017 997	CF055
77 01 024 260	CF055
77 01 024 265	CF012
77 01 024 266	CF013
77 01 025 933	CF125
77 01 025 935	CF225
77 01 026 418	CF057
77 01 026 419	CF058
77 01 027 198	CF016
77 01 027 199	CF017
77 01 028 250	CF023
77 01 028 251	CF024
77 01 030 155	CF250
77 01 031 504	CF017
77 01 031 505	CF016
77 01 032 318	CF021
77 01 032 319	CF022
77 01 032 339	CF069
77 01 032 340	CF081
77 01 032 924	CF025
77 01 032 925	CF026
77 01 033 311	CF032
77 01 033 312	CF033
77 01 033 390	CF026
77 01 033 391	CF025
77 01 033 599	CF042
77 01 033 600	CF043
77 01 033 706	CF025
77 01 033 707	CF026
77 01 034 118	CF059
77 01 034 119	CF060
77 01 034 172	CF225
77 01 034 173	CF125
77 01 035 310	CF025
77 01 035 311	CF026
77 01 035 405	CF043
77 01 035 406	CF042
77 01 035 464	CF043
77 01 035 465	CF042
77 01 035 467	CF065
77 01 035 468	CF066
77 01 035 471	CF061
77 01 035 472	CF062
77 01 035 473	CF072
77 01 035 474	CF073
77 01 035 475	CF017
77 01 035 476	CF016
77 01 035 477	CF089
77 01 036 006	CF092
77 01 036 007	CF093
77 01 036 385	CF061
77 01 036 386	CF062
77 01 039 388	CF072
77 01 039 389	CF073
77 01 039 390	CF065
77 01 039 391	CF066
77 01 039 392	CF061
77 01 039 393	CF062
77 01 039 394	CF072
77 01 039 395	CF073
77 01 039 467	CF122
77 01 043 789	CF043
77 01 043 790	CF042
77 01 043 912	CF138
77 01 043 913	CF139
77 01 044 602	CF325
77 01 044 603	CF326
77 01 044 681	CF161
77 01 044 850	CF144
77 01 047 838	CF256
77 01 050 906	PF624
77 01 050 908	PF620
77 01 067 862	PF980
77 01 067 863	PF978
77 01 067 864	PF979
77 01 067 936	CF021
77 01 067 937	CF022
77 01 070 668	CF144
77 01 070 956	CF854
77 01 204 609	PF131
77 01 204 610	PF211
77 01 204 969	PF597
77 01 205 286	PF502
77 01 205 288	PF503
77 01 205 405	PF251
77 01 205 407	PF252
77 01 205 739	PF436
77 01 205 740	PF436
77 01 205 742	PF437
77 01 205 784	PF504
77 01 205 815	PF288
77 01 206 313	PF438
77 01 207 198	PF582
77 01 207 697	PF585
77 01 207 979	PF806
77 01 208 266	PF621
77 01 208 267	PF623
77 01 208 355	CF780
77 01 208 493	PF622
77 01 209 220	PF987
77 01 210 047	PF980
77 01 210 049	PF979
77 01 210 056	PF624
77 01 210 057	PF620
77 01 348 206	PF020
77 01 348 224	PF077
77 01 348 257	CT009
77 01 348 286	PF054
77 01 348 321	CT010
77 01 348 468	PF093
77 01 348 483	PF055
77 01 348 726	PF079
77 01 348 924	PF001
77 01 349 122	CF016
77 01 349 123	CF017
77 01 349 150	CF010
77 01 349 152	PF118
77 01 349 254	PF021
77 01 349 391	CF057
77 01 349 392	CF058
77 01 349 537	PF076
77 01 349 762	PF008
77 01 349 871	PF007
77 01 365 004	PF054
77 01 365 340	PF055
77 01 365 377	CF120
77 01 365 379	CF010
77 01 365 380	CF058
77 01 365 381	CF057
77 01 365 382	CF054
77 01 365 383	CF011
77 01 365 389	CF057
77 01 365 390	CF058
77 01 365 405	CF012
77 01 365 406	CF013
77 01 365 465	CF017
77 01 365 466	CF016
77 01 365 519	CF020
77 01 365 840	CF157
77 02 145 667	PF170
77 02 163 416	CF098
77 02 163 417	CF099

RENAULT LCV

Ad. OE	FRITECH ref.
08 55 891 200	PF133
46 01 100 01R	PF987
46 01 193 72R	PF987
50 00 391 976	PF289
50 00 393 731	PF426
50 01 000 446	CF157
50 01 847 577	PF204
77 00 523 312	CT009
77 00 590 483	PF001
77 00 611 612	CT010
77 00 616 107	CT010
77 00 617 297	PF076
77 00 617 298	PF093
77 00 617 299	PF078
77 00 617 300	PF077
77 00 617 708	PF020
77 00 618 660	PF077
77 00 618 661	PF020
77 00 618 662	PF076
77 00 624 692	PF020
77 00 638 947	PF001
77 00 650 845	CF020
77 00 659 569	PF077
77 00 660 977	PF079
77 00 666 325	PF021
77 00 701 834	PF405
77 00 724 410	PF127
77 00 724 411	PF008
77 00 734 129	PF170
77 00 787 634	PF008
77 00 793 558	PF007
77 00 804 898	PF597
77 00 804 899	PF131
77 00 820 232	PF134
77 00 829 834	PF211
77 00 878 630	PF007

ROVER

Ad. OE	FRITECH ref.
120119	CF192
136451	CF261
146028	CF335
157671	CF224
17H4394	CF192
17H6908	CF718
17H6909	CF717
17H8081	CF418
17H8152	CF191
37H2015	CF189
37H2016	CF190
37H4641	CF380
37H6131	CF335
37H6137	CF417
519803	CF417
7H4903	CF282
GMC181	PF475
GMC195	PF112
GMC227	PF112
GMC232	PF225
GMC233	PF130
GMC243	PF111
GMC248	PF224
GMC90358	PF262
GMC90372	PF529
GWC102	CF336
GWC103	CF334
GWC1101	CF262
GWC1102	CF191

ROVER

Ad. OE	FRITECH ref.
GWC1103	CF348
GWC1110	CF261
GWC1112	CF373
GWC1121	CF416
GWC1124	CF374
GWC1127	CF607
GWC1129	CF380
GWC1132	CF442
GWC1136	CF728
GWC1139	CF091
GWC1140	CF388
GWC1142	CF408
GWC1143	CF409
GWC1144	CF443
GWC1145	CF207
GWC1146	CF206
GWC1147	CF396
GWC1148	CF395
GWC1149	CF163
GWC1150	CF206
GWC1151	CF207
GWC1152	CF440
GWC1153	CF441
GWC1154	CF224
GWC1155	CF091
GWC1160	CF404
GWC118	CF385
GWC119	CF602
GWC1202	CF377
GWC1205	CF428
GWC1208	CF335
GWC1211	CF444
GWC1212	CF443
GWC122	CF414
GWC123	CF415
GWC126	CF189
GWC127	CF190
GWC1311	CF397
GWC133	CF404
GWC134	CF085
GWC1502	CF417
GWC1518	CF408
GWC1519	CF409
GWC1520	CF234
GWC1521	CF235
GWC1715	CF202
GWC1821	CF085
GWC187	CF395
GWC188	CF396
GWC202	CF192
GWC501	CF719
GWC502	CF720
GWC901634	CF253
GWC901635	CF252
JHM37	CF446
JHM38	CF445
MBU1008	CF420
RTC3623	CF388
RTC3625	CF419
SJC100340	PF529
SML000020	CF253
SML000030	CF252
SML100080	CF253
SML100090	CF252
UCK6975	CF373

SAAB

Ad. OE	FRITECH ref.
4836698	PF522
5233705	PF642
7162421	CF191
7328099	CF262
8931875	PF062
8935439	PF062
8935934	PF062
8948127	PF062
8948135	PF061
9100629	PF061
93172088	PF520
93172089	PF521
GWC102	CF336
GWC103	CF334

SEAT

Ad. OE	FRITECH ref.
144372	CF305
1H0 611 053	CF121
1H0 611 053A	CF725
1H1 611 019A	PF041
1H1 611 019B	PF039
1H1 611 019C	PF231
1H1 698 019A	PF609
1J0 721 261A	CZ026
1J0 721 261A	CZ081
1J0 721 261D	CZ076
1J0 721 261E	CZ026
1J0 721 261E	CZ081
1J0 721 261F	CZ026
1J1 614 019	PF234
1J1 614 019A	PF241
1J1 614 019C	PF799
1J1 614 019F	PF799
1J1 721 388A	PZ064
1J1 721 388A	PZ107
1J1 721 388C	PZ064
1J1 721 388C	PZ107
1J1 721 388D	PZ064
1J1 721 388D	PZ107
1J1 721 388E	PZ064
1J1 721 388E	PZ107
1J2 614 019	PF818
1K0 721 261	CZ080
1K0 721 261A	CZ080
1K0 721 261B	CZ080
1K0 721 261C	CZ080
1K0 721 261F	CZ080
1K0 721 261G	CZ080
1K0 721 261H	CZ080
1K0 721 261J	CZ080
1K0 721 261K	CZ080
1K0 721 261L	CZ080
1K0 721 261N	CZ080
1K0 721 261Q	CZ080
1K0 721 261R	CZ080
1k1 614 019D	PF869
1K1 614 019K	PF869
309 611 051	CF000
309 611 053	CF000
331 611 051A	CF000
331 611 053	CF000
331 611 053A	CF000
331 611 053B	CF000
357 611 019A	PF039
357 611 019A	PF248
357 611 019B	PF248
357 721 261	CZ025
357 721 261A	CZ025
357 721 261B	CZ025
357 721 261	CZ093
357 721 261A	CZ093
357 721 261B	CZ093
3899782	CT007
3899783	CF357
3936245	CF201
3980011	CF002
3981135	PF089
3A1 698 019	PF493
3A1 721 388	PZ062
4231877	PF013
4239978	PF013
4242011	PF013
4285587	PF013
4340183	PF014
4341665	PF013
4341759	PF014
4341935	PF014
4341995	PF013
4372983	PF013
4372984	PF014
4382336	PF014
4394900	PF003
4455399	CF351
4462791	CT005
5138157	PF047
5138272	PF053
5138278	PF007
5141132	CT004
5Z0 611 019N	PF993
6K1 721 401	PZ099
6K2 698 019	PF583
6N0 611 053	CF239
6N0 614 019	PF310
6N1 614 019A	PF494
6N1 721 388A	PZ148
6Q0 611 019A	PF329
6Q0 611 019E	PF463
6Q0 611 019G	PF993
6Q0 611 019Q	PF973
6Q0 611 019R	PF973
6Q0 611 053C	CF239
6Q0 721 261	CZ086
6Q0 721 261	CZ098
6Q0 721 261A	CZ077
6Q0 721 261A	CZ099
6Q0 721 261C	CZ086
6Q0 721 261C	CZ098
6Q0 721 261D	CZ077
6Q0 721 261D	CZ099
6Q0 721 261E	CZ086
6Q0 721 261E	CZ098
6Q0 721 261F	CZ077
6Q0 721 261F	CZ099
6Q0 721 388	PZ077
6Q0 721 388A	PZ077
6Q0 721 388C	PZ077
6QE 611 053	CF239
6QE 721 261	CZ099
6R0 611 053B	CF1012
6R0 721 261	CZ086
6R0 721 261	CZ098
6X1 721 388	PZ148
790049	CF002
790996	CT005
793304	PF003
793305	PF013
793332	PF014
7M0 611 019	PF253
7M0 611 019A	PF600
7M1 611 019	PF309
7M2 611 019A	PF600
7M3 372 401	PZ091
7M3 611 019	PF822
7M3 611 019A	PF823
7M3 611 019B	PF824
7M3 611 019C	PF823
7M3 611 019D	PF824
7M3 721 401A	PZ091
7M4 611 019A	PF600
861 611 051A	CF080
861 611 053	CF107
861 611 053A	CF080
8E0 611 021	PF534
8E0 611 021A	PF826
8E0 611 021B	PF826
8E0 721 257Q	CZ083
BD16810200	PF011
DG72000100	CF591
EA7220001	CF002
EA72200100	CF002
FA16810202	PF015
FA75300400	CT001
GA16800201	PF068
JA72000100	CF259
JA72000101	CF259
JA75300400	CT002
LF168102 00	PF003
RF71500403	PF047
RF72000200	CF347
SE0003963253	CF004
SE021715003A	PF007
SE021720001A	CF068
SE022720002A	CF201
SE024720002B	CF305
SE025720002A	CF004
SE028720001A	CF004
SE029720001A	CF305
SE138715004	PF053
SE141168700	CT008
SE141715004	PF053
SE141715004B	PF018

SEAT LCV

Ad. OE	FRITECH ref.
191 611 019	PF005
192 611 019	PF005
1H1 611 019B	PF039
1J0 611 053	CF127
1J0 721 261A	CZ026
1J0 721 261A	CZ081
1J0 721 261E	CZ026
1J0 721 261E	CZ081
1J0 721 261F	CZ026
1J0 721 261F	CZ081
357 611 019A	PF039
357 611 019A	PF248
357 611 019B	PF248
357 611 053B	CF127
3A0 611 053	CF127
6K1 721 401	PZ099
6K2 698 019	PF583
6Q0 721 261A	CZ099
6Q0 721 261D	CZ099
6Q0 721 261F	CZ099
6QE 721 261	CZ099
SE0003963253	CF004
SE024720002B	CF305
SE025720002A	CF004
SE028720001A	CF004
SE029720001A	CF305
SE141168700	CT008
SE141715004B	PF018

SKODA

Ad. OE	FRITECH ref.
110 595 031	CF268
110 595 032	CF268
113 595 030	CF268
114 592 012	PF359
114 595 012	PF359
114 595 031	CF244
114 595 032	CF244
115 595 030	CF240
115 595 032	CF126
1H0 611 053	CF121
1J0 611 053	CF127
1J0 721 261A	CZ026
1J0 721 261A	CZ081
1J0 721 261D	CZ076
1J1 614 019	PF234
1J1 614 019A	PF241
1J1 614 019C	PF799
1J1 614 019D	PF910
1J1 614 019F	PF799
1J1 614 019G	PF910
1J1 721 388A	PZ064
1J1 721 388A	PZ107
1J1 721 388C	PZ064
1J1 721 388C	PZ107
1J1 721 388D	PZ064
1J1 721 388D	PZ107
1J1 721 388E	PZ064
1J1 721 388E	PZ107
1J2 614 019	PF818
1K0 721 261	CZ080
1K0 721 261A	CZ080
1K0 721 261B	CZ080
1K0 721 261C	CZ080
1K0 721 261F	CZ080
1K0 721 261G	CZ080
1K0 721 261H	CZ080
1K0 721 261J	CZ080
1K0 721 261K	CZ080
1K0 721 261L	CZ080
1K0 721 261N	CZ080
1K0 721 261Q	CZ080
1K0 721 261R	CZ080
1K1 614 019	PF647
1K1 614 019D	PF869
1K1 614 019F	PF870
1K1 614 019K	PF869
1K1 619 019B	PF646
1U0 721 261A	CZ117
357 611 053B	CF127
3A0 611 053	CF127
443 611 309	CF268
5Z0 611 019N	PF993
6N0 611 053	CF239
6Q0 611 019A	PF329
6Q0 611 019B	PF661
6Q0 611 019C	PF330
6Q0 611 019E	PF463
6Q0 611 019G	PF993
6Q0 611 019P	PF661
6Q0 611 019Q	PF973
6Q0 611 019R	PF973
6Q0 611 053C	CF239
6Q0 721 261	CZ086
6Q0 721 261	CZ098
6Q0 721 261A	CZ077
6Q0 721 261A	CZ099
6Q0 721 261C	CZ086
6Q0 721 261C	CZ098
6Q0 721 261D	CZ077
6Q0 721 261D	CZ099
6Q0 721 261E	CZ086
6Q0 721 261E	CZ098
6Q0 721 261F	CZ077
6Q0 721 261F	CZ099
6Q0 721 388	PZ077
6Q0 721 388A	PZ077
6Q0 721 388C	PZ077
6QE 611 053	CF239
6QE 721 261	CZ099
6R0 611 053B	CF1012
6R0 721 261	CZ086
6R0 721 261	CZ098
6U0 611 019	PF039
6U0 611 053	CF149
6U0 611 053A	CF150
6U0 611 053B	CF126
6U0 698 019	PF495
861 611 053	CF107

CROSS REFERENCES LIST

Ad. OE	FRITECH ref.
SKODA	
8E0 611 021	PF534
8E0 611 021A	PF826
8E0 611 021B	PF826
8E0 721 257A	CZ074
8E0 721 257A	CZ096
8E0 721 257B	CZ074
8E0 721 257B	CZ096
8E0 721 257E	CZ074
8E0 721 257E	CZ096
8E0 721 257F	CZ074
8E0 721 257F	CZ096
8E0 721 257M	CZ074
8E0 721 257M	CZ096
8E0 721 257N	CZ074
8E0 721 257N	CZ096
8E1 721 401	PZ085
8E1 721 401	PZ105
8E1 721 401AG	PZ085
8E1 721 401AG	PZ105
8E1 721 401AK	PZ105
8E1 721 401C	PZ085
8E1 721 401C	PZ105
8E1 721 401G	PZ085
8E1 721 401G	PZ105
8E1 721 401K	PZ085
8E1 721 401K	PZ105
SKODA LCV	
1H0 611 053	CF121
5Z0 611 019N	PF993
6Q0 611 019A	PF329
6Q0 611 019B	PF661
6Q0 611 019C	PF330
6Q0 611 019E	PF463
6Q0 611 019G	PF993
6Q0 611 019Q	PF973
6Q0 611 019R	PF973
6Q0 721 261	CZ086
6Q0 721 261	CZ098
6Q0 721 261A	CZ077
6Q0 721 261A	CZ099
6Q0 721 261C	CZ086
6Q0 721 261C	CZ098
6Q0 721 261D	CZ077
6Q0 721 261D	CZ099
6Q0 721 261E	CZ086
6Q0 721 261E	CZ098
6Q0 721 261F	CZ077
6Q0 721 261F	CZ099
6Q0 721 388	PZ077
6Q0 721 388A	PZ077
6Q0 721 388C	PZ077
6QE 721 261	CZ099
6R0 721 261	CZ098
SMART	
0004331V002	CF570
0004332V002	CF571
0005702V001	PF597
0005702V005	PF550
0006644V001	CF568
0006645V001	CF569
0012158V001	PF550
0012158V002	PF550
0015283V001	CF568
0015283V001	CF569
4512900119	PF896
4512900319	PF896
4514200018 (KIT)	CF860
4514200018 (KIT)	CF861
4534200018	CF1023
4534200218	CF1022
4544200018	CF849
SSANGYONG	
483 110 50 00	CF781
483 110 50 10	CF872
483 120 50 00	CF095
SUBARU	
25177-GA340	CF452
25177-GA350	CF454
25177-GA360	CF453
25177-GA380	CF613
26256-AA000	CF564
26256-AA010	CF701
26256-AA011	CF701
26705-AE000	CF998
26705-FG000	CF1009
4755012120	CF1025
51100-86G10	PF381
53401-83E00	CF677
6252-00170	CF452
6252-00173	CF452
6252-00180	CF613
6252-00182	CF613
6252-00370	CF454
6252-00372	CF454
6252-00470	CF453
7251-77310	CF286
7251-77750	CF292
7251-77751	CF292
SUZUKI	
00000A00159	CF251
00000A00529	CF773
00000A01221	CF251
23810-79J00	PZ145
23810-79J01	PZ145
23810-79J20	PZ145
23810-79J21	PZ145
23820-73J00	CZ103
51100-57K00	PF901
51100-62J10	PF886
51100-63J20	PF964
51100-63J30	PF964
51100-69K00	PF848
51100-69K10	PF849
51100-79J00	PF848
51100-79J10	PF849
51100-80G71	PF796
51100-81A01	PF851
51100-81A60	PF577
51100-81A62	PF577
51100-83E00	PF380
51100-83E10	PF381
51100-84A30	PF851
51100-84A60	PF577
51100-84A61	PF577
51100-86G00	PF935
53400-78410	CF635
53400-80040	CF566
53401-56A00	CF567
53401-56B00	CF513
53401-56B60	CF554
53401-60A00	CF468
53401-62J00	CF808
53401-62J01	CF808
53401-63B00	CF543
53401-65D00	CF821
53401-65J00	CF822
53401-67D00	CF821
53401-68L00	CF925
53401-70B11	CF979
53401-70B12	CF979
53401-70C00	CF991
53401-70F10	CF258
53401-75F00	CF694
53401-76G00	CF715
53401-76G01	CF715
53401-76G02	CF715
53401-80040	CF565
53401-80050	CF466
53401-81A00	CF716
53401-82030	CF301
53401-83040	CF561
53401-83310	CF509
53401-83E00	CF677
53401-84010	CF634
53401-86040	CF291
53401-M70B11	CF979
53401-M70F10	CF258
53401-M76G00	CF715
53402-56B00	CF303
53402-56B60	CF555
53402-60A00	CF467
53402-63B00	CF544
53402-65D00	CF822
53402-70B11	CF258
53402-70B12	CF258
53402-70C00	CF990
53402-80050	CF465
53402-81A00	CF464
53402-83040	CF562
53402-83300	CF512
53402-84M00	CF708
53402-M68K00	CF292
53402-M70B11	CF258
SUZUKI LCV	
53400-80040	CF566
53401-50F00	CF973
53401-80040	CF565
53401-81A00	CF716
53401-85220	CF289
53402-50F00	CF972
53402-81A00	CF464
53402-85220	CF288
TALBOT	
13545500	CF030
13635900	CF603
16851400	CF601
17474200	CF027
17511000	CF601
17680000	CF036
17689400	CF020
2235.1X	CF338
2261.4P	CF337
2261.9U	CF587
43200900	CF533
43276300	PF089
4402.44	CF036
4402.58	CF270
4402.70	CF157
4402.81	CF210
4501.3P	CF603
4601.83	PF031
4601.88	PF031
4883.7Z	CF030
5454.08	CF337
5454.09	CF587
5505.4800	CF337
5505.4900	CF587
5505.5200	CF338
5585.6T	CF601
5887.6A	CF027
7080017	CF335
750611216	CF359
7910028992	CF031
7910028993	CF056
9150528080	PF082
9150631980	CF530
9150632080	CF104
95569739	CF031
VWC122	CF335
VWC125	CF359
VWC147	CF359
TATA	
277942300125	CF543
277942300126	CF544
277942300130	CF543
TOYOTA	
31410-12330	PZ151
31410-12340	PZ151
31410-12350	PZ151
31410-12380	PZ151
31410-12381	PZ151
31470-12090	CZ126
31470-12091	CZ126
31470-12092	CZ126
31470-12093	CZ126
31470-12111	CZ133
31470-12140	CZ133
31470-20091	CZ126
31470-26020	CZ126
31470-32030	CZ127
31470-32031	CZ127
31470-32032	CZ127
47025 09030	PF794
47025-09010	PF853
47201-05080	PF613
47201-05090	PF789
47201-05091	PF962
47201-05110	PF790
47201-05111	PF790
47201-09010	PF552
47201-09020	PF553
47201-09050	PF936
47201-09060	PF816
47201-09070	PF817
47201-09300	PF967
47201-09340	PF552
47201-09350	PF553
47201-09370	PF970
47201-09380	PF970
47201-09480	PF817
47201-09500	PF967
47201-09510	PF966
47201-0F010	PF789
47201-0F011	PF789
47201-0F012	PF962
47201-0F030	PF790
47201-0F031	PF790
47201-0F032	PF790
47201-12820	PF977
47201-13110	PF814
47201-19015	PF967
47201-19025	PF969
47201-19055	PF969
47201-19065	PF968
47201-1A150	PF815
47201-1A360	PF814
47201-1A370	PF814
47201-42020	PF905
47201-42070	PF905
47201-42080	PF905
47201-42230	PF643
47201-42231	PF643
47201-42240	PF643
47201-44140	PF643
47201-52330	PF860
47201-52460	PF957
47207-52011	PF796
47207-52021	PF797
47207-52041	PF959
47550-02050	CF840
47550-05010	CF248
47550-05020	CF647
47550-05030	CF577
47550-05040	CF577
47550-06010	CF490
47550-09040	CF802
47550-09070	CF996
47550-09090	CF996
47550-09100	CF827
47550-09101	CF827
47550-09130	CF1001
47550-09140	CF1018
47550-0B800	CF628
47550-0D010	CF438
47550-0E900	CF758
47550-0H800	CF549
47550-0N900	CF966
47550-10042	CF273
47550-10080	CF648
47550-12020	CF345
47550-12060	CF346
47550-12120	CF1025
47550-14020	CF431
47550-16011	CF413
47550-16030	CF214
47550-16060	CF807
47550-19045	CF345
47550-19095	CF273
47550-19096	CF273
47550-19097	CF273
47550-19105	CF413
47550-19106	CF413
47550-19115	CF412
47550-19116	CF412
47550-19117	CF412
47550-19125	CF345
47550-19135	CF346
47550-19145	CF431
47550-19155	CF214
47550-19165	CF412
47550-20120	CF214
47550-20121	CF214
47550-20130	CF212
47550-20141	CF212
47550-20150	CF314
47550-20211	CF707
47550-22060	CF431
47550-26090	CF290
47550-26100	CF473
47550-26110	CF557
47550-26130	CF992
47550-28020	CF458
47550-29026	CF346
47550-29033	CF346
47550-29075	CF431
47550-29105	CF345
47550-29106	CF345
47550-29115	CF346
47550-29175	CF473
47550-29265	CF290
47550-29275	CF473

TOYOTA

Ad. OE	FRITECH ref.
47550-29305	CF500
47550-30100	CF226
47550-30120	CF459
47550-30130	CF458
47550-32020	CF456
47550-33010	CF490
47550-35160	CF500
47550-35170	CF510
47550-35200	CF557
47550-35210	CF460
47550-35260	CF992
47550-39115	CF290
47550-39125	CF500
47550-39175	CF226
47550-39215	CF459
47550-39275	CF458
47550-39285	CF212
47550-42010	CF832
47550-42020	CF798
47550-47010	CF857
47550-52010	CF579
47550-52011	CF788
47550-60120	CF460
47550-69105	CF459
47570-02050	CF841
47570-02080	CF841
47570-05010	CF249
47570-05020	CF646
47570-05030	CF578
47570-05040	CF578
47570-06010	CF491
47570-10050	CF636
47570-16010	CF215
47570-16040	CF806
47570-19035	CF215
47570-20030	CF215
47570-20031	CF215
47570-20040	CF213
47570-20051	CF213
47570-20060	CF313
47570-20101	CF708
47570-32010	CF213
47570-32020	CF457
47570-33010	CF491
47570-39115	CF213
47570-47010	CF858
47570-52010	CF787
47570-52011	CF580
47750-19155	CF214
47750-32010	CF212
94206594	CF644

TOYOTA LCV

Ad. OE	FRITECH ref.
21470-26020	CZ126
31470-12090	CZ126
31470-12091	CZ126
31470-12092	CZ126
31470-12093	CZ126
31470-20091	CZ126
47550-09070	CF996
47550-12020	CF345
47550-12060	CF346
47550-19045	CF345
47550-19125	CF345
47550-19135	CF346
47550-26090	CF290
47550-26100	CF473
47550-26110	CF557
47550-26130	CF992
47550-28020	CF458
47550-29026	CF346
47550-29033	CF346
47550-29105	CF345
47550-29106	CF345
47550-29115	CF346
47550-29175	CF473
47550-29265	CF290
47550-29275	CF473
47550-29305	CF500
47550-30100	CF226
47550-30120	CF459
47550-30130	CF458
47550-35160	CF500
47550-35170	CF510
47550-35190	CF582
47550-35200	CF557
47550-35260	CF992
47550-39115	CF290
47550-39125	CF500
47550-39165	CF769
47550-39166	CF769
47550-39175	CF226
47550-39215	CF459
47550-39275	CF458
47550-60120	CF460
47550-69105	CF459
SU001-A1125	PF878

VOLKSWAGEN

Ad. OE	FRITECH ref.
113 611 053A	CF194
113 611 053B	CF194
113 611 057B	CF193
113 611 067	CF300
131 611 055	CF263
131 611 055A	CF263
131 611 057	CF193
131 611 057A	CF193
131 611 057B	CF193
171 611 019	PF058
171 611 019	PF059
171 611 019A	PF059
171 611 019B	PF058
171 611 019C	PF059
171 611 019D	PF058
171 611 019E	PF059
171 611 019H	PF059
171 611 019N	PF059
171 611 051A	CF001
171 611 051B	CF001
171 611 053	CF001
171 611 053A	CF001
171 611 053B	CF001
191 611 019	PF005
192 611 019	PF005
1H0 611 053	CF121
1H0 611 053A	CF725
1H0 611 053B	CF532
1H0 611 053C	CF537
1H1 611 019A	PF041
1H1 611 019B	PF039
1H1 611 019C	PF231
1H1 698 019A	PF609
1H1 698 019B	PF549
1H1 721 388B	PZ150
1H1 721 401	PZ061
1H1 721 401A	PZ150
1H1 721 401B	PZ061
1J0 611 053	CF127
1J0 721 261A	CZ026
1J0 721 261A	CZ081
1J0 721 261D	CZ076
1J0 721 261E	CZ026
1J0 721 261E	CZ081
1J0 721 261F	CZ026
1J0 721 261F	CZ081
1J0 721 261H	CZ076
1J0 721 261J	CZ076
1J1 614 019	PF234
1J1 614 019A	PF241
1J1 614 019C	PF799
1J1 614 019F	PF799
1J1 721 388A	PZ064
1J1 721 388A	PZ107
1J1 721 388C	PZ064
1J1 721 388C	PZ107
1J1 721 388D	PZ064
1J1 721 388D	PZ107
1J1 721 388E	PZ064
1J1 721 388E	PZ107
1J2 614 019	PF818
1K0 721 261	CZ080
1K0 721 261A	CZ080
1K0 721 261B	CZ080
1K0 721 261C	CZ080
1K0 721 261F	CZ080
1K0 721 261G	CZ080
1K0 721 261H	CZ080
1K0 721 261J	CZ080
1K0 721 261K	CZ080
1K0 721 261L	CZ080
1K0 721 261N	CZ080
1K0 721 261Q	CZ080
1K0 721 261R	CZ080
1K1 614 019	PF647
1K1 614 019D	PF869
1K1 614 019F	PF870
1K1 614 019K	PF869
1K1 614 019M	PF961
1K1 619 019B	PF646
309 611 051	CF000
309 611 053	CF000
321 611 019C	PF060
321 611 019D	PF060
321 611 019E	PF293
321 611 019N	PF177
322 611 019	PF179
331 611 051A	CF000
331 611 053	CF000
331 611 053A	CF000
331 611 053B	CF000
357 611 019	PF033
357 611 019A	PF039
357 611 019A	PF248
357 611 019B	PF248
357 611 053B	CF127
357 721 261	CZ025
357 721 261A	CZ025
357 721 261B	CZ025
357 721 261	CZ093
357 721 261A	CZ093
357 721 261B	CZ093
361 611 067A	CF300
3A0 611 053	CF127
3A1 698 019	PF493
3A1 721 388	PZ062
4D0 611 021	PF492
4D0 611 021A	PF492
4D0 611 021B	PF277
5C0 611 053	CF1002
5C0 611 053A	CF1002
5Z0 611 019L	PF887
5Z0 611 019N	PF993
5Z0 611 019P	PF887
5Z1 614 105P	PF887
6K1 721 401	PZ099
6K2 698 019	PF583
6N0 611 053	CF239
6N0 614 019	PF310
6N1 614 019A	PF494
6N1 614 019B	PF548
6N1 721 388A	PZ148
6Q0 611 019A	PF329
6Q0 611 019B	PF661
6Q0 611 019E	PF463
6Q0 611 019G	PF993
6Q0 611 019J	PF887
6Q0 611 019P	PF661
6Q0 611 019Q	PF973
6Q0 611 019R	PF973
6Q0 611 053B	CF121
6Q0 611 053C	CF239
6Q0 721 261	CZ086
6Q0 721 261	CZ098
6Q0 721 261A	CZ077
6Q0 721 261A	CZ099
6Q0 721 261C	CZ086
6Q0 721 261C	CZ098
6Q0 721 261D	CZ077
6Q0 721 261D	CZ099
6Q0 721 261E	CZ086
6Q0 721 261E	CZ098
6Q0 721 261F	CZ077
6Q0 721 261F	CZ099
6Q0 721 388	PZ077
6Q0 721 388A	PZ077
6Q0 721 388C	PZ077
6QE 611 053	CF239
6QE 721 261	CZ099
6R0 721 261	CZ086
6R0 721 261	CZ098
6X1 614 019	PF645
6X1 614 019A	PF825
6X1 721 388	PZ148
7H0 611 019B	PF960
7L0 611 019A	PF960
7L0 611 019E	PF960
7M0 611 019	PF253
7M0 611 019A	PF600
7M1 611 019	PF309
7M2 611 019A	PF600
7M3 611 019	PF822
7M3 721 401	PZ091
7M3 721 401A	PZ091
7M4 611 019A	PF600
811 611 019B	PF059
811 611 019E	PF178
811 611 019Q	PF179
839 611 021	PF293
843 611 021A	PF060
843 611 021C	PF293
843 611 021D	PF060
861 611 051A	CF080
861 611 053	CF107
861 611 053A	CF080
8D0 611 021A	PF223
8D0 611 021B	PF223
8D0 611 021C	PF383
8D0 721 257	CZ052
8D0 721 257	CZ097
8D1 721 401	PZ076
8D1 721 401	PZ106
8D1 721 401B	PZ076
8D1 721 401B	PZ106
8D2 611 021	PF278
8E0 611 021	PF534
8E0 611 021A	PF826
8E0 611 021B	PF826
8E0 721 257A	CZ074
8E0 721 257A	CZ096
8E0 721 257B	CZ074
8E0 721 257B	CZ096
8E0 721 257E	CZ074
8E0 721 257E	CZ096
8E0 721 257F	CZ074
8E0 721 257F	CZ096
8E0 721 257M	CZ074
8E0 721 257M	CZ096
8E0 721 257N	CZ074
8E0 721 257N	CZ096
8E1 721 401	PZ085
8E1 721 401	PZ105
8E1 721 401AG	PZ085
8E1 721 401AG	PZ105
8E1 721 401AK	PZ105
8E1 721 401C	PZ085
8E1 721 401C	PZ105
8E1 721 401G	PZ085
8E1 721 401G	PZ105
8E1 721 401K	PZ085
8E1 721 401K	PZ105

VOLKSWAGEN LCV

Ad. OE	FRITECH ref.
171 611 019	PF058
171 611 019	PF059
171 611 019A	PF059
171 611 019B	PF058
171 611 019C	PF059
171 611 019D	PF058
171 611 019E	PF059
171 611 019H	PF059
171 611 019N	PF059
171 611 051A	CF001
171 611 051B	CF001
171 611 053	CF001
171 611 053A	CF001
171 611 053B	CF001
191 611 019	PF005
192 611 019	PF005
1H0 611 053	CF121
1H1 611 019A	PF041
1H1 611 019B	PF039
1H1 611 019C	PF231
1H1 611 019D	PF039
1H1 611 019E	PF231
1H1 611 019F	PF039
1H1 611 019G	PF231
1J0 611 053	CF127
1J0 721 261A	CZ081
1J0 721 261D	CZ076
1J0 721 261E	CZ081
1J0 721 261F	CZ081
1J0 721 261H	CZ076
1J0 721 261J	CZ076
1K0 721 261	CZ080
1K0 721 261A	CZ080
1K0 721 261B	CZ080
1K0 721 261C	CZ080
1K0 721 261F	CZ080
1K0 721 261G	CZ080
1K0 721 261H	CZ080
1K0 721 261J	CZ080
1K0 721 261K	CZ080
1K0 721 261L	CZ080
1K0 721 261N	CZ080
1K0 721 261Q	CZ080
1K0 721 261R	CZ080
1K1 614 019	PF647
1K1 614 019D	PF869
1K1 614 019K	PF869
211 611 047D	CF172
211 611 047E	CF172
211 611 047F	CF172
251 611 021C	PF040
251 611 047	CF172
281 611 047	CF228
291 611 047	CF229
291 611 047B	CF545
2D0 611 019	PF819
2D0 611 019A	PF304
2D0 611 019B	PF819
2D0 611 019D	PF580
2D0 611 019E	PF820
2D0 611 019F	PF907
2D0 721 261	CZ053
2D0 721 261A	CZ053
2D0 721 401	PZ075
2E0 611 017	PF897
2E0 611 017C	PF982
2H0 611 053	CF926
309 611 051	CF000
309 611 053	CF000

CROSS REFERENCES LIST

Ad. OE	FRITECH ref.
VOLKSWAGEN LCV	
331 611 051A	CF000
331 611 053	CF000
331 611 053A	CF000
331 611 053B	CF000
357 611 019	PF033
357 611 019A	PF039
357 611 019A	PF248
357 611 019B	PF248
357 611 053B	CF127
357 721 261	CZ025
357 721 261A	CZ025
357 721 261B	CZ025
357 721 261	CZ093
357 721 261A	CZ093
357 721 261B	CZ093
3A0 611 053	CF127
3A1 698 019	PF493
6K1 721 401	PZ099
6K2 698 019	PF583
6N0 611 053	CF239
6N0 614 019	PF310
6N1 614 019A	PF494
6Q0 611 019E	PF463
6Q0 611 053C	CF239
6Q0 721 261A	CZ099
6Q0 721 261D	CZ099
6Q0 721 261F	CZ099
6QE 611 053	CF239
6QE 721 261	CZ099
6U0 698 019	PF495
701 611 019	PF434
701 611 047	CF246
701 721 401	PZ082
701 721 401A	PZ149
701 721 401B	PZ149
721 611 047	CF167
7D0 611 019	PF541
7D0 611 019A	PF393
7D0 611 019B	PF821
7E0 721 261	CZ120
7H0 721 261A	CZ120
7H0 721 261B	CZ120
7H0 721 261C	CZ120
7M0 611 019	PF253
7M1 611 019	PF309
811 611 019B	PF059
861 611 051A	CF080
861 611 053	CF107
861 611 053A	CF080
J47550-26090	CF290
J47550-35170	CF510
VOLVO	
12058939	PF063
12058947	PF064
1212406	PF071
1273681	CZ051
1329740	PF124
13307996	PF063
13308002	PF064
13877790	PF172
30863323	PF551
3104438	CF076
32673147	CF196
3277831	CF123
32778318	CF123
3342955	PF174
33434374	CF164
33434382	CF165
3345111	PF174
33451113	PF174
3345682	PF260
3502600	CZ085
35026004	CZ085
35169879	PF172
670404	CF265
671216	CF198
673371	CF364
68197490	PF172
6843128	CZ085
68431287	CZ085
6843913	CZ051
687462	PF071
8601783	CZ051
8602303	PF595
8602304	PF596
8602305	PF644
8602362	PF551
8602363	PF513
8603307	CZ051
91577379	PF595
91578856	PF596
9181017	CZ085
9203845	PF644
ZASTAVA	
1611005	PF092
4065993	CZ005
4121616	CF002
4121621	CF591
4168151	PF011
4188216	CZ005
4188216G	CZ101
4190178G	PZ111
4191164	CZ005
4208251	PZ010
4210962	PF011
4264373	PF044
4264934	PF044
4342112	PF044
4342465	PF044
4347258	CF002
4368051	PF044
4368052	PF044
4373614	CF002
4374129	PF045
4374780	PF044
4374781	PF044
4379293	PF044
4379471	CF591
4379876	CT001
4394460	CF002
4394780	PF044
4394890	PF044
4394899	PF044
4394900	PF003
4396086	PF044
4398074	CT001
4398200	PF044
4398743	PF044
4410503	PF050
7613105	PF050
7621101	CF002
7631110	CT001
790204	PF050
790215	CF002
791459	CT001
792987	PF050
793289	PF045
793291	PF045
793301	PF044
793302	PF044
793304	PF003
LF168102.00	PF003
ATE	
010211	PF326
010530	PF490
010531	PF307
010569	PF426
010646	PF615
010647	PF614
010652	PF398
010653	PF394
010654	PF397
010748	PF983
03.2022-0103.3	PF064
03.2022-0108.3	PF063
03.2022-0109.3	PF064
03.2022-0111.3	PF063
03.2022-0112.3	PF064
03.2022-2624.3	PF284
03.2022-2829.3	PF804
03.2023-0121.3	PF124
03.2023-0164.3	PF172
03.2023-0166.3	PF124
03.2023-0167.3	PF172
03.2023-0169.3	PF172
03.2023-0825.3	PF158
03.2023-0987.3	PF283
03.2023-1044.3	PF596
03.2023-1066.3	PF626
03.2023-1084.3	PF595
03.2023-1741.3	PF832
03.2023-1812.3	PF830
03.2023-2004.3	PF831
03.2023-2244.3	PF628
03.2023-2256.3	PF628
03.2023-2304.3	PF615
03.2023-2344.3	PF614
03.2023-2407.3	PF802
03.2025-0111.3	PF155
03.2025-0211.3	PF157
03.2025-1741.3	PF833
03.2025-1904.3	PF890
03.2119-0661.3	PF001
03.2119-0681.3	PF292
03.2119-0780.3	PF020
03.2119-0781.3	PF020
03.2119-1281.3	PF021
03.2119-3382.3	PF008
03.2119-3389.3	PF008
03.2119-3389.3	PF169
03.2119-3391.3	PF200
03.2120-0151.3	PF105
03.2120-0181.3	PF084
03.2120-0538.3	PF279
03.2120-1121.3	PF022
03.2120-1122.3	PF022
03.2120-1142.3	PF405
03.2120-1181.3	PF122
03.2120-1451.3	PF178
03.2120-1491.3	PF059
03.2120-1492.3	PF059
03.2120-1531.3	PF058
03.2120-1551.3	PF060
03.2120-1571.3	PF058
03.2120-1572.3	PF293
03.2120-1681.3	PF115
03.2120-1882.3	PF007
03.2120-1895.3	PF007
03.2120-1897.3	PF195
03.2120-1981.3	PF160
03.2120-2031.3	PF005
03.2120-2031.3	PF007
03.2120-2191.3	PF177
03.2120-2242.3	PF030
03.2120-2282.3	PF089
03.2120-2331.3	PF179
03.2120-2381.3	PF109
03.2120-2421.3	PF110
03.2120-2482.3	PF194
03.2120-2598.3	PF660
03.2120-2651.3	PF033
03.2120-2682.3	PF170
03.2120-2762.3	PF030
03.2120-2962.3	PF035
03.2120-3771.3	PF041
03.2120-3943.3	PF033
03.2120-3943.3	PF041
03.2120-3943.3	PF231
03.2120-4166.3	PF270
03.2120-4321.3	PF242
03.2120-4381.3	PF288
03.2120-4441.3	PF291
03.2120-4461.3	PF438
03.2120-4468.3	PF598
03.2120-4504.3	PF116
03.2120-4581.3	PF729
03.2120-4611.3	PF971
03.2120-8712.3	PF293
03.2120-9103.3	PF060
03.2120-9112.3	PF060
03.2120-9607.3	PF058
03.2120-9613.3	PF058
03.2120-9902.3	PF059
03.2120-9911.3	PF059
03.2120-9914.3	PF059
03.2122-0142.3	PF116
03.2122-0251.3	PF039
03.2122-0264.3	PF219
03.2122-0282.3	PF214
03.2122-0621.3	PF226
03.2122-0646.3	PF434
03.2122-1001.3	PF401
03.2122-1042.3	PF039
03.2122-1042.3	PF248
03.2122-1144.3	PF549
03.2122-1184.3	PF310
03.2122-1281.3	PF571
03.2122-1344.3	PF494
03.2122-1351.3	PF243
03.2122-1356.3	PF269
03.2122-1521.3	PF257
03.2122-1541.3	PF290
03.2122-1588.3	PF603
03.2122-1663.3	PF533
03.2122-1724.3	PF645
03.2122-1822.3	PF524
03.2122-1824.3	PF524
03.2122-1853.3	PF584
03.2122-1883.3	PF535
03.2122-1888.3	PF827
03.2122-1942.3	PF590
03.2122-2031.3	PF972
03.2122-2129.3	PF869
03.2122-3012.3	PF116
03.2122-3200.3	PF071
03.2122-6911.3	PF123
03.2122-9631.3	PF221
03.2123-0271.3	PF040
03.2123-0491.3	PF215
03.2123-1424.3	PF493
03.2123-1428.3	PF495
03.2123-1486.3	PF285
03.2123-1526.3	PF253
03.2123-1546.3	PF313
03.2123-1548.3	PF309
03.2123-1551.3	PF312
03.2123-1581.3	PF305
03.2123-1622.3	PF523
03.2123-1626.3	PF642
03.2123-1741.3	PF512
03.2123-1824.3	PF548
03.2123-2024.3	PF241
03.2123-2146.3	PF311
03.2123-2164.3	PF644
03.2123-2221.3	PF613
03.2123-2243.3	PF983
03.2123-2350.3	PF825
03.2123-2581.3	PF499
03.2123-2621.3	PF850
03.2123-2649.3	PF799
03.2123-2654.3	PF909
03.2123-2715.3	PF799
03.2123-2721.3	PF601
03.2123-2761.3	PF606
03.2123-2781.3	PF573
03.2123-2821.3	PF714
03.2123-2861.3	PF530
03.2123-2863.3	PF530
03.2123-2923.3	PF812
03.2123-29633	PF910
03.2123-2973.3	PF910
03.2123-3103.3	PF581
03.2123-3241.3	PF715
03.2123-3493.3	PF908
03.2123-3571.3	PF934
03.2123-4911.3	PF638
03.2123-8512.3	PF142
03.2125-0026.3	PF826
03.2125-0293.3	PF878
03.2125-0298.3	PF877
03.2125-0332.3	PF600
03.2125-0343.3	PF600
03.2125-0373.3	PF826
03.2125-0421.3	PF941
03.2125-0483.3	PF801
03.2125-0483.3	PF867
03.2125-3011.3	PF326
03.2125-7310.3	PF828
03.2125-7310.3	PF829
03.2125-7402.3	PF522
03.2125-7737.3	PF513
03.2125-7743.3	PF513
03.2125-8004.3	PF541
03.2125-8111.3	PF393
03.2125-8209.3	PF600
03.2125-9604.3	PF822
03.2125-9704.3	PF821
03.2126-3014.3	PF960
03.2217-2201.3	CF358
03.2419-1206.3	PZ062
03.2419-8000.3	PZ013
03.2419-8401.3	PZ022
03.2419-8900.3	PZ016
03.2419-9000.3	PZ020
03.2419-9510.3	PZ061
03.2419-9710.3	PZ082
03.2520-1201.3	CZ013
03.2522-4300.3	CZ036
03.2523-0803.3	CZ018
03.2523-0811.3	CZ018
03.2523-0812.3	CZ018
03.2523-1210.3	CZ016
03.2523-1310.3	CZ017
03.2525-2201.3	CZ008
03.2525-2503.3	CZ009
03.2714-0101.3	CF374
03.2715-0501.3	CF377
03.2715-0601.3	CF416
03.2717-0701.3	CF261
03.2717-0901.3	CF417
03.2719-1601.3	CF371
03.2719-1701.3	CF372
03.2719-1801.3	CF192
03.2719-2001.3	CF335
03.2719-2101.3	CF373
03.2720-1602.3	CF336
03.2723-0201.3	CF190
03.2723-0301.3	CF189
03.3119-0180.3	PF056
03.3119-9200.3	PF055
03.3119-9300.3	PF054
03.3119-9802.3	PF016
03.3120-1700.3	PF133
03.3214-0811.3	CF001

Ad. OE	FRITECH ref.	Ad. OE	FRITECH ref.	Ad. OE	FRITECH ref.	Ad. OE	FRITECH ref.	Ad. OE	FRITECH ref.
ATE		03.3222-7001.3	**CF087**	24.2100-0807.3	**PF081**	24.2120-1706.3	**PF134**	24.2122-1740.3	**PF281**
		03.3222-7101.3	**CF086**	24.2100-1004.3	**PF118**	24.2120-1707.3	**PF225**	24.2122-1741.3	**PF462**
		03.3222-7201.3	**CF120**	24.2117-1501.3	**PF085**	24.2120-1709.3	**PF171**	24.2122-1742.3	**PF385**
03.3214-0812.3	**CF001**	03.3222-7301.3	**CF010**	24.2117-1502.3	**PF128**	24.2120-1710.3	**PF006**	24.2122-1743.3	**PF269**
03.3214-1001.3	**CF044**	03.3222-7502.3	**CF257**	24.2117-1503.3	**PF127**	24.2120-1712.3	**PF164**	24.2122-1744.3	**PF251**
03.3214-1002.3	**CF044**	03.3222-7802.3	**CF199**	24.2119-0801.3	**PF074**	24.2120-1714.3	**PF193**	24.2122-1745.3	**PF582**
03.3214-1012.3	**CF105**	03.3222-8001.3	**CF603**	24.2119-0802.3	**PF047**	24.2120-1715.3	**PF093**	24.2122-1749.3	**PF323**
03.3215.2201.3	**CF262**	03.3222-8201.3	**CF337**	24.2119-0804.3	**PF047**	24.2120-1716.3	**PF132**	24.2122-1750.3	**PF263**
03.3215-0221.3	**CF267**	03.3222-8301.3	**CF587**	24.2119-0805.3	**PF052**	24.2120-1718.3	**PF077**	24.2122-1752.3	**PF239**
03.3215-1201.3	**CF483**	03.3222-8401.3	**CF533**	24.2119-0806.3	**PF050**	24.2120-1719.3	**PF006**	24.2122-1756.3	**PF800**
03.3215-1501.3	**CF264**	03.3222-8501.3	**CF611**	24.2119-0807.3	**PF045**	24.2120-1720.3	**PF490**	24.2122-1757.3	**PF658**
03.3215-1701.3	**CF339**	03.3222-8601.3	**CF612**	24.2119-0807.3	**PF073**	24.2120-1721.3	**PF975**	24.2122-1758.3	**PF800**
03.3215-2001.3	**CF365**	03.3222-8801.3	**CF031**	24.2119-0808.3	**PF044**	24.2120-1722.3	**PF213**	24.2122-1760.3	**PF525**
03.3215-2311.3	**CF080**	03.3222-9101.3	**CF392**	24.2119-0809.3	**PF047**	24.2120-1723.3	**PF211**	24.2122-1761.3	**PF517**
03.3215-2501.3	**CF003**	03.3222-9201.3	**CF391**	24.2119-0810.3	**PF003**	24.2120-1725.3	**PF131**	24.2122-1763.3	**PF532**
03.3217-0602.3	**CF340**	03.3222-9301.3	**CF389**	24.2119-0811.3	**PF044**	24.2120-1726.3	**PF267**	24.2122-1764.3	**PF625**
03.3217-1101.3	**CF350**	03.3222-9401.3	**CF390**	24.2119-0812.3	**PF044**	24.2120-1727.3	**PF235**	24.2122-1766.3	**PF507**
03.3217-1601.3	**CF484**	03.3222-9501.3	**CF016**	24.2119-0814.3	**PF047**	24.2120-1728.3	**PF266**	24.2122-1767.3	**PF506**
03.3217-1811.3	**CF194**	03.3222-9601.3	**CF017**	24.2119-0815.3	**PF004**	24.2120-1729.3	**PF174**	24.2122-1768.3	**PF542**
03.3217-2111.3	**CF000**	03.3223-0611.3	**CF300**	24.2119-0817.3	**PF013**	24.2120-1730.3	**PF381**	24.2122-1774.3	**PF578**
03.3217-2112.3	**CF000**	03.3223-0801.3	**CF342**	24.2119-0818.3	**PF072**	24.2120-1731.3	**PF380**	24.2122-6911.3	**PF096**
03.3217-2113.3	**CF000**	03.3223-0802.3	**CF342**	24.2119-0820.3	**PF051**	24.2120-1733.3	**PF185**	24.2123-1602.3	**PF222**
03.3217-2202.3	**CF007**	03.3223-0901.3	**CF343**	24.2119-0822.3	**PF044**	24.2120-1734.3	**PF463**	24.2123-1606.3	**PF148**
03.3217-2203.3	**CF358**	03.3223-0901.3	**CF019**	24.2119-0823.3	**PF015**	24.2120-1734.3	**PF973**	24.2123-1701.3	**PF191**
03.3217-2204.3	**CF007**	03.3223-0902.3	**CF343**	24.2119-0824.3	**PF017**	24.2120-1735.3	**PF322**	24.2123-1702.3	**PF176**
03.3217-2401.3	**CF349**	03.3223-1111.3	**CF172**	24.2119-0826.3	**PF018**	24.2120-1736.3	**PF329**	24.2123-1703.3	**PF147**
03.3217-2501.3	**CF612**	03.3223-1112.3	**CF172**	24.2119-0827.3	**PF053**	24.2120-1737.3	**PF273**	24.2123-1704.3	**PF036**
03.3217-2901.3	**CF428**	03.3223-1201.3	**CF058**	24.2119-0828.3	**PF053**	24.2120-1738.3	**PF624**	24.2123-1705.3	**PF037**
03.3217-3101.3	**CF359**	03.3223-1301.3	**CF057**	24.2119-0829.3	**PF019**	24.2120-1740.3	**PF623**	24.2123-1706.3	**PF191**
03.3217-3201.3	**CF356**	03.3223-1501.3	**CF118**	24.2119-0830.3	**PF014**	24.2120-1741.3	**PF508**	24.2123-1707.3	**PF218**
03.3217-3501.3	**CF008**	03.3223-1601.3	**CF117**	24.2119-0831.3	**PF015**	24.2120-1742.3	**CF234**	24.2123-1708.3	**PF217**
03.3217-3502.3	**CF008**	03.3223-1901.3	**CF114**	24.2119-0832.3	**PF073**	24.2120-1744.3	**PF544**	24.2123-1709.3	**PF234**
03.3217-3503.3	**CF153**	03.3223-2001.3	**CF115**	24.2119-0833.3	**PF034**	24.2120-1746.3	**PF545**	24.2123-1710.3	**PF271**
03.3217-3512.3	**CF009**	03.3223-2101.3	**CF366**	24.2119-0903.3	**PF081**	24.2120-1747.3	**PF546**	24.2123-1711.3	**PF304**
03.3217-3513.3	**CF155**	03.3223-2301.3	**CF019**	24.2119-0905.3	**PF087**	24.2120-1748.3	**PF978**	24.2123-1712.3	**PF245**
03.3217-3601.3	**CF601**	03.3223-2401.3	**CF058**	24.2119-0905.3	**PF107**	24.2120-1749.3	**PF816**	24.2123-1713.3	**PF265**
03.3219-0905.3	**CF107**	03.3223-2501.3	**CF057**	24.2119-0910.3	**PF080**	24.2120-1751.3	**PF586**	24.2123-1714.3	**PF272**
03.3219-2104.3	**CF370**	03.3225-5201.3	**CF529**	24.2119-0911.3	**PF139**	24.2120-1752.3	**PF944**	24.2123-1715.3	**PF268**
03.3219-2106.3	**CF156**	03.3225-5511.3	**CF228**	24.2119-0912.3	**PF083**	24.2120-1753.3	**PF979**	24.2123-1716.3	**PF091**
03.3219-3211.3	**CF263**	03.3225-5512.3	**CF229**	24.2119-0914.3	**PF008**	24.2120-1754.3	**PF617**	24.2123-1717.3	**PF223**
03.3219-4201.3	**CF233**	03.3228-1901.3	**CF381**	24.2119-0915.3	**PF079**	24.2120-1755.3	**PF443**	24.2123-1720.3	**PF209**
03.3219-4202.3	**CF233**	03.3229-1802.3	**CF203**	24.2119-1501.3	**PF143**	24.2120-1756.3	**PF880**	24.2123-1723.3	**PF262**
03.3219-4211.3	**CF154**	03.4122-0031.3	**PF599**	24.2119-1503.3	**PF082**	24.2120-1757.3	**PF643**	24.2123-1724.3	**PF043**
03.3219-4301.3	**CF075**	03.4122-0041.3	**PF589**	24.2119-1701.3	**PF118**	24.2120-1762.3	**PF710**	24.2123-1725.3	**PF192**
03.3219-4302.3	**CF075**	03.4123-0019.3	**PF480**	24.2119-1702.3	**PF200**	24.2120-1767.3	**PF856**	24.2123-1728.3	**PF819**
03.3219-4402.3	**CF590**	03.4123-0081.3	**PF641**	24.2119-1703.3	**PF079**	24.2122-0801.3	**PF031**	24.2123-1729.3	**PF244**
03.3219-4501.3	**CF352**	03.4123-0153.3	**PF604**	24.2119-1704.3	**PF139**	24.2122-0802.3	**PF091**	24.2123-1730.3	**PF383**
03.3219-4621.3	**CF338**	03.4125-0014.3	**PF639**	24.2119-1705.3	**PF083**	24.2122-0902.3	**PF096**	24.2123-1731.3	**PF276**
03.3219-4701.3	**CF054**	03.4125-0021.3	**PF640**	24.2119-1708.3	**PF227**	24.2122-0903.3	**PF095**	24.2123-1732.3	**PF308**
03.3219-4901.3	**CF383**	03.4153-0015.4	**PF531**	24.2119-1709.3	**PF943**	24.2122-0904.3	**PF032**	24.2123-1733.3	**PF464**
03.3219-5001.3	**CF382**	03.4153-0025.4	**PF693**	24.2119-1711.3	**PF550**	24.2122-0906.3	**PF146**	24.2123-1734.3	**PF280**
03.3219-5201.3	**CF191**	03.4153-0029.4	**PF528**	24.2119-1712.3	**PF661**	24.2122-0908.3	**PF168**	24.2123-1735.3	**PF398**
03.3219-5902.3	**CF355**	03.4153-5287.4	**PF528**	24.2120-0702.3	**PF038**	24.2122-1501.3	**PF175**	24.2123-1736.3	**PF394**
03.3219-6001.3	**CF352**	10.6123-0312.3	**PF286**	24.2120-0801.3	**PF009**	24.2122-1701.3	**PF153**	24.2123-1737.3	**PF397**
03.3219-6001.3	**CF394**	10.6123-0674.3	**PF609**	24.2120-0802.3	**PF023**	24.2122-1702.3	**PF151**	24.2123-1738.3	**PF429**
03.3219-6002.3	**CF352**	20.5519-2092.3	**CF583**	24.2120-0803.3	**PF024**	24.2122-1703.3	**PF197**	24.2123-1739.3	**PF557**
03.3219-6002.3	**CF394**	20.5520-1058.3	**PF190**	24.2120-0903.3	**PF078**	24.2122-1704.3	**PF173**	24.2123-1741.3	**PF275**
03.3219-6300.3	**CF152**	20.5522-1038.3	**PF232**	24.2120-0904.3	**PF077**	24.2122-1705.3	**PF202**	24.2123-1742.3	**PF602**
03.3219-6301.3	**CF152**	20.5522-1057.3	**PF233**	24.2120-0905.3	**PF121**	24.2122-1706.3	**PF154**	24.2123-1744.3	**PF458**
03.3219-6311.3	**CF074**	20.5522-1093.3	**PF229**	24.2120-0907.3	**PF093**	24.2122-1707.3	**PF212**	24.2123-1746.3	**PF551**
03.3219-6401.3	**CF758**	20.5522-1128.3	**PF647**	24.2120-0908.3	**PF076**	24.2122-1708.3	**PF196**	24.2123-1749.3	**PF390**
03.3220-0201.3	**CF388**	24.2022-0901.3	**PF156**	24.2120-0909.3	**PF110**	24.2122-1709.3	**PF189**	24.2123-1750.3	**PF247**
03.3220-0601.3	**CF523**	24.2022-1601.3	**PF156**	24.2120-0910.3	**PF159**	24.2122-1711.3	**PF096**	24.2123-1751.3	**PF575**
03.3220-1801.3	**CF085**	24.2022-1701.3	**PF075**	24.2120-0911.3	**PF171**	24.2122-1712.3	**PF095**	24.2123-1753.3	**PF650**
03.3220-1802.2	**CF076**	24.2023-1601.3	**PF220**	24.2120-0913.3	**PF161**	24.2122-1713.3	**PF032**	24.2123-1754.3	**PF636**
03.3220-1803.3	**CF085**	24.2023-1701.3	**PF611**	24.2120-1501.3	**PF002**	24.2122-1714.3	**PF207**	24.2123-1755.3	**PF820**
03.3220-2001.3	**CF011**	24.2023-1702.3	**PF633**	24.2120-1502.3	**PF057**	24.2122-1715.3	**PF210**	24.2123-1756.3	**PF036**
03.3220-2201.3	**CF348**	24.2023-1704.3	**PF634**	24.2120-1503.3	**PF076**	24.2122-1716.3	**PF042**	24.2123-1757.3	**PF884**
03.3220-2301.3	**CF027**	24.2025-1702.3	**PF654**	24.2120-1601.3	**PF167**	24.2122-1717.3	**PF287**	24.2123-1759.3	**PF806**
03.3220-3001.3	**CF018**	24.2025-1703.3	**PF653**	24.2120-1602.3	**PF164**	24.2122-1718.3	**PF260**	24.2123-1760.3	**PF585**
03.3220-3101.3	**CF200**	24.2025-1704.3	**PF608**	24.2120-1605.3	**PF162**	24.2122-1719.3	**PF203**	24.2123-1762.3	**PF519**
03.3220-3201.3	**CF041**	24.2025-1705.3	**PF593**	24.2120-1608.3	**PF164**	24.2122-1720.3	**PF307**	24.2123-1764.3	**PF537**
03.3222-2812.3	**CF193**	24.2025-1706.3	**PF503**	24.2120-1701.3	**PF114**	24.2122-1723.3	**PF188**	24.2123-1765.3	**PF638**
03.3222-4202.3	**CF713**	24.2025-1707.3	**PF594**	24.2120-1702.3	**PF174**	24.2122-1724.3	**PF282**	24.2123-1766.3	**PF911**
03.3222-4211.3	**CF367**	24.2025-1708.3	**PF502**	24.2120-1703.3	**PF131**	24.2122-1727.3	**PF252**	24.2123-1767.3	**PF659**
03.3222-4401.3	**CF489**	24.2025-1709.3	**PF627**	24.2120-1703.3	**PF201**	24.2122-1731.3	**PF039**	24.2123-1768.3	**PF660**
03.3222-5211.3	**CF193**	24.2025-1710.3	**PF629**	24.2120-1704.3	**PF195**	24.2122-1733.3	**PF274**	24.2123-1769.3	**PF482**
03.3222-5804.3	**CF199**	24.2026-1701.3	**PF976**	24.2120-1705.3	**PF295**	24.2122-1739.3	**PF199**	24.2123-1772.3	**PF803**

CROSS REFERENCES LIST

ATE		24.2419-1730.3	PZ070	24.3217-0906.3	CF014	24.3219-1107.3	CF075	24.3219-1758.3	CF716
		24.2519-0505.3	CZ102	24.3217-0907.3	CF015	24.3219-1107.3	CF721	24.3219-1759.3	CF701
		24.2519-1701.3	CZ076	24.3217-0908.3	CF239	24.3219-1110.3	CF208	24.3219-1760.3	CF853
24.2123-1776.3	PF838	24.2519-1702.3	CZ052	24.3217-1102.3	CF008	24.3219-1111.3	CF154	24.3219-1761.3	CF869
24.2123-1777.3	PF279	24.2519-1702.3	CZ097	24.3217-1104.3	CF110	24.3219-1112.3	CF102	24.3219-1762.3	CF1012
24.2125-1701.3	PF149	24.2519-1705.3	CZ080	24.3217-1105.3	CF111	24.3219-1114.3	CF338	24.3219-1763.3	CF873
24.2125-1702.3	PF205	24.2519-1706.3	CZ077	24.3217-1106.3	CF079	24.3219-1116.3	CF092	24.3219-1764.3	CF904
24.2125-1703.3	PF208	24.2519-1706.3	CZ099	24.3217-1107.3	CF023	24.3219-1117.3	CF093	24.3219-1765.3	CF292
24.2125-1704.3	PF289	24.2519-1706.3	CZ117	24.3217-1108.3	CF024	24.3219-1118.3	CF088	24.3219-1766.3	CF1003
24.2125-1705.3	PF228	24.2520-1701.3	CZ027	24.3217-1109.3	CF283	24.3219-1119.3	CF045	24.3219-1767.3	CF074
24.2125-1706.3	PF228	24.2520-1701.3	CZ095	24.3217-1111.3	CF128	24.3219-1121.3	CF206	24.3219-1768.3	CF1013
24.2125-1707.3	PF230	24.2522-0901.3	CZ036	24.3217-1112.3	CF129	24.3219-1122.3	CF207	24.3220-0101.3	CF399
24.2125-1708.3	PF230	24.2522-0905.3	CZ048	24.3217-1113.3	CF163	24.3219-1401.3	CF191	24.3220-0102.3	CF398
24.2125-1709.3	PF254	24.2522-0907.3	CZ085	24.3217-1114.3	CF006	24.3219-1601.3	CF050	24.3220-0201.3	CF197
24.2125-1711.3	PF426	24.2522-1702.3	CZ074	24.3217-1115.3	CF201	24.3219-1602.3	CF051	24.3220-0202.3	CF714
24.2125-1712.3	PF492	24.2522-1702.3	CZ096	24.3217-1115.3	CF068	24.3219-1603.3	CF077	24.3220-0403.3	CF346
24.2125-1713.3	PF277	24.2522-1703.3	CZ053	24.3217-1116.3	CF014	24.3219-1604.3	CF078	24.3220-0501.3	CF411
24.2125-1714.3	PF109	24.2522-1704.3	CZ112	24.3217-1117.3	CF015	24.3219-1605.3	CF052	24.3220-0502.3	CF606
24.2125-1720.3	PF534	24.2522-1705.3	CZ073	24.3217-1118.3	CF349	24.3219-1606.3	CF053	24.3220-0505.3	CF604
24.2125-1721.3	PF558	24.2522-1706.3	CZ074	24.3217-1119.3	CF091	24.3219-1607.3	CF045	24.3220-0901.3	CF027
24.2125-1722.3	PF574	24.2522-1706.3	CZ096	24.3217-1120.3	CF236	24.3219-1608.3	CF088	24.3220-0902.3	CF530
24.2125-1723.3	PF527	24.2523-0908.3	CZ025	24.3217-1121.3	CF408	24.3219-1609.3	CF083	24.3220-0903.3	CF041
24.2125-1725.3	PF526	24.2523-0908.3	CZ093	24.3217-1122.3	CF409	24.3219-1610.3	CF084	24.3220-0905.3	CF030
24.2125-1726.3	PF547	24.2523-1701.3	CZ026	24.3217-1601.3	CF071	24.3219-1611.3	CF140	24.3220-0906.3	CF048
24.2125-1727.3	PF580	24.2523-1701.3	CZ081	24.3217-1703.3	CF218	24.3219-1704.3	CF094	24.3220-0907.3	CF049
24.2125-1728.3	PF635	24.2523-1702.3	CZ030	24.3217-1705.3	CF131	24.3219-1705.3	CF435	24.3220-0909.3	CF127
24.2125-1729.3	PF591	24.2525-1703.3	CZ011	24.3217-1706.3	CF358	24.3219-1706.3	CF211	24.3220-0910.3	CF167
24.2125-1730.3	PF620	24.2525-1703.3	CZ023	24.3217-1707.3	CF484	24.3219-1707.3	CF112	24.3220-0910.3	CF246
24.2125-1731.3	PF621	24.2525-1705.3	CZ024	24.3217-1708.3	CF168	24.3219-1708.3	CF113	24.3220-1101.3	CF011
24.2125-1732.3	PF521	24.2525-1706.3	CZ023	24.3217-1709.3	CF318	24.3219-1709.3	CF235	24.3220-1102.3	CF195
24.2125-1733.3	PF520	24.2528-0903.3	CZ019	24.3217-1709.3	CF856	24.3219-1710.3	CF234	24.3220-1103.3	CF171
24.2125-1734.3	PF622	24.2528-1501.3	CZ019	24.3217-1710.3	CF161	24.3219-1711.3	CF213	24.3220-1104.3	CF027
24.2125-1735.3	PF907	24.2528-1601.3	CZ019	24.3217-1711.3	CF256	24.3219-1712.3	CF212	24.3220-1105.3	CF018
24.2125-1736.3	PF657	24.2717-0203.3	CF362	24.3217-1712.3	CF678	24.3219-1713.3	CF383	24.3220-1106.3	CF232
24.2125-1737.3	PF656	24.2720-0201.3	CF363	24.3217-1713.3	CF570	24.3219-1714.3	CF273	24.3220-1107.3	CF090
24.2125-1741.3	PF637	24.2723-1401.3	CF190	24.3217-1714.3	CF571	24.3219-1715.3	CF185	24.3220-1108.3	CF067
24.2126-1702.3	PF813	24.2723-1402.3	CF189	24.3217-1715.3	CF786	24.3219-1716.3	CF269	24.3220-1109.3	CF108
24.2415-1701.3	PZ064	24.2730-0901.3	CF449	24.3217-1716.3	CF825	24.3219-1717.3	CF124	24.3220-1110.3	CF200
24.2415-1701.3	PZ107	24.2730-1101.3	CF449	24.3217-1717.3	CF553	24.3219-1718.3	CF317	24.3220-1111.3	CF096
24.2415-1702.3	PZ077	24.3119-0801.3	PF010	24.3217-1718.3	CF789	24.3219-1719.3	CF253	24.3220-1112.3	CF085
24.2415-1703.3	PZ098	24.3119-0802.3	PF046	24.3217-1719.3	CF802	24.3219-1720.3	CF252	24.3220-1113.3	CF164
24.2415-1704.3	PZ078	24.3119-1501.3	PF056	24.3217-1720.3	CF814	24.3219-1721.3	CF126	24.3220-1114.3	CF165
24.2415-1704.3	PZ103	24.3119-1702.3	PF055	24.3217-1721.3	CF580	24.3219-1722.3	CF144	24.3220-1115.3	CF531
24.2415-1706.3	PZ149	24.3119-1703.3	PF054	24.3217-1722.3	CF788	24.3219-1723.3	CF464	24.3220-1116.3	CF135
24.2415-1707.3	PZ094	24.3200-0908.3	CF127	24.3217-1723.3	CF585	24.3219-1723.3	CF498	24.3220-1117.3	CF122
24.2415-1707.3	PZ108	24.3214-0901.3	CF044	24.3217-1723.3	CF586	24.3219-1724.3	CF463	24.3220-1118.3	CF059
24.2415-1708.3	PZ097	24.3214-0902.3	CF532	24.3217-1725.3	CF544	24.3219-1724.3	CF497	24.3220-1119.3	CF060
24.2415-1709.3	PZ038	24.3214-1101.3	CF044	24.3217-1726.3	CF543	24.3219-1725.3	CF573	24.3220-1120.3	CF530
24.2415-1712.3	PZ099	24.3214-1102.3	CF105	24.3217-1727.3	CF852	24.3219-1728.3	CF682	24.3220-1121.3	CF179
24.2419-0901.3	PZ022	24.3215-0401.3	CF413	24.3217-1728.3	CF832	24.3219-1729.3	CF313	24.3220-1601.3	CF043
24.2419-0903.3	PZ024	24.3215-0801.3	CF351	24.3217-1729.3	CF969	24.3219-1730.3	CF314	24.3220-1602.3	CF042
24.2419-0912.3	PZ050	24.3215-0802.3	CF593	24.3217-1731.3	CF862	24.3219-1731.3	CF311	24.3220-1603.3	CF025
24.2419-0915.3	PZ023	24.3215-0803.3	CF070	24.3217-1734.3	CF807	24.3219-1732.3	CF312	24.3220-1604.3	CF026
24.2419-0915.3	PZ113	24.3215-0901.3	CF003	24.3217-2302.3	CF350	24.3219-1733.3	CF142	24.3220-1605.3	CF025
24.2419-0917.3	PZ029	24.3215-0902.3	CF166	24.3219-0101.3	CF378	24.3219-1734.3	CF143	24.3220-1606.3	CF026
24.2419-0917.3	PZ100	24.3215-0903.3	CF725	24.3219-0102.3	CF379	24.3219-1735.3	CF552	24.3220-1607.3	CF063
24.2419-0929.3	PZ024	24.3215-1101.3	CF264	24.3219-0103.3	CF269	24.3219-1735.3	CF581	24.3220-1608.3	CF064
24.2419-1101.3	PZ014	24.3215-1102.3	CF100	24.3219-0301.3	CF401	24.3219-1736.3	CF780	24.3220-1609.3	CF048
24.2419-1101.3	PZ112	24.3215-1103.3	CF174	24.3219-0301.3	CF435	24.3219-1739.3	CF683	24.3220-1610.3	CF049
24.2419-1702.3	PZ030	24.3215-1104.3	CF003	24.3219-0403.3	CF345	24.3219-1740.3	CF684	24.3220-1611.3	CF046
24.2419-1702.3	PZ101	24.3215-1105.3	CF483	24.3219-0404.3	CF273	24.3219-1741.3	CF574	24.3220-1612.3	CF047
24.2419-1703.3	PZ023	24.3215-1106.3	CF082	24.3219-0501.3	CF355	24.3219-1742.3	CF576	24.3220-1613.3	CF025
24.2419-1703.3	PZ113	24.3215-1107.3	CF174	24.3219-0501.3	CF410	24.3219-1743.3	CF252	24.3220-1614.3	CF026
24.2419-1706.3	PZ076	24.3215-1601.3	CF082	24.3219-0503.3	CF600	24.3219-1743.3	CF253	24.3220-1615.3	CF043
24.2419-1706.3	PZ106	24.3215-1701.3	CF677	24.3219-0801.3	CF002	24.3219-1744.3	CF438	24.3220-1616.3	CF042
24.2419-1707.3	PZ085	24.3215-1702.3	CF715	24.3219-0802.3	CF590	24.3219-1745.3	CF515	24.3220-1617.3	CF061
24.2419-1707.3	PZ105	24.3215-1703.3	CF889	24.3219-0803.3	CF004	24.3219-1746.3	CF811	24.3220-1618.3	CF062
24.2419-1712.3	PZ075	24.3215-1704.3	CF291	24.3219-0903.3	CF196	24.3219-1747.3	CF710	24.3220-1619.3	CF104
24.2419-1713.3	PZ080	24.3217-0302.3	CF344	24.3219-0904.3	CF486	24.3219-1748.3	CF709	24.3220-1620.3	CF426
24.2419-1713.3	PZ102	24.3217-0304.3	CF409	24.3219-0905.3	CF107	24.3219-1749.3	CF708	24.3220-1623.3	CF072
24.2419-1715.3	PZ015	24.3217-0305.3	CF408	24.3219-0906.3	CF670	24.3219-1750.3	CF707	24.3220-1624.3	CF073
24.2419-1718.3	PZ081	24.3217-0503.3	CF361	24.3219-0907.3	CF052	24.3219-1751.3	CF074	24.3220-1625.3	CF242
24.2419-1718.3	PZ101	24.3217-0505.3	CF271	24.3219-0908.3	CF053	24.3219-1752.3	CF572	24.3220-1626.3	CF243
24.2419-1718.3	PZ087	24.3217-0801.3	CF347	24.3219-0909.3	CF121	24.3219-1753.3	CF826	24.3220-1701.3	CF123
24.2419-1721.3	PZ034	24.3217-0802.3	CF201	24.3219-1101.3	CF054	24.3219-1754.3	CF798	24.3220-1702.3	CF133
24.2419-1721.3	PZ067	24.3217-0901.3	CF356	24.3219-1102.3	CF101	24.3219-1755.3	CF780	24.3220-1703.3	CF197
24.2419-1722.3	PZ091	24.3217-0903.3	CF283	24.3219-1103.3	CF216	24.3219-1756.3	CF808	24.3220-1704.3	CF141
24.2419-1723.3	PZ092	24.3217-0905.3	CF006	24.3219-1106.3	CF109	24.3219-1757.3	CF849	24.3220-1705.3	CF242

Ad. OE	FRITECH ref.
ATE	
24.3220-1707.3	**CF145**
24.3220-1708.3	**CF146**
24.3220-1709.3	**CF147**
24.3220-1710.3	**CF148**
24.3220-1711.3	**CF159**
24.3220-1712.3	**CF523**
24.3220-1713.3	**CF043**
24.3220-1714.3	**CF042**
24.3220-1715.3	**CF160**
24.3220-1716.3	**CF149**
24.3220-1717.3	**CF162**
24.3220-1717.3	**CF520**
24.3220-1718.3	**CF629**
24.3220-1719.3	**CF320**
24.3220-1720.3	**CF151**
24.3220-1721.3	**CF839**
24.3220-1721.3	**CF804**
24.3220-1722.3	**CF327**
24.3220-1723.3	**CF790**
24.3220-1724.3	**CF801**
24.3220-1725.3	**CF578**
24.3220-1726.3	**CF577**
24.3220-1727.3	**CF777**
24.3220-1728.3	**CF827**
24.3220-1729.3	**CF242**
24.3220-1730.3	**CF243**
24.3220-1731.3	**CF791**
24.3220-1731.3	**CF792**
24.3220-1732.3	**CF808**
24.3220-1733.3	**CF820**
24.3220-1734.3	**CF819**
24.3220-1735.3	**CF860**
24.3220-1735.3	**CF861**
24.3220-1736.3	**CF860**
24.3220-1736.3	**CF861**
24.3220-1737.3	**CF981**
24.3220-1738.3	**CF866**
24.3220-1739.3	**CF1001**
24.3220-1740.3	**CF839**
24.3220-1741.3	**CF867**
24.3220-1742.3	**CF903**
24.3220-1743.3	**CF921**
24.3222-0201.3	**CF205**
24.3222-0203.3	**CF406**
24.3222-0801.3	**CF589**
24.3222-0802.3	**CF259**
24.3222-0803.3	**CF591**
24.3222-0804.3	**CF357**
24.3222-0805.3	**CF270**
24.3222-0830.3	**CF056**
24.3222-0905.3	**CF020**
24.3222-0906.3	**CF020**
24.3222-0913.3	**CF537**
24.3222-1101.3	**CF010**
24.3222-1102.3	**CF031**
24.3222-1103.3	**CF055**
24.3222-1104.3	**CF016**
24.3222-1105.3	**CF017**
24.3222-1106.3	**CF012**
24.3222-1107.3	**CF013**
24.3222-1108.3	**CF037**
24.3222-1109.3	**CF038**
24.3222-1110.3	**CF306**
24.3222-1111.3	**CF186**
24.3222-1112.3	**CF297**
24.3222-1113.3	**CF020**
24.3222-1114.3	**CF136**
24.3222-1115.3	**CF103**
24.3222-1116.3	**CF097**
24.3222-1117.3	**CF095**
24.3222-1118.3	**CF020**
24.3222-1118.3	**CF125**
24.3222-1120.3	**CF390**
24.3222-1121.3	**CF389**
24.3222-1122.3	**CF021**
24.3222-1123.3	**CF022**
24.3222-1124.3	**CF178**
24.3222-1125.3	**CF120**
24.3222-1126.3	**CF116**
24.3222-1501.3	**CF125**
24.3222-1603.3	**CF095**
24.3222-1604.3	**CF106**
24.3222-1605.3	**CF056**
24.3222-1608.3	**CF039**
24.3222-1609.3	**CF040**
24.3222-1610.3	**CF036**
24.3222-1611.3	**CF069**
24.3222-1612.3	**CF081**
24.3222-1613.3	**CF021**
24.3222-1615.3	**CF089**
24.3222-1616.3	**CF245**
24.3222-1617.3	**CF066**
24.3222-1618.3	**CF065**
24.3222-1701.3	**CF130**
24.3222-1702.3	**CF970**
24.3222-1703.3	**CF087**
24.3222-1704.3	**CF086**
24.3222-1707.3	**CF132**
24.3222-1708.3	**CF533**
24.3222-1709.3	**CF017**
24.3222-1710.3	**CF016**
24.3222-1711.3	**CF158**
24.3222-1712.3	**CF150**
24.3222-1713.3	**CF316**
24.3222-1714.3	**CF134**
24.3222-1715.3	**CF139**
24.3222-1716.3	**CF138**
24.3222-1717.3	**CF247**
24.3222-1718.3	**CF305**
24.3222-1719.3	**CF098**
24.3222-1720.3	**CF099**
24.3222-1721.3	**CF568**
24.3222-1722.3	**CF569**
24.3222-1723.3	**CF255**
24.3222-1724.3	**CF778**
24.3222-1725.3	**CF829**
24.3222-1726.3	**CF830**
24.3222-1727.3	**CF822**
24.3222-1728.3	**CF821**
24.3222-1729.3	**CF854**
24.3222-1730.3	**CF582**
24.3222-1731.3	**CF877**
24.3222-1731.3	**CF878**
24.3222-1732.3	**CF257**
24.3222-1734.3	**CF868**
24.3222-1735.3	**CF995**
24.3223-0201.3	**CF407**
24.3223-0801.3	**CF592**
24.3223-0802.3	**CF595**
24.3223-1101.3	**CF057**
24.3223-1102.3	**CF058**
24.3223-1103.3	**CF342**
24.3223-1104.3	**CF343**
24.3223-1105.3	**CF019**
24.3223-1106.3	**CF225**
24.3223-1601.3	**CF176**
24.3223-1701.3	**CF114**
24.3223-1702.3	**CF115**
24.3223-1703.3	**CF117**
24.3223-1704.3	**CF118**
24.3223-1705.3	**CF366**
24.3223-1706.3	**CF803**
24.3223-1707.3	**CF325**
24.3223-1708.3	**CF326**
24.3223-1709.3	**CF184**
24.3223-1710.3	**CF815**
24.3225-0901.3	**CF198**
24.3225-0903.3	**CF529**
24.3225-1101.3	**CF157**
24.3225-1102.3	**CF177**
24.3225-1103.3	**CF180**
24.3225-1601.3	**CF250**
24.3225-1701.3	**CF181**
24.3225-1702.3	**CF237**
24.3225-1703.3	**CF696**
24.3225-1704.3	**CF865**
24.3226-0901.3	**CF545**
24.3226-1101.3	**CF210**
24.3226-1102.3	**CF210**
24.3226-1701.3	**CF182**
24.3226-1702.3	**CF182**
24.3228-0901.3	**CF203**
24.3228-1101.3	**CF203**
24.3228-1102.3	**CF381**
24.3228-1103.3	**CF447**
24.3228-1104.3	**CF448**
24.3228-1701.3	**CF183**
24.3324-0401.3	**CF412**
24.4120-1701.3	**PF853**
24.4120-1702.3	**PF846**
24.4122-1701.3	**PF239**
24.4122-1701.3	**PF240**
24.4122-1702.3	**PF240**
24.4122-1703.3	**PF792**
24.4122-1704.3	**PF791**
24.4122-1705.3	**PF699**
24.4122-1707.3	**PF843**
24.4122-1708.3	**PF915**
24.4122-1709.3	**PF700**
24.4122-1714.3	**PF704**
24.4123-1702.3	**PF560**
24.4123-1704.3	**PF855**
24.4123-1705.3	**PF854**
24.4123-1706.3	**PF798**
24.4123-1708.3	**PF845**
24.4123-1710.3	**PF847**
24.4123-1712.3	**PF892**
24.4123-1713.3	**PF560**
24.4123-1715.3	**PF990**
24.4125-1701.3	**PF875**
24.4125-1702.3	**PF874**
24.4125-1703.3	**PF865**
24.4125-1704.3	**PF866**
24.4126-1701.3	**PF724**
24.6046-0801.3	**CT008**
24.6512-1502.3	**CT010**
24.6512-1701.3	**CT016**
24.6512-1702.3	**CT011**
24.6513-0801.3	**CT006**
24.6513-1503.3	**CT009**
24.6513-1701.3	**CT012**
24.6515-0801.3	**CT001**
27.2100-0110.3	**PF276**
27.2100-0113.3	**PF223**
27.2100-0116.3	**PF277**
27.2100-0117.3	**PF278**
27.2100-0301.3	**PF057**
27.2100-0307.3	**PF143**
27.2100-0310.3	**PF056**
27.2100-0317.3	**PF173**
27.2100-0318.3	**PF180**
27.2100-0319.3	**PF008**
27.2100-0328.3	**PF227**
27.2100-0329.3	**PF213**
27.2100-0602.3	**PF096**
27.2100-0603.3	**PF097**
27.2100-0609.3	**PF032**
27.2100-0615.3	**PF145**
27.2100-0620.3	**PF147**
27.2100-0621.3	**PF147**
27.2100-0702.3	**PF163**
27.2100-0703.3	**PF165**
27.2100-0709.3	**PF110**
27.2100-0710.3	**PF166**
27.2100-0722.3	**PF159**
27.2100-0725.3	**PF164**
27.2100-0729.3	**PF167**
27.2100-0730.3	**PF162**
27.2100-0732.3	**PF164**
27.2100-0733.3	**PF161**
27.2100-0735.3	**PF162**
27.2100-0738.3	**PF168**
27.2100-0743.3	**PF199**
27.2100-0744.3	**PF198**
27.2100-0802.3	**PF080**
27.2100-0804.3	**PF082**
27.2100-0808.3	**PF139**
27.2100-0811.3	**PF169**
27.2100-0824.3	**PF008**
27.2100-0826.3	**PF173**
27.2100-1002.3	**PF093**
27.2100-1024.3	**PF171**
27.2100-1026.3	**PF127**
27.2100-1031.3	**PF175**
27.2100-1033.3	**PF176**
27.2100-1036.3	**PF131**
27.2100-1037.3	**PF008**
27.2100-1300.3	**PF076**
27.3200-0003.3	**CF111**
27.3200-0108.3	**CF107**
27.3200-0201.3	**CF041**
27.3200-0202.3	**CF041**
27.3200-0202.3	**CF106**
27.3200-0301.3	**CF426**
27.3200-0302.3	**CF045**
27.3200-0303.3	**CF077**
27.3200-0304.3	**CF078**
27.3200-0308.3	**CF270**
27.3200-0312.3	**CF025**
27.3200-0313.3	**CF026**
27.3200-0316.3	**CF103**
27.3200-0319.3	**CF043**
27.3200-0320.3	**CF042**
27.3200-0327.3	**CF159**
27.3200-0502.3	**CF201**
27.3200-0602.3	**CF095**
27.3200-0605.3	**CF486**
27.3200-0606.3	**CF356**
27.3200-0606.3	**CF006**
27.3200-0607.3	**CF108**
27.3200-0608.3	**CF082**
27.3200-0611.3	**CF071**
27.3200-0612.3	**CF109**
27.3200-0613.3	**CF186**
27.3200-0702.3	**CF044**
27.3200-0703.3	**CF152**
27.3200-0706.3	**CF153**
27.3200-0801.3	**CF530**
27.3200-0802.3	**CF104**
27.3200-0803.3	**CF089**
27.3200-0804.3	**CF447**
27.3200-0805.3	**CF448**
27.3200-0807.3	**CF036**
27.3200-0810.3	**CF052**
27.3200-0811.3	**CF053**
27.3200-0812.3	**CF048**
27.3200-0813.3	**CF049**
27.3200-0814.3	**CF050**
27.3200-0814.3	**CF089**
27.3200-0815.3	**CF051**
27.3200-0816.3	**CF088**
27.3200-0817.3	**CF030**
27.3200-0818.3	**CF270**
27.3200-0824.3	**CF012**
27.3200-0825.3	**CF013**
27.3200-0827.3	**CF015**
27.3200-0830.3	**CF056**
27.3200-0833.3	**CF046**
27.3200-0834.3	**CF047**
27.3200-0835.3	**CF048**
27.3200-0836.3	**CF049**
27.3200-0839.3	**CF063**
27.3200-0840.3	**CF064**
27.3200-0842.3	**CF083**
27.3200-0843.3	**CF084**
27.3200-0844.3	**CF077**
27.3200-0845.3	**CF078**
27.3200-0846.3	**CF102**
27.3200-0852.3	**CF182**
27.3200-0853.3	**CF181**
27.3200-0854.3	**CF183**
27.3200-0855.3	**CF160**
27.3200-1007.3	**CF037**
27.3200-1008.3	**CF038**
27.3200-1014.3	**CF125**
27.3200-1016.3	**CF225**
27.3200-1017.3	**CF020**
27.3200-1021.3	**CF157**
27.3200-1027.3	**CF021**
27.3200-1028.3	**CF022**
27.3200-1029.3	**CF069**
27.3200-1030.3	**CF081**
27.3200-1035.3	**CF025**
27.3200-1036.3	**CF026**
27.3200-1044.3	**CF042**
27.3200-1045.3	**CF043**
27.3200-1046.3	**CF025**
27.3200-1047.3	**CF026**
27.3200-1048.3	**CF531**
27.3200-1049.3	**CF032**
27.3200-1050.3	**CF033**
27.3200-1051.3	**CF025**
27.3200-1052.3	**CF026**
27.3200-1054.3	**CF059**
27.3200-1055.3	**CF060**
27.3200-1056.3	**CF039**
27.3200-1057.3	**CF040**
27.3200-1058.3	**CF043**
27.3200-1059.3	**CF042**
27.3200-1060.3	**CF072**
27.3200-1061.3	**CF073**
27.3200-1062.3	**CF061**
27.3200-1063.3	**CF062**
27.3200-1064.3	**CF043**
27.3200-1065.3	**CF042**
27.3200-1066.3	**CF065**
27.3200-1067.3	**CF066**
27.3200-1073.3	**CF092**
27.3200-1074.3	**CF093**
27.3200-1075.3	**CF061**
27.3200-1076.3	**CF062**
27.3200-1080.3	**CF131**
27.3200-9903.3	**CF123**
27.3217-0902.3	**CF350**

Ad. OE	FRITECH ref.
BENDIX	
111260B	**PF133**
111361B	**PF054**
111438B	**PF056**
111455B	**PF055**
121136B	**PZ024**
122000B	**PZ004**
122012B	**PZ016**
122013B	**PZ025**
122015B	**PZ013**
122016B	**PZ015**
122021B	**PZ020**
122022B	**PZ022**
122023B	**PF016**
122024B	**PZ010**
122024B	**PZ014**
122035B	**PZ050**
122036B	**PZ023**
122036B	**PZ113**
122054B	**PZ081**
122054B	**PZ101**
122063B	**PZ060**
122072B	**PZ037**
122073B	**PZ033**
122074B	**PZ034**
122078B	**PZ081**
122078B	**PZ030**
122078B	**PZ101**
122079B	**PZ061**

CROSS REFERENCES LIST

Ad. OE	FRITECH ref.	Ad. OE	FRITECH ref.	Ad. OE	FRITECH ref.	Ad. OE	FRITECH ref.	Ad. OE	FRITECH ref.
BENDIX		131643B	**PF176**	132135B	**PF193**	132450B	**PF265**	132967B	**PF385**
		131647B	**PF089**	132143B	**PF031**	132453B	**PF260**	132968B	**PF429**
		131664B	**PF169**	132167B	**PF010**	132455B	**PF196**	132969B	**PF464**
122079B	**PZ150**	131665B	**PF002**	132168B	**PF046**	132457B	**PF248**	132974B	**PF286**
122081B	**PZ082**	131678B	**PF154**	132169B	**PF011**	132462B	**PF308**	132975B	**PF490**
122085B	**PZ062**	131684B	**PF127**	132172B	**PF012**	132473B	**PF104**	132977B	**PF269**
122094B	**PZ149**	131690B	**PF095**	132184B	**PF045**	132483B	**PF211**	132979B	**PF209**
122095B	**PZ076**	131690B	**PF146**	132184B	**PF073**	132493B	**PF426**	132980B	**PF523**
122095B	**PZ106**	131703B	**PF153**	132185B	**PF049**	132503B	**PF975**	132981B	**PF253**
122097B	**PZ085**	131704B	**PF036**	132188B	**PF068**	132505B	**PF492**	132982B	**PF309**
122097B	**PZ105**	131705B	**PF037**	132191B	**PF048**	132508B	**PF215**	132983B	**PF393**
122100B	**PZ064**	131708B	**PF060**	132200B	**PF014**	132514B	**PF227**	132984B	**PF305**
122100B	**PZ107**	131708B	**PF293**	132216B	**PF009**	132515B	**PF266**	132985B	**PF394**
122101B	**PZ080**	131708B	**PF178**	132217B	**PF018**	132517B	**PF271**	132986B	**PF398**
122101B	**PZ102**	131709B	**PF058**	132218B	**PF050**	132518B	**PF254**	132989B	**PF144**
122103B	**PZ075**	131709B	**PF059**	132220B	**PF017**	132519B	**PF213**	132990B	**PF186**
122104B	**PZ078**	131709B	**PF060**	132221B	**PF018**	132521B	**PF267**	132991B	**PF235**
122104B	**PZ103**	131768B	**PF170**	132222B	**PF018**	132522B	**PF268**	132992B	**PF236**
122106B	**PZ094**	131768B	**PF221**	132223B	**PF053**	132523B	**PF234**	132994B	**PF610**
122106B	**PZ108**	131773B	**PF128**	132224B	**PF053**	132526B	**PF192**	132995B	**PF239**
122109B	**PZ092**	131781B	**PF114**	132225B	**PF052**	132527B	**PF597**	132995B	**PF240**
122110B	**PZ029**	131821B	**PF175**	132227B	**PF053**	132530B	**PF390**	132996B	**PF611**
122110B	**PZ100**	131822B	**PF008**	132229B	**PF072**	132531B	**PF602**	132998B	**PF593**
122111B	**PZ087**	131823B	**PF005**	132230B	**PF047**	132535B	**PF220**	132999B	**PF283**
122112B	**PZ080**	131823B	**PF007**	132232B	**PF047**	132536B	**PF251**	133002B	**PF654**
122112B	**PZ102**	131849B	**PF147**	132235B	**PF074**	132537B	**PF252**	133003B	**PF830**
122114B	**PZ116**	131854B	**PF148**	132236B	**PF141**	132538B	**PF502**	133004B	**PF653**
122116B	**PZ130**	131858B	**PF039**	132237B	**PF019**	132539B	**PF503**	133006B	**PF558**
122118B	**PZ117**	131878B	**PF189**	132238B	**PF051**	132541B	**PF282**	133007B	**PF574**
122121B	**PZ079**	131882B	**PF174**	132239B	**PF294**	132542B	**PF276**	133014B	**PF239**
122121B	**PZ104**	131892B	**PF149**	132240B	**PF006**	132545B	**PF204**	133016B	**PF575**
122125B	**PZ098**	131912B	**PF212**	132242B	**PF015**	132611B	**PF177**	133017B	**PF448**
122126B	**PZ077**	131915B	**PF191**	132244B	**PF474**	132701B	**PF024**	133018B	**PF247**
122128B	**PZ115**	131920B	**PF173**	132248B	**PF044**	132703B	**PF073**	133019B	**PF246**
122129B	**PZ118**	131955B	**PF134**	132249B	**PF003**	132709B	**PF172**	133020B	**PF232**
122131B	**PZ091**	131968B	**PF033**	132251B	**PF004**	132712B	**PF434**	133021B	**PF263**
122133B	**PZ097**	131968B	**PF041**	132252B	**PF004**	132722B	**PF062**	133022B	**PF264**
122137B	**PZ038**	131983B	**PF043**	132253B	**PF013**	132728B	**PF111**	133025B	**PF280**
122138B	**PZ039**	131987B	**PF194**	132254B	**PF132**	132743B	**PF130**	133026B	**PF281**
122140B	**PZ096**	131994B	**PF191**	132255B	**PF185**	132746B	**PF224**	133027B	**PF257**
122140B	**PZ110**	131997B	**PF218**	132256B	**PF042**	132749B	**PF262**	133028B	**PF241**
122141B	**PZ119**	131998B	**PF200**	132257B	**PF034**	132754B	**PF289**	133029B	**PF608**
124247B	**PZ065**	131999B	**PF195**	132258B	**PF006**	132761B	**PF226**	133030B	**PF633**
124250B	**PZ066**	132026B	**PF107**	132259B	**PF042**	132765B	**PF084**	133032B	**PF481**
131383B	**PF001**	132038B	**PF053**	132261B	**PF116**	132772B	**PF124**	133035B	**PF553**
131386B	**PF076**	132038B	**PF018**	132273B	**PF142**	132776B	**PF157**	133036B	**PF582**
131387B	**PF093**	132044B	**PF145**	132277B	**PF064**	132795B	**PF087**	133037B	**PF819**
131422B	**PF078**	132063B	**PF116**	132278B	**PF158**	132821B	**PF075**	133038B	**PF526**
131424B	**PF020**	132071B	**PF117**	132281B	**PF660**	132822B	**PF086**	133039B	**PF547**
131459B	**PF077**	132077B	**PF030**	132287B	**PF123**	132823B	**PF023**	133040B	**PF284**
131463B	**PF079**	132078B	**PF203**	132311B	**PF177**	132827B	**PF327**	133041B	**PF508**
131473B	**PF040**	132082B	**PF031**	132344B	**PF155**	132830B	**PF326**	133042B	**PF507**
131474B	**PF171**	132084B	**PF186**	132346B	**PF121**	132858B	**PF179**	133043B	**PF506**
131476B	**PF122**	132086B	**PF091**	132351B	**PF105**	132866B	**PF222**	133044B	**PF442**
131477B	**PF021**	132087B	**PF042**	132377B	**PF405**	132867B	**PF215**	133045B	**PF448**
131478B	**PF143**	132089B	**PF091**	132382B	**PF124**	132871B	**PF025**	133046B	**PF444**
131491B	**PF096**	132091B	**PF208**	132383B	**PF063**	132873B	**PF138**	133047B	**PF482**
131497B	**PF097**	132093B	**PF205**	132385B	**PF219**	132880B	**PF031**	133048B	**PF500**
131510B	**PF150**	132094B	**PF210**	132387B	**PF035**	132882B	**PF230**	133049B	**PF190**
131511B	**PF151**	132096B	**PF207**	132397B	**PF214**	132885B	**PF209**	133050B	**PF233**
131512B	**PF152**	132098B	**PF160**	132401B	**PF107**	132887B	**PF206**	133051B	**PF528**
131518B	**PF085**	132101B	**PF109**	132402B	**PF108**	132889B	**PF042**	133052B	**PF239**
131519B	**PF057**	132102B	**PF110**	132406B	**PF475**	132891B	**PF230**	133053B	**PF524**
131519B	**PF270**	132104B	**PF159**	132407B	**PF225**	132892B	**PF228**	133054B	**PF487**
131521B	**PF118**	132105B	**PF167**	132408B	**PF112**	132895B	**PF272**	133055B	**PF381**
131523B	**PF080**	132106B	**PF166**	132416B	**PF131**	132896B	**PF008**	133056B	**PF380**
131525B	**PF081**	132109B	**PF165**	132416B	**PF201**	132897B	**PF007**	133058B	**PF242**
131526B	**PF022**	132110B	**PF163**	132417B	**PF180**	132900B	**PF135**	133059B	**PF243**
131527B	**PF292**	132112B	**PF164**	132417B	**PF202**	132950B	**PF223**	133060B	**PF285**
131541B	**PF082**	132120B	**PF164**	132418B	**PF217**	132952B	**PF277**	133061B	**PF311**
131542B	**PF139**	132122B	**PF162**	132426B	**PF287**	132953B	**PF383**	133063B	**PF329**
131580B	**PF083**	132123B	**PF161**	132429B	**PF231**	132954B	**PF436**	133064B	**PF463**
131595B	**PF295**	132124B	**PF168**	132432B	**PF304**	132955B	**PF437**	133064B	**PF973**
131600B	**PF094**	132125B	**PF038**	132433B	**PF245**	132956B	**PF437**	133065B	**PF493**
131607B	**PF115**	132128B	**PF198**	132434B	**PF188**	132957B	**PF436**	133066B	**PF552**
131626B	**PF156**	132132B	**PF199**	132439B	**PF503**	132958B	**PF273**	133067B	**PF799**
131629B	**PF098**	132133B	**PF249**	132442B	**PF244**	132961B	**PF274**	133068B	**PF798**
131630B	**PF032**	132134B	**PF250**	132448B	**PF197**	132966B	**PF462**	133070B	**PF974**

Ad. OE	FRITECH ref.	Ad. OE	FRITECH ref.	Ad. OE	FRITECH ref.	Ad. OE	FRITECH ref.	Ad. OE	FRITECH ref.
BENDIX		211694B	**CF349**	212000B	**CF246**	212142B	**CF590**	212304B	**CF016**
		211700B	**CF027**	212001B	**CF167**	212143B	**CF592**	212305B	**CF017**
		211707B	**CF601**	212002B	**CF122**	212144B	**CF593**	212306B	**CF147**
133071B	**PF835**	211740B	**CF389**	212003B	**CF395**	212145B	**CF594**	212307B	**CF148**
133079B	**PF544**	211741B	**CF390**	212004B	**CF396**	212146B	**CF487**	212308B	**CF131**
133081B	**PF546**	211742B	**CF339**	212006B	**CF404**	212151B	**CF170**	212309B	**CF132**
133082B	**PF549**	211743B	**CF264**	212007B	**CF095**	212153B	**CF188**	212310B	**CF239**
133085B	**PF601**	211744B	**CF352**	212008B	**CF080**	212155B	**CF217**	212318B	**CF181**
133086B	**PF542**	211744B	**CF394**	212009B	**CF041**	212157B	**CF107**	212319B	**CF182**
133087B	**PF650**	211746B	**CF007**	212010B	**CF156**	212158B	**CF523**	212320B	**CF183**
133089B	**PF571**	211746B	**CF786**	212011B	**CF091**	212162B	**CF106**	212321B	**CF629**
133092B	**PF557**	211747B	**CF358**	212012B	**CF102**	212166B	**CF228**	212322B	**CF159**
133093B	**PF516**	211748B	**CF075**	212019B	**CF449**	212167B	**CF229**	212323B	**CF532**
133094B	**PF594**	211748B	**CF721**	212024B	**CF130**	212168B	**CF545**	212324B	**CF725**
133095B	**PF551**	211749B	**CF085**	212025B	**CF133**	212169B	**CF105**	212326B	**CF121**
133096B	**PF543**	211750B	**CF076**	212030B	**CF044**	212170B	**CF009**	212327B	**CF134**
133097B	**PF614**	211751B	**CF031**	212031B	**CF278**	212171B	**CF074**	212328B	**CF138**
133098B	**PF804**	211752B	**CF018**	212032B	**CF429**	212172B	**CF154**	212329B	**CF139**
133100B	**PF499**	211753B	**CF019**	212033B	**CF430**	212173B	**CF155**	212330B	**CF116**
133101B	**PF534**	211754B	**CF392**	212034B	**CF351**	212175B	**CF670**	212331B	**CF184**
133102B	**PF505**	211755B	**CF391**	212035B	**CF002**	212181B	**CF533**	212332B	**CF247**
133103B	**PF323**	211756B	**CF125**	212036B	**CF357**	212184B	**CF023**	212333B	**CF158**
133104B	**PF322**	211762B	**CF030**	212037B	**CF201**	212185B	**CF024**	212334B	**CF252**
133108B	**PF625**	211765B	**CF036**	212038B	**CF270**	212186B	**CF157**	212335B	**CF253**
133109B	**PF458**	211767B	**CF039**	212039B	**CF259**	212187B	**CF153**	212336B	**CF126**
133110B	**PF443**	211768B	**CF040**	212040B	**CF004**	212188B	**CF088**	212337B	**CF135**
133111B	**PF520**	211771B	**CF056**	212041B	**CF595**	212189B	**CF089**	212338B	**CF245**
133112B	**PF540**	211772B	**CF055**	212042B	**CF070**	212191B	**CF483**	212339B	**CF325**
133113B	**PF592**	211773B	**CF012**	212043B	**CF347**	212192B	**CF250**	212340B	**CF326**
133117B	**PF397**	211774B	**CF013**	212044B	**CF079**	212193B	**CF021**	212343B	**CF180**
133118B	**PF560**	211775B	**CF612**	212045B	**CF100**	212194B	**CF022**	212344B	**CF144**
133119B	**PF479**	211776B	**CF611**	212046B	**CF101**	212200B	**CF283**	212357B	**CF201**
133121B	**PF587**	211778B	**CF058**	212055B	**CF277**	212201B	**CF127**	212378B	**CF127**
133122B	**PF586**	211779B	**CF057**	212059B	**CF190**	212202B	**CF152**	212379B	**CF141**
133126B	**PF288**	211783B	**CF356**	212060B	**CF189**	212206B	**CF199**	212381B	**CF570**
133127B	**PF438**	211784B	**CF003**	212061B	**CF262**	212206B	**CF257**	212382B	**CF571**
133128B	**PF313**	211789B	**CF200**	212062B	**CF191**	212208B	**CF085**	212384B	**CF682**
133129B	**PF512**	211792B	**CF381**	212063B	**CF001**	212209B	**CF075**	212385B	**CF537**
133130B	**PF290**	211793B	**CF203**	212064B	**CF000**	212210B	**CF123**	212386B	**CF185**
133131B	**PF312**	211796B	**CF010**	212065B	**CF172**	212211B	**CF164**	212387B	**CF209**
133132B	**PF291**	211797B	**CF530**	212067B	**CF263**	212212B	**CF374**	212388B	**CF163**
133133B	**PF039**	211815B	**CF486**	212068B	**CF194**	212212B	**CF165**	212389B	**CF162**
133136B	**PF494**	211816B	**CF233**	212069B	**CF193**	212213B	**CF210**	212390B	**CF161**
133137B	**PF548**	211820B	**CF365**	212070B	**CF300**	212214B	**CF306**	212391B	**CF317**
133141B	**PF661**	211821B	**CF343**	212071B	**CF341**	212215B	**CF196**	212392B	**CF318**
133145B	**PF310**	211822B	**CF342**	212072B	**CF348**	212216B	**CF168**	212392B	**CF856**
133147B	**PF826**	211828B	**CF111**	212073B	**CF261**	212217B	**CF089**	212393B	**CF151**
133148B	**PF249**	211829B	**CF110**	212074B	**CF192**	212218B	**CF440**	212394B	**CF255**
133149B	**PF250**	211831B	**CF006**	212077B	**CF335**	212219B	**CF441**	212395B	**CF568**
133150B	**PF870**	211832B	**CF082**	212078B	**CF367**	212220B	**CF235**	212396B	**CF569**
133155B	**PF024**	211839B	**CF103**	212079B	**CF098**	212221B	**CF234**	212397B	**CF150**
211061B	**CF683**	211842B	**CF008**	212080B	**CF099**	212222B	**CF136**	212398B	**CF149**
211076B	**CF340**	211844B	**CF426**	212087B	**CF427**	212223B	**CF096**	212399B	**CF316**
211322B	**CF382**	211848B	**CF104**	212088B	**CF423**	212224B	**CF097**	212401B	**CF581**
211454B	**CF448**	211850B	**CF108**	212089B	**CF422**	212228B	**CF176**	212402B	**CF320**
211455B	**CF447**	211857B	**CF112**	212090B	**CF424**	212229B	**CF175**	212403B	**CF978**
211504B	**CF117**	211858B	**CF113**	212091B	**CF526**	212230B	**CF219**	212404B	**CF977**
211505B	**CF118**	211877B	**CF045**	212092B	**CF527**	212231B	**CF451**	212406B	**CF583**
211520B	**CF529**	211897B	**CF092**	212093B	**CF420**	212232B	**CF285**	212410B	**CF520**
211546B	**CF095**	211898B	**CF093**	212094B	**CF420**	212233B	**CF221**	212411B	**CF182**
211583B	**CF037**	211899B	**CF059**	212098B	**CF369**	212234B	**CF450**	212412B	**CF327**
211584B	**CF038**	211900B	**CF060**	212099B	**CF375**	212235B	**CF284**	212413B	**CF552**
211591B	**CF355**	211903B	**CF014**	212100B	**CF376**	212236B	**CF220**	212414B	**CF677**
211598B	**CF114**	211904B	**CF015**	212102B	**CF202**	212244B	**CF177**	212415B	**CF256**
211599B	**CF115**	211905B	**CF128**	212103B	**CF208**	212247B	**CF094**	212416B	**CF778**
211627B	**CF086**	211906B	**CF129**	212104B	**CF275**	212254B	**CF305**	212417B	**CF067**
211628B	**CF087**	211907B	**CF069**	212105B	**CF274**	212257B	**CF068**	212419B	**CF777**
211629B	**CF120**	211908B	**CF081**	212106B	**CF524**	212263B	**CF354**	212420B	**CF808**
211630B	**CF011**	211927B	**CF297**	212107B	**CF525**	212263B	**CF216**	212421B	**CF802**
211639B	**CF054**	211961B	**CF067**	212113B	**CF443**	212264B	**CF328**	212422B	**CF801**
211664B	**CF603**	211962B	**CF135**	212118B	**CF377**	212265B	**CF329**	212423B	**CF790**
211666B	**CF338**	211967B	**CF531**	212124B	**CF607**	212288B	**CF330**	212425B	**CF839**
211668B	**CF612**	211980B	**CF071**	212129B	**CF397**	212289B	**CF169**	212425B	**CF804**
211669B	**CF337**	211981B	**CF124**	212134B	**CF268**	212294B	**CF122**	212426B	**CF811**
211670B	**CF587**	211983B	**CF109**	212138B	**CF195**	212297B	**CF004**	212427B	**CF244**
211685B	**CF020**	211986B	**CF125**	212139B	**CF171**	212298B	**CF090**	212428B	**CF827**
211691B	**CF350**	211988B	**CF225**	212140B	**CF591**	212299B	**CF140**	212429B	**CF166**
211692B	**CF383**	211990B	**CF186**	212141B	**CF589**	212303B	**CF160**	212430B	**CF779**

CROSS REFERENCES LIST

Ad. OE	FRITECH ref.	Ad. OE	FRITECH ref.	Ad. OE	FRITECH ref.	Ad. OE	FRITECH ref.	Ad. OE	FRITECH ref.
BENDIX		214277B	**CF307**	214559B	**CF712**	251031B	**CF066**	**BOSCH**	
		214278B	**CF241**	214560B	**CF712**	251032B	**CF061**		
		214282B	**CF407**	214561B	**CF311**	251033B	**CF062**		
212431B	**CF829**	214283B	**CF408**	214562B	**CF312**	251034B	**CF072**	0 204 011 217	**CF438**
212433B	**CF319**	214284B	**CF409**	214563B	**CF810**	251035B	**CF073**	0 204 011 241	**CF803**
214064B	**CF452**	214288B	**CF406**	214564B	**CF809**	251036B	**CF061**	0 204 011 249	**CF256**
214066B	**CF379**	214289B	**CF269**	214565B	**CF1006**	251036B	**CF072**	0 204 011 407	**CF808**
214067B	**CF299**	214421B	**CF509**	214566B	**CF1005**	251037B	**CF062**	0 204 011 463	**CF801**
214068B	**CF298**	214422B	**CF512**	214567B	**CF789**	251037B	**CF073**	0 204 011 474	**CF067**
214069B	**CF541**	214423B	**CF513**	214568B	**CF826**	251038B	**CF043**	0 204 011 640	**CF870**
214070B	**CF542**	214424B	**CF303**	214569B	**CF803**	251039B	**CF042**	0 204 021 200	**PF126**
214071B	**CF519**	214425B	**CF468**	214570B	**CF814**	251040B	**CF043**	0 204 021 760	**PF835**
214075B	**CF604**	214426B	**CF467**	214571B	**CF696**	251041B	**CF042**	0 204 021 808	**PF560**
214076B	**CF174**	214429B	**CF291**	214572B	**CF236**	251042B	**CF043**	0 204 021 934	**PF511**
214077B	**CF462**	214430B	**CF543**	214572B	**CF969**	251043B	**CF042**	0 204 023 966	**PF186**
214078B	**CF503**	214431B	**CF544**	214573B	**CF580**	251046B	**CF063**	0 204 024 070	**PF558**
214079B	**CF237**	214432B	**CF214**	214574B	**CF788**	251047B	**CF064**	0 204 024 071	**PF574**
214080B	**CF501**	214433B	**CF215**	214575B	**CF646**	251048B	**CF042**	0 204 024 097	**PF835**
214081B	**CF502**	214434B	**CF212**	214576B	**CF647**	251049B	**CF043**	0 204 024 225	**PF330**
214082B	**CF502**	214435B	**CF213**	214579B	**CF578**	251052B	**CF242**	0 204 024 759	**PF974**
214085B	**CF439**	214436B	**CF807**	214580B	**CF577**	251053B	**CF243**	0 204 024 917	**PF630**
214086B	**CF615**	214439B	**CF458**	214582B	**CF716**	251054B	**CF145**	0 204 051 326	**PF886**
214087B	**CF488**	214454B	**CF459**	214583B	**CF464**	251055B	**CF146**	0 204 051 514	**PF982**
214088B	**CF204**	214455B	**CF226**	214584B	**CF716**	251056B	**CF043**	0 204 051 556	**PF895**
214089B	**CF598**	214456B	**CF460**	214586B	**CF833**	251057B	**CF042**	0 204 051 758	**PF901**
214091B	**CF361**	214459B	**CF292**	214587B	**CF775**	251058B	**CF142**	0 204 054 366	**PF886**
214092B	**CF207**	214466B	**CF572**	214588B	**CF985**	251059B	**CF143**	0 204 054 380	**PF849**
214097B	**CF197**	214467B	**CF563**	214589B	**CF816**	251060B	**CF684**	0 204 054 419	**PF848**
214098B	**CF378**	214476B	**CF497**	214590B	**CF825**	251061B	**CF683**	0 204 054 420	**PF849**
214103B	**CF273**	214477B	**CF498**	214591B	**CF573**	311347B	**CT010**	0 204 054 486	**PF982**
214104B	**CF412**	214478B	**CF463**	214592B	**CF258**	311474B	**CT009**	0 204 054 487	**PF897**
214107B	**CF236**	214479B	**CF464**	214597B	**CF798**	312006B	**CT003**	0 204 054 630	**PF924**
214109B	**CF207**	214480B	**CF464**	214598B	**CF252**	312007B	**CT007**	0 204 055 022	**PF630**
214110B	**CF206**	214481B	**CF463**	214599B	**CF463**	312008B	**CT002**	0 204 055 175	**PF835**
214115B	**CF206**	214483B	**CF499**	214599B	**CF497**	312011B	**CT006**	0 204 055 176	**PF835**
214124B	**CF290**	214485B	**CF403**	214600B	**CF463**	312013B	**CT001**	0 204 055 191	**PF974**
214125B	**CF473**	214490B	**CF205**	214600B	**CF464**	312015B	**CT012**	0 204 116 037	**CF448**
214126B	**CF516**	214491B	**CF174**	214600B	**CF498**	312016B	**CT004**	0 204 116 038	**CF447**
214127B	**CF271**	214493B	**CF174**	214601B	**CF126**	312019B	**CT011**	0 204 116 053	**CF529**
214128B	**CF211**	214495B	**CF204**	214602B	**CF822**	312201B	**CT016**	0 204 116 060	**CF037**
214129B	**CF218**	214496B	**CF174**	214605B	**CF889**	312239B	**CT008**	0 204 116 061	**CF038**
214133B	**CF431**	214496B	**CF514**	214606B	**CF174**	321010B	**CT005**	0 204 116 062	**CF355**
214137B	**CF345**	214497B	**CF184**	217002B	**CF528**	511503B	**CZ019**	0 204 116 064	**CF114**
214138B	**CF346**	214498B	**CF521**	221504B	**CF179**	512002B	**CZ008**	0 204 116 071	**CF086**
214143B	**CF500**	214499B	**CF304**	221505B	**CF178**	512003B	**CZ009**	0 204 116 072	**CF087**
214144B	**CF237**	214501B	**CF494**	221506B	**CF180**	512012B	**CZ035**	0 204 116 073	**CF120**
214145B	**CF600**	214503B	**CF757**	251000B	**CF048**	512015B	**CZ005**	0 204 116 074	**CF011**
214152B	**CF363**	214503B	**CF546**	251001B	**CF049**	512016B	**CZ102**	0 204 116 075	**CF054**
214154B	**CF362**	214504B	**CF546**	251002B	**CF052**	512020B	**CZ013**	0 204 116 076	**CF338**
214155B	**CF287**	214529B	**CF515**	251003B	**CF053**	512023B	**CZ018**	0 204 116 080	**CF020**
214159B	**CF400**	214532B	**CF248**	251004B	**CF077**	512024B	**CZ016**	0 204 116 083	**CF350**
214160B	**CF344**	214533B	**CF249**	251005B	**CF078**	512041B	**CZ051**	0 204 116 084	**CF383**
214161B	**CF398**	214534B	**CF840**	251006B	**CF050**	512041B	**CZ085**	0 204 116 085	**CF349**
214162B	**CF399**	214535B	**CF841**	251007B	**CF051**	512042B	**CZ036**	0 204 116 087	**CF027**
214173B	**CF299**	214536B	**CF648**	251008B	**CF046**	512043B	**CZ027**	0 204 116 090	**CF601**
214174B	**CF298**	214537B	**CF636**	251009B	**CF047**	512043B	**CZ095**	0 204 116 091	**CF389**
214175B	**CF309**	214538B	**CF787**	251010B	**CF025**	512045B	**CZ048**	0 204 116 092	**CF390**
214176B	**CF308**	214539B	**CF579**	251011B	**CF026**	512051B	**CZ017**	0 204 116 093	**CF031**
214191B	**CF458**	214540B	**CF678**	251012B	**CF032**	512061B	**CZ023**	0 204 116 094	**CF018**
214193B	**CF363**	214541B	**CF585**	251013B	**CF033**	512064B	**CZ024**	0 204 116 095	**CF019**
214196B	**CF505**	214542B	**CF586**	251014B	**CF025**	512065B	**CZ008**	0 204 116 096	**CF392**
214197B	**CF606**	214543B	**CF780**	251015B	**CF026**	512066B	**CZ011**	0 204 116 097	**CF391**
214198B	**CF411**	214544B	**CF553**	251015B	**CF061**	512067B	**CZ030**	0 204 116 098	**CF125**
214199B	**CF714**	214545B	**CF715**	251016B	**CF048**	512072B	**CZ025**	0 204 116 101	**CF058**
214200B	**CF518**	214545B	**CF694**	251017B	**CF049**	512072B	**CZ093**	0 204 116 102	**CF057**
214201B	**CF197**	214546B	**CF438**	251018B	**CF025**	512073B	**CZ023**	0 204 116 105	**CF003**
214202B	**CF403**	214547B	**CF708**	251019B	**CF026**	512092B	**CZ052**	0 204 116 106	**CF200**
214211B	**CF269**	214548B	**CF707**	251020B	**CF242**	512092B	**CZ097**	0 204 116 107	**CF381**
214212B	**CF412**	214549B	**CF679**	251021B	**CF243**	512095B	**CZ112**	0 204 116 108	**CF203**
214216B	**CF453**	214550B	**CF074**	251022B	**CF083**	512096B	**CZ081**	0 204 116 109	**CF010**
214220B	**CF540**	214551B	**CF824**	251023B	**CF084**	512097B	**CZ076**	0 204 116 110	**CF530**
214221B	**CF496**	214552B	**CF823**	251024B	**CF242**	512099B	**CZ085**	0 204 116 113	**CF110**
214238B	**CF401**	214553B	**CF556**	251025B	**CF243**	512100B	**CZ053**	0 204 116 114	**CF111**
214241B	**CF435**	214554B	**CF676**	251026B	**CF077**	512102B	**CZ077**	0 204 116 122	**CF103**
214248B	**CF517**	214555B	**CF820**	251027B	**CF078**	512102B	**CZ099**	0 204 116 123	**CF008**
214254B	**CF465**	214556B	**CF819**	251028B	**CF025**	512103B	**CZ103**	0 204 116 124	**CF113**
214257B	**CF301**	214557B	**CF710**	251029B	**CF026**	512104B	**CZ104**	0 204 116 125	**CF112**
214258B	**CF634**	214558B	**CF709**	251030B	**CF065**	512112B	**CZ098**	0 204 116 126	**CF016**

Ad. OE	FRITECH ref.	Ad. OE	FRITECH ref.	Ad. OE	FRITECH ref.	Ad. OE	FRITECH ref.	Ad. OE	FRITECH ref.
BOSCH		0 204 116 328	**CF003**	0 204 122 180	**PF136**	0 204 123 166	**PF218**	0 204 123 517	**PF429**
		0 204 116 329	**CF356**	0 204 122 181	**PF203**	0 204 123 168	**PF200**	0 204 123 518	**PF385**
		0 204 116 338	**CF006**	0 204 122 182	**PF030**	0 204 123 170	**PF195**	0 204 123 519	**PF462**
0 204 116 127	**CF017**	0 204 116 339	**CF082**	0 204 122 183	**PF135**	0 204 123 172	**PF131**	0 204 123 521	**PF583**
0 204 116 128	**CF045**	0 204 116 355	**CF108**	0 204 122 192	**PF116**	0 204 123 172	**PF201**	0 204 123 528	**PF042**
0 204 116 131	**CF092**	0 204 116 390	**CF017**	0 204 122 195	**PF091**	0 204 123 174	**PF202**	0 204 123 530	**PF339**
0 204 116 132	**CF093**	0 204 116 396	**CF071**	0 204 122 203	**PF091**	0 204 123 176	**PF211**	0 204 123 532	**PF235**
0 204 116 133	**CF059**	0 204 116 397	**CF124**	0 204 122 221	**PF053**	0 204 123 178	**PF211**	0 204 123 533	**PF236**
0 204 116 134	**CF060**	0 204 116 398	**CF109**	0 204 122 221	**PF017**	0 204 123 180	**PF007**	0 204 123 534	**PF235**
0 204 116 135	**CF014**	0 204 116 401	**CF186**	0 204 122 221	**PF018**	0 204 123 182	**PF217**	0 204 123 536	**PF458**
0 204 116 136	**CF015**	0 204 116 403	**CF004**	0 204 122 226	**PF018**	0 204 123 184	**PF287**	0 204 123 537	**PF538**
0 204 116 137	**CF128**	0 204 116 404	**CF068**	0 204 122 230	**PF053**	0 204 123 186	**PF188**	0 204 123 540	**PF380**
0 204 116 138	**CF129**	0 204 116 409	**CF757**	0 204 122 243	**PF006**	0 204 123 188	**PF197**	0 204 123 542	**PF381**
0 204 116 139	**CF069**	0 204 116 434	**CF132**	0 204 122 257	**PF004**	0 204 123 190	**PF271**	0 204 123 547	**PF479**
0 204 116 140	**CF081**	0 204 116 451	**CF001**	0 204 122 258	**PF014**	0 204 123 192	**PF265**	0 204 123 548	**PF254**
0 204 116 144	**CF297**	0 204 116 453	**CF270**	0 204 122 261	**PF132**	0 204 123 194	**PF230**	0 204 123 560	**PF552**
0 204 116 157	**CF067**	0 204 116 454	**CF004**	0 204 122 262	**PF185**	0 204 123 198	**PF260**	0 204 123 561	**PF553**
0 204 116 158	**CF135**	0 204 116 456	**CF079**	0 204 122 263	**PF042**	0 204 123 202	**PF196**	0 204 123 562	**PF231**
0 204 116 159	**CF531**	0 204 116 457	**CF100**	0 204 122 264	**PF009**	0 204 123 205	**PF308**	0 204 123 563	**PF248**
0 204 116 163	**CF125**	0 204 116 458	**CF101**	0 204 122 266	**PF006**	0 204 123 207	**PF227**	0 204 123 577	**PF390**
0 204 116 164	**CF225**	0 204 116 462	**CF243**	0 204 122 267	**PF042**	0 204 123 208	**PF266**	0 204 123 587	**PF481**
0 204 116 171	**CF179**	0 204 116 463	**CF629**	0 204 122 268	**PF042**	0 204 123 249	**PF007**	0 204 123 588	**PF482**
0 204 116 172	**CF178**	0 204 116 464	**CF242**	0 204 122 296	**PF009**	0 204 123 251	**PF005**	0 204 123 589	**PF582**
0 204 116 173	**CF180**	0 204 116 466	**CF382**	0 204 122 297	**PF004**	0 204 123 312	**PF031**	0 204 123 594	**PF148**
0 204 116 174	**CF122**	0 204 116 469	**CF347**	0 204 122 298	**PF017**	0 204 123 313	**PF208**	0 204 123 599	**PF308**
0 204 116 175	**CF102**	0 204 116 470	**CF347**	0 204 123 012	**PF001**	0 204 123 315	**PF205**	0 204 123 603	**PF320**
0 204 116 176	**CF017**	0 204 116 470	**CF130**	0 204 123 013	**PF076**	0 204 123 318	**PF210**	0 204 123 604	**PF532**
0 204 116 177	**CF016**	0 204 116 471	**CF134**	0 204 123 026	**PF079**	0 204 123 320	**PF207**	0 204 123 605	**PF536**
0 204 116 178	**CF130**	0 204 116 479	**CF000**	0 204 123 031	**PF171**	0 204 123 326	**PF209**	0 204 123 606	**PF525**
0 204 116 179	**CF133**	0 204 116 480	**CF144**	0 204 123 032	**PF122**	0 204 123 327	**PF206**	0 204 123 608	**PF247**
0 204 116 180	**CF122**	0 204 116 482	**CF138**	0 204 123 033	**PF021**	0 204 123 331	**PF254**	0 204 123 615	**PF547**
0 204 116 181	**CF094**	0 204 116 483	**CF139**	0 204 123 034	**PF143**	0 204 123 339	**PF234**	0 204 123 616	**PF526**
0 204 116 182	**CF131**	0 204 116 502	**CF007**	0 204 123 038	**PF150**	0 204 123 342	**PF213**	0 204 123 620	**PF592**
0 204 116 183	**CF147**	0 204 116 504	**CF085**	0 204 123 039	**PF151**	0 204 123 346	**PF180**	0 204 123 621	**PF322**
0 204 116 184	**CF148**	0 204 116 506	**CF030**	0 204 123 040	**PF152**	0 204 123 346	**PF202**	0 204 123 622	**PF323**
0 204 116 191	**CF449**	0 204 116 507	**CF036**	0 204 123 044	**PF097**	0 204 123 347	**PF205**	0 204 123 625	**PF543**
0 204 116 202	**CF048**	0 204 116 509	**CF040**	0 204 123 047	**PF085**	0 204 123 348	**PF208**	0 204 123 628	**PF542**
0 204 116 203	**CF049**	0 204 116 514	**CF426**	0 204 123 049	**PF057**	0 204 123 349	**PF267**	0 204 123 629	**PF789**
0 204 116 204	**CF052**	0 204 116 520	**CF050**	0 204 123 050	**PF118**	0 204 123 350	**PF268**	0 204 123 630	**PF790**
0 204 116 205	**CF053**	0 204 116 521	**CF051**	0 204 123 051	**PF080**	0 204 123 354	**PF390**	0 204 123 633	**PF650**
0 204 116 206	**CF077**	0 204 116 527	**CF201**	0 204 123 053	**PF081**	0 204 123 355	**PF602**	0 204 123 634	**PF806**
0 204 116 207	**CF078**	0 204 116 529	**CF595**	0 204 123 054	**PF022**	0 204 123 357	**PF597**	0 204 123 635	**PF540**
0 204 116 208	**CF046**	0 204 116 530	**CF070**	0 204 123 055	**PF292**	0 204 123 366	**PF245**	0 204 123 636	**PF539**
0 204 116 209	**CF047**	0 204 116 532	**CF325**	0 204 123 056	**PF084**	0 204 123 367	**PF244**	0 204 123 637	**PF660**
0 204 116 210	**CF025**	0 204 116 533	**CF326**	0 204 123 057	**PF082**	0 204 123 369	**PF304**	0 204 123 638	**PF659**
0 204 116 211	**CF026**	0 204 116 535	**CF142**	0 204 123 058	**PF139**	0 204 123 370	**PF580**	0 204 123 639	**PF658**
0 204 116 216	**CF048**	0 204 116 536	**CF143**	0 204 123 060	**PF083**	0 204 123 371	**PF251**	0 204 123 640	**PF800**
0 204 116 217	**CF049**	0 204 116 558	**CF116**	0 204 123 062	**PF295**	0 204 123 372	**PF252**	0 204 123 641	**PF500**
0 204 116 220	**CF242**	0 204 116 564	**CF682**	0 204 123 063	**PF094**	0 204 123 373	**PF272**	0 204 123 642	**PF646**
0 204 116 221	**CF243**	0 204 116 565	**CF004**	0 204 123 064	**PF115**	0 204 123 375	**PF231**	0 204 123 643	**PF803**
0 204 116 222	**CF083**	0 204 116 566	**CF515**	0 204 123 065	**PF124**	0 204 123 402	**PF149**	0 204 123 644	**PF884**
0 204 116 223	**CF084**	0 204 116 567	**CF246**	0 204 123 066	**PF098**	0 204 123 405	**PF551**	0 204 123 648	**PF544**
0 204 116 224	**CF242**	0 204 116 568	**CF167**	0 204 123 072	**PF176**	0 204 123 406	**PF818**	0 204 123 649	**PF546**
0 204 116 225	**CF243**	0 204 116 578	**CF180**	0 204 123 075	**PF169**	0 204 123 408	**PF502**	0 204 123 650	**PF545**
0 204 116 226	**CF061**	0 204 116 579	**CF568**	0 204 123 076	**PF002**	0 204 123 409	**PF503**	0 204 123 651	**PF502**
0 204 116 227	**CF062**	0 204 116 580	**CF569**	0 204 123 077	**PF154**	0 204 123 410	**PF504**	0 204 123 653	**PF625**
0 204 116 228	**CF077**	0 204 116 581	**CF085**	0 204 123 078	**PF127**	0 204 123 415	**PF437**	0 204 123 655	**PF790**
0 204 116 229	**CF078**	0 204 116 601	**CF808**	0 204 123 080	**PF095**	0 204 123 416	**PF436**	0 204 123 658	**PF798**
0 204 116 230	**CF025**	0 204 116 602	**CF777**	0 204 123 083	**PF153**	0 204 123 417	**PF437**	0 204 123 663	**PF862**
0 204 116 231	**CF026**	0 204 116 603	**CF067**	0 204 123 084	**PF036**	0 204 123 418	**PF436**	0 204 123 664	**PF861**
0 204 116 232	**CF065**	0 204 116 604	**CF067**	0 204 123 085	**PF037**	0 204 123 419	**PF273**	0 204 123 667	**PF853**
0 204 116 233	**CF066**	0 204 116 606	**CF629**	0 204 123 094	**PF128**	0 204 123 430	**PF034**	0 204 123 671	**PF186**
0 204 116 234	**CF061**	0 204 116 607	**CF802**	0 204 123 096	**PF114**	0 204 123 462	**PF174**	0 204 123 672	**PF839**
0 204 116 235	**CF062**	0 204 122 015	**PF133**	0 204 123 101	**PF175**	0 204 123 464	**PF039**	0 204 123 673	**PF840**
0 204 116 236	**CF072**	0 204 122 030	**PF054**	0 204 123 103	**PF008**	0 204 123 466	**PF041**	0 204 123 678	**PF211**
0 204 116 237	**CF073**	0 204 122 039	**PF056**	0 204 123 105	**PF007**	0 204 123 467	**PF174**	0 204 123 682	**PF700**
0 204 116 238	**CF061**	0 204 122 042	**PF055**	0 204 123 118	**PF147**	0 204 123 470	**PF032**	0 204 123 683	**PF699**
0 204 116 238	**CF072**	0 204 122 140	**PF204**	0 204 123 129	**PF189**	0 204 123 473	**PF095**	0 204 123 701	**PF560**
0 204 116 239	**CF073**	0 204 122 147	**PF116**	0 204 123 131	**PF174**	0 204 123 482	**PF228**	0 204 123 704	**PF962**
0 204 116 244	**CF145**	0 204 122 149	**PF025**	0 204 123 136	**PF043**	0 204 123 483	**PF819**	0 204 123 706	**PF962**
0 204 116 245	**CF146**	0 204 122 149	**PF144**	0 204 123 138	**PF212**	0 204 123 484	**PF304**	0 204 123 707	**PF790**
0 204 116 249	**CF179**	0 204 122 150	**PF031**	0 204 123 140	**PF191**	0 204 123 485	**PF580**	0 204 123 711	**PF843**
0 204 116 251	**CF180**	0 204 122 156	**PF116**	0 204 123 142	**PF173**	0 204 123 501	**PF274**	0 204 123 712	**PF842**
0 204 116 253	**CF169**	0 204 122 157	**PF026**	0 204 123 151	**PF134**	0 204 123 502	**PF269**	0 204 123 713	**PF847**
0 204 116 259	**CF231**	0 204 122 164	**PF138**	0 204 123 155	**PF192**	0 204 123 509	**PF247**	0 204 123 714	**PF844**
0 204 116 262	**CF534**	0 204 122 171	**PF117**	0 204 123 156	**PF041**	0 204 123 511	**PF275**	0 204 123 715	**PF870**
0 204 116 305	**CF172**	0 204 122 176	**PF028**	0 204 123 158	**PF043**	0 204 123 512	**PF575**	0 204 123 716	**PF898**
0 204 116 324	**CF813**	0 204 122 179	**PF137**	0 204 123 162	**PF191**	0 204 123 516	**PF464**	0 204 123 717	**PF988**

CROSS REFERENCES LIST

Ad. OE	FRITECH ref.	Ad. OE	FRITECH ref.	Ad. OE	FRITECH ref.	Ad. OE	FRITECH ref.	Ad. OE	FRITECH ref.
BOSCH		0 204 162 095	**PZ067**	0 986 475 425	**CF358**	0 986 475 661	**CF236**	0 986 475 782	**CF366**
		0 204 162 119	**PZ032**	0 986 475 428	**CF104**	0 986 475 662	**CF177**	0 986 475 786	**CF395**
		0 204 163 017	**CZ019**	0 986 475 433	**CF107**	0 986 475 663	**CF269**	0 986 475 787	**CF396**
0 204 123 718	**PF874**	0 204 163 035	**CZ008**	0 986 475 433	**CF121**	0 986 475 664	**CF308**	0 986 475 788	**CF023**
0 204 123 719	**PF875**	0 204 163 064	**CZ012**	0 986 475 438	**CF080**	0 986 475 665	**CF540**	0 986 475 789	**CF024**
0 204 123 720	**PF876**	0 204 163 067	**CZ001**	0 986 475 438	**CF725**	0 986 475 666	**CF496**	0 986 475 790	**CF091**
0 204 123 721	**PF724**	0 204 163 068	**CZ007**	0 986 475 445	**CF351**	0 986 475 668	**CF572**	0 986 475 791	**CF442**
0 204 123 722	**PF874**	0 204 163 074	**CZ035**	0 986 475 446	**CF347**	0 986 475 669	**CF757**	0 986 475 792	**CF404**
0 204 123 723	**PF875**	0 204 163 077	**CZ023**	0 986 475 448	**CF339**	0 986 475 670	**CF174**	0 986 475 793	**CF191**
0 204 123 724	**PF876**	0 204 163 078	**CZ008**	0 986 475 449	**CF008**	0 986 475 671	**CF562**	0 986 475 795	**CF171**
0 204 123 726	**PF987**	0 204 163 079	**CZ030**	0 986 475 450	**CF008**	0 986 475 672	**CF204**	0 986 475 796	**CF160**
0 204 123 732	**PF984**	0 204 163 080	**CZ023**	0 986 475 451	**CF352**	0 986 475 674	**CF168**	0 986 475 797	**CF159**
0 204 123 733	**PF985**	0 204 163 081	**CZ024**	0 986 475 451	**CF394**	0 986 475 675	**CF517**	0 986 475 798	**CF135**
0 204 123 734	**PF845**	0 204 210 007	**CF570**	0 986 475 451	**CF233**	0 986 475 677	**CF089**	0 986 475 799	**CF189**
0 204 123 736	**PF798**	0 204 210 008	**CF571**	0 986 475 452	**CF365**	0 986 475 680	**CF291**	0 986 475 800	**CF190**
0 204 123 737	**PF873**	0 204 211 014	**CF570**	0 986 475 453	**CF044**	0 986 475 681	**CF309**	0 986 475 801	**CF181**
0 204 123 738	**PF700**	0 204 211 015	**CF571**	0 986 475 454	**CF670**	0 986 475 687	**CF307**	0 986 475 802	**CF182**
0 204 123 739	**PF699**	0 204 214 282	**CF850**	0 986 475 474	**CF172**	0 986 475 688	**CF241**	0 986 475 803	**CF183**
0 204 123 740	**PF857**	0 204 255 049	**PF897**	0 986 475 475	**CF228**	0 986 475 701	**CF450**	0 986 475 805	**CF408**
0 204 123 741	**PF858**	0 204 701 702	**PF987**	0 986 475 476	**CF229**	0 986 475 702	**CF451**	0 986 475 806	**CF409**
0 204 123 746	**PF798**	0 204 709 703	**PF873**	0 986 475 485	**CF270**	0 986 475 703	**CF284**	0 986 475 807	**CF237**
0 204 123 747	**PF915**	0 204 709 705	**PF798**	0 986 475 500	**CF196**	0 986 475 704	**CF285**	0 986 475 808	**CF234**
0 204 123 751	**PF967**	0 204 720 435	**PF901**	0 986 475 502	**CF085**	0 986 475 705	**CF206**	0 986 475 809	**CF235**
0 204 123 755	**PF969**	0 204 743 073	**PF858**	0 986 475 508	**CF041**	0 986 475 706	**CF207**	0 986 475 811	**CF268**
0 204 123 756	**PF967**	0 204 747 206	**PF965**	0 986 475 509	**CF095**	0 986 475 707	**CF206**	0 986 475 812	**CF240**
0 204 123 761	**PF987**	0 204 822 479	**PF857**	0 986 475 510	**CF050**	0 986 475 708	**CF207**	0 986 475 813	**CF355**
0 204 123 764	**PF937**	0 986 123 560	**PF552**	0 986 475 511	**CF051**	0 986 475 709	**CF464**	0 986 475 814	**CF251**
0 204 123 765	**PF847**	0 986 475 005	**CF202**	0 986 475 512	**CF089**	0 986 475 710	**CF463**	0 986 475 815	**CF335**
0 204 123 766	**PF847**	0 986 475 015	**CF486**	0 986 475 513	**CF088**	0 986 475 711	**CF464**	0 986 475 816	**CF090**
0 204 123 767	**PF793**	0 986 475 017	**CF171**	0 986 475 531	**CF435**	0 986 475 711	**CF498**	0 986 475 819	**CF274**
0 204 123 775	**PF986**	0 986 475 019	**CF233**	0 986 475 533	**CF271**	0 986 475 714	**CF463**	0 986 475 820	**CF275**
0 204 123 781	**PF970**	0 986 475 020	**CF153**	0 986 475 536	**CF604**	0 986 475 714	**CF497**	0 986 475 821	**CF221**
0 204 123 782	**PF970**	0 986 475 022	**CF105**	0 986 475 558	**CF197**	0 986 475 718	**CF299**	0 986 475 822	**CF220**
0 204 123 784	**PF793**	0 986 475 023	**CF166**	0 986 475 560	**CF403**	0 986 475 719	**CF298**	0 986 475 823	**CF424**
0 204 123 786	**PF857**	0 986 475 024	**CF004**	0 986 475 562	**CF406**	0 986 475 726	**CF467**	0 986 475 824	**CF223**
0 204 123 787	**PF794**	0 986 475 026	**CF006**	0 986 475 572	**CF345**	0 986 475 727	**CF468**	0 986 475 825	**CF222**
0 204 123 800	**PF967**	0 986 475 028	**CF044**	0 986 475 573	**CF413**	0 986 475 728	**CF465**	0 986 475 826	**CF209**
0 204 123 801	**PF966**	0 986 475 029	**CF154**	0 986 475 574	**CF346**	0 986 475 729	**CF466**	0 986 475 827	**CF116**
0 204 123 804	**PF969**	0 986 475 031	**CF155**	0 986 475 575	**CF412**	0 986 475 730	**CF215**	0 986 475 828	**CF282**
0 204 123 805	**PF968**	0 986 475 032	**CF009**	0 986 475 577	**CF346**	0 986 475 731	**CF214**	0 986 475 829	**CF441**
0 204 123 809	**PF916**	0 986 475 033	**CF283**	0 986 475 578	**CF345**	0 986 475 732	**CF164**	0 986 475 830	**CF440**
0 204 123 811	**PF918**	0 986 475 038	**CF523**	0 986 475 588	**CF152**	0 986 475 733	**CF165**	0 986 475 831	**CF192**
0 204 123 813	**PF917**	0 986 475 039	**CF127**	0 986 475 603	**CF412**	0 986 475 734	**CF313**	0 986 475 833	**CF162**
0 204 123 815	**PF919**	0 986 475 042	**CF257**	0 986 475 611	**CF486**	0 986 475 735	**CF314**	0 986 475 834	**CF043**
0 204 123 816	**PF912**	0 986 475 051	**CF250**	0 986 475 612	**CF210**	0 986 475 736	**CF245**	0 986 475 835	**CF042**
0 204 123 817	**PF912**	0 986 475 053	**CF021**	0 986 475 614	**CF545**	0 986 475 737	**CF216**	0 986 475 836	**CF158**
0 204 123 818	**PF914**	0 986 475 054	**CF022**	0 986 475 615	**CF032**	0 986 475 739	**CF095**	0 986 475 837	**CF161**
0 204 123 820	**PF913**	0 986 475 056	**CF306**	0 986 475 616	**CF033**	0 986 475 740	**CF007**	0 986 475 838	**CF085**
0 204 123 821	**PF913**	0 986 475 057	**CF106**	0 986 475 619	**CF063**	0 986 475 741	**CF075**	0 986 475 839	**CF538**
0 204 123 858	**PF304**	0 986 475 110	**CF367**	0 986 475 620	**CF064**	0 986 475 742	**CF175**	0 986 475 840	**CF302**
0 204 123 893	**PF390**	0 986 475 115	**CF156**	0 986 475 621	**CF078**	0 986 475 744	**CF195**	0 986 475 841	**CF174**
0 204 125 430	**PF238**	0 986 475 119	**CF082**	0 986 475 622	**CF077**	0 986 475 744	**CF002**	0 986 475 844	**CF412**
0 204 125 520	**PF465**	0 986 475 143	**CF074**	0 986 475 629	**CF078**	0 986 475 747	**CF178**	0 986 475 845	**CF473**
0 204 131 027	**CT009**	0 986 475 143	**CF185**	0 986 475 630	**CF077**	0 986 475 750	**CF096**	0 986 475 846	**CF710**
0 204 131 118	**CT010**	0 986 475 216	**CF264**	0 986 475 634	**CF061**	0 986 475 751	**CF097**	0 986 475 847	**CF709**
0 204 131 223	**CT006**	0 986 475 228	**CF030**	0 986 475 634	**CF072**	0 986 475 752	**CF136**	0 986 475 848	**CF311**
0 204 131 226	**CT011**	0 986 475 230	**CF036**	0 986 475 635	**CF042**	0 986 475 754	**CF439**	0 986 475 849	**CF312**
0 204 131 226	**CT012**	0 986 475 231	**CF056**	0 986 475 636	**CF043**	0 986 475 755	**CF302**	0 986 475 851	**CF539**
0 204 131 227	**CT004**	0 986 475 232	**CF055**	0 986 475 637	**CF026**	0 986 475 758	**CF494**	0 986 475 854	**CF253**
0 204 131 228	**CT011**	0 986 475 233	**CF012**	0 986 475 638	**CF062**	0 986 475 759	**CF184**	0 986 475 855	**CF252**
0 204 131 232	**CT016**	0 986 475 234	**CF013**	0 986 475 641	**CF042**	0 986 475 761	**CF205**	0 986 475 856	**CF544**
0 204 131 237	**CT013**	0 986 475 249	**CF343**	0 986 475 642	**CF043**	0 986 475 764	**CF225**	0 986 475 857	**CF543**
0 204 131 239	**CT003**	0 986 475 250	**CF342**	0 986 475 643	**CF042**	0 986 475 765	**CF140**	0 986 475 858	**CF512**
0 204 131 264	**CT008**	0 986 475 260	**CF000**	0 986 475 644	**CF043**	0 986 475 766	**CF301**	0 986 475 859	**CF509**
0 204 162 029	**PZ024**	0 986 475 260	**CF239**	0 986 475 645	**CF066**	0 986 475 767	**CF634**	0 986 475 860	**CF303**
0 204 162 065	**PZ008**	0 986 475 264	**CF194**	0 986 475 646	**CF065**	0 986 475 768	**CF273**	0 986 475 861	**CF513**
0 204 162 066	**PZ021**	0 986 475 265	**CF193**	0 986 475 649	**CF214**	0 986 475 769	**CF126**	0 986 475 862	**CF646**
0 204 162 071	**PZ006**	0 986 475 266	**CF300**	0 986 475 650	**CF215**	0 986 475 772	**CF267**	0 986 475 863	**CF647**
0 204 162 075	**PZ005**	0 986 475 273	**CF002**	0 986 475 651	**CF212**	0 986 475 773	**CF339**	0 986 475 864	**CF149**
0 204 162 077	**PZ001**	0 986 475 285	**CF357**	0 986 475 652	**CF213**	0 986 475 774	**CF194**	0 986 475 865	**CF537**
0 204 162 078	**PZ025**	0 986 475 290	**CF001**	0 986 475 653	**CF176**	0 986 475 775	**CF233**	0 986 475 865	**CF150**
0 204 162 079	**PZ028**	0 986 475 290	**CF532**	0 986 475 654	**CF079**	0 986 475 776	**CF075**	0 986 475 866	**CF573**
0 204 162 080	**PZ013**	0 986 475 374	**CF003**	0 986 475 655	**CF100**	0 986 475 776	**CF721**	0 986 475 867	**CF141**
0 204 162 081	**PZ015**	0 986 475 393	**CF039**	0 986 475 657	**CF226**	0 986 475 777	**CF394**	0 986 475 868	**CF316**
0 204 162 084	**PZ018**	0 986 475 394	**CF040**	0 986 475 658	**CF561**	0 986 475 778	**CF489**	0 986 475 869	**CF320**
0 204 162 088	**PZ060**	0 986 475 397	**CF123**	0 986 475 659	**CF562**	0 986 475 779	**CF199**	0 986 475 870	**CF317**
0 204 162 094	**PZ033**	0 986 475 420	**CF157**	0 986 475 660	**CF218**	0 986 475 780	**CF199**	0 986 475 871	**CF135**
0 204 162 095	**PZ034**	0 986 475 424	**CF076**	0 986 475 660	**CF227**	0 986 475 781	**CF533**	0 986 475 872	**CF436**

Ad. OE	FRITECH ref.	Ad. OE	FRITECH ref.	Ad. OE	FRITECH ref.	Ad. OE	FRITECH ref.	Ad. OE	FRITECH ref.
BOSCH		0 986 475 956	**CF849**	0 986 480 429	**PF059**	0 986 480 866	**PF263**	0 986 481 020	**PF232**
		0 986 475 957	**CF836**	0 986 480 430	**PF059**	0 986 480 868	**PF614**	0 986 481 022	**PF241**
		0 986 475 958	**CF837**	0 986 480 433	**PF293**	0 986 480 869	**PF310**	0 986 481 023	**PF553**
0 986 475 873	**CF437**	0 986 475 961	**CF553**	0 986 480 434	**PF060**	0 986 480 870	**PF647**	0 986 481 026	**PF976**
0 986 475 874	**CF151**	0 986 475 962	**CF821**	0 986 480 436	**PF178**	0 986 480 870	**PF869**	0 986 481 027	**PF262**
0 986 475 875	**CF318**	0 986 475 963	**CF822**	0 986 480 440	**PF142**	0 986 480 871	**PF613**	0 986 481 028	**PF557**
0 986 475 875	**CF856**	0 986 475 964	**CF716**	0 986 480 449	**PF040**	0 986 480 872	**PF381**	0 986 481 029	**PF308**
0 986 475 876	**CF290**	0 986 475 965	**CF464**	0 986 480 453	**PF063**	0 986 480 876	**PF601**	0 986 481 030	**PF393**
0 986 475 877	**CF460**	0 986 475 966	**CF583**	0 986 480 454	**PF064**	0 986 480 877	**PF284**	0 986 481 031	**PF729**
0 986 475 878	**CF779**	0 986 475 967	**CF773**	0 986 480 465	**PF087**	0 986 480 878	**PF609**	0 986 481 032	**PF641**
0 986 475 881	**CF580**	0 986 475 969	**CF852**	0 986 480 465	**PF107**	0 986 480 879	**PF506**	0 986 481 033	**PF313**
0 986 475 882	**CF788**	0 986 475 970	**CF853**	0 986 480 483	**PF167**	0 986 480 881	**PF514**	0 986 481 034	**PF257**
0 986 475 883	**CF578**	0 986 475 971	**CF865**	0 986 480 485	**PF160**	0 986 480 882	**PF615**	0 986 481 035	**PF312**
0 986 475 884	**CF577**	0 986 475 974	**CF866**	0 986 480 493	**PF109**	0 986 480 884	**PF638**	0 986 481 036	**PF438**
0 986 475 885	**CF255**	0 986 475 976	**CF295**	0 986 480 494	**PF166**	0 986 480 886	**PF530**	0 986 481 037	**PF442**
0 986 475 886	**CF677**	0 986 475 977	**CF296**	0 986 480 495	**PF110**	0 986 480 888	**PF598**	0 986 481 038	**PF443**
0 986 475 889	**CF678**	0 986 475 978	**CF574**	0 986 480 496	**PF165**	0 986 480 889	**PF529**	0 986 481 039	**PF448**
0 986 475 890	**CF679**	0 986 475 979	**CF576**	0 986 480 502	**PF121**	0 986 480 890	**PF223**	0 986 481 040	**PF452**
0 986 475 891	**CF701**	0 986 475 982	**CF824**	0 986 480 565	**PF105**	0 986 480 895	**PF157**	0 986 481 041	**PF452**
0 986 475 892	**CF211**	0 986 475 983	**CF823**	0 986 480 569	**PF160**	0 986 480 897	**PF008**	0 986 481 042	**PF524**
0 986 475 893	**CF546**	0 986 475 984	**CF247**	0 986 480 572	**PF033**	0 986 480 898	**PF200**	0 986 481 043	**PF442**
0 986 475 894	**CF510**	0 986 475 985	**CF862**	0 986 480 572	**PF041**	0 986 480 902	**PF405**	0 986 481 044	**PF443**
0 986 475 895	**CF806**	0 986 475 986	**CF863**	0 986 480 572	**PF231**	0 986 480 904	**PF195**	0 986 481 045	**PF584**
0 986 475 896	**CF807**	0 986 475 989	**CF909**	0 986 480 598	**PF326**	0 986 480 906	**PF035**	0 986 481 046	**PF534**
0 986 475 897	**CF708**	0 986 475 990	**CF999**	0 986 480 600	**PF220**	0 986 480 907	**PF214**	0 986 481 047	**PF600**
0 986 475 898	**CF707**	0 986 475 991	**CF1000**	0 986 480 603	**PF327**	0 986 480 908	**PF401**	0 986 481 050	**PF978**
0 986 475 900	**CF564**	0 986 475 992	**CF1001**	0 986 480 607	**PF034**	0 986 480 911	**PF215**	0 986 481 051	**PF979**
0 986 475 901	**CF327**	0 986 478 095	**PF286**	0 986 480 609	**PF108**	0 986 480 919	**PF490**	0 986 481 052	**PF980**
0 986 475 902	**CF787**	0 986 478 885	**CF255**	0 986 480 612	**PF111**	0 986 480 921	**PF285**	0 986 481 057	**PF715**
0 986 475 903	**CF579**	0 986 480 005	**PF005**	0 986 480 618	**PF098**	0 986 480 923	**PF487**	0 986 481 058	**PF866**
0 986 475 904	**CF778**	0 986 480 005	**PF007**	0 986 480 620	**PF475**	0 986 480 925	**PF593**	0 986 481 059	**PF865**
0 986 475 905	**CF581**	0 986 480 010	**PF279**	0 986 480 621	**PF104**	0 986 480 930	**PF309**	0 986 481 060	**PF892**
0 986 475 906	**CF182**	0 986 480 020	**PF158**	0 986 480 622	**PF224**	0 986 480 931	**PF283**	0 986 481 061	**PF693**
0 986 475 907	**CF683**	0 986 480 039	**PF326**	0 986 480 623	**PF111**	0 986 480 933	**PF253**	0 986 481 062	**PF528**
0 986 475 908	**CF684**	0 986 480 049	**PF053**	0 986 480 625	**PF112**	0 986 480 934	**PF653**	0 986 481 063	**PF531**
0 986 475 909	**CF520**	0 986 480 050	**PF017**	0 986 480 630	**PF359**	0 986 480 935	**PF492**	0 986 481 064	**PF895**
0 986 475 912	**CF648**	0 986 480 050	**PF018**	0 986 480 636	**PF289**	0 986 480 936	**PF240**	0 986 481 065	**PF924**
0 986 475 913	**CF636**	0 986 480 052	**PF018**	0 986 480 638	**PF225**	0 986 480 937	**PF633**	0 986 481 066	**PF849**
0 986 475 914	**CF563**	0 986 480 057	**PF146**	0 986 480 642	**PF226**	0 986 480 938	**PF836**	0 986 481 068	**PF646**
0 986 475 915	**CF696**	0 986 480 058	**PF095**	0 986 480 656	**PF023**	0 986 480 939	**PF242**	0 986 481 070	**PF526**
0 986 475 916	**CF695**	0 986 480 061	**PF155**	0 986 480 662	**PF955**	0 986 480 944	**PF522**	0 986 481 078	**PF629**
0 986 475 917	**CF598**	0 986 480 070	**PF061**	0 986 480 663	**PF270**	0 986 480 953	**PF905**	0 986 481 087	**PF802**
0 986 475 918	**CF832**	0 986 480 071	**PF062**	0 986 480 669	**PF091**	0 986 480 955	**PF286**	0 986 481 088	**PF890**
0 986 475 919	**CF542**	0 986 480 080	**PF179**	0 986 480 678	**PF307**	0 986 480 958	**PF810**	0 986 481 091	**PF846**
0 986 475 920	**CF541**	0 986 480 081	**PF248**	0 986 480 680	**PF239**	0 986 480 966	**PF277**	0 986 481 092	**PF704**
0 986 475 921	**CF308**	0 986 480 084	**PF179**	0 986 480 682	**PF039**	0 986 480 974	**PF383**	0 986 481 105	**PF973**
0 986 475 922	**CF309**	0 986 480 093	**PF164**	0 986 480 683	**PF359**	0 986 480 976	**PF608**	0 986 482 012	**CT011**
0 986 475 924	**CF304**	0 986 480 113	**PF163**	0 986 480 684	**PF282**	0 986 480 977	**PF311**	0 986 486 000	**PZ014**
0 986 475 925	**CF790**	0 986 480 114	**PF161**	0 986 480 687	**PF527**	0 986 480 984	**PF288**	0 986 486 001	**PZ013**
0 986 475 926	**CF552**	0 986 480 115	**PF168**	0 986 480 697	**PF398**	0 986 480 986	**PF305**	0 986 486 004	**PZ016**
0 986 475 927	**CF839**	0 986 480 117	**PF159**	0 986 480 698	**PF394**	0 986 480 987	**PF493**	0 986 486 005	**PZ020**
0 986 475 927	**CF804**	0 986 480 118	**PF164**	0 986 480 699	**PF280**	0 986 480 988	**PF505**	0 986 486 017	**PZ030**
0 986 475 928	**CF585**	0 986 480 121	**PF009**	0 986 480 702	**PF182**	0 986 480 990	**PF815**	0 986 486 023	**PZ022**
0 986 475 929	**CF586**	0 986 480 122	**PF097**	0 986 480 705	**PF019**	0 986 480 991	**PF518**	0 986 486 029	**PZ094**
0 986 475 931	**CF798**	0 986 480 127	**PF148**	0 986 480 721	**PF610**	0 986 480 992	**PF960**	0 986 486 029	**PZ108**
0 986 475 933	**CF780**	0 986 480 129	**PF198**	0 986 480 722	**PF611**	0 986 480 993	**PF521**	0 986 486 031	**PZ064**
0 986 475 934	**CF780**	0 986 480 130	**PF038**	0 986 480 723	**PF654**	0 986 480 994	**PF581**	0 986 486 031	**PZ107**
0 986 475 935	**CF167**	0 986 480 132	**PF199**	0 986 480 724	**PF626**	0 986 480 995	**PF397**	0 986 486 034	**PZ081**
0 986 475 936	**CF827**	0 986 480 135	**PF194**	0 986 480 752	**PF219**	0 986 480 996	**PF449**	0 986 486 034	**PZ101**
0 986 475 937	**CF778**	0 986 480 136	**PF114**	0 986 480 773	**PF171**	0 986 480 997	**PF635**	0 986 486 037	**PZ082**
0 986 475 938	**CF814**	0 986 480 139	**PF170**	0 986 480 774	**PF221**	0 986 480 998	**PF636**	0 986 486 038	**PZ061**
0 986 475 939	**CF074**	0 986 480 140	**PF248**	0 986 480 818	**PF193**	0 986 480 999	**PF623**	0 986 486 040	**PZ087**
0 986 475 940	**CF829**	0 986 480 141	**PF177**	0 986 480 820	**PF463**	0 986 481 000	**PF480**	0 986 486 041	**PZ062**
0 986 475 941	**CF135**	0 986 480 142	**PF039**	0 986 480 820	**PF973**	0 986 481 001	**PF899**	0 986 486 042	**PZ050**
0 986 475 942	**CF819**	0 986 480 227	**PF057**	0 986 480 830	**PF291**	0 986 481 002	**PF585**	0 986 486 043	**PZ023**
0 986 475 943	**CF820**	0 986 480 257	**PF013**	0 986 480 832	**PF222**	0 986 481 003	**PF509**	0 986 486 043	**PZ113**
0 986 475 944	**CF816**	0 986 480 333	**PF032**	0 986 480 833	**PF276**	0 986 481 005	**PF509**	0 986 486 044	**PZ065**
0 986 475 945	**CF817**	0 986 480 336	**PF096**	0 986 480 834	**PF434**	0 986 481 006	**PF879**	0 986 486 048	**PZ149**
0 986 475 946	**CF969**	0 986 480 350	**PF123**	0 986 480 838	**PF215**	0 986 481 007	**PF821**	0 986 486 049	**PZ080**
0 986 475 946	**CF834**	0 986 480 351	**PF156**	0 986 480 847	**PF230**	0 986 481 008	**PF533**	0 986 486 049	**PZ102**
0 986 475 947	**CF825**	0 986 480 352	**PF124**	0 986 480 849	**PF594**	0 986 481 009	**PF535**	0 986 486 050	**PZ091**
0 986 475 948	**CF826**	0 986 480 379	**PF050**	0 986 480 850	**PF329**	0 986 481 010	**PF804**	0 986 486 053	**PZ075**
0 986 475 949	**CF780**	0 986 480 379	**PF004**	0 986 480 851	**PF290**	0 986 481 012	**PF992**	0 986 486 054	**PZ085**
0 986 475 951	**CF808**	0 986 480 379	**PF074**	0 986 480 854	**PF243**	0 986 481 013	**PF494**	0 986 486 054	**PZ105**
0 986 475 952	**CF979**	0 986 480 381	**PF044**	0 986 480 858	**PF520**	0 986 481 014	**PF495**	0 986 486 055	**PZ092**
0 986 475 953	**CF258**	0 986 480 401	**PF020**	0 986 480 859	**PF281**	0 986 481 015	**PF548**	0 986 486 056	**PZ029**
0 986 475 954	**CF677**	0 986 480 428	**PF058**	0 986 480 862	**PF024**	0 986 481 016	**PF549**	0 986 486 056	**PZ100**
0 986 475 955	**CF811**	0 986 480 428	**PF059**	0 986 480 865	**PF239**	0 986 481 018	**PF045**	0 986 486 060	**PZ077**

CROSS REFERENCES LIST

Ad. OE	FRITECH ref.	Ad. OE	FRITECH ref.	Ad. OE	FRITECH ref.	Ad. OE	FRITECH ref.	Ad. OE	FRITECH ref.
BOSCH		F 026 002 009	**CF292**	F 026 002 223	**CF084**	F 026 002 457	**CF100**	F 026 003 176	**PF126**
		F 026 002 010	**CF855**	F 026 002 224	**CF242**	F 026 002 458	**CF101**	F 026 003 179	**PF137**
		F 026 002 011	**CF859**	F 026 002 225	**CF243**	F 026 002 462	**CF243**	F 026 003 180	**PF007**
0 986 486 063	**PZ079**	F 026 002 012	**CF346**	F 026 002 228	**CF077**	F 026 002 463	**CF801**	F 026 003 184	**PF287**
0 986 486 063	**PZ104**	F 026 002 014	**CF570**	F 026 002 229	**CF078**	F 026 002 464	**CF242**	F 026 003 188	**PF197**
0 986 486 064	**PZ096**	F 026 002 015	**CF571**	F 026 002 230	**CF025**	F 026 002 470	**CF347**	F 026 003 188	**PF462**
0 986 486 064	**PZ110**	F 026 002 028	**CF921**	F 026 002 231	**CF026**	F 026 002 470	**CF068**	F 026 003 190	**PF271**
0 986 486 065	**PZ080**	F 026 002 037	**CF448**	F 026 002 232	**CF033**	F 026 002 471	**CF134**	F 026 003 192	**PF265**
0 986 486 065	**PZ102**	F 026 002 038	**CF447**	F 026 002 232	**CF065**	F 026 002 474	**CF067**	F 026 003 194	**PF031**
0 986 486 066	**PZ118**	F 026 002 053	**CF529**	F 026 002 233	**CF066**	F 026 002 478	**CF950**	F 026 003 207	**PF227**
0 986 486 067	**PZ119**	F 026 002 060	**CF037**	F 026 002 234	**CF061**	F 026 002 480	**CF144**	F 026 003 208	**PF266**
0 986 486 073	**PZ038**	F 026 002 061	**CF038**	F 026 002 234	**CF072**	F 026 002 482	**CF138**	F 026 003 226	**PF017**
0 986 486 077	**PZ039**	F 026 002 071	**CF086**	F 026 002 235	**CF062**	F 026 002 483	**CF139**	F 026 003 226	**PF018**
0 986 486 083	**PZ076**	F 026 002 072	**CF087**	F 026 002 235	**CF073**	F 026 002 502	**CF007**	F 026 003 243	**PF006**
0 986 486 083	**PZ106**	F 026 002 073	**CF120**	F 026 002 236	**CF026**	F 026 002 502	**CF786**	F 026 003 257	**PF170**
0 986 486 084	**PZ073**	F 026 002 074	**CF011**	F 026 002 236	**CF072**	F 026 002 506	**CF030**	F 026 003 262	**PF185**
0 986 486 091	**PZ090**	F 026 002 075	**CF054**	F 026 002 237	**CF025**	F 026 002 507	**CF036**	F 026 003 266	**PF006**
0 986 486 092	**PZ039**	F 026 002 080	**CF020**	F 026 002 237	**CF073**	F 026 002 520	**CF050**	F 026 003 276	**PF835**
0 986 486 095	**PZ097**	F 026 002 083	**CF350**	F 026 002 238	**CF072**	F 026 002 521	**CF051**	F 026 003 296	**PF009**
0 986 486 104	**PZ068**	F 026 002 087	**CF027**	F 026 002 239	**CF073**	F 026 002 527	**CF201**	F 026 003 313	**PF208**
0 986 486 105	**PZ071**	F 026 002 091	**CF389**	F 026 002 241	**CF803**	F 026 002 529	**CF595**	F 026 003 315	**PF205**
0 986 486 108	**PZ095**	F 026 002 092	**CF390**	F 026 002 244	**CF145**	F 026 002 532	**CF325**	F 026 003 315	**PF206**
0 986 486 108	**PZ109**	F 026 002 093	**CF031**	F 026 002 245	**CF146**	F 026 002 533	**CF326**	F 026 003 318	**PF210**
0 986 486 109	**PZ099**	F 026 002 094	**CF018**	F 026 002 249	**CF870**	F 026 002 535	**CF142**	F 026 003 328	**PF203**
0 986 486 141	**PZ094**	F 026 002 096	**CF392**	F 026 002 253	**CF169**	F 026 002 536	**CF143**	F 026 003 342	**PF213**
0 986 486 141	**PZ108**	F 026 002 097	**CF391**	F 026 002 259	**CF231**	F 026 002 558	**CF116**	F 026 003 342	**PF270**
0 986 486 142	**PZ066**	F 026 002 101	**CF058**	F 026 002 282	**CF850**	F 026 002 564	**CF682**	F 026 003 349	**PF267**
0 986 486 143	**PZ151**	F 026 002 102	**CF057**	F 026 002 305	**CF172**	F 026 002 565	**CF004**	F 026 003 354	**PF390**
0 986 486 146	**PZ150**	F 026 002 105	**CF003**	F 026 002 338	**CF006**	F 026 002 566	**CF515**	F 026 003 366	**PF245**
0 986 486 149	**PZ154**	F 026 002 106	**CF200**	F 026 002 339	**CF082**	F 026 002 567	**CF246**	F 026 003 405	**PF551**
0 986 486 500	**CZ013**	F 026 002 107	**CF381**	F 026 002 344	**CF794**	F 026 002 573	**CF854**	F 026 003 410	**PF504**
0 986 486 502	**CZ018**	F 026 002 108	**CF203**	F 026 002 348	**CF557**	F 026 002 578	**CF180**	F 026 003 417	**PF437**
0 986 486 503	**CZ016**	F 026 002 109	**CF010**	F 026 002 349	**CF833**	F 026 002 579	**CF568**	F 026 003 419	**PF273**
0 986 486 505	**CZ008**	F 026 002 110	**CF530**	F 026 002 350	**CF982**	F 026 002 580	**CF569**	F 026 003 430	**PF034**
0 986 486 506	**CZ009**	F 026 002 122	**CF103**	F 026 002 352	**CF928**	F 026 002 581	**CF085**	F 026 003 484	**PF304**
0 986 486 532	**CZ036**	F 026 002 123	**CF008**	F 026 002 354	**CF287**	F 026 002 601	**CF808**	F 026 003 486	**PF982**
0 986 486 533	**CZ027**	F 026 002 128	**CF045**	F 026 002 356	**CF345**	F 026 002 602	**CF777**	F 026 003 501	**PF274**
0 986 486 533	**CZ095**	F 026 002 131	**CF092**	F 026 002 357	**CF500**	F 026 002 607	**CF802**	F 026 003 502	**PF269**
0 986 486 534	**CZ048**	F 026 002 132	**CF093**	F 026 002 358	**CF452**	F 026 002 671	**CF867**	F 026 003 512	**PF575**
0 986 486 535	**CZ017**	F 026 002 133	**CF059**	F 026 002 359	**CF454**	F 026 003 012	**PF001**	F 026 003 516	**PF464**
0 986 486 537	**CZ025**	F 026 002 134	**CF060**	F 026 002 360	**CF613**	F 026 003 014	**PF093**	F 026 003 517	**PF429**
0 986 486 537	**CZ093**	F 026 002 135	**CF014**	F 026 002 361	**CF591**	F 026 003 015	**PF133**	F 026 003 518	**PF196**
0 986 486 538	**CZ076**	F 026 002 136	**CF015**	F 026 002 362	**CF188**	F 026 003 019	**PF020**	F 026 003 518	**PF385**
0 986 486 542	**CZ026**	F 026 002 137	**CF128**	F 026 002 363	**CF332**	F 026 003 026	**PF079**	F 026 003 528	**PF042**
0 986 486 542	**CZ081**	F 026 002 138	**CF129**	F 026 002 364	**CF163**	F 026 003 031	**PF171**	F 026 003 548	**PF254**
0 986 486 544	**CZ112**	F 026 002 139	**CF069**	F 026 002 365	**CF232**	F 026 003 032	**PF122**	F 026 003 562	**PF033**
0 986 486 546	**CZ053**	F 026 002 140	**CF081**	F 026 002 366	**CF315**	F 026 003 033	**PF021**	F 026 003 562	**PF041**
0 986 486 547	**CZ018**	F 026 002 144	**CF297**	F 026 002 367	**CF582**	F 026 003 039	**PF056**	F 026 003 562	**PF231**
0 986 486 548	**CZ074**	F 026 002 157	**CF067**	F 026 002 368	**CF249**	F 026 003 054	**PF022**	F 026 003 563	**PF039**
0 986 486 548	**CZ096**	F 026 002 158	**CF135**	F 026 002 369	**CF248**	F 026 003 057	**PF082**	F 026 003 587	**PF481**
0 986 486 551	**CZ052**	F 026 002 163	**CF125**	F 026 002 371	**CF758**	F 026 003 058	**PF139**	F 026 003 588	**PF482**
0 986 486 551	**CZ097**	F 026 002 164	**CF225**	F 026 002 372	**CF319**	F 026 003 060	**PF083**	F 026 003 594	**PF148**
0 986 486 552	**CZ073**	F 026 002 171	**CF179**	F 026 002 373	**CF348**	F 026 003 064	**PF115**	F 026 003 603	**PF320**
0 986 486 553	**CZ086**	F 026 002 172	**CF178**	F 026 002 374	**CF941**	F 026 003 070	**PF558**	F 026 003 604	**PF532**
0 986 486 553	**CZ098**	F 026 002 173	**CF180**	F 026 002 375	**CF942**	F 026 003 071	**PF574**	F 026 003 608	**PF247**
0 986 486 554	**CZ077**	F 026 002 175	**CF102**	F 026 002 378	**CF949**	F 026 003 075	**PF169**	F 026 003 622	**PF323**
0 986 486 554	**CZ099**	F 026 002 176	**CF017**	F 026 002 379	**CF958**	F 026 003 076	**PF002**	F 026 003 625	**PF543**
0 986 486 573	**CZ071**	F 026 002 177	**CF016**	F 026 002 381	**CF933**	F 026 003 078	**PF127**	F 026 003 628	**PF542**
0 986 486 576	**CZ080**	F 026 002 178	**CF130**	F 026 002 381	**CF944**	F 026 003 084	**PF036**	F 026 003 633	**PF650**
0 986 486 577	**CZ117**	F 026 002 180	**CF122**	F 026 002 384	**CF715**	F 026 003 085	**PF037**	F 026 003 635	**PF540**
0 986 486 580	**CZ128**	F 026 002 181	**CF094**	F 026 002 385	**CF992**	F 026 003 096	**PF114**	F 026 003 636	**PF539**
0 986 486 583	**CZ083**	F 026 002 182	**CF131**	F 026 002 386	**CF993**	F 026 003 101	**PF175**	F 026 003 641	**PF500**
0 986 486 600	**CZ006**	F 026 002 183	**CF147**	F 026 002 387	**CF981**	F 026 003 103	**PF008**	F 026 003 648	**PF544**
0 986 486 601	**CZ124**	F 026 002 184	**CF148**	F 026 002 388	**CF889**	F 026 003 136	**PF043**	F 026 003 671	**PF186**
0 986 486 602	**CZ113**	F 026 002 191	**CF449**	F 026 002 389	**CF626**	F 026 003 140	**PF204**	F 026 003 704	**PF962**
0 986 486 603	**CZ115**	F 026 002 204	**CF052**	F 026 002 390	**CF775**	F 026 003 142	**PF173**	F 026 003 715	**PF870**
0 986 486 604	**CZ114**	F 026 002 205	**CF053**	F 026 002 392	**CF965**	F 026 003 149	**PF025**	F 026 003 740	**PF857**
0 986 486 605	**CZ130**	F 026 002 206	**CF077**	F 026 002 393	**CF858**	F 026 003 150	**PF031**	F 026 003 741	**PF858**
0 986 486 606	**CZ133**	F 026 002 207	**CF078**	F 026 002 394	**CF857**	F 026 003 151	**PF134**	F 026 003 940	**PF191**
0 986 486 607	**CZ118**	F 026 002 208	**CF046**	F 026 002 396	**CF071**	F 026 003 157	**PF026**	F 026 003 942	**PF499**
F 009 D00 768	**PZ037**	F 026 002 209	**CF047**	F 026 002 397	**CF124**	F 026 003 160	**PF027**	F 026 003 943	**PF015**
F 009 D00 856	**PZ070**	F 026 002 210	**CF025**	F 026 002 398	**CF109**	F 026 003 166	**PF218**	F 026 003 944	**PF072**
F 01G 09G 06A	**CF965**	F 026 002 211	**CF026**	F 026 002 401	**CF186**	F 026 003 168	**PF200**	F 026 003 980	**PF136**
F 01G 09G 070	**CF715**	F 026 002 216	**CF048**	F 026 002 434	**CF130**	F 026 003 170	**PF195**	F 026 005 075	**PZ005**
F 026 002 000	**CF903**	F 026 002 217	**CF049**	F 026 002 434	**CF132**	F 026 003 174	**PF180**	F 026 005 080	**PZ013**
F 026 002 005	**CF970**	F 026 002 220	**CF242**	F 026 002 453	**CF270**	F 026 003 174	**PF202**	F 026 005 084	**PZ018**
F 026 002 006	**CF629**	F 026 002 221	**CF243**	F 026 002 454	**CF004**	F 026 003 175	**PF835**	F 026 005 086	**CZ004**
F 026 002 007	**CF301**	F 026 002 222	**CF083**	F 026 002 454	**CF216**	F 026 003 176	**PF028**	F 026 005 094	**PZ033**

Ad. OE	FRITECH ref.
BOSCH	
F 026 005 095	**PZ067**
F 026 005 119	**PZ032**
F 026 005 517	**CZ019**
F 026 005 564	**CZ012**
F 026 005 568	**CZ007**
F 026 005 580	**CZ011**
F 026 005 580	**CZ023**
F 026 005 581	**CZ024**
F 026 005 587	**CZ070**
F 026 009 205	**CF053**
F 026 009 644	**CF043**
F 026 009 857	**CF543**
DELPHI	
LL15252	**CZ051**
LL15799	**CZ119**
LL21503	**CZ019**
LL22570	**CZ011**
LL37531	**CZ126**
LL37532	**CZ127**
LL40012	**CZ027**
LL40012	**CZ095**
LL40014	**CZ048**
LL40060	**CZ053**
LL40062	**CZ073**
LL40811	**CZ018**
LL40821	**CZ027**
LL40821	**CZ095**
LL41201	**CZ013**
LL41210	**CZ016**
LL41310	**CZ017**
LL42045	**CZ036**
LL42201	**CZ008**
LL42503	**CZ009**
LL45020	**CZ025**
LL45020	**CZ093**
LL49906	**CZ026**
LL49906	**CZ081**
LL49907	**CZ076**
LL49908	**CZ018**
LL60778	**CZ129**
LL60914	**CZ126**
LL70062	**CZ005**
LL70079	**CZ004**
LL70112	**CZ001**
LL70113	**CZ002**
LL70114	**CZ007**
LL70115	**CZ006**
LL70167	**CZ015**
LL70180	**CZ014**
LL70189	**CZ010**
LL70224	**CZ024**
LL70227	**CZ012**
LL70309	**CZ023**
LL70310	**CZ023**
LL70313	**CZ070**
LL70315	**CZ072**
LL80121	**CZ052**
LL80121	**CZ097**
LL80129	**CZ080**
LL80130	**CZ083**
LL80132	**CZ088**
LL80137	**CZ074**
LL80137	**CZ096**
LL80138	**CZ077**
LL80138	**CZ099**
LL80139	**CZ071**
LL80140	**CZ124**
LL80142	**CZ112**
LL80144	**CZ133**
LL80145	**CZ086**
LL80145	**CZ098**

Ad. OE	FRITECH ref.
LL80147	**CZ132**
LL80148	**CZ114**
LL80149	**CZ122**
LL80150	**CZ130**
LL80151	**CZ131**
LL80154	**CZ113**
LM14723	**PF119**
LM14918	**PF120**
LM15014	**PF139**
LM15075	**PF154**
LM15121	**PF112**
LM15130	**PF225**
LM15297	**PF081**
LM15298	**PF076**
LM15299	**PF093**
LM15300	**PF079**
LM15307	**PF144**
LM19748	**PZ038**
LM20000	**PF042**
LM20001	**PF042**
LM20003	**PZ025**
LM20005	**PZ033**
LM20007	**PF153**
LM20008	**PF037**
LM20009	**PF036**
LM20010	**PF175**
LM20011	**PF176**
LM20016	**PF191**
LM20017	**PF304**
LM20018	**PF188**
LM20966	**PF138**
LM21007	**PF271**
LM21008	**PF265**
LM21009	**PF197**
LM21010	**PF196**
LM21011	**PF218**
LM21012	**PF217**
LM21014	**PF227**
LM21015	**PF266**
LM21017	**PF213**
LM21021	**PF210**
LM21022	**PF209**
LM21023	**PF207**
LM21024	**PF206**
LM21025	**PF208**
LM21026	**PF205**
LM21038	**PF202**
LM21063	**PF308**
LM21065	**PF228**
LM21066	**PF230**
LM21067	**PF305**
LM21084	**PF191**
LM21085	**PF287**
LM21091	**PF234**
LM21091	**PF818**
LM21095	**PF191**
LM21260	**PF133**
LM21361	**PF054**
LM21438	**PF056**
LM21455	**PF055**
LM21519	**PF031**
LM21565	**PF117**
LM22016	**PZ015**
LM22136	**PZ024**
LM22500	**PF030**
LM23383	**PF001**
LM23386	**PF076**
LM23387	**PF093**
LM23422	**PF078**
LM23424	**PF020**
LM23459	**PF077**
LM23463	**PF079**
LM23474	**PF171**
LM23476	**PF122**
LM23477	**PF021**
LM23478	**PF143**
LM23491	**PF096**
LM23497	**PF097**

Ad. OE	FRITECH ref.
LM23510	**PF150**
LM23511	**PF151**
LM23512	**PF152**
LM23518	**PF085**
LM23519	**PF057**
LM23521	**PF118**
LM23523	**PF080**
LM23525	**PF081**
LM23526	**PF022**
LM23527	**PF292**
LM23531	**PF084**
LM23541	**PF082**
LM23580	**PF083**
LM23595	**PF295**
LM23600	**PF094**
LM23607	**PF115**
LM23626	**PF156**
LM23629	**PF098**
LM23630	**PF032**
LM23646	**PF007**
LM23647	**PF089**
LM23659	**PF008**
LM23664	**PF169**
LM23665	**PF002**
LM23683	**PF008**
LM23684	**PF127**
LM23690	**PF095**
LM23719	**PF146**
LM23740	**PF008**
LM23768	**PF170**
LM23773	**PF128**
LM23781	**PF114**
LM23822	**PF008**
LM23823	**PF007**
LM23849	**PF147**
LM23854	**PF148**
LM23877	**PF131**
LM23877	**PF201**
LM23882	**PF174**
LM23888	**PF597**
LM23892	**PF149**
LM23906	**PF043**
LM23912	**PF212**
LM23920	**PF173**
LM23955	**PF134**
LM23967	**PF192**
LM23983	**PF043**
LM23998	**PF200**
LM23999	**PF195**
LM24008	**PF185**
LM24018	**PF131**
LM24018	**PF201**
LM24019	**PF180**
LM29731	**PF031**
LM29737	**PF602**
LM29740	**PF002**
LM30009	**PF223**
LM30012	**PF220**
LM30045	**PF215**
LM30046	**PF222**
LM30052	**PF326**
LM30057	**PF155**
LM36126	**PF090**
LM36197	**PF104**
LM36199	**PF087**
LM36199	**PF107**
LM36200	**PF105**
LM36234	**PF475**
LM36355	**PF108**
LM36357	**PF121**
LM36420	**PF145**
LM36532	**PF062**
LM36619	**PF111**
LM37513	**PF121**
LM39020	**PF529**
LM39024	**PF394**
LM39033	**PF490**
LM39036	**PF327**

Ad. OE	FRITECH ref.
LM39037	**PF398**
LM39038	**PF397**
LM39051	**PF977**
LM39065	**PF254**
LM39066	**PF255**
LM39067	**PZ065**
LM39068	**PZ066**
LM39069	**PF258**
LM39070	**PF240**
LM39084	**PF905**
LM39086	**PF434**
LM39090	**PF492**
LM39091	**PF383**
LM39093	**PZ091**
LM39094	**PZ064**
LM39094	**PZ107**
LM39095	**PZ077**
LM39098	**PF239**
LM39099	**PF259**
LM39100	**PZ062**
LM39101	**PF278**
LM39102	**PF260**
LM40003	**PZ081**
LM40003	**PZ030**
LM40003	**PZ101**
LM40003	**PZ087**
LM40005	**PF040**
LM40022	**PZ023**
LM40022	**PZ113**
LM40029	**PZ029**
LM40029	**PZ100**
LM40038	**PF270**
LM40055	**PF040**
LM40111	**PF063**
LM40112	**PF064**
LM40166	**PF124**
LM40169	**PF124**
LM40211	**PF157**
LM40251	**PF039**
LM40251	**PF248**
LM40264	**PF219**
LM40282	**PF214**
LM40538	**PF279**
LM40621	**PF226**
LM40631	**PF401**
LM40818	**PF194**
LM40825	**PF158**
LM41142	**PF405**
LM41451	**PF178**
LM41491	**PF059**
LM41492	**PF059**
LM41531	**PF058**
LM41551	**PF060**
LM41572	**PF293**
LM42031	**PF005**
LM42031	**PF007**
LM42191	**PF177**
LM42242	**PF138**
LM42331	**PF179**
LM42651	**PF033**
LM42962	**PF035**
LM43012	**PF116**
LM43771	**PF041**
LM43771	**PF231**
LM46911	**PF123**
LM48000	**PZ013**
LM48401	**PZ022**
LM48512	**PF142**
LM48900	**PZ016**
LM49000	**PZ020**
LM49084	**PZ050**
LM49908	**PF228**
LM49909	**PF230**
LM49910	**PZ092**
LM49912	**PF611**
LM49913	**PF523**
LM49914	**PF291**
LM49915	**PF290**

Ad. OE	FRITECH ref.
LM49917	**PZ076**
LM49917	**PZ106**
LM49918	**PZ085**
LM49918	**PZ105**
LM49919	**PZ061**
LM49921	**PF283**
LM49922	**PF284**
LM49931	**PF213**
LM49932	**PF438**
LM49935	**PF522**
LM49937	**PF304**
LM49937	**PF819**
LM49938	**PF310**
LM49940	**PF480**
LM49943	**PF494**
LM49944	**PF495**
LM50012	**PF110**
LM50013	**PF165**
LM50015	**PF163**
LM50016	**PF164**
LM50020	**PF109**
LM50021	**PF166**
LM50025	**PF167**
LM50026	**PF162**
LM50027	**PF159**
LM50028	**PF160**
LM50048	**PF164**
LM50052	**PF162**
LM50053	**PF161**
LM50054	**PF168**
LM50056	**PF038**
LM51027	**PF199**
LM51028	**PF198**
LM51031	**PF282**
LM51032	**PF193**
LM51033	**PF280**
LM51034	**PF281**
LM51035	**PF380**
LM51036	**PF249**
LM51037	**PF250**
LM51038	**PF381**
LM51039	**PF502**
LM51040	**PF503**
LM60095	**PF262**
LM60226	**PF181**
LM60228	**PF130**
LM60519	**PF224**
LM60607	**PF184**
LM60627	**PF182**
LM60695	**PF184**
LM62016	**PF216**
LM62017	**PF189**
LM62081	**PF442**
LM62082	**PF443**
LM62099	**PZ151**
LM62102	**PF448**
LM62105	**PF586**
LM62106	**PF587**
LM62107	**PF374**
LM62111	**PF835**
LM62112	**PF835**
LM62117	**PF444**
LM62118	**PF444**
LM62119	**PF449**
LM62120	**PF452**
LM62122	**PF448**
LM62123	**PF510**
LM62124	**PF509**
LM62125	**PZ152**
LM70002	**PF004**
LM70008	**PF049**
LM70009	**PF050**
LM70010	**PF074**
LM70012	**PF048**
LM70014	**PF013**
LM70015	**PF044**
LM70016	**PF003**
LM70017	**PF044**

CROSS REFERENCES LIST

Ad. OE	FRITECH ref.	Ad. OE	FRITECH ref.	Ad. OE	FRITECH ref.	Ad. OE	FRITECH ref.	Ad. OE	FRITECH ref.
DELPHI		LM70201	**PZ019**	LM80166	**PF330**	LM80251	**PF479**	LW11088	**CF003**
		LM70222	**PZ015**	LM80166	**PF973**	LM80254	**PF448**	LW11091	**CF091**
		LM70223	**PZ034**	LM80168	**PF560**	LM80255	**PF638**	LW11179	**CF443**
LM70018	**PF072**	LM70228	**PF186**	LM80170	**PF511**	LM80256	**PF598**	LW11184	**CF163**
LM70022	**PF068**	LM70318	**PF190**	LM80171	**PF499**	LM80257	**PF646**	LW11192	**CF428**
LM70023	**PF018**	LM70320	**PZ060**	LM80172	**PF508**	LM80257	**PF870**	LW11193	**CF380**
LM70026	**PF053**	LM70321	**PF042**	LM80173	**PF507**	LM80259	**PF614**	LW11394	**CF208**
LM70030	**PF017**	LM70322	**PF042**	LM80174	**PF506**	LM80260	**PF615**	LW11396	**CF191**
LM70031	**PF053**	LM70323	**PF339**	LM80175	**PF275**	LM80262	**PF625**	LW11547	**CF386**
LM70032	**PZ004**	LM70329	**PZ018**	LM80177	**PF426**	LM80263	**PF617**	LW11548	**CF387**
LM70034	**PF012**	LM70331	**PF246**	LM80178	**PF512**	LM80264	**PF449**	LW11549	**CF336**
LM70049	**PF141**	LM70332	**PF232**	LM80179	**PF493**	LM80265	**PF452**	LW11550	**CF334**
LM70050	**PF019**	LM70340	**PF465**	LM80181	**PF513**	LM80267	**PF661**	LW11561	**CF425**
LM70051	**PF009**	LM70341	**PF238**	LM80183	**PF527**	LM80268	**PF552**	LW11563	**CF427**
LM70056	**PF294**	LM70346	**PF382**	LM80184	**PF533**	LM80269	**PF553**	LW11571	**CF444**
LM70061	**PZ112**	LM70349	**PF382**	LM80185	**PF535**	LM80270	**PZ073**	LW11574	**CF388**
LM70065	**PF073**	LM70351	**PF235**	LM80186	**PF277**	LM80272	**PZ090**	LW11575	**CF348**
LM70067	**PF015**	LM70352	**PF235**	LM80187	**PF276**	LM80273	**PZ071**	LW11596	**CF356**
LM70068	**PF051**	LM70353	**PF236**	LM80188	**PF593**	LM80274	**PZ094**	LW11633	**CF419**
LM70069	**PF053**	LM70354	**PF204**	LM80189	**PF608**	LM80274	**PZ108**	LW11640	**CF443**
LM70070	**PF052**	LM70355	**PF237**	LM80190	**PF594**	LM80275	**PZ096**	LW11782	**CF414**
LM70072	**PF047**	LM70356	**PZ032**	LM80191	**PF524**	LM80275	**PZ110**	LW11783	**CF415**
LM70073	**PF006**	LM70357	**PF429**	LM80192	**PF544**	LM80276	**PZ097**	LW11784	**CF420**
LM70074	**PF011**	LM70358	**PF464**	LM80193	**PF546**	LM80277	**PZ099**	LW11949	**CF397**
LM70075	**PF010**	LM70359	**PF229**	LM80194	**PF545**	LM80278	**PZ082**	LW11957	**CF525**
LM70077	**PZ010**	LM70360	**PF233**	LM80195	**PF481**	LM80279	**PZ149**	LW11958	**CF524**
LM70078	**PZ005**	LM70362	**PZ028**	LM80196	**PF543**	LM80280	**PF437**	LW12050	**CF189**
LM70081	**PF046**	LM70366	**PF263**	LM80197	**PF500**	LM80281	**PF530**	LW12051	**CF190**
LM70089	**PZ007**	LM70367	**PF264**	LM80198	**PF542**	LM80284	**PF623**	LW12052	**CF719**
LM70111	**PF045**	LM70368	**PF536**	LM80199	**PF540**	LM80286	**PZ118**	LW12053	**CF720**
LM70117	**PF102**	LM70369	**PF525**	LM80200	**PF531**	LM80287	**PZ095**	LW12141	**CF274**
LM70118	**PF101**	LM70371	**PF532**	LM80201	**PF528**	LM80287	**PZ109**	LW12142	**CF275**
LM70119	**PF026**	LM70372	**PF482**	LM80202	**PF581**	LM80292	**PF829**	LW15027	**CF388**
LM70120	**PF136**	LM70377	**PZ039**	LM80203	**PF558**	LM80305	**PF629**	LW15028	**CF202**
LM70121	**PF137**	LM80009	**PF359**	LM80204	**PF574**	LM80311	**PZ154**	LW15039	**CF420**
LM70122	**PF028**	LM80013	**PF039**	LM80205	**PF515**	LM80313	**PF659**	LW15041	**CF422**
LM70123	**PF099**	LM80103	**PF268**	LM80206	**PF516**	LM80314	**PF657**	LW15042	**CF423**
LM70124	**PF027**	LM80105	**PF267**	LM80207	**PF514**	LM80315	**PF818**	LW15051	**CF527**
LM70125	**PF028**	LM80110	**PF458**	LM80208	**PF518**	LM80316	**PF656**	LW15052	**CF526**
LM70126	**PZ009**	LM80111	**PF390**	LM80209	**PF517**	LM80317	**PF660**	LW15081	**CF221**
LM70127	**PZ008**	LM80112	**PF245**	LM80210	**PF519**	LM80319	**PF641**	LW15082	**CF220**
LM70128	**PZ002**	LM80113	**PF244**	LM80211	**PF576**	LM80320	**PF992**	LW15083	**CF285**
LM70129	**PZ001**	LM80114	**PF304**	LM80212	**PF538**	LM80321	**PF936**	LW15084	**CF284**
LM70129	**PZ027**	LM80115	**PF273**	LM80213	**PF261**	LM80322	**PF944**	LW15085	**CF451**
LM70130	**PZ006**	LM80117	**PF242**	LM80214	**PF592**	LM80323	**PF833**	LW15086	**CF450**
LM70131	**PF014**	LM80118	**PF269**	LM80215	**PF539**	LM80324	**PF832**	LW15087	**CF219**
LM70131	**PF045**	LM80119	**PF243**	LM80216	**PF580**	LM80326	**PF802**	LW15088	**CF175**
LM70132	**PF023**	LM80121	**PF272**	LM80217	**PF626**	LM80327	**PF442**	LW15112	**CF455**
LM70133	**PF075**	LM80122	**PF211**	LM80218	**PF530**	LM80328	**PF942**	LW15113	**CF287**
LM70134	**PZ010**	LM80123	**PF285**	LM80219	**PF557**	LM80329	**PF898**	LW15296	**CF424**
LM70134	**PZ014**	LM80124	**PF251**	LM80220	**PF537**	LM80331	**PF939**	LW15302	**CF223**
LM70135	**PF009**	LM80125	**PF286**	LM80221	**PF520**	LM80332	**PF943**	LW15303	**CF222**
LM70136	**PF091**	LM80126	**PF289**	LM80222	**PF521**	LM80334	**PF946**	LW15311	**CF163**
LM70141	**PF126**	LM80127	**PF257**	LM80224	**PF573**	LM80335	**PF799**	LW15312	**CF209**
LM70142	**PF089**	LM80128	**PF312**	LM80225	**PF601**	LM80337	**PF949**	LW15354	**CF091**
LM70146	**PF125**	LM80129	**PF311**	LM80226	**PF571**	LM80338	**PF814**	LW15971	**CF090**
LM70147	**PF025**	LM80130	**PF437**	LM80227	**PF526**	LM80340	**PF860**	LW16008	**CF116**
LM70148	**PZ005**	LM80131	**PF436**	LM80228	**PF547**	LM80341	**PF940**	LW16008ALU	**CF094**
LM70149	**PF103**	LM80132	**PF436**	LM80231	**PF582**	LM80342	**PF941**	LW17943	**CF135**
LM70153	**PF018**	LM80132	**PF288**	LM80233	**PF550**	LM80343	**PF947**	LW21054	**CF145**
LM70157	**PF029**	LM80133	**PF252**	LM80234	**PF577**	LM80344	**PF954**	LW21055	**CF146**
LM70158	**PF024**	LM80134	**PF253**	LM80235	**PF647**	LM80345	**PF958**	LW21056	**CF133**
LM70161	**PZ026**	LM80137	**PF393**	LM80235	**PF869**	LV21347	**CT010**	LW21057	**CF182**
LM70164	**PZ021**	LM80139	**PF309**	LM80236	**PF534**	LV30000	**CT016**	LW21058	**CF183**
LM70168	**PF100**	LM80140	**PZ080**	LM80238	**PF583**	LV70086	**CT001**	LW21059	**CF181**
LM70169	**PF034**	LM80140	**PZ102**	LM80239	**PF549**	LV70096	**CT003**	LW21060	**CF094**
LM70172	**PF016**	LM80141	**PF505**	LM80240	**PF241**	LV70097	**CT004**	LW21061	**CF132**
LM70184	**PF132**	LM80142	**PF322**	LM80241	**PF548**	LV70098	**CT007**	LW21064	**CF124**
LM70187	**PF086**	LM80143	**PF323**	LM80242	**PF551**	LV70099	**CT002**	LW21071	**CF147**
LM70187	**PF187**	LM80145	**PF246**	LM80243	**PZ070**	LV70100	**CT006**	LW21072	**CF148**
LM70188	**PZ009**	LM80147	**PF479**	LM80244	**PZ075**	LV70139	**CT012**	LW21073	**CF145**
LM70193	**PF042**	LM80151	**PF243**	LM80245	**PZ078**	LV70143	**CT008**	LW21074	**CF146**
LM70194	**PF203**	LM80152	**PF269**	LM80245	**PZ103**	LV70145	**CT011**	LW21089	**CF131**
LM70195	**PF042**	LM80154	**PF575**	LM80246	**PZ079**	LW10100	**CF151**	LW21092	**CF242**
LM70196	**PF140**	LM80157	**PF313**	LM80246	**PZ104**	LW10101	**CF255**	LW21093	**CF243**
LM70197	**PF135**	LM80158	**PF221**	LM80248	**PF610**	LW11053	**CF607**	LW21094	**CF629**
LM70198	**PF029**	LM80159	**PF262**	LM80249	**PF654**	LW11072	**CF341**	LW21322	**CF382**
LM70199	**PF006**	LM80165	**PF329**	LM80250	**PZ068**	LW11075	**CF262**	LW21454	**CF448**

Ad. OE	FRITECH ref.	Ad. OE	FRITECH ref.	Ad. OE	FRITECH ref.	Ad. OE	FRITECH ref.	Ad. OE	FRITECH ref.
DELPHI		LW22132	**CF102**	LW30157	**CF440**	LW39034	**CF253**	LW60108	**CF174**
		LW22135	**CF017**	LW30158	**CF441**	LW39035	**CF252**	LW60109	**CF403**
		LW22136	**CF016**	LW30159	**CF395**	LW39036	**CF162**	LW60110	**CF501**
LW21455	**CF447**	LW22136	**CF098**	LW30160	**CF396**	LW39052	**CF043**	LW60111	**CF502**
LW21504	**CF117**	LW22161	**CF130**	LW30235	**CF426**	LW39053	**CF042**	LW60111	**CF522**
LW21505	**CF118**	LW22163	**CF133**	LW30252	**CF036**	LW39171	**CF076**	LW60112	**CF518**
LW21520	**CF529**	LW22174	**CF094**	LW30258	**CF611**	LW39174	**CF573**	LW60113	**CF519**
LW21583	**CF037**	LW24109	**CF449**	LW30259	**CF612**	LW39175	**CF257**	LW60115	**CF408**
LW21584	**CF038**	LW24110	**CF449**	LW30262	**CF012**	LW39176	**CF683**	LW60116	**CF409**
LW21591	**CF355**	LW25027	**CF048**	LW30263	**CF013**	LW39177	**CF684**	LW60119	**CF206**
LW21598	**CF114**	LW25028	**CF049**	LW30266	**CF039**	LW39178	**CF256**	LW60120	**CF207**
LW21599	**CF115**	LW25031	**CF052**	LW30267	**CF040**	LW39179	**CF773**	LW60130	**CF345**
LW21627	**CF086**	LW25032	**CF053**	LW30269	**CF055**	LW39181	**CF648**	LW60131	**CF346**
LW21628	**CF087**	LW25035	**CF077**	LW30271	**CF056**	LW39185	**CF520**	LW60148	**CF215**
LW21629	**CF120**	LW25036	**CF078**	LW30312	**CF192**	LW40001	**CF177**	LW60149	**CF214**
LW21630	**CF011**	LW25055	**CF046**	LW30318	**CF123**	LW40011	**CF725**	LW60161	**CF412**
LW21639	**CF054**	LW25056	**CF047**	LW30360	**CF279**	LW40601	**CF523**	LW60169	**CF273**
LW21666	**CF338**	LW25061	**CF025**	LW30361	**CF280**	LW40611	**CF300**	LW60174	**CF213**
LW21668	**CF612**	LW25062	**CF026**	LW30397	**CF270**	LW40612	**CF127**	LW60175	**CF212**
LW21685	**CF020**	LW25063	**CF025**	LW30402	**CF377**	LW40812	**CF001**	LW60262	**CF344**
LW21691	**CF350**	LW25064	**CF026**	LW30412	**CF104**	LW40819	**CF537**	LW60263	**CF401**
LW21692	**CF383**	LW25065	**CF032**	LW30437	**CF295**	LW41112	**CF172**	LW60264	**CF435**
LW21694	**CF349**	LW25066	**CF033**	LW30438	**CF296**	LW41791	**CF283**	LW60265	**CF439**
LW21700	**CF027**	LW25077	**CF025**	LW30564	**CF041**	LW41811	**CF194**	LW60268	**CF206**
LW21707	**CF601**	LW25078	**CF142**	LW30567	**CF023**	LW42001	**CF365**	LW60269	**CF207**
LW21739	**CF020**	LW25085	**CF048**	LW30568	**CF024**	LW42106	**CF156**	LW60270	**CF461**
LW21740	**CF389**	LW25086	**CF049**	LW30646	**CF485**	LW42112	**CF000**	LW60271	**CF378**
LW21741	**CF390**	LW25101	**CF025**	LW30647	**CF294**	LW42311	**CF080**	LW60272	**CF379**
LW21751	**CF031**	LW25102	**CF026**	LW30809	**CF977**	LW43201	**CF041**	LW60274	**CF269**
LW21752	**CF018**	LW25113	**CF083**	LW30810	**CF978**	LW44013	**CF532**	LW60275	**CF471**
LW21753	**CF019**	LW25114	**CF084**	LW30855	**CF021**	LW44201	**CF367**	LW60276	**CF469**
LW21754	**CF392**	LW25121	**CF065**	LW30856	**CF022**	LW44202	**CF121**	LW60277	**CF470**
LW21755	**CF391**	LW25122	**CF066**	LW30989	**CF164**	LW44501	**CF352**	LW60279	**CF600**
LW21756	**CF125**	LW25123	**CF061**	LW30990	**CF165**	LW45016	**CF166**	LW60280	**CF271**
LW21758	**CF225**	LW25124	**CF062**	LW31035	**CF042**	LW45026	**CF725**	LW60281	**CF218**
LW21775	**CF612**	LW25125	**CF072**	LW31036	**CF043**	LW45211	**CF193**	LW60282	**CF227**
LW21776	**CF611**	LW25126	**CF073**	LW31157	**CF306**	LW45511	**CF228**	LW60283	**CF236**
LW21778	**CF058**	LW25135	**CF077**	LW31203	**CF106**	LW45512	**CF229**	LW60284	**CF740**
LW21779	**CF057**	LW25136	**CF078**	LW31289	**CF063**	LW47029	**CF239**	LW60285	**CF622**
LW21789	**CF200**	LW25137	**CF025**	LW31290	**CF064**	LW48401	**CF533**	LW60286	**CF516**
LW21792	**CF381**	LW25138	**CF026**	LW31419	**CF176**	LW49038	**CF107**	LW60287	**CF411**
LW21793	**CF203**	LW25141	**CF065**	LW31539	**CF043**	LW49039	**CF545**	LW60288	**CF606**
LW21796	**CF010**	LW25142	**CF066**	LW31540	**CF042**	LW49040	**CF327**	LW60289	**CF604**
LW21797	**CF530**	LW25145	**CF072**	LW31541	**CF043**	LW50000	**CF185**	LW60291	**CF211**
LW21815	**CF486**	LW25146	**CF073**	LW31542	**CF042**	LW50001	**CF727**	LW60292	**CF269**
LW21828	**CF111**	LW25153	**CF061**	LW31746	**CF043**	LW50002	**CF152**	LW60293	**CF398**
LW21829	**CF110**	LW25154	**CF062**	LW31747	**CF042**	LW50003	**CF009**	LW60294	**CF399**
LW21831	**CF006**	LW26504	**CF179**	LW31770	**CF140**	LW50004	**CF155**	LW60295	**CF299**
LW21832	**CF082**	LW26505	**CF178**	LW31771	**CF245**	LW50005	**CF394**	LW60296	**CF298**
LW21839	**CF103**	LW26506	**CF180**	LW31841	**CF250**	LW50006	**CF008**	LW60298	**CF467**
LW21850	**CF108**	LW30003	**CF134**	LW33049	**CF261**	LW50007	**CF154**	LW60299	**CF468**
LW21857	**CF112**	LW30005	**CF159**	LW33476	**CF335**	LW50008	**CF074**	LW60300	**CF465**
LW21858	**CF113**	LW30006	**CF360**	LW34185	**CF224**	LW50009	**CF153**	LW60301	**CF466**
LW21859	**CF059**	LW30007	**CF161**	LW34374	**CF418**	LW50010	**CF233**	LW60302	**CF413**
LW21867	**CF016**	LW30014	**CF429**	LW34536	**CF371**	LW50029	**CF264**	LW60303	**CF644**
LW21868	**CF017**	LW30015	**CF430**	LW34537	**CF372**	LW50030	**CF008**	LW60305	**CF458**
LW21868	**CF099**	LW30019	**CF369**	LW34597	**CF373**	LW50032	**CF008**	LW60306	**CF500**
LW21877	**CF045**	LW30029	**CF375**	LW35855	**CF417**	LW50033	**CF044**	LW60307	**CF473**
LW21897	**CF092**	LW30030	**CF376**	LW36020	**CF210**	LW50034	**CF044**	LW60310	**CF460**
LW21898	**CF093**	LW30037	**CF728**	LW36029	**CF136**	LW50040	**CF105**	LW60311	**CF226**
LW21899	**CF059**	LW30048	**CF095**	LW36030	**CF097**	LW50045	**CF342**	LW60312	**CF457**
LW21900	**CF060**	LW30058	**CF160**	LW36031	**CF096**	LW50046	**CF343**	LW60313	**CF456**
LW21903	**CF014**	LW30059	**CF158**	LW36165	**CF085**	LW50047	**CF339**	LW60314	**CF459**
LW21904	**CF015**	LW30072	**CF277**	LW36166	**CF095**	LW50065	**CF931**	LW60316	**CF361**
LW21905	**CF128**	LW30073	**CF278**	LW36167	**CF075**	LW50078	**CF952**	LW60317	**CF598**
LW21906	**CF129**	LW30074	**CF157**	LW37337	**CF127**	LW50082	**CF320**	LW60318	**CF493**
LW21907	**CF069**	LW30077	**CF614**	LW37493	**CF359**	LW50084	**CF677**	LW60319	**CF618**
LW21908	**CF081**	LW30084	**CF089**	LW37515	**CF007**	LW60002	**CF184**	LW60320	**CF488**
LW21927	**CF297**	LW30087	**CF717**	LW37521	**CF075**	LW60007	**CF709**	LW60321	**CF615**
LW21960	**CF100**	LW30088	**CF718**	LW37523	**CF085**	LW60011	**CF168**	LW60322	**CF492**
LW21961	**CF067**	LW30092	**CF445**	LW37523	**CF469**	LW60096	**CF363**	LW60323	**CF613**
LW21962	**CF135**	LW30093	**CF446**	LW37551	**CF196**	LW60097	**CF362**	LW60324	**CF452**
LW21980	**CF071**	LW30107	**CF030**	LW37871	**CF416**	LW60098	**CF363**	LW60325	**CF454**
LW21983	**CF109**	LW30111	**CF050**	LW38608	**CF374**	LW60103	**CF204**	LW60326	**CF453**
LW21990	**CF186**	LW30112	**CF051**	LW38676	**CF358**	LW60104	**CF406**	LW60327	**CF292**
LW22103	**CF246**	LW30115	**CF088**	LW38812	**CF442**	LW60105	**CF407**	LW60328	**CF286**
LW22104	**CF167**	LW30130	**CF282**	LW38928	**CF602**	LW60106	**CF197**	LW60329	**CF608**
LW22118	**CF122**	LW30155	**CF404**	LW38929	**CF385**	LW60107	**CF714**	LW60330	**CF620**

CROSS REFERENCES LIST

Ad. OE	FRITECH ref.
DELPHI	
LW60331	**CF205**
LW60333	**CF505**
LW60335	**CF623**
LW60340	**CF517**
LW60341	**CF546**
LW60345	**CF400**
LW60346	**CF508**
LW60347	**CF498**
LW60348	**CF497**
LW60349	**CF462**
LW60350	**CF464**
LW60351	**CF463**
LW60352	**CF499**
LW60354	**CF237**
LW60355	**CF621**
LW60357	**CF287**
LW60372	**CF289**
LW60373	**CF288**
LW60444	**CF309**
LW60445	**CF308**
LW60531	**CF234**
LW60532	**CF235**
LW60548	**CF566**
LW60550	**CF565**
LW60622	**CF291**
LW60623	**CF619**
LW60628	**CF617**
LW60629	**CF616**
LW60635	**CF464**
LW60636	**CF463**
LW60642	**CF472**
LW60643	**CF511**
LW60644	**CF506**
LW60645	**CF507**
LW60653	**CF494**
LW60654	**CF514**
LW60655	**CF174**
LW60656	**CF495**
LW60657	**CF503**
LW60658	**CF304**
LW60659	**CF512**
LW60660	**CF509**
LW60661	**CF490**
LW60662	**CF491**
LW60663	**CF431**
LW60666	**CF458**
LW60667	**CF769**
LW60668	**CF290**
LW60669	**CF557**
LW60670	**CF510**
LW60696	**CF548**
LW60697	**CF547**
LW60754	**CF506**
LW60809	**CF540**
LW60822	**CF521**
LW60831	**CF757**
LW60834	**CF242**
LW60835	**CF243**
LW60841	**CF502**
LW60869	**CF634**
LW60877	**CF635**
LW60878	**CF301**
LW61000	**CF307**
LW61001	**CF241**
LW61019	**CF302**
LW61025	**CF496**
LW61034	**CF242**
LW61035	**CF243**
LW61041	**CF562**
LW61042	**CF561**
LW61043	**CF567**
LW61063	**CF563**
LW61064	**CF538**
LW61065	**CF539**
LW61083	**CF563**
LW61115	**CF572**
LW61125	**CF313**
LW61156	**CF541**
LW61157	**CF542**
LW61165	**CF313**
LW61166	**CF314**
LW61282	**CF582**
LW61285	**CF303**
LW62013	**CF311**
LW62014	**CF312**
LW62015	**CF710**
LW62019	**CF513**
LW62020	**CF251**
LW62021	**CF247**
LW62022	**CF696**
LW62025	**CF249**
LW62026	**CF248**
LW62027	**CF646**
LW62028	**CF647**
LW62041	**CF562**
LW62046	**CF833**
LW62047	**CF982**
LW62048	**CF564**
LW62049	**CF701**
LW62050	**CF543**
LW62051	**CF544**
LW62053	**CF832**
LW62072	**CF321**
LW62073	**CF322**
LW62074	**CF775**
LW62075	**CF554**
LW62076	**CF555**
LW62080	**CF678**
LW62081	**CF550**
LW62084	**CF585**
LW62085	**CF586**
LW62086	**CF712**
LW62087	**CF711**
LW62088	**CF578**
LW62089	**CF313**
LW62091	**CF841**
LW62092	**CF840**
LW62093	**CF787**
LW62094	**CF579**
LW62095	**CF577**
LW62098	**CF789**
LW62099	**CF258**
LW62099	**CF979**
LW62100	**CF715**
LW62100	**CF694**
LW62101	**CF679**
LW62102	**CF824**
LW62103	**CF823**
LW62104	**CF988**
LW62105	**CF987**
LW62109	**CF556**
LW62110	**CF676**
LW62111	**CF553**
LW62112	**CF809**
LW62113	**CF810**
LW62115	**CF1005**
LW62116	**CF1006**
LW62117	**CF826**
LW62118	**CF515**
LW62119	**CF831**
LW62121	**CF780**
LW62122	**CF716**
LW62123	**CF438**
LW62124	**CF708**
LW62125	**CF707**
LW70003	**CF592**
LW70004	**CF595**
LW70005	**CF593**
LW70006	**CF002**
LW70011	**CF004**
LW70019	**CF259**
LW70021	**CF357**
LW70024	**CF351**
LW70025	**CF070**
LW70028	**CF347**
LW70029	**CF201**
LW70029	**CF068**
LW70035	**CF328**
LW70036	**CF354**
LW70037	**CF329**
LW70059	**CF195**
LW70064	**CF171**
LW70082	**CF079**
LW70083	**CF100**
LW70084	**CF101**
LW70085	**CF187**
LW70087	**CF170**
LW70088	**CF188**
LW70090	**CF590**
LW70091	**CF589**
LW70092	**CF591**
LW70093	**CF594**
LW70094	**CF487**
LW70095	**CF217**
LW70102	**CF330**
LW70103	**CF475**
LW70105	**CF478**
LW70106	**CF169**
LW70107	**CF293**
LW70108	**CF230**
LW70109	**CF333**
LW70110	**CF231**
LW70140	**CF305**
LW70144	**CF171**
LW70150	**CF232**
LW70151	**CF528**
LW70174	**CF331**
LW70175	**CF187**
LW70176	**CF332**
LW70178	**CF476**
LW70181	**CF479**
LW70182	**CF477**
LW70192	**CF141**
LW70226	**CF135**
LW70317	**CF315**
LW70330	**CF310**
LW70336	**CF306**
LW70338	**CF004**
LW70339	**CF130**
LW70340	**CF481**
LW70342	**CF004**
LW70343	**CF094**
LW80002	**CF268**
LW80014	**CF126**
LW80016	**CF240**
LW80017	**CF144**
LW80100	**CF138**
LW80101	**CF139**
LW80102	**CF150**
LW80104	**CF319**
LW80105	**CF581**
LW80106	**CF318**
LW80106	**CF856**
LW80107	**CF317**
LW80108	**CF142**
LW80109	**CF143**
LW80112	**CF316**
LW80113	**CF682**
LW80114	**CF325**
LW80115	**CF326**
LW80116	**CF149**
LW80117	**CF570**
LW80118	**CF571**
LW80119	**CF568**
LW80120	**CF569**
LW80122	**CF180**
LW80125	**CF552**
LW90001	**CF402**
LW90002	**CF929**
LW90005	**CF609**
LW90006	**CF610**
LW90007	**CF436**
LW90007	**CF437**
LW90008	**CF437**
LW90009	**CF588**
LW90010	**CF433**
LW90011	**CF722**
LW90012	**CF723**
LW90014	**CF783**
LW90015	**CF747**
LW90016	**CF748**
LW90017	**CF751**
LW90021	**CF695**
LW90041	**CF785**
LW90042	**CF814**
LW90044	**CF778**
LW90045	**CF801**
LW90047	**CF804**
LW90049	**CF074**
LW90050	**CF779**
LW90051	**CF802**
LW90052	**CF583**
LW90053	**CF790**
LW90054	**CF819**
LW90055	**CF820**
LW90056	**CF777**
LW90057	**CF808**
LW90058	**CF811**
LW90059	**CF803**
LW90061	**CF798**
LW90064	**CF580**
LW90065	**CF788**
LW90068	**CF580**
LW90069	**CF780**
LW90070	**CF791**
LW90071	**CF792**
LW90072	**CF808**
LW90073	**CF788**
LW90074	**CF821**
LW90075	**CF822**
LW90076	**CF827**
LW90077	**CF829**
LW90078	**CF849**
LW90079	**CF830**
LW90080	**CF836**
LW90081	**CF837**
LW90082	**CF847**
LW90083	**CF848**
LW90084	**CF253**
LW90085	**CF236**
LW90086	**CF850**
LW90087	**CF677**
LW90089	**CF867**
LW90090	**CF993**
LW90091	**CF858**
LW90092	**CF857**
LW90093	**CF853**
LW90094	**CF860**
LW90095	**CF970**
LW90096	**CF878**
LW90097	**CF969**
LW90098	**CF866**
LW90099	**CF865**
LW90102	**CF889**
LW90106	**CF855**
LW90107	**CF859**
LW90108	**CF854**
LW90109	**CF903**
LW90110	**CF864**
LW90111	**CF834**
LW90112	**CF862**
LW90113	**CF863**
LW90114	**CF983**
LW90115	**CF984**
LW90116	**CF986**
LW90116	**CF795**
LW90116	**CF872**
LW90117	**CF974**
LW90118	**CF869**
LW90119	**CF921**
LW90120	**CF909**
LW90121	**CF817**
LW90121	**CF877**
LW90121	**CF878**
LW90122	**CF992**
LW90123	**CF464**
LW90124	**CF985**
LW90125	**CF1025**
LW90126	**CF989**
LW90127	**CF996**
LW90128	**CF926**
LW90129	**CF816**
LW90129	**CF817**
LW90130	**CF999**
LW90132	**CF997**
LW90133	**CF995**
LW90134	**CF1001**
FTE	
BKR1006	**CT006**
BKR1007	**CT011**
BKR1008	**CT005**
BKR1009	**CT009**
BKR1011	**CT008**
BKR1082	**CT016**
FH190111	**PF011**
FH190610	**PF016**
FH190711	**PF016**
FH190911	**PF010**
FH190912	**PF046**
FH1990201	**PF045**
FH1990201	**PF073**
FH1990202	**PF474**
FH1990203	**PF073**
FH1990204	**PF015**
FH1990301	**PF072**
FH1990313	**PF047**
FH1990401	**PF003**
FH1990402	**PF044**
FH1990402	**PF003**
FH1990403	**PF044**
FH1990413	**PF044**
FH1990511	**PF013**
FH1990511	**PF004**
FH1990512	**PF074**
FH1990513	**PF013**
FH1990513	**PF014**
FH1990514	**PF050**
FH1990611	**PF047**
FH1990612	**PF051**
FH1990701	**PF015**
FH1990703	**PF068**
FK1940A1	**CZ005**
FR1540B1	**CF593**
FR1540C1	**CF351**
FR1740A1	**CF347**
FR1940D1	**CF002**
FR1940E1	**CF329**
FR1940F1	**CF590**
FR2240C1	**CF591**
FR2240D1	**CF589**
FR2243B1	**CF259**
FR2243B1	**CF357**
FR2243C1	**CF281**
FR2340B1	**CF595**
FR2340C1	**CF592**
FR2840D1	**CF594**
FR2840F1	**CF328**
H1585401	**PF063**
H1585402	**PF063**
H1585501	**PF064**
H1585502	**PF064**
H1785401	**PF156**
H1792701	**PF085**

Ad. OE	FRITECH ref.	Ad. OE	FRITECH ref.	Ad. OE	FRITECH ref.	Ad. OE	FRITECH ref.	Ad. OE	FRITECH ref.
FTE		H20903501	**PF179**	H20915471	**PF814**	H22912871	**PF239**	H23903621	**PF538**
		H20903901	**PF164**	H20915571	**PF643**	H22912971	**PF505**	H23903721	**PF641**
		H20904001	**PF162**	H20938121	**PF059**	H22913071	**PF323**	H23903971	**PF806**
H1908501	**PF056**	H20904206	**PF006**	H2093851	**PF058**	H22913471	**PF915**	H23904021	**PF983**
H1975601	**PF054**	H20904206	**PF033**	H2093853	**PF059**	H22913771	**PF791**	H23904121	**PF660**
H1976401	**PF055**	H20904206	**PF041**	H20939121	**PF293**	H22913871	**PF792**	H23904271	**PF659**
H1981101	**PF610**	H20904206	**PF231**	H2093951	**PF060**	H22914471	**PF793**	H23904331	**PF604**
H1986401	**PF155**	H20904207	**PF114**	H2094651	**PF059**	H22914571	**PF704**	H23904431	**PF500**
H1986501	**PF158**	H20904208	**PF006**	H2095105	**PF105**	H22914771	**PF793**	H23905071	**PF247**
H1986801	**PF157**	H20904221	**PF041**	H2097201	**PF022**	H2291500	**PF071**	H23906021	**PF247**
H1987701	**PF172**	H20904301	**PF161**	H2097501	**PF094**	H2292901	**PF116**	H23906371	**PF613**
H1987801	**PF220**	H20904302	**PF161**	H2097901	**PF171**	H2293301	**PF096**	H23906671	**PF650**
H1988001	**PF626**	H20904601	**PF038**	H2098602	**PF005**	H2293501	**PF123**	H23906771	**PF573**
H1988101	**PF610**	H20905001	**PF009**	H2098603	**PF005**	H2293801	**PF032**	H23906871	**PF527**
H1988201	**PF611**	H20905401	**PF193**	H2098605	**PF006**	H2293901	**PF150**	H23906971	**PF482**
H1988301	**PF654**	H20905501	**PF134**	H2098605	**PF007**	H2293902	**PF151**	H23907071	**PF557**
H1988881	**PF633**	H20905601	**PF035**	H2098605	**PF089**	H2294301	**PF062**	H23907171	**PF397**
H1988981	**PF653**	H20905701	**PF195**	H2098606	**PF006**	H2294701	**PF095**	H23907271	**PF601**
H1989081	**PF830**	H20905801	**PF131**	H2098621	**PF005**	H2294702	**PF146**	H23907471	**PF530**
H1989371	**PF831**	H20905801	**PF201**	H2098851	**PF178**	H2294805	**PF039**	H23907571	**PF858**
H1995501	**PF079**	H20905801	**PF211**	H2098901	**PF122**	H2294805	**PF248**	H23907631	**PF820**
H1996401	**PF020**	H20906201	**PF405**	H2099102	**PF177**	H2294808	**PF042**	H23907871	**PF642**
H1996601	**PF021**	H20906401	**PF975**	H2286731	**PF614**	H2294901	**PF031**	H23907971	**PF693**
H1997001	**PF139**	H20906701	**PF266**	H2286871	**PF615**	H2295500	**PF168**	H23908071	**PF531**
H1997002	**PF083**	H20906801	**PF213**	H2286931	**PF628**	H2295501	**PF168**	H23908171	**PF528**
H1997003	**PF082**	H20907001	**PF463**	H22900081	**PF462**	H2295601	**PF219**	H23908271	**PF812**
H1997401	**PF081**	H20907101	**PF329**	H22900181	**PF385**	H2296101	**PF434**	H23908371	**PF908**
H1997402	**PF080**	H20907201	**PF463**	H22900281	**PF260**	H2296201	**PF153**	H23908571	**PF585**
H1997501	**PF008**	H20907301	**PF025**	H22900381	**PF290**	H2296301	**PF154**	H23908671	**PF845**
H1997502	**PF169**	H20907601	**PF490**	H22900481	**PF257**	H2296501	**PF199**	H23908771	**PF861**
H1997521	**PF008**	H20907901	**PF242**	H22900501	**PF039**	H2296601	**PF198**	H23908871	**PF862**
H1997601	**PF001**	H20908001	**PF438**	H22900621	**PF281**	H2296901	**PF189**	H23908971	**PF847**
H1997701	**PF079**	H20908101	**PF437**	H22900831	**PF549**	H2297001	**PF214**	H23909171	**PF847**
H1997803	**PF087**	H20908201	**PF288**	H22900931	**PF274**	H2297201	**PF401**	H23909571	**PF838**
H1997803	**PF107**	H20908301	**PF436**	H22901031	**PF582**	H2297301	**PF221**	H23909771	**PF892**
H1997804	**PF087**	H20908401	**PF267**	H22901271	**PF625**	H2297401	**PF173**	H23912771	**PF884**
H1997804	**PF107**	H20908621	**PF025**	H22901331	**PF252**	H2297501	**PF180**	H23912871	**PF835**
H1997901	**PF292**	H20908721	**PF291**	H22901521	**PF532**	H2297501	**PF202**	H23912971	**PF873**
H1998411	**PF052**	H20908831	**PF273**	H22901621	**PF236**	H2297601	**PF494**	H23913071	**PF798**
H1998501	**PF053**	H20909421	**PF235**	H22901771	**PF543**	H2298101	**PF210**	H23913171	**PF854**
H1998502	**PF053**	H20909531	**PF381**	H22901931	**PF506**	H2298201	**PF207**	H23913271	**PF855**
H1998711	**PF017**	H20909631	**PF380**	H22902031	**PF507**	H2298301	**PF282**	H23913371	**PF801**
H1998712	**PF018**	H20909731	**PF508**	H22902331	**PF533**	H2298701	**PF197**	H23913671	**PF715**
H1998901	**PF053**	H20909831	**PF623**	H22902431	**PF535**	H2298801	**PF196**	H23913871	**PF857**
H1999101	**PF034**	H20909931	**PF624**	H22902571	**PF647**	H2298901	**PF144**	H23913971	**PF850**
H1999201	**PF200**	H20910121	**PF320**	H22902571	**PF869**	H2299601	**PF269**	H23914071	**PF910**
H1999801	**PF227**	H20910431	**PF463**	H22902671	**PF646**	H2299701	**PF287**	H23914171	**PF987**
H1999831	**PF661**	H20910431	**PF973**	H22902671	**PF870**	H2299801	**PF239**	H23914271	**PF528**
H2079100	**PF133**	H20910531	**PF329**	H22902771	**PF658**	H2299801	**PF240**	H23932121	**PF040**
H2087001	**PF283**	H20911021	**PF544**	H22902871	**PF800**	H2299901	**PF243**	H2393400	**PF638**
H2087181	**PF595**	H20911121	**PF545**	H22902931	**PF827**	H2385201	**PF124**	H2394401	**PF152**
H2087281	**PF596**	H20911221	**PF546**	H22903031	**PF542**	H2386771	**PF802**	H2394501	**PF142**
H2087331	**PF284**	H20911321	**PF185**	H22903321	**PF481**	H23900181	**PF241**	H2395401	**PF147**
H2087431	**PF804**	H20911421	**PF339**	H22903421	**PF186**	H23900281	**PF644**	H2395801	**PF222**
H2087571	**PF833**	H20911571	**PF586**	H22903571	**PF587**	H23900381	**PF429**	H2395901	**PF215**
H2087631	**PF832**	H20911621	**PF246**	H22903671	**PF374**	H23900481	**PF464**	H2396201	**PF148**
H20900301	**PF160**	H20911821	**PF553**	H22903821	**PF188**	H23900581	**PF285**	H2396301	**PF036**
H20900401	**PF061**	H20911921	**PF552**	H22904631	**PF310**	H23900681	**PF312**	H2396302	**PF036**
H20900701	**PF109**	H20912371	**PF617**	H22904971	**PF444**	H23900781	**PF311**	H2396401	**PF037**
H20900702	**PF166**	H20912421	**PF449**	H22905071	**PF444**	H23900881	**PF280**	H2396501	**PF043**
H20900801	**PF110**	H20912521	**PF449**	H22905171	**PF448**	H23900901	**PF609**	H2396701	**PF234**
H20901001	**PF057**	H20912621	**PF452**	H22905271	**PF448**	H23901001	**PF493**	H2396901	**PF304**
H20901101	**PF093**	H20912721	**PF452**	H22905321	**PF448**	H23901101	**PF383**	H2397001	**PF548**
H20901201	**PF076**	H20912821	**PF449**	H22905421	**PF444**	H23901201	**PF799**	H2397301	**PF811**
H20901401	**PF078**	H20913371	**PF443**	H22905771	**PF583**	H23901301	**PF480**	H2397501	**PF276**
H20901501	**PF077**	H20913471	**PF442**	H22905971	**PF264**	H23901401	**PF560**	H2397601	**PF223**
H20901701	**PF159**	H20913571	**PF002**	H22906071	**PF263**	H23901821	**PF811**	H2397801	**PF209**
H20901801	**PF084**	H20913671	**PF024**	H22906171	**PF540**	H23902021	**PF458**	H2397901	**PF206**
H20902001	**PF121**	H20913771	**PF729**	H22906271	**PF539**	H23902231	**PF499**	H2398001	**PF308**
H20902101	**PF179**	H20914071	**PF322**	H22906371	**PF232**	H23902331	**PF275**	H2398002	**PF308**
H20902201	**PF294**	H20914171	**PF979**	H22906471	**PF700**	H23902431	**PF551**	H2398101	**PF398**
H20902301	**PF115**	H20914271	**PF980**	H22906571	**PF699**	H23902731	**PF634**	H2398201	**PF218**
H20902501	**PF167**	H20914571	**PF978**	H22906671	**PF700**	H23902831	**PF537**	H2398301	**PF192**
H20902601	**PF165**	H20914871	**PF846**	H22906771	**PF699**	H23902971	**PF798**	H2398401	**PF217**
H20902701	**PF163**	H20914971	**PF816**	H22912271	**PF590**	H23903071	**PF798**	H2398501	**PF191**
H20903101	**PF162**	H20915071	**PF817**	H22912371	**PF589**	H23903071	**PF803**	H2398601	**PF523**
H20903201	**PF164**	H20915171	**PF853**	H22912471	**PF599**	H23903271	**PF636**	H2398701	**PF305**
H20903401	**PF170**	H20915271	**PF944**	H22912771	**PF524**	H23903531	**PF638**	H2398801	**PF253**

CROSS REFERENCES LIST

Ad. OE	FRITECH ref.	Ad. OE	FRITECH ref.	Ad. OE	FRITECH ref.	Ad. OE	FRITECH ref.	Ad. OE	FRITECH ref.
FTE		H2599131	**PF828**	KG19006403	**PZ102**	KN22069A1	**CZ052**	R17015A1	**CF350**
		H2599131	**PF829**	KG19006611	**PZ005**	KN22069A1	**CZ097**	R17016B1	**CF358**
		H2599331	**PF513**	KG19007001	**PZ062**	KN2207642	**CZ118**	R17017B1	**CF601**
H2398901	**PF309**	H2599631	**PF640**	KG19007701	**PZ080**	KN2208341	**CZ083**	R17018B1	**CF008**
H2399001	**PF265**	H2599731	**PF639**	KG19007701	**PZ102**	KN2209071	**CZ119**	R17018D1	**CF008**
H2399101	**PF271**	H2599931	**PF629**	KG190077412	**PZ080**	KN2209171	**CZ116**	R17018E1	**CF008**
H2399201	**PF394**	H2680471	**PF976**	KG190077412	**PZ102**	KN23017A1	**CZ016**	R17019B1	**CF356**
H2399301	**PF268**	H2680571	**PF992**	KG19007801	**PZ076**	KN23021E1	**CZ025**	R17020A1	**CF014**
H2399401	**PF286**	H269001	**PF137**	KG19007801	**PZ106**	KN23021E1	**CZ093**	R17021A1	**CF015**
H2399501	**PF043**	H26900231	**PF879**	KG19008001	**PZ085**	KN23026B1	**CZ088**	R17022A1	**CF023**
H2399601	**PF244**	H2691321	**PF465**	KG19008001	**PZ105**	KN23027C1	**CZ026**	R17023A1	**CF024**
H2399701	**PF245**	H2691471	**PF960**	KG19009201	**PZ034**	KN23027C1	**CZ081**	R17024B1	**CF153**
H2399801	**PF390**	H2691871	**PF982**	KG19009501	**PZ118**	KN2309D1	**CZ018**	R17025A1	**CF006**
H2399981	**PF272**	H2691971	**PF724**	KG19009601	**PZ119**	KN2391A1	**CZ018**	R17027B1	**CF155**
H2500671	**PF801**	H2692071	**PF876**	KG19013921	**PZ070**	KN2396B1	**CZ016**	R1702871	**CF009**
H2579283	**PF027**	H2692271	**PF876**	KG19014021	**PZ032**	KN2398B1	**CZ017**	R17028B1	**CF009**
H2585971	**PF890**	H2801101	**PF136**	KG19014471	**PZ037**	KN25039A1	**CZ008**	R17028C1	**CF009**
H25900131	**PF907**	H2892021	**PF238**	KG1905511	**PZ022**	KN25040A1	**CZ009**	R17029A1	**CF239**
H25900231	**PF635**	H2892671	**PF511**	KG1907513	**PZ020**	KN25047A1	**CZ023**	R17030A1	**CF071**
H25900671	**PF867**	H3103801	**PF135**	KG1907814	**PZ020**	KN25048A1	**CZ023**	R17031A1	**CF079**
H25900871	**PF877**	H330101	**PF140**	KG1908415	**PZ050**	KN25048A1	**CZ024**	R17032A1	**CF201**
H25900971	**PF878**	KG15000131	**PZ066**	KG1909714	**PZ023**	KN28010A1	**CZ019**	R17032A1	**CF068**
H25901171	**PF897**	KG15000421	**PZ039**	KG1909714	**PZ113**	KN38014A1	**CZ012**	R17034A1	**CF785**
H25901471	**PF255**	KG15000521	**PZ038**	KG1909716	**PZ023**	KN3809K1	**CZ006**	R17035A1	**CF131**
H25901571	**PF898**	KG15001041	**PZ148**	KG1909716	**PZ113**	R14011B1	**CF044**	R17036A1	**CF856**
H25901671	**PF988**	KG15001171	**PZ151**	KG19700111	**PZ013**	R14011D1	**CF044**	R17037A1	**CF163**
H25902071	**PF527**	KG15001471	**PZ073**	KG19700301	**PZ024**	R14012B1	**CF105**	R17042A1	**CF256**
H25902171	**PF874**	KG15004571	**PZ153**	KG25000901	**PZ019**	R14013A1	**CF532**	R17043A1	**CF161**
H25902271	**PF875**	KG1501111	**PZ150**	KG310501	**PZ001**	R1408B1	**CF001**	R1704481	**CF168**
H25902971	**PF515**	KG1501114	**PZ094**	KG310601	**PZ018**	R1408C1	**CF001**	R1704581	**CF570**
H25903071	**PF823**	KG1501114	**PZ108**	KG310701	**PZ093**	R1408J1	**CF001**	R1704681	**CF571**
H25903171	**PF824**	KG1501302	**PZ098**	KG310711	**PZ147**	R15013B1	**CF080**	R1704721	**CF236**
H25903271	**PF875**	KG1501502	**PZ149**	KN1501071	**CZ117**	R15013G1	**CF080**	R1704721	**CF825**
H25903371	**PF874**	KG1501904	**PZ095**	KN19011A1	**CZ007**	R1501671	**CF166**	R1705621	**CF215**
H2591201	**PF289**	KG1501904	**PZ109**	KN1901741	**CZ077**	R15016A1	**CF166**	R1705721	**CF214**
H2591501	**PF326**	KG1502101	**PZ078**	KN1901741	**CZ099**	R15016B1	**CF166**	R1705821	**CF585**
H2592101	**PF029**	KG1502101	**PZ103**	KN1901744	**CZ077**	R15017A1	**CF003**	R1705921	**CF586**
H2592201	**PF230**	KG1502102	**PZ079**	KN1901744	**CZ099**	R15017B1	**CF003**	R1706021	**CF806**
H2592901	**PF810**	KG1502102	**PZ104**	KN19017B1	**CZ077**	R15025A1	**CF070**	R1706121	**CF807**
H2593101	**PF208**	KG1502104	**PZ097**	KN19017B1	**CZ099**	R15026A1	**CF725**	R1706221	**CF580**
H2593201	**PF205**	KG1503201	**PZ064**	KN1901841	**CZ086**	R15027A1	**CF100**	R1706321	**CF788**
H2593401	**PF204**	KG1503201	**PZ107**	KN1901841	**CZ098**	R15029A1	**CF082**	R1706421	**CF091**
H2593601	**PF608**	KG1503604	**PZ117**	KN1901842	**CZ098**	R1502P1	**CF267**	R1706521	**CF678**
H2593701	**PF593**	KG1503701	**PZ077**	KN19018B1	**CZ086**	R15030A1	**CF289**	R1706671	**CF307**
H2593901	**PF208**	KG1503741	**PZ077**	KN19018B1	**CZ098**	R15031A1	**CF288**	R1706771	**CF241**
H2593901	**PF209**	KG1504004	**PZ115**	KN19020A1	**CZ103**	R15032A1	**CF209**	R1706821	**CF236**
H2594001	**PF254**	KG1504005	**PZ116**	KN19020B1	**CZ103**	R15033A1	**CF677**	R1706821	**CF969**
H2594181	**PF492**	KG1504006	**PZ114**	KN19021A1	**CZ104**	R1503421	**CF174**	R1706931	**CF258**
H2594281	**PF277**	KG1504047	**PZ116**	KN1902743	**CZ120**	R1503521	**CF402**	R1707031	**CF258**
H2594381	**PF109**	KG1504501	**PZ151**	KN1903041	**CZ076**	R1503821	**CF710**	R1707121	**CF563**
H2594481	**PF526**	KG1505541	**PZ146**	KN1903141	**CZ080**	R1503921	**CF709**	R1707221	**CF553**
H2594581	**PF547**	KG1506701	**PZ099**	KN1904621	**CZ128**	R1504031	**CF715**	R1707331	**CF802**
H2594681	**PF522**	KG1506848	**PZ145**	KN1905371	**CZ010**	R1504031	**CF694**	R1708471	**CF852**
H2594801	**PF600**	KG1508821	**PZ068**	KN1905471	**CZ123**	R1504121	**CF619**	R1708531	**CF544**
H2594901	**PF822**	KG1509621	**PZ071**	KN1905871	**CZ130**	R1504121	**CF302**	R1708631	**CF543**
H2595001	**PF393**	KG1509721	**PZ072**	KN1907371	**CZ131**	R1504221	**CF619**	R1708731	**CF971**
H2595101	**PF541**	KG1509821	**PZ090**	KN1907471	**CZ124**	R1504471	**CF302**	R1708871	**CF985**
H2595201	**PF821**	KG1509921	**PZ065**	KN20012C1	**CZ027**	R1504571	**CF620**	R1708971	**CF862**
H2595332	**PF574**	KG1900017	**PZ022**	KN20012C1	**CZ095**	R1504771	**CF291**	R1709071	**CF999**
H25953331	**PF574**	KG19001311	**PZ016**	KN2004471	**CZ071**	R1504971	**CF930**	R1709171	**CF1000**
H2595431	**PF558**	KG19002201	**PZ023**	KN2004571	**CZ122**	R1505171	**CF889**	R17107A1	**CF417**
H2595432	**PF558**	KG19002201	**PZ113**	KN2004671	**CZ125**	R1505271	**CF855**	R17108A1	**CF261**
H2595601	**PF627**	KG19003611	**PZ081**	KN2004771	**CZ125**	R1505371	**CF859**	R179171	**CF283**
H2595731	**PF503**	KG19003611	**PZ101**	KN2005371	**CZ132**	R159071	**CF483**	R1791C1	**CF340**
H2595831	**PF521**	KG19003612	**PZ030**	KN2097B1	**CZ013**	R1590A1	**CF483**	R1791D1	**CF283**
H2595921	**PF580**	KG19004406	**PZ091**	KN22031B1	**CZ051**	R1593A1	**CF264**	R1791J1	**CF283**
H2596131	**PF502**	KG19004407	**PZ092**	KN22045B1	**CZ036**	R1598A1	**CF365**	R1795A1	**CF194**
H2596231	**PF826**	KG19004449	**PZ091**	KN2205031	**CZ048**	R1599A1	**CF339**	R1796A1	**CF484**
H2596331	**PF534**	KG19005011	**PZ029**	KN2205032	**CZ048**	R1599C1	**CF339**	R1798A1	**CF612**
H2596431	**PF620**	KG19005011	**PZ100**	KN22056D1	**CZ053**	R17010A1	**CF007**	R19000121	**CF313**
H2596531	**PF622**	KG19005401	**PZ075**	KN22057B1	**CZ112**	R17010D1	**CF007**	R19000221	**CF314**
H2596631	**PF621**	KG19005602	**PZ082**	KN22061A1	**CZ085**	R17010D1	**CF786**	R19000321	**CF581**
H2596731	**PF656**	KG19005821	**PZ061**	KN2206231	**CZ073**	R17010F1	**CF358**	R19000421	**CF552**
H2596831	**PF657**	KG190062010	**PZ130**	KN2206232	**CZ073**	R1701171	**CF000**	R19000571	**CF780**
H2596931	**PF520**	KG19006207	**PZ087**	KN2206233	**CZ073**	R17011B1	**CF000**	R190006A2	**CF683**
H2598021	**PF149**	KG19006209	**PZ096**	KN22063A1	**CZ121**	R17011C1	**CF000**	R19000721	**CF928**
H2598771	**PF278**	KG19006209	**PZ110**	KN22066A1	**CZ074**	R17011K1	**CF000**	R19000821	**CF550**
H2598971	**PF594**	KG19006403	**PZ080**	KN22066A1	**CZ096**	R17014A1	**CF349**	R19001331	**CF811**

Ad. OE	FRITECH ref.	Ad. OE	FRITECH ref.	Ad. OE	FRITECH ref.	Ad. OE	FRITECH ref.	Ad. OE	FRITECH ref.
FTE		R19057B1	**CF053**	R2000A1	**CF043**	R20060A1	**CF043**	R22011471	**CF554**
		R19059B1	**CF074**	R20010071	**CF197**	R20061A1	**CF042**	R22011571	**CF555**
		R19061A1	**CF101**	R20010471	**CF551**	R20062A1	**CF096**	R22025A1	**CF337**
R19001731	**CF808**	R19062A1	**CF077**	R20010671	**CF439**	R20065A1	**CF135**	R22026A1	**CF587**
R19001821	**CF464**	R19063A1	**CF078**	R20010A1	**CF426**	R20066A1	**CF175**	R22032A1	**CF489**
R19001921	**CF463**	R19064A1	**CF083**	R20011B1	**CF018**	R20067A1	**CF179**	R2203H1	**CF170**
R19002231	**CF808**	R19065A1	**CF084**	R20012A1	**CF388**	R20068A1	**CF222**	R22040A1	**CF367**
R19002331	**CF249**	R19066A1	**CF077**	R20013A1	**CF104**	R20069A1	**CF223**	R22042A1	**CF010**
R19002431	**CF248**	R19067A1	**CF078**	R20014A1	**CF530**	R20070A1	**CF090**	R22042B1	**CF010**
R19002571	**CF708**	R19068A1	**CF045**	R2001571	**CF232**	R20071A1	**CF067**	R22044B1	**CF120**
R19002671	**CF707**	R19070A1	**CF094**	R20015A1	**CF232**	R20072A1	**CF160**	R22044B1	**CF603**
R19002731	**CF438**	R19071A1	**CF092**	R20015B1	**CF232**	R20073A1	**CF133**	R22045A1	**CF364**
R19002821	**CF573**	R19072A1	**CF093**	R20016A1	**CF041**	R20074A1	**CF059**	R22046A1	**CF265**
R19002921	**CF235**	R19073A1	**CF109**	R20018A1	**CF200**	R20075A1	**CF060**	R2205071	**CF257**
R19003021	**CF234**	R19074A1	**CF140**	R20019A1	**CF202**	R2009871	**CF644**	R22053A1	**CF087**
R19003121	**CF269**	R19075A1	**CF102**	R20020A1	**CF048**	R2009971	**CF503**	R22054A1	**CF086**
R19003271	**CF798**	R19079A1	**CF121**	R20020B1	**CF048**	R20110A1	**CF386**	R22059A1	**CF199**
R19003321	**CF826**	R19082A1	**CF185**	R20021A1	**CF049**	R20111A1	**CF387**	R22060A1	**CF055**
R19003571	**CF841**	R19083A1	**CF240**	R20021B1	**CF049**	R20113A1	**CF369**	R22061A1	**CF389**
R19003671	**CF840**	R19085A1	**CF779**	R20022A1	**CF523**	R2092A1	**CF011**	R22062A1	**CF390**
R19003721	**CF572**	R19086A1	**CF319**	R20024B1	**CF127**	R2093A1	**CF085**	R22063A1	**CF012**
R19003821	**CF074**	R19087A1	**CF126**	R20025A1	**CF042**	R2093D1	**CF076**	R22064A1	**CF013**
R19004171	**CF811**	R19088A1	**CF124**	R20026A1	**CF043**	R2093E1	**CF085**	R22065A1	**CF611**
R19004271	**CF515**	R19089A1	**CF317**	R20027A1	**CF063**	R2093G1	**CF085**	R22066A1	**CF612**
R19004371	**CF710**	R1908F1	**CF263**	R20027B1	**CF063**	R2097A1	**CF030**	R22067A1	**CF036**
R19004471	**CF709**	R19094A1	**CF142**	R20028A1	**CF064**	R2098B1	**CF027**	R22068A1	**CF039**
R19010071	**CF505**	R19095A1	**CF143**	R20028B1	**CF064**	R2099B1	**CF123**	R22069A1	**CF040**
R19010171	**CF775**	R1909681	**CF144**	R20029A1	**CF046**	R220001A1	**CF297**	R22070A1	**CF056**
R19010371	**CF207**	R1909781	**CF253**	R20029B1	**CF046**	R220002A1	**CF065**	R22073B1	**CF031**
R19010471	**CF206**	R1909881	**CF252**	R20030A1	**CF047**	R220002B1	**CF065**	R22074A1	**CF391**
R19010671	**CF783**	R19099A1	**CF682**	R20030B1	**CF047**	R220003A1	**CF066**	R22075A1	**CF392**
R19010871	**CF457**	R19111B1	**CF192**	R20031A1	**CF025**	R220003B1	**CF032**	R220771	**CF173**
R19010871	**CF938**	R19114A1	**CF335**	R20032A1	**CF026**	R220003B1	**CF066**	R22078A1	**CF020**
R19010971	**CF456**	R1998A1	**CF156**	R20033A1	**CF025**	R220004A1	**CF097**	R22078B1	**CF020**
R19011471	**CF784**	R200001A1	**CF320**	R20033B1	**CF025**	R220005A1	**CF245**	R22078C1	**CF020**
R19011571	**CF212**	R200002A1	**CF695**	R20034A1	**CF026**	R220006A1	**CF089**	R22079A1	**CF037**
R19011671	**CF213**	R200004A1	**CF159**	R20034B1	**CF026**	R220007A1	**CF136**	R2207L1	**CF173**
R19011971	**CF492**	R200005A1	**CF141**	R20035A1	**CF025**	R220008A1	**CF219**	R22080A1	**CF038**
R19012071	**CF493**	R200006A1	**CF043**	R20036A1	**CF026**	R220009A1	**CF450**	R22081B1	**CF125**
R19012271	**CF849**	R200007A1	**CF042**	R20037A1	**CF048**	R220010A1	**CF451**	R22082A1	**CF533**
R19012471	**CF853**	R200008A1	**CF145**	R20038A1	**CF049**	R220011A1	**CF178**	R22083A1	**CF017**
R19016A1	**CF054**	R200009A1	**CF146**	R20039A1	**CF043**	R220012A1	**CF306**	R22084A1	**CF016**
R19025A1	**CF338**	R200010A1	**CF147**	R20040A1	**CF042**	R220013A1	**CF186**	R22085D1	**CF095**
R19028B1	**CF208**	R200011A1	**CF148**	R20040B1	**CF042**	R220014A1	**CF436**	R22085E1	**CF095**
R19030A1	**CF382**	R200012A1	**CF122**	R20041A1	**CF043**	R220015A1	**CF437**	R22086A1	**CF089**
R19031A1	**CF075**	R200013A1	**CF162**	R20042A1	**CF042**	R220016A1	**CF130**	R22087A1	**CF199**
R19031C1	**CF196**	R200013A1	**CF520**	R20043A1	**CF127**	R220017A1	**CF116**	R22088A1	**CF199**
R19031E1	**CF196**	R200014A1	**CF151**	R20043A1	**CF149**	R220019A1	**CF158**	R22089A1	**CF524**
R19031F1	**CF075**	R20002581	**CF629**	R20044A1	**CF171**	R22001A1	**CF537**	R22090A1	**CF525**
R19031F1	**CF311**	R20002621	**CF327**	R20045A1	**CF242**	R220020A1	**CF132**	R22094A1	**CF021**
R19031F1	**CF312**	R20002731	**CF827**	R20046A1	**CF243**	R220024A1	**CF316**	R22095A1	**CF022**
R19031F1	**CF721**	R20002831	**CF827**	R20047A1	**CF242**	R220025A1	**CF138**	R22096A1	**CF106**
R19033A1	**CF233**	R20002831	**CF839**	R20048A1	**CF243**	R220026A1	**CF139**	R22096C1	**CF106**
R19033D1	**CF233**	R20002831	**CF804**	R20049A1	**CF025**	R22002781	**CF134**	R22098A1	**CF032**
R19033E1	**CF233**	R20002921	**CF801**	R20049B1	**CF025**	R22002881	**CF568**	R22099A1	**CF033**
R19035A1	**CF352**	R20003321	**CF833**	R20050A1	**CF026**	R22002981	**CF569**	R221223B1	**CF420**
R19035B1	**CF352**	R20003431	**CF777**	R20050B1	**CF026**	R22003021	**CF150**	R22123B1	**CF414**
R19035C1	**CF394**	R20003531	**CF820**	R20051B1	**CF167**	R22003121	**CF308**	R22124B1	**CF415**
R19035D1	**CF352**	R20003631	**CF819**	R20052A	**CF164**	R22003231	**CF778**	R2293F1	**CF193**
R19035D1	**CF394**	R20003721	**CF824**	R20052A1	**CF164**	R22003331	**CF255**	R23012A1	**CF019**
R19038C1	**CF107**	R20003821	**CF823**	R20053A	**CF165**	R22003421	**CF723**	R23013A1	**CF117**
R19041A1	**CF670**	R20003921	**CF712**	R20053A1	**CF165**	R22003521	**CF722**	R23014A1	**CF118**
R19042B1	**CF383**	R20004021	**CF711**	R20054A1	**CF061**	R22003621	**CF962**	R23015A1	**CF115**
R19043B1	**CF355**	R20004171	**CF646**	R20054A1	**CF072**	R22003931	**CF829**	R23016A1	**CF114**
R19045D1	**CF152**	R20004271	**CF647**	R20055A1	**CF062**	R22004321	**CF830**	R23017A1	**CF366**
R19049A1	**CF486**	R20004321	**CF578**	R20055A1	**CF073**	R22004421	**CF795**	R23019A1	**CF342**
R19050A1	**CF088**	R20004421	**CF577**	R20056A1	**CF061**	R22004521	**CF510**	R23020A1	**CF343**
R19051A1	**CF050**	R20004531	**CF790**	R20056B1	**CF026**	R22004521	**CF582**	R23021B1	**CF225**
R19051B1	**CF050**	R20005231	**CF127**	R20056B1	**CF061**	R22004621	**CF247**	R2302371	**CF584**
R19052A1	**CF051**	R20005231	**CF149**	R20057A1	**CF062**	R22004721	**CF847**	R2302372	**CF560**
R19052B1	**CF051**	R20005471	**CF850**	R20057B1	**CF025**	R22004821	**CF848**	R23023A1	**CF584**
R19053A1	**CF268**	R20005571	**CF867**	R20057B1	**CF062**	R22004921	**CF309**	R23023B1	**CF560**
R19054A1	**CF004**	R20005671	**CF817**	R20058A1	**CF072**	R22005571	**CF829**	R23023G1	**CF560**
R19054A1	**CF216**	R20005771	**CF860**	R20058B1	**CF026**	R22005571	**CF854**	R23024A1	**CF057**
R19055B1	**CF154**	R20005771	**CF861**	R20058B1	**CF072**	R22010071	**CF290**	R23025A1	**CF058**
R19056A1	**CF052**	R20005871	**CF860**	R20059A1	**CF073**	R22010171	**CF287**	R23026A1	**CF366**
R19056B1	**CF052**	R20005871	**CF861**	R20059B1	**CF025**	R22010471	**CF458**	R23027A1	**CF275**
R19057A1	**CF053**	R20005971	**CF903**	R20059B1	**CF073**	R22010771	**CF934**	R23028A1	**CF274**

CROSS REFERENCES LIST

Ad. OE	FRITECH ref.
FTE	
R23029A1	**CF172**
R23030A1	**CF536**
R2303121	**CF176**
R23031A1	**CF176**
R23033A1	**CF284**
R23034A1	**CF285**
R23035A1	**CF184**
R2303681	**CF325**
R2303781	**CF326**
R2303821	**CF609**
R2303921	**CF610**
R2304021	**CF931**
R2304521	**CF310**
R2304621	**CF557**
R2304721	**CF803**
R2304821	**CF541**
R2304921	**CF542**
R2305471	**CF494**
R2305471	**CF957**
R2305571	**CF945**
R2305971	**CF936**
R2306071	**CF226**
R2306771	**CF983**
R2306871	**CF984**
R2306A1	**CF058**
R2307A1	**CF057**
R2393A1	**CF300**
R2396B1	**CF172**
R25028A1	**CF198**
R2502H1	**CF169**
R25034A1	**CF228**
R25034B1	**CF229**
R250371	**CF238**
R25038A1	**CF529**
R25039A1	**CF157**
R25039B1	**CF250**
R2503K1	**CF238**
R2504421	**CF177**
R25044A1	**CF177**
R25046A1	**CF220**
R25047A1	**CF221**
R25048A1	**CF180**
R25049A1	**CF429**
R25050A1	**CF430**
R25051A1	**CF181**
R2505221	**CF958**
R2505521	**CF932**
R2505921	**CF696**
R2506021	**CF757**
R2506571	**CF751**
R2506971	**CF188**
R26010B1	**CF545**
R26012A1	**CF231**
R2601321	**CF778**
R2601421	**CF941**
R2701A1	**CF210**
R2702A1	**CF182**
R28013H1	**CF528**
R28023A1	**CF381**
R28023B1	**CF381**
R28024B1	**CF203**
R28032A1	**CF448**
R28033A1	**CF447**
R28048A1	**CF183**
R2804921	**CF960**
R300221	**CF961**
R30102A1	**CF449**
R30102B1	**CF449**
R31021A1	**CF535**
R31025C1	**CF482**
R340171	**CF266**
R3401E1	**CF266**
R3401G1	**CF266**
R3401L1	**CF266**
R3401T1	**CF266**

Ad. OE	FRITECH ref.
R44015A1	**CF534**
TRW	
BWA100	**CF341**
BWA103	**CF105**
BWA104	**CF607**
BWA106	**CF613**
BWA108	**CF001**
BWA108A	**CF532**
BWA109	**CF044**
BWA112	**CF374**
BWA113	**CF442**
BWA114	**CF613**
BWA115	**CF518**
BWA129	**CF161**
BWA130	**CF318**
BWA130	**CF856**
BWA133	**CF988**
BWA134	**CF987**
BWA135	**CF324**
BWA137	**CF679**
BWA138	**CF678**
BWA146	**CF781**
BWA147	**CF095**
BWA149	**CF781**
BWA152	**CF319**
BWA154	**CF580**
BWA155	**CF788**
BWA156	**CF980**
BWA157	**CF816**
BWA157	**CF817**
BWA160	**CF997**
BWA161	**CF252**
BWA161	**CF253**
BWA162	**CF252**
BWA162	**CF253**
BWB101	**CF593**
BWB102	**CF003**
BWB103	**CF082**
BWB104	**CF100**
BWB105	**CF267**
BWB107	**CF339**
BWB108	**CF166**
BWB110	**CF351**
BWB111	**CF080**
BWB111A	**CF725**
BWB112	**CF070**
BWB113	**CF377**
BWB115	**CF483**
BWB116	**CF264**
BWB118	**CF365**
BWB120	**CF452**
BWB123	**CF598**
BWB128	**CF501**
BWB129	**CF413**
BWB130	**CF174**
BWB132	**CF635**
BWB133	**CF289**
BWB134	**CF288**
BWB135	**CF521**
BWB136	**CF620**
BWB138	**CF634**
BWB139	**CF174**
BWB141	**CF416**
BWB143	**CF728**
BWB144	**CF395**
BWB145	**CF396**
BWB147	**CF302**
BWB147	**CF889**
BWB149	**CF424**
BWB150	**CF209**
BWB168	**CF709**
BWB169	**CF710**
BWB170	**CF677**
BWB171	**CF715**

Ad. OE	FRITECH ref.
BWB174	**CF715**
BWB174	**CF694**
BWB175	**CF855**
BWB176	**CF859**
BWB708	**CF258**
BWB709	**CF677**
BWC100	**CF283**
BWC104	**CF262**
BWC105	**CF163**
BWC106	**CF344**
BWC107	**CF000**
BWC107A	**CF239**
BWC110	**CF349**
BWC111	**CF350**
BWC112	**CF008**
BWC114	**CF153**
BWC115	**CF009**
BWC116	**CF155**
BWC117	**CF484**
BWC120	**CF194**
BWC124	**CF410**
BWC125	**CF361**
BWC127	**CF488**
BWC128	**CF615**
BWC129	**CF454**
BWC130	**CF522**
BWC134	**CF301**
BWC135	**CF621**
BWC136	**CF286**
BWC137	**CF517**
BWC138	**CF502**
BWC140	**CF514**
BWC142	**CF241**
BWC143	**CF307**
BWC147	**CF023**
BWC148	**CF024**
BWC149	**CF601**
BWC150	**CF347**
BWC151	**CF014**
BWC152	**CF015**
BWC153	**CF201**
BWC153	**CF068**
BWC154	**CF356**
BWC155	**CF006**
BWC156	**CF079**
BWC157	**CF071**
BWC158	**CF111**
BWC159	**CF110**
BWC161	**CF129**
BWC162	**CF128**
BWC164	**CF091**
BWC167	**CF400**
BWC168	**CF401**
BWC171	**CF408**
BWC172	**CF409**
BWC172	**CF461**
BWC173	**CF271**
BWC174	**CF403**
BWC175	**CF204**
BWC176	**CF502**
BWC176	**CF522**
BWC178	**CF215**
BWC179	**CF214**
BWC180	**CF540**
BWC184	**CF218**
BWC184	**CF227**
BWC186	**CF236**
BWC187	**CF168**
BWC188	**CF358**
BWC189	**CF007**
BWC189	**CF786**
BWC190	**CF261**
BWC194	**CF224**
BWC195	**CF358**
BWC197	**CF404**
BWC198	**CF362**
BWC199	**CF417**
BWC200	**CF359**

Ad. OE	FRITECH ref.
BWC205	**CF563**
BWC209	**CF218**
BWC212	**CF380**
BWC214	**CF507**
BWC220	**CF806**
BWC221	**CF807**
BWC222	**CF236**
BWC222	**CF969**
BWC223	**CF543**
BWC224	**CF544**
BWC225	**CF506**
BWC227	**CF131**
BWC229	**CF832**
BWC230	**CF564**
BWC236	**CF971**
BWC237	**CF852**
BWC238	**CF648**
BWC239	**CF636**
BWC240	**CF130**
BWC243	**CF256**
BWC244	**CF553**
BWC245	**CF585**
BWC246	**CF586**
BWC248	**CF570**
BWC251	**CF678**
BWC252	**CF802**
BWC254	**CF985**
BWC256	**CF788**
BWC257	**CF586**
BWC258	**CF971**
BWC264	**CF969**
BWC267	**CF814**
BWC269	**CF863**
BWC275	**CF862**
BWC276	**CF1000**
BWC277	**CF999**
BWC278	**CF1013**
BWD101	**CF196**
BWD103	**CF002**
BWD104	**CF329**
BWD105	**CF590**
BWD106	**CF383**
BWD107	**CF352**
BWD108	**CF394**
BWD109	**CF670**
BWD110	**CF004**
BWD111	**CF152**
BWD112	**CF233**
BWD113	**CF107**
BWD113A	**CF121**
BWD114	**CF052**
BWD115	**CF053**
BWD116	**CF486**
BWD118	**CF154**
BWD119	**CF074**
BWD119A	**CF185**
BWD120	**CF268**
BWD121	**CF094**
BWD122	**CF109**
BWD123	**CF077**
BWD124	**CF078**
BWD126	**CF045**
BWD127	**CF240**
BWD128	**CF101**
BWD129	**CF083**
BWD130	**CF084**
BWD131	**CF092**
BWD132	**CF093**
BWD133	**CF077**
BWD134	**CF078**
BWD135	**CF102**
BWD136	**CF112**
BWD137	**CF113**
BWD138	**CF246**
BWD139	**CF292**
BWD140	**CF291**
BWD141	**CF572**
BWD144	**CF192**

Ad. OE	FRITECH ref.
BWD147	**CF335**
BWD148	**CF371**
BWD149	**CF372**
BWD156	**CF196**
BWD162	**CF263**
BWD163	**CF382**
BWD167	**CF156**
BWD169	**CF054**
BWD170	**CF338**
BWD171	**CF487**
BWD175	**CF378**
BWD178	**CF360**
BWD180	**CF355**
BWD181	**CF050**
BWD182	**CF051**
BWD183	**CF088**
BWD184	**CF440**
BWD185	**CF441**
BWD188	**CF235**
BWD189	**CF234**
BWD193	**CF208**
BWD194	**CF191**
BWD195	**CF075**
BWD195	**CF721**
BWD197	**CF345**
BWD200	**CF500**
BWD201	**CF379**
BWD205	**CF600**
BWD207	**CF618**
BWD210	**CF273**
BWD211	**CF269**
BWD212	**CF740**
BWD216	**CF332**
BWD217	**CF206**
BWD218	**CF207**
BWD220	**CF435**
BWD221	**CF622**
BWD222	**CF516**
BWD225	**CF519**
BWD226	**CF211**
BWD227	**CF213**
BWD228	**CF212**
BWD229	**CF206**
BWD230	**CF207**
BWD234	**CF505**
BWD235	**CF453**
BWD237	**CF493**
BWD238	**CF492**
BWD239	**CF457**
BWD240	**CF456**
BWD245	**CF497**
BWD246	**CF463**
BWD247	**CF464**
BWD248	**CF212**
BWD249	**CF373**
BWD260	**CF140**
BWD263	**CF499**
BWD264	**CF462**
BWD265	**CF498**
BWD266	**CF314**
BWD267	**CF313**
BWD268	**CF126**
BWD270	**CF249**
BWD271	**CF248**
BWD283	**CF216**
BWD284	**CF583**
BWD285	**CF991**
BWD286	**CF990**
BWD287	**CF252**
BWD288	**CF253**
BWD289	**CF004**
BWD290	**CF213**
BWD291	**CF317**
BWD292	**CF311**
BWD293	**CF312**
BWD294	**CF841**
BWD295	**CF840**
BWD296	**CF573**

Ad. OE	FRITECH ref.	Ad. OE	FRITECH ref.	Ad. OE	FRITECH ref.	Ad. OE	FRITECH ref.	Ad. OE	FRITECH ref.
TRW		BWF135	**CF027**	BWF272	**CF646**	BWH133	**CF612**	BWH288	**CF465**
		BWF136	**CF018**	BWF273	**CF647**	BWH134	**CF012**	BWH289	**CF466**
		BWF137	**CF179**	BWF278	**CF135**	BWH135	**CF013**	BWH290	**CF512**
BWD297	**CF701**	BWF139	**CF200**	BWF279	**CF141**	BWH136	**CF039**	BWH291	**CF562**
BWD300	**CF142**	BWF142	**CF108**	BWF280	**CF145**	BWH137	**CF040**	BWH292	**CF561**
BWD301	**CF143**	BWF144	**CF195**	BWF281	**CF146**	BWH138	**CF055**	BWH295	**CF458**
BWD302	**CF682**	BWF145A	**CF127**	BWF282	**CF147**	BWH139	**CF270**	BWH296	**CF406**
BWD303	**CF144**	BWF146	**CF048**	BWF283	**CF148**	BWH140	**CF021**	BWH298	**CF251**
BWD304	**CF683**	BWF147	**CF049**	BWF286	**CF122**	BWH141	**CF022**	BWH300	**CF773**
BWD305	**CF684**	BWF148	**CF025**	BWF287	**CF043**	BWH142	**CF306**	BWH301	**CF812**
BWD306	**CF124**	BWF149	**CF026**	BWF288	**CF042**	BWH145	**CF106**	BWH302	**CF247**
BWD307T	**CF683**	BWF150	**CF171**	BWF290	**CF162**	BWH146	**CF089**	BWH305	**CF364**
BWD307T	**CF684**	BWF151	**CF025**	BWF291	**CF578**	BWH150	**CF603**	BWH309	**CF309**
BWD308	**CF707**	BWF152	**CF026**	BWF292	**CF577**	BWH151	**CF087**	BWH310	**CF557**
BWD309	**CF708**	BWF153	**CF046**	BWF295	**CF149**	BWH152	**CF086**	BWH311	**CF245**
BWD310	**CF438**	BWF154	**CF047**	BWF296	**CF629**	BWH153	**CF120**	BWH312	**CF308**
BWD311	**CF515**	BWF155	**CF049**	BWF297	**CF242**	BWH154	**CF489**	BWH319	**CF509**
BWD312	**CF552**	BWF156	**CF059**	BWF298	**CF243**	BWH158	**CF591**	BWH320	**CF533**
BWD313	**CF780**	BWF157	**CF060**	BWF299	**CF820**	BWH159	**CF259**	BWH343	**CF965**
BWD314	**CF581**	BWF158	**CF025**	BWF300	**CF819**	BWH160	**CF389**	BWH364	**CF830**
BWD315	**CF780**	BWF159	**CF026**	BWF302	**CF791**	BWH161	**CF390**	BWH373	**CF158**
BWD317	**CF004**	BWF160	**CF242**	BWF303	**CF135**	BWH162	**CF589**	BWH374	**CF316**
BWD318	**CF825**	BWF161	**CF243**	BWF305	**CF695**	BWH163	**CF031**	BWH375	**CF116**
BWD320	**CF004**	BWF162	**CF242**	BWF306	**CF085**	BWH164	**CF281**	BWH376	**CF132**
BWD323	**CF574**	BWF163	**CF243**	BWF307	**CF151**	BWH165	**CF391**	BWH377	**CF150**
BWD324	**CF576**	BWF164	**CF122**	BWF308	**CF520**	BWH166	**CF392**	BWH380	**CF582**
BWD325	**CF826**	BWF165	**CF167**	BWF309	**CF320**	BWH167	**CF056**	BWH381	**CF134**
BWD326	**CF094**	BWF166	**CF061**	BWF310	**CF327**	BWH168	**CF125**	BWH389	**CF554**
BWD327	**CF808**	BWF167	**CF062**	BWF311	**CF116**	BWH169	**CF020**	BWH390	**CF555**
BWD328	**CF836**	BWF168	**CF072**	BWF312	**CF777**	BWH170	**CF357**	BWH391	**CF138**
BWD329	**CF837**	BWF169	**CF073**	BWF314	**CF135**	BWH171	**CF037**	BWH392	**CF139**
BWD336	**CF811**	BWF170	**CF061**	BWF315	**CF067**	BWH172	**CF038**	BWH394	**CF255**
BWD337	**CF798**	BWF170	**CF072**	BWF317	**CF801**	BWH173	**CF017**	BWH395	**CF568**
BWD338	**CF779**	BWF171	**CF062**	BWF318	**CF839**	BWH174	**CF016**	BWH396	**CF569**
BWD340	**CF849**	BWF171	**CF073**	BWF319	**CF833**	BWH175	**CF010**	BWH397	**CF778**
BWD341	**CF464**	BWF172	**CF076**	BWF321	**CF827**	BWH178	**CF524**	BWH398	**CF778**
BWD342	**CF463**	BWF181	**CF399**	BWF322	**CF232**	BWH179	**CF525**	BWH399	**CF1002**
BWD347	**CF775**	BWF184	**CF011**	BWF323	**CF712**	BWH183	**CF069**	BWH400	**CF847**
BWD351	**CF869**	BWF187	**CF369**	BWF324	**CF711**	BWH184	**CF081**	BWH401	**CF848**
BWD355	**CF873**	BWF191	**CF096**	BWF326	**CF989**	BWH185	**CF305**	BWH402	**CF829**
BWD356	**CF904**	BWF193	**CF085**	BWF331	**CF827**	BWH186	**CF032**	BWH405	**CF821**
BWD357	**CF1003**	BWF195	**CF222**	BWF332	**CF827**	BWH187	**CF033**	BWH406	**CF822**
BWD358	**CF1005**	BWF196	**CF223**	BWF333	**CF792**	BWH188	**CF103**	BWH408	**CF830**
BWD359	**CF1006**	BWF197	**CF363**	BWF334	**CF791**	BWH191	**CF297**	BWH409	**CF854**
BWD362	**CF925**	BWF198	**CF346**	BWF335	**CF067**	BWH192	**CF186**	BWH411	**CF970**
BWD363	**CF1009**	BWF201	**CF398**	BWF336	**CF860**	BWH206	**CF265**	BWH415	**CF455**
BWD713	**CF981**	BWF204	**CF714**	BWF339	**CF982**	BWH210	**CF602**	BWH416	**CF437**
BWD720	**CF1011**	BWF205	**CF197**	BWF341	**CF816**	BWH211	**CF385**	BWH417	**CF436**
BWD728	**CF973**	BWF208	**CF623**	BWF343	**CF711**	BWH212	**CF367**	BWH420	**CF974**
BWD729	**CF972**	BWF209	**CF459**	BWF344	**CF956**	BWH213	**CF193**	BWH421	**CF975**
BWF100	**CF523**	BWF215	**CF606**	BWF345	**CF547**	BWH215	**CF587**	BWH423	**CF996**
BWF101	**CF025**	BWF216	**CF411**	BWF346	**CF548**	BWH222	**CF376**	BWH425	**CF854**
BWF102	**CF026**	BWF220	**CF604**	BWF348	**CF858**	BWH223	**CF375**	BWH426	**CF1004**
BWF103	**CF202**	BWF222	**CF412**	BWF349	**CF866**	BWH226	**CF089**	BWH427	**CF995**
BWF104	**CF386**	BWF226	**CF299**	BWF350	**CF867**	BWH227	**CF445**	BWH428	**CF1025**
BWF105	**CF387**	BWF227	**CF298**	BWF351	**CF857**	BWH228	**CF446**	BWH706	**CF817**
BWF106	**CF336**	BWF230	**CF473**	BWF352	**CF864**	BWH229	**CF282**	BWH706	**CF877**
BWF107	**CF334**	BWF232	**CF439**	BWF353	**CF903**	BWH231	**CF097**	BWK101	**CF366**
BWF108	**CF427**	BWF233	**CF299**	BWF354	**CF804**	BWH232	**CF136**	BWK103	**CF176**
BWF110	**CF348**	BWF234	**CF298**	BWF355	**CF921**	BWH235	**CF414**	BWK104	**CF117**
BWF111	**CF425**	BWF236	**CF496**	BWF356	**CF994**	BWH236	**CF415**	BWK105	**CF118**
BWF112	**CF133**	BWF238	**CF469**	BWF357	**CF909**	BWH237	**CF420**	BWK106	**CF019**
BWF113	**CF175**	BWF239	**CF470**	BWF358	**CF817**	BWH239	**CF397**	BWK107	**CF114**
BWF115	**CF426**	BWF240	**CF503**	BWF359	**CF1001**	BWH241	**CF095**	BWK108	**CF115**
BWF117	**CF104**	BWF241	**CF304**	BWF736	**CF503**	BWH247	**CF485**	BWK109	**CF592**
BWF118	**CF165**	BWF242	**CF508**	BWH106	**CF257**	BWH248	**CF294**	BWK110	**CF595**
BWF119	**CF164**	BWF245	**CF160**	BWH107	**CF178**	BWH253	**CF526**	BWK113	**CF172**
BWF122	**CF041**	BWF247	**CF472**	BWH109	**CF199**	BWH254	**CF527**	BWK114	**CF343**
BWF123	**CF063**	BWF247	**CF538**	BWH110	**CF199**	BWH255	**CF219**	BWK115	**CF342**
BWF124	**CF064**	BWF249	**CF539**	BWH111	**CF244**	BWH256	**CF450**	BWK116	**CF057**
BWF125	**CF043**	BWF250	**CF048**	BWH112	**CF098**	BWH257	**CF451**	BWK117	**CF058**
BWF126	**CF042**	BWF251	**CF030**	BWH113	**CF099**	BWH263	**CF431**	BWK119	**CF225**
BWF127	**CF043**	BWF252	**CF159**	BWH114	**CF065**	BWH266	**CF290**	BWK124	**CF300**
BWF128	**CF042**	BWF253	**CF130**	BWH115	**CF066**	BWH270	**CF205**	BWK129	**CF189**
BWF129	**CF043**	BWF254	**CF135**	BWH118	**CF337**	BWH277	**CF546**	BWK130	**CF190**
BWF130	**CF042**	BWF261	**CF067**	BWH120	**CF170**	BWH278	**CF565**	BWK131	**CF284**
BWF131	**CF076**	BWF262	**CF090**	BWH130	**CF036**	BWH279	**CF566**	BWK132	**CF285**
BWF132	**CF123**	BWF265	**CF530**	BWH132	**CF611**	BWH287	**CF287**	BWK140	**CF226**

CROSS REFERENCES LIST

Ad. OE	FRITECH ref.	Ad. OE	FRITECH ref.	Ad. OE	FRITECH ref.	Ad. OE	FRITECH ref.	Ad. OE	FRITECH ref.
TRW		GPV1031	**CT011**	PMA143	**PF442**	PMD361	**PF053**	PMF402	**PF022**
		GPV1059	**CT016**	PMA146	**PF442**	PMD397	**PF227**	PMF418	**PF025**
		GPV1078	**CT001**	PMA147	**PF443**	PMD398	**PF200**	PMF421	**PF442**
BWK146	**CF407**	GPV1079	**CT006**	PMA156	**PF815**	PMD414	**PF661**	PMF452	**PF955**
BWK152	**CF494**	GPV1086	**CT002**	PMA157	**PF815**	PMD731	**PF943**	PMF465	**PF710**
BWK153	**CF510**	GPV1091	**CT005**	PMA169	**PF905**	PMF103	**PF120**	PMF469	**PF266**
BWK154	**CF468**	GPV1092	**CT008**	PMA177	**PF586**	PMF110	**PF179**	PMF470	**PF195**
BWK155	**CF467**	GPV1096	**CT004**	PMA179	**PF587**	PMF119	**PF133**	PMF472	**PF729**
BWK156	**CF184**	GPV1114	**CT003**	PMA180	**PF374**	PMF124	**PF293**	PMF473	**PF270**
BWK160	**CF541**	GPV1180	**CT004**	PMA199	**PF042**	PMF125	**PF058**	PMF477	**PF211**
BWK161	**CF542**	PJA113	**CZ132**	PMA202	**PF185**	PMF125	**PF059**	PMF480	**PF033**
BWK162	**CF275**	PJA114	**CZ130**	PMA203	**PF287**	PMF126	**PF060**	PMF480	**PF041**
BWK163	**CF274**	PJA116	**CZ129**	PMA204	**PF311**	PMF131	**PF023**	PMF480	**PF231**
BWK180	**CF303**	PJD102	**CZ005**	PMA205	**PF312**	PMF140	**PF078**	PMF481	**PF490**
BWK181	**CF513**	PJD103	**CZ010**	PMA206	**PF527**	PMF142	**PF077**	PMF487	**PF006**
BWK218	**CF815**	PJD103	**CZ102**	PMC118	**PF085**	PMF143	**PF294**	PMF490	**PF213**
BWK223	**CF326**	PJD118	**CZ126**	PMC120	**PF127**	PMF144	**PF178**	PMF492	**PF193**
BWK224	**CF325**	PJD175	**CZ128**	PMC122	**PF128**	PMF146	**PF094**	PMF493	**PF267**
BWK228	**CF983**	PJD201	**CZ120**	PMC148	**PF475**	PMF148	**PF005**	PMF494	**PF242**
BWK229	**CF984**	PJD226	**CZ123**	PMD102	**PF087**	PMF148	**PF007**	PMF496	**PF006**
BWK751	**CF815**	PJD229	**CZ076**	PMD102	**PF107**	PMF148	**PF114**	PMF502	**PF630**
BWL105	**CF169**	PJD238	**CZ052**	PMD107	**PF056**	PMF152	**PF279**	PMF505	**PF130**
BWL111	**CF250**	PJD238	**CZ097**	PMD118	**PF055**	PMF153	**PF057**	PMF514	**PF449**
BWL112	**CF157**	PJD239	**CZ104**	PMD124	**PF010**	PMF156	**PF177**	PMF515	**PF449**
BWL115	**CF188**	PJD240	**CZ103**	PMD143	**PF015**	PMF157	**PF171**	PMF516	**PF449**
BWL116	**CF228**	PJD241	**CZ077**	PMD144	**PF004**	PMF158	**PF093**	PMF517	**PF452**
BWL116	**CF229**	PJD241	**CZ099**	PMD147	**PF072**	PMF159	**PF109**	PMF518	**PF452**
BWL117	**CF529**	PJD242	**CZ086**	PMD153	**PF292**	PMF160	**PF166**	PMF526	**PF508**
BWL118	**CF229**	PJD242	**CZ098**	PMD158	**PF068**	PMF161	**PF110**	PMF527	**PF536**
BWL120	**CF813**	PJD243	**CZ124**	PMD158	**PF474**	PMF162	**PF660**	PMF528	**PF235**
BWL121	**CF757**	PJD254	**CZ114**	PMD159	**PF013**	PMF164	**PF159**	PMF529	**PF380**
BWL124	**CF429**	PJD256	**CZ115**	PMD159	**PF014**	PMF165	**PF160**	PMF530	**PF436**
BWL125	**CF430**	PJD264	**CZ080**	PMD160	**PF050**	PMF167	**PF164**	PMF531	**PF437**
BWL141	**CF418**	PJF100	**CZ027**	PMD162	**PF047**	PMF169	**PF165**	PMF532	**PF288**
BWL143	**CF198**	PJF100	**CZ095**	PMD164	**PF087**	PMF170	**PF163**	PMF534	**PF463**
BWL157	**CF717**	PJF104	**CZ013**	PMD165	**PF001**	PMF173	**PF167**	PMF534	**PF623**
BWL165	**CF220**	PJF128	**CZ127**	PMD168	**PF017**	PMF174	**PF162**	PMF535	**PF624**
BWL166	**CF221**	PJF130	**CZ125**	PMD170	**PF019**	PMF175	**PF089**	PMF536	**PF381**
BWL186	**CF237**	PJF131	**CZ126**	PMD172	**PF021**	PMF177	**PF097**	PMF537	**PF816**
BWL195	**CF177**	PJF141	**CZ125**	PMD178	**PF004**	PMF178	**PF179**	PMF538	**PF817**
BWL196	**CF718**	PJF170	**CZ125**	PMD179	**PF083**	PMF179	**PF170**	PMF539	**PF970**
BWL201	**CF181**	PJF172	**CZ071**	PMD180	**PF053**	PMF180	**PF162**	PMF540	**PF936**
BWL203	**CF460**	PJF176	**CZ072**	PMD181	**PF018**	PMF181	**PF002**	PMF541	**PF320**
BWL204	**CF180**	PJF703	**CZ133**	PMD186	**PF079**	PMF182	**PF009**	PMF542	**PF322**
BWL206	**CF977**	PJH108	**CZ051**	PMD188	**PF008**	PMF185	**PF846**	PMF544	**PF458**
BWL207	**CF978**	PJH108	**CZ085**	PMD188	**PF169**	PMF188	**PF194**	PMF545	**PF249**
BWL268	**CF865**	PJH110	**CZ036**	PMD192	**PF008**	PMF190	**PF295**	PMF546	**PF250**
BWL287	**CF696**	PJH182	**CZ048**	PMD194	**PF047**	PMF191	**PF024**	PMF549	**PF438**
BWL291	**CF992**	PJH183	**CZ112**	PMD195	**PF018**	PMF193	**PF164**	PMF551	**PF291**
BWL704	**CF460**	PJH188	**CZ053**	PMD202	**PF359**	PMF195	**PF030**	PMF552	**PF198**
BWN100	**CF545**	PJH189	**CZ074**	PMD204	**PF015**	PMF196	**PF035**	PMF553	**PF437**
BWN101	**CF295**	PJH189	**CZ096**	PMD205	**PF118**	PMF201	**PF131**	PMF554	**PF436**
BWN102	**CF296**	PJH190	**CZ073**	PMD206	**PF143**	PMF201	**PF201**	PMF555	**PF329**
BWN103	**CF210**	PJH193	**CZ083**	PMD209	**PF048**	PMF202	**PF038**	PMF556	**PF546**
BWN116	**CF381**	PJH194	**CZ116**	PMD215	**PF052**	PMF203	**PF161**	PMF557	**PF544**
BWN118	**CF594**	PJH195	**CZ118**	PMD217	**PF141**	PMF204	**PF117**	PMF561	**PF980**
BWN119	**CF328**	PJH201	**CZ119**	PMD219	**PF132**	PMF208	**PF174**	PMF562	**PF978**
BWN128	**CF203**	PJH202	**CZ119**	PMD220	**PF075**	PMF209	**PF138**	PMF563	**PF979**
BWN129	**CF447**	PJK100	**CZ018**	PMD221	**PF074**	PMF226	**PF104**	PMF569	**PF853**
BWN130	**CF448**	PJK102	**CZ016**	PMD250	**PF011**	PMF227	**PF105**	PMF571	**PF539**
BWN132	**CF279**	PJK110	**CZ017**	PMD253	**PF045**	PMF228	**PF022**	PMF573	**PF617**
BWN133	**CF280**	PJK113	**CZ025**	PMD253	**PF073**	PMF234	**PF108**	PMF575	**PF229**
BWN155	**CF187**	PJK113	**CZ093**	PMD254	**PF044**	PMF236	**PF121**	PMF576	**PF592**
BWN156	**CF187**	PJK118	**CZ081**	PMD256	**PF016**	PMF237	**PF061**	PMF578	**PF598**
BWN158	**CF831**	PJK120	**CZ088**	PMD260	**PF054**	PMF239	**PF111**	PMF580	**PF553**
BWN174	**CF277**	PJK728	**CZ125**	PMD269	**PF034**	PMF240	**PF111**	PMF581	**PF552**
BWN175	**CF278**	PJL108	**CZ008**	PMD287	**PF080**	PMF271	**PF181**	PMF585	**PF463**
BWN240	**CF182**	PJL113	**CZ009**	PMD290	**PF081**	PMF295	**PF130**	PMF585	**PF973**
BWN243	**CF328**	PJL144	**CZ011**	PMD295	**PF082**	PMF343	**PF182**	PMF593	**PF490**
BWN245	**CF183**	PJL144	**CZ023**	PMD296	**PF139**	PMF361	**PF975**	PMF722	**PF902**
BWN350	**CF926**	PJL159	**CZ024**	PMD297	**PF020**	PMF364	**PF134**	PMF724	**PF643**
BWN523	**CF182**	PJL160	**CZ030**	PMD314	**PF087**	PMF365	**PF084**	PMF726	**PF944**
BWN706	**CF993**	PJL162	**CZ035**	PMD314	**PF107**	PMF366	**PF115**	PMH103	**PF175**
BWP100	**CF449**	PJL165	**CZ070**	PMD348	**PF044**	PMF367	**PF076**	PMH122	**PF116**
BWS703	**CF716**	PJN116	**CZ019**	PMD348	**PF003**	PMF368	**PF122**	PMH140	**PF156**
GPV1000	**CT010**	PMA105	**PF971**	PMD356	**PF051**	PMF389	**PF225**	PMH142	**PF123**
GPV1011	**CT009**	PMA107	**PF216**	PMD359	**PF052**	PMF394	**PF138**	PMH152	**PF071**
GPV1025	**CT012**	PMA142	**PF443**	PMD360	**PF053**	PMF395	**PF405**	PMH166	**PF096**

Ad. OE	FRITECH ref.	Ad. OE	FRITECH ref.	Ad. OE	FRITECH ref.	Ad. OE	FRITECH ref.	Ad. OE	FRITECH ref.
TRW		PMH664	**PF263**	PMK155	**PF142**	PMK614	**PF855**	PML382	**PF109**
		PMH665	**PF264**	PMK158	**PF148**	PMK615	**PF854**	PML384	**PF278**
		PMH666	**PF448**	PMK160	**PF176**	PMK618	**PF832**	PML389	**PF228**
PMH169	**PF031**	PMH667	**PF251**	PMK161	**PF147**	PMK619	**PF641**	PML390	**PF254**
PMH170	**PF151**	PMH668	**PF252**	PMK163	**PF892**	PMK620	**PF983**	PML394	**PF393**
PMH171	**PF032**	PMH670	**PF240**	PMK178	**PF090**	PMK625	**PF628**	PML398	**PF580**
PMH172	**PF095**	PMH671	**PF505**	PMK272	**PF990**	PMK627	**PF500**	PML399	**PF878**
PMH173	**PF098**	PMH672	**PF239**	PMK274	**PF220**	PMK628	**PF911**	PML400	**PF877**
PMH176	**PF146**	PMH673	**PF239**	PMK278	**PF036**	PMK645	**PF609**	PML403	**PF898**
PMH177	**PF039**	PMH675	**PF804**	PMK279	**PF037**	PMK650	**PF613**	PML404	**PF898**
PMH177A	**PF248**	PMH677	**PF571**	PMK283	**PF262**	PMK653	**PF659**	PML404	**PF988**
PMH178	**PF168**	PMH679	**PF274**	PMK312	**PF276**	PMK654	**PF573**	PML405	**PF867**
PMH179	**PF219**	PMH682	**PF542**	PMK314	**PF223**	PMK655	**PF601**	PML407	**PF801**
PMH180	**PF214**	PMH682	**PF841**	PMK321	**PF611**	PMK656	**PF516**	PML420	**PF534**
PMH182	**PF173**	PMH683	**PF281**	PMK322	**PF610**	PMK658	**PF313**	PML421	**PF594**
PMH183	**PF091**	PMH684	**PF236**	PMK367	**PF838**	PMK659	**PF530**	PML422	**PF907**
PMH189	**PF172**	PMH685	**PF525**	PMK372	**PF519**	PMK660	**PF504**	PML424	**PF204**
PMH214	**PF119**	PMH686	**PF532**	PMK422	**PF512**	PMK661	**PF548**	PML425	**PF620**
PMH230	**PF062**	PMH687	**PF042**	PMK451	**PF398**	PMK662	**PF551**	PML426	**PF621**
PMH234	**PF145**	PMH688	**PF284**	PMK461	**PF394**	PMK668	**PF573**	PML427	**PF622**
PMH324	**PF184**	PMH689	**PF899**	PMK462	**PF397**	PMK674	**PF528**	PML430	**PF521**
PMH328	**PF704**	PMH690	**PF462**	PMK464	**PF529**	PMK675	**PF803**	PML431	**PF822**
PMH367	**PF224**	PMH691	**PF262**	PMK466	**PF271**	PMK676	**PF693**	PML432	**PF629**
PMH369	**PF184**	PMH692	**PF310**	PMK467	**PF265**	PMK677	**PF244**	PML433	**PF656**
PMH389	**PF153**	PMH693	**PF290**	PMK469	**PF192**	PMK678	**PF715**	PML434	**PF657**
PMH390	**PF154**	PMH695	**PF543**	PMK470	**PF286**	PMK679	**PF464**	PML436	**PF520**
PMH391	**PF199**	PMH696	**PF186**	PMK474	**PF191**	PMK680	**PF858**	PML437	**PF527**
PMH423	**PF091**	PMH697	**PF582**	PMK479	**PF633**	PMK681	**PF847**	PML438	**PF526**
PMH423	**PF203**	PMH700	**PF791**	PMK480	**PF634**	PMK682	**PF529**	PML442	**PF558**
PMH425	**PF197**	PMH701	**PF792**	PMK481	**PF383**	PMK683	**PF847**	PML443	**PF574**
PMH449	**PF144**	PMH715	**PF481**	PMK482	**PF280**	PMK695	**PF895**	PML447	**PF833**
PMH452	**PF150**	PMH736	**PF905**	PMK485	**PF191**	PMK696	**PF924**	PML448	**PF826**
PMH457	**PF063**	PMH770	**PF905**	PMK491	**PF234**	PMK706	**PF942**	PML465	**PF653**
PMH458	**PF064**	PMH818	**PF851**	PMK492	**PF626**	PMK876	**PF798**	PML466	**PF620**
PMH493	**PF091**	PMH883	**PF991**	PMK495	**PF218**	PMK902	**PF873**	PML467	**PF621**
PMH540	**PF517**	PMH890	**PF793**	PMK496	**PF217**	PMK913	**PF596**	PML468	**PF622**
PMH554	**PF524**	PMH897	**PF972**	PMK497	**PF209**	PMK914	**PF595**	PML469	**PF522**
PMH566	**PF307**	PMH900	**PF791**	PMK498	**PF206**	PMK915	**PF831**	PML475	**PF513**
PMH569	**PF180**	PMH901	**PF792**	PMK499	**PF268**	PMK916	**PF802**	PML476	**PF874**
PMH569	**PF202**	PMH902	**PF989**	PMK500	**PF218**	PMK917	**PF644**	PML477	**PF875**
PMH570	**PF401**	PMH907	**PF533**	PMK500	**PF575**	PMK918	**PF825**	PML478	**PF600**
PMH571	**PF188**	PMH908	**PF535**	PMK501	**PF217**	PMK920	**PF850**	PML489	**PF821**
PMH584	**PF042**	PMH909	**PF827**	PMK504	**PF308**	PMK921	**PF606**	PML491	**PF941**
PMH585	**PF240**	PMH910	**PF603**	PMK505	**PF258**	PMK922	**PF714**	PML497	**PF890**
PMH588	**PF196**	PMH916	**PF190**	PMK507	**PF259**	PMK923	**PF530**	PML498	**PF812**
PMH591	**PF977**	PMH929	**PF938**	PMK525	**PF283**	PMK927	**PF819**	PML499	**PF910**
PMH592	**PF239**	PMH940	**PF625**	PMK526	**PF272**	PMK928	**PF806**	PML501	**PF941**
PMH592	**PF240**	PMH941	**PF870**	PMK528	**PF043**	PMK929	**PF845**	PML504	**PF829**
PMH597	**PF039**	PMH942	**PF647**	PMK531	**PF305**	PMK932	**PF862**	PML505	**PF522**
PMH599	**PF282**	PMH942	**PF869**	PMK536	**PF253**	PMK933	**PF908**	PML535	**PF640**
PMH600	**PF210**	PMH943	**PF646**	PMK537	**PF523**	PMK935	**PF835**	PMN144	**PF838**
PMH601	**PF207**	PMH944	**PF233**	PMK546	**PF285**	PMK942	**PF398**	PMN204	**PF982**
PMH602	**PF269**	PMH945	**PF232**	PMK557	**PF798**	PMK943	**PF397**	PMN205	**PF876**
PMH604	**PF243**	PMH946	**PF186**	PMK560	**PF309**	PMK944	**PF394**	PMN212	**PF976**
PMH605	**PF207**	PMH947	**PF700**	PMK561	**PF253**	PML103	**PF654**	PMN213	**PF879**
PMH606	**PF210**	PMH948	**PF699**	PMK564	**PF304**	PML119	**PF326**	PMN214	**PF992**
PMH607	**PF042**	PMH949	**PF542**	PMK574	**PF820**	PML129	**PF149**	PMN225	**PF724**
PMH608	**PF836**	PMH950	**PF184**	PMK575	**PF557**	PML172	**PF492**	PMN232	**PF960**
PMH609	**PF904**	PMH951	**PF582**	PMK579	**PF614**	PML173	**PF655**	PMZ727	**PF519**
PMH610	**PF260**	PMH952	**PF658**	PMK580	**PF615**	PML178	**PF426**	PMZ730	**PF632**
PMH612	**PF487**	PMH953	**PF221**	PMK582	**PF650**	PML208	**PF256**	PNA104	**PZ150**
PMH614	**PF189**	PMH955	**PF494**	PMK583	**PF835**	PML216	**PF289**	PNA107	**PZ149**
PMH616	**PF240**	PMH956	**PF549**	PMK586	**PF480**	PML239	**PF327**	PNA109	**PZ076**
PMH617	**PF212**	PMH958	**PF645**	PMK588	**PF951**	PML244	**PF255**	PNA109	**PZ106**
PMH617	**PF226**	PMH959	**PF584**	PMK592	**PF560**	PML271	**PF157**	PNA110	**PZ085**
PMH622	**PF091**	PMH960	**PF590**	PMK593	**PF636**	PML272	**PF155**	PNA110	**PZ105**
PMH631	**PF448**	PMH962	**PF599**	PMK596	**PF537**	PML335	**PF639**	PNB240	**PZ065**
PMH632	**PF444**	PMH963	**PF589**	PMK597	**PF638**	PML359	**PF653**	PNB241	**PZ066**
PMH633	**PF444**	PMH970	**PF915**	PMK598	**PF585**	PML360	**PF277**	PNB335	**PZ151**
PMH635	**PF448**	PMH972	**PF870**	PMK599	**PF503**	PML363	**PF593**	PNB369	**PZ151**
PMH636	**PF448**	PMH976	**PF307**	PMK600	**PF502**	PML364	**PF608**	PNB445	**PZ146**
PMH646	**PF098**	PMK103	**PF222**	PMK601	**PF241**	PML365	**PF230**	PNB456	**PZ064**
PMH652	**PF257**	PMK113	**PF124**	PMK602	**PF247**	PML367	**PF627**	PNB456	**PZ107**
PMH653	**PF434**	PMK116	**PF158**	PMK603	**PF479**	PML370	**PF208**	PNB467	**PZ078**
PMH656	**PF583**	PMK117	**PF043**	PMK604	**PF482**	PML371	**PF205**	PNB467	**PZ103**
PMH658	**PF240**	PMK119	**PF215**	PMK605	**PF429**	PML372	**PF205**	PNB469	**PZ117**
PMH659	**PF506**	PMK137	**PF040**	PMK606	**PF464**	PML373	**PF208**	PNB471	**PZ077**
PMH660	**PF507**	PMK153	**PF152**	PMK609	**PF390**	PML376	**PF216**	PNB473	**PZ099**

CROSS REFERENCES LIST

Ad. OE	FRITECH ref.	Ad. OE	FRITECH ref.	Ad. OE	FRITECH ref.	Ad. OE	FRITECH ref.	Ad. OE	FRITECH ref.
TRW									
PNB476	**PZ039**								
PNB477	**PZ068**								
PNB479	**PZ038**								
PNB480	**PZ079**								
PNB480	**PZ104**								
PNB494	**PZ154**								
PNB501	**PZ152**								
PNB540	**PZ095**								
PNB540	**PZ109**								
PNB541	**PZ098**								
PNB542	**PZ094**								
PNB542	**PZ108**								
PNB543	**PZ090**								
PNB544	**PZ072**								
PNB545	**PZ071**								
PNB550	**PZ097**								
PNB556	**PZ073**								
PNB604	**PZ145**								
PNB640	**PZ098**								
PNB643	**PZ148**								
PNB655	**PZ153**								
PNB757	**PZ066**								
PND111	**PZ020**								
PND112	**PZ050**								
PND113	**PZ024**								
PND118	**PZ029**								
PND118	**PZ100**								
PND121	**PZ010**								
PND121	**PZ014**								
PND122	**PZ023**								
PND122	**PZ113**								
PND132	**PZ013**								
PND133	**PZ020**								
PND148	**PZ004**								
PND150	**PZ015**								
PND154	**PZ022**								
PND160	**PZ016**								
PND161	**PZ025**								
PND163	**PZ081**								
PND163	**PZ101**								
PND164	**PZ061**								
PND188	**PZ030**								
PND190	**PZ082**								
PND194	**PZ075**								
PND199	**PZ062**								
PND201	**PZ060**								
PND213	**PZ118**								
PND215	**PZ119**								
PND216	**PZ080**								
PND216	**PZ102**								
PND217	**PZ080**								
PND217	**PZ102**								
PND218	**PZ092**								
PND219	**PZ034**								
PND220	**PZ130**								
PND222	**PZ096**								
PND222	**PZ110**								
PND223	**PZ087**								
PND226	**PZ033**								
PND229	**PZ032**								
PND236	**PZ091**								
PND237	**PZ037**								
PND246	**PZ070**								
PND287	**PZ091**								
PND295	**PZ130**								

FRITECH ref.	Ø mm	ALU	PLA	CRCI	Marca - Make	Pagina Page
	Cilindretto Freno - Wheel Cylinder					
CF000	17,46				Audi, Seat, Volkswagen, Volkswagen Lcv	14-21, 44, 431-433, 436-439, 446-447, 487-497, 504-509, 511-513, 521-524, 527-528, 531-534, 536-538, 542
CF001	14,29				Volkswagen, Volkswagen Lcv, Audi	16-20, 43-44, 487-493, 504-507, 511-513, 521-523, 531-534, 542
CF002	19,05				Seat, Fso, Zastava, Innocenti, Fiat, Autobianchi, Lada, Fiat Lcv	46, 116-119, 121, 152, 188, 206-207, 226-227, 428-429, 445-446, 554
CF003	15,00				Ford Europe, Ford Lcv	163, 179
CF004	19,05				Fiat, Fiat Lcv, Innocenti, Lancia, Seat, Autobianchi, Seat Lcv	46-47, 117-119, 123, 131-132, 136-139, 143-146, 152-154, 156-157, 206, 230-231, 233, 235, 436, 444-446, 450
CF006	17,46				Ford Lcv, Ford Europe	163, 179
CF007	17,78				Ford Lcv, Ford Europe, Hyundai, Reliant	158-160, 170, 173-174, 177-178, 204, 365-366
CF008	17,46				Opel, Opel Lcv	294-295, 304, 311-313, 325-326
CF009	17,46				Pontiac, Opel Lcv, Opel, Daewoo	111-112, 294-298, 304, 311-313, 322, 325, 364
CF010	22,00				Renault Lcv, Renault	398-402, 412
CF011	20,64				Renault, Renault Lcv	398-400, 402, 411-412
CF012	22,22				Renault Lcv, Citroën, Peugeot, Renault	94, 328, 346, 351-354, 372, 384-387, 401, 403-405, 407, 410, 412-414
CF013	22,22				Citroën, Renault Lcv, Renault, Peugeot	94, 328-329, 346, 351-354, 372, 384-387, 401-405, 407, 410, 412-414
CF014	17,46				Renault, Peugeot	346, 401
CF015	17,46				Renault, Peugeot	346, 401
CF016	22,00				Renault Lcv, Renault, Peugeot	346, 372, 384-387, 394-397, 401-405, 407, 410, 412-414
CF017	22,00				Renault, Renault Lcv, Peugeot	346, 372, 384-387, 394-397, 401, 403-404, 407, 410, 412-414
CF018	20,64				Peugeot, Citroën	94-95, 329
CF019	23,81				Peugeot	331, 339
CF020	22,00				Talbot, Renault, Citroën Lcv, Renault Lcv, Matra	103, 238, 371-372, 387-388, 410, 470-473
CF021	22,20				Renault, Renault Lcv	377, 394-397, 411
CF022	22,20				Renault Lcv, Renault	377, 394-397, 411
CF023	17,78				Renault Lcv, Renault	384, 401, 410
CF024	17,78				Renault Lcv, Renault	384, 401, 410
CF025	20,64			•	Renault Lcv, Renault, Citroën	100-101, 366-368, 384-385, 401, 406-407, 410
CF026	20,64			•	Renault, Citroën, Renault Lcv	100-101, 366-368, 384-385, 401, 406-407, 410
CF027	20,64				Talbot, Peugeot, Matra	238, 339-340, 469-473
CF030	20,64				Matra, Talbot, Peugeot	238, 339-340, 348-349, 469-473
CF031	22,00				Peugeot, Talbot, Citroën	94-95, 328-329, 471
CF032	22,00			•	Renault, Renault Lcv	393-397, 411
CF033	22,00			•	Renault Lcv, Renault	394-397, 411
CF036	22,00				Matra, Talbot, Peugeot	238, 331, 339, 470-471, 473
CF037	22,00				Renault	393, 397-398
CF038	22,00				Renault	393, 397-398
CF039	22,22				Renault	393, 397-398
CF040	22,22				Renault	393, 397-398
CF041	20,64				Bmw	51
CF042	20,64			•	Peugeot, Renault, Citroën, Renault Lcv	96-97, 100-101, 340-343, 366-368, 388-393, 403-407, 410-411, 414
CF043	20,64			•	Renault, Renault Lcv, Peugeot, Citroën	96-97, 100-101, 340-343, 366-368, 388-393, 403-407, 410-411, 414
CF044	14,28				Opel, Opel Lcv	304, 310-311, 325
CF045	19,05				Citroën	85-86
CF046	20,64			•	Peugeot Lcv, Peugeot	337, 348-349, 357
CF047	20,64			•	Peugeot, Peugeot Lcv	337, 348-349, 357
CF048	20,64			•	Peugeot	331, 346-347
CF049	20,64			•	Peugeot	331, 346-347

FRITECH ref.	Ø mm	ALU	PLA	CRCI	Marca - Make	Pagina Page
					Cilindretto Freno - Wheel Cylinder	
CF050	19,05			•	Peugeot Lcv, Peugeot	331-335, 357
CF051	19,05			•	Peugeot Lcv, Peugeot	331-335, 357
CF052	19,05			•	Peugeot, Peugeot Lcv	331-335, 357
CF053	19,05			•	Peugeot, Peugeot Lcv	331-335, 357
CF054	19,05				Renault Lcv, Renault	398-399, 411-412
CF055	22,22				Renault, Renault Lcv	399-402, 412
CF056	22,00				Talbot, Citroën, Peugeot	94-95, 328-329, 471
CF057	23,81				Renault Lcv, Renault	398-400, 402, 411-412
CF058	23,81				Renault, Renault Lcv	398-400, 402, 411-412
CF059	20,64				Renault Lcv	407, 413-414
CF060	20,64				Renault Lcv	407, 413-414
CF061	20,64			•	Citroën, Peugeot, Renault, Renault Lcv	92, 96-97, 100-101, 335-337, 339-343, 388-393, 410-411
CF062	20,64			•	Peugeot, Renault, Renault Lcv, Citroën	92, 96-97, 100-101, 335-337, 339-343, 388-393, 410-411
CF063	20,64			•	Peugeot, Citroën	100-101, 346-347
CF064	20,64			•	Peugeot, Citroën	100-101, 346-347
CF065	22,00			•	Renault Lcv, Renault	393-397, 411
CF066	22,00			•	Renault, Renault Lcv	393-397, 411
CF067	20,64				Fiat, Fiat Lcv, Ford Europe, Lancia	120, 132-134, 154, 172, 234-235
CF068	17,46				Seat, Ford Lcv	180, 435-436, 444
CF069	22,00				Renault Lcv	407, 413
CF070	15,72				Fiat	121, 131-132
CF071	17,46				Ford Lcv, Ford Europe	163-164, 179
CF072	20,64			•	Renault Lcv, Renault	366-368, 403-407, 414, 417
CF073	20,64			•	Renault, Renault Lcv	366-368, 403-407, 414, 417
CF074	19,05				Opel, Opel Lcv, Daewoo, Chevrolet	79-80, 111-112, 295-298, 304-307, 312-314, 317-319, 322-323, 325-326
CF075	19,05				Ford Europe, Ford Lcv	158, 160, 162, 170-171, 173, 177-178
CF076	20,64				Volvo, Ford Europe, Ford Lcv, Hyundai, Daf Truck	113, 158-160, 178, 202, 548
CF077	19,05			•	Peugeot, Citroën	85-86, 94, 329-330
CF078	19,05			•	Citroën, Peugeot	85-86, 94, 329-330
CF079	17,50				Fiat Lcv, Fiat	139-142, 153
CF080	15,87				Volkswagen Lcv, Seat, Audi, Volkswagen	14, 16-20, 22, 43-44, 430-431, 487-488, 493-495, 508-509, 512-513, 521-523, 532, 542
CF081	22,00				Renault Lcv	407, 413
CF082	15,00				Ford Lcv, Ford Europe	163, 179
CF083	19,05			•	Citroën Lcv, Citroën, Peugeot	86, 94-95, 108, 329-330
CF084	19,05			•	Peugeot, Citroën Lcv, Citroën	86, 94-95, 108, 329-330
CF085	20,64				Ford Europe, Ford Lcv, Land Rover, Rover	158, 161-163, 166-167, 170-171, 174-177, 179, 238, 421-422
CF086	22,00				Renault	385-386
CF087	22,00				Renault	385-386
CF088	19,05				Peugeot	333, 335
CF089	22,20				Peugeot, Renault, Renault Lcv	352-355, 368, 371-372, 402, 407, 413-414
CF090	20,64				Fiat, Lancia, Fiat Lcv	128, 132-134, 153-154, 233-235
CF091	17,46				Rover	417, 423
CF092	19,05				Citroën, Renault Lcv, Renault	85, 391-393, 411
CF093	19,05				Renault Lcv, Citroën, Renault	85, 391-393, 411
CF094	19,05				Lancia, Fiat Lcv, Fiat, Peugeot, Citroën Lcv, Citroën, Peugeot Lcv	93-94, 105, 107-108, 143, 155-157, 236, 356, 360
CF095	22,20				Hyundai, Daewoo, Ford Lcv, Ssangyong, Mercury, Ford Europe	111-112, 160-167, 170-171, 173-174, 176-179, 204, 272, 463-464
CF096	20,64				Ford Europe	172-173
CF097	22,22				Ford Europe	172-173
CF098	22,00				Renault Lcv, Renault	403-405, 414
CF099	22,00				Renault, Renault Lcv	403-405, 414-415
CF100	15,00				Fiat	141-142
CF101	19,05				Lancia, Fiat	139-142, 230
CF102	19,05				Peugeot, Peugeot Lcv	329-331, 335-337, 357

FRITECH ref.	Ø mm	ALU	PLA	CRCI	Marca - Make	Pagina Page
					Cilindretto Freno - Wheel Cylinder	
CF1025*	22,20	•			Subaru, Toyota	465, 482
CF103	22,00				Citroën	95-96
CF104	20,64				Peugeot Lcv, Peugeot, Talbot	340-343, 346-347, 354-355, 357, 473
CF105	14,28				Opel, Opel Lcv	304, 311-312, 325
CF106	22,20				Bmw	51
CF107	19,05				Skoda, Audi, Seat, Volkswagen, Volkswagen Lcv	16, 20-21, 431-433, 437-439, 454-456, 491-495, 497-499, 506-507, 513, 521-525, 536-538, 542
CF108	20,64				Ford Europe	163
CF109	19,05				Ford Europe	163-164
CF110	17,46				Alfa Romeo	5-6, 8-9
CF111	17,46				Alfa Romeo	5-6, 8-9
CF112	19,05				Alfa Romeo	6-7, 9
CF113	19,05				Alfa Romeo	6-7, 9
CF114	23,80				Peugeot, Citroën	94, 328
CF115	23,80				Peugeot, Citroën	94, 328-329
CF116	22,00				Fiat, Fiat Lcv	122-123, 128, 134, 154
CF117	23,80				Peugeot	328-329
CF118	23,80				Peugeot	328-329
CF120	22,00				Renault, Renault Lcv	372, 385-386, 410
CF121	19,05	•			Volkswagen Lcv, Skoda Lcv, Volkswagen, Seat, Audi, Skoda	18, 20-21, 431-435, 437-442, 450-453, 455-456, 458-461, 487-488, 491-495, 497-499, 506-507, 513, 521-527, 530, 536-538, 542
CF122	20,64				Renault Lcv, Citroën, Renault	85-86, 405, 417
CF123	20,64				Volvo	547
CF124	19,05				Ford Europe	163-164
CF125	22,00				Renault Lcv, Renault	372, 387-388, 410, 415-416
CF126	19,05				Skoda	453-455
CF127	20,64	•			Volkswagen, Skoda, Seat Lcv, Audi, Volkswagen Lcv	15, 21, 449-450, 454-456, 513-514, 538-539
CF128	17,46				Alfa Romeo	5-9
CF129	17,46				Alfa Romeo	5-9
CF130	22,00				Lancia, Alfa Romeo, Fiat	1, 139-142, 230-231
CF131	17,46				Renault	377-382
CF132	22,00				Fiat, Lancia, Alfa Romeo	1, 122-123, 128, 231
CF133	20,64				Peugeot, Peugeot Lcv, Citroën	98-99, 101-102, 340-342, 344, 357
CF134	22,00				Citroën, Peugeot	98-99, 344
CF135	20,64				Fiat Lcv, Alfa Romeo, Fiat	1, 121, 129-131, 140-142, 153
CF136	22,22				Ford Europe	172-173
CF138	22,00	•			Nissan Lcv, Renault Lcv, Renault	289, 373-374, 407-408
CF139	22,00	•			Nissan Lcv, Renault Lcv, Renault	289, 373-374, 407-408
CF140	19,05				Renault	375
CF141	20,64				Fiat Lcv, Fiat	130, 152, 156
CF142	19,05			•	Peugeot, Peugeot Lcv	336, 357
CF143	19,05			•	Peugeot Lcv, Peugeot	336, 357
CF144	19,05				Renault, Renault Lcv, Dacia	109-110, 368-369, 377, 402, 405, 407
CF145	20,64			•	Peugeot	350-351
CF146	20,64			•	Peugeot	350-351
CF147	20,64				Peugeot	350-351
CF148	20,64				Peugeot	350-351
CF149	20,64				Skoda	455
CF150	22,22				Skoda	454
CF151	20,64	•			Fiat Lcv, Fiat	134-135, 155
CF152	19,05				Opel	295, 310-311, 313
CF153	17,46				Opel	295, 311, 313, 316
CF154	19,05				Opel, Opel Lcv	312-316, 323
CF155	17,46				Opel, Opel Lcv	313-314, 326
CF156	19,05				Bmw	50-51, 65-66
CF157	25,40				Peugeot Lcv, Fiat Lcv, Talbot, Citroën Lcv, Alfa Romeo Lcv, Renault Lcv	12, 104, 147-149, 360-361, 409, 470

FRITECH ref.	Ø mm	ALU	PLA	CRCI	Marca - Make	Pagina Page
					Cilindretto Freno - Wheel Cylinder	
CF158	22,00				Citroën, Peugeot Lcv, Citroën Lcv	86-87, 99-100, 102-103, 362-363
CF159	20,64				Citroën, Peugeot, Renault, Citroën Lcv	94-97, 100-101, 108, 330, 340-343, 375-376, 380-382, 402
CF160	20,64				Peugeot	349
CF161	17,78				Renault Lcv, Dacia, Renault	109-110, 368-370, 377, 402, 405, 407, 417
CF162	20,64	•			Citroën Lcv, Peugeot, Peugeot Lcv, Citroën	87-88, 94-97, 103, 108, 328, 330, 335-337, 340-343, 357
CF163	17,46				Daf Truck, Rover, Alfa Romeo Lcv, Ldv, Lotus, Iveco Truck, Ford Lcv	12-13, 113, 180, 215-216, 238, 426
CF164	20,64				Volvo	547-548
CF165	20,64				Volvo	547-548
CF166	15,87				Mercedes Benz Lcv	270
CF167	20,64				Volkswagen Lcv	543-545
CF168	17,78				Nissan	283
CF169	26,98				Iveco Truck	210-211, 221
CF170	22,22				Iveco Truck	210-211, 215, 220-221
CF171	20,64				Lada	226-229
CF172	23,81				Volkswagen Lcv	543, 547
CF173	22,20				Om (Carrelli Elevatori)	293
CF174	15,87	•			Nissan	280, 282, 286-287
CF175	20,33				Ford Lcv	182
CF176	23,81				Bmw	52-55
CF177	25,40				Mercedes Benz Lcv, Nissan	267, 281-282, 288
CF178	22,20				Nissan Lcv, Ford Lcv, Nissan	180, 183-184, 287, 291
CF179	20,64				Nissan, Nissan Lcv, Ford Lcv	180, 183-184, 287, 291
CF180	25,40				Nissan Lcv, Ford Lcv	180, 183-185, 288
CF181	25,40				Peugeot Lcv, Fiat Lcv, Citroën Lcv	105, 149-150, 358
CF182	27,00				Peugeot Lcv, Citroën Lcv, Fiat Lcv	105-106, 149-151, 358-359
CF183	28,60				Peugeot Lcv, Fiat Lcv, Citroën Lcv	105-106, 149-150, 358-359
CF184	23,81				Ford Europe, Nissan Lcv, Nissan	172, 286-287, 291
CF185	19,05	•			Opel, Opel Lcv	296-299, 303-307, 311-313, 317-320, 322-326
CF186	22,00				Ford Lcv, Ford Europe	163-164, 179
CF187	28,57				Iveco Truck	211-212
CF188	25,40				Iveco Truck, Iveco Bus	208, 210-215, 217, 220
CF189	23,81				Innocenti, Reliant, Rover	206-207, 365, 424-425
CF190	23,81				Reliant, Innocenti, Rover	206-207, 365, 424-425
CF191	19,05				Saab, Rover, Daf Truck, Ford Lcv, Reliant, Innocenti	113, 180, 206-207, 365, 420, 424-427
CF192	19,05				Ford Europe, Ford Lcv, Rover, Reliant, Bedford	47, 157-159, 177-178, 180, 365, 421-423
CF193	22,22				Volkswagen	485, 508
CF194	17,46				Volkswagen	485, 508
CF195	20,64				Lada	226-228
CF196	19,05				Volvo, Ford Lcv, Ford Europe	158-160, 178, 547
CF197	20,64	•			Nissan Lcv, Nissan	280-282, 284-288, 291
CF198	25,40				Volvo	550-551
CF199	22,20				Mercedes Benz Truck, Mercedes Benz Lcv	269-270, 272
CF200	20,64				Ford Europe	175-176
CF201	17,46				Seat, Fiat, Lancia	137-138, 231, 233, 435-436, 444-446
CF202	20,32				Ford Lcv, Rover, Daf Truck	113, 180-182, 419, 424-426
CF203	28,57				Citroën Lcv, Citroën	84, 93-94, 102
CF204	17,46	•			Alfa Romeo, Nissan	9, 282, 285, 287
CF205	22,22	•			Nissan, Nissan Lcv	280-282, 284, 286, 288, 291
CF206	19,05	•			Rover, Honda	191-193, 196-197, 417, 420
CF207	19,05	•			Honda, Rover	191-193, 196-197, 417, 420
CF208	19,05				Iveco Truck, Ford Lcv	180-181, 215-216
CF209	15,87				Alfa Romeo Lcv, Daf Truck, Ford Lcv, Iveco Truck, Ldv	12, 113, 181, 215-216, 238
CF210	26,99				Citroën Lcv, Talbot, Alfa Romeo Lcv, Peugeot Lcv, Fiat Lcv	12, 104, 147-149, 360-361, 470
CF211	19,05				Mazda	241
CF212	19,05				Toyota	474-475, 477-478, 482
CF213	19,05				Toyota	474-475, 477-478, 482

*** = Codici Nuovi / New References**

FRITECH ref.	Ø mm	ALU	PLA	CRCI	Marca - Make	Pagina Page
					Cilindretto Freno - Wheel Cylinder	
CF214	17,46				Geo, Chevrolet Usa, Toyota	82, 188, 475, 477-478, 482
CF215	17,46				Geo, Chevrolet Usa, Toyota	82, 188, 475, 477-478, 482
CF216	19,05				Fiat, Innocenti, Fiat Lcv	126, 144, 152, 206
CF217	23,81				Iveco Truck	210-212
CF218	17,46				Mazda, Mercury	240, 273
CF219	22,20				Ford Lcv	182-183
CF220	25,40				Ford Lcv	182-183
CF221	25,40				Ford Lcv	182-183
CF222	20,33				Ford Lcv	182-183
CF223	20,33				Ford Lcv	182-183
CF224	17,78	•			Rover	426-427
CF225	23,81				Opel Lcv, Renault Lcv	322, 415-416
CF226	23,81				Toyota Lcv, Toyota	481, 483-484
CF227	17,46				Mercury, Mazda	240, 273
CF228	25,40				Volkswagen Lcv	540-541
CF229	25,40				Volkswagen Lcv	540-541
CF230	50,80				Iveco Bus, Iveco Truck	208-209
CF231	26,98				Iveco Truck	214
CF232	20,64				Iveco Truck	216
CF233	19,05				Opel	294-295, 310-311, 314-316
CF234	19,05	•			Rover, Honda	194-195, 417-420, 423-424
CF235	19,05	•			Rover, Honda	194-195, 417-420, 423-424
CF236	17,46				Ford Usa, Kia, Mazda	186, 225, 240-242
CF237	25,40				Bedford, Isuzu, Opel, Opel Lcv	47-48, 207-208, 309, 323
CF238	25,40				Om (Carrelli Elevatori)	293
CF239	17,46	•			Audi, Skoda, Volkswagen Lcv, Volkswagen, Seat	17-22, 431-440, 445-447, 450, 489-497, 504-509, 511-512, 521-524, 527-530, 532-534, 536-537, 540, 542
CF240	19,05				Skoda	450, 454
CF241	17,46	•			Daihatsu	113
CF242	20,64			•	Nissan	284
CF243	20,64			•	Nissan	284
CF244	22,20				Skoda	450, 454
CF245	22,20				Bmw	55
CF246	19,05				Volkswagen Lcv	543-546
CF247	22,20				Nissan Lcv, Ford Europe, Nissan	172, 287, 291
CF248	19,05	•			Toyota	476
CF249	19,05	•			Toyota	475-476
CF250	25,40				Opel Lcv, Renault Lcv	322, 415-416
CF251	22,22				Suzuki	466-469
CF252	19,05	•			Hyundai, Rover, Kia, Honda	193-195, 198-199, 202, 204, 224, 418-421, 423-424
CF253	19,05	•			Honda, Hyundai, Rover, Kia	193-195, 198-199, 202, 204, 224, 418-421, 423-424
CF255	22,00	•			Fiat Lcv, Fiat	134-135, 155
CF256	17,46	•			Dacia, Renault Lcv, Renault	109-111, 368-369, 371, 405, 407
CF257	22,20				Mercedes Benz Lcv	271
CF258	17,46	•			Suzuki	465
CF259	22,22				Seat, Fiat	118-119, 428
CF261	17,78	•			Bedford, Rover, Ford Lcv, Opel, Marcos, Ford Europe, Reliant	47, 157, 180, 238, 320, 365, 421-423, 426-427
CF262	15,87				Saab, Rover, Innocenti, Daf Truck	113, 206, 424-425, 427
CF263	19,05				Volkswagen	485, 508
CF264	15,87				Opel	309-310, 315
CF265	22,20				Volvo	550
CF266	34,92				Om (Carrelli Elevatori)	293
CF267	15,87				Nsu, Audi	14, 16, 291
CF268	19,05				Skoda	450, 458
CF269	19,05				Plymouth, Hyundai, Dodge, Mitsubishi, Proton	115, 199, 202, 274-279, 363, 365
CF270	22,22				Alfa Romeo Lcv, Citroën Lcv, Peugeot Lcv, Fiat Lcv, Talbot	12, 103-104, 147-148, 360-361, 470
CF271	17,46				Mazda	239-240, 242
CF273	19,05				Toyota	478, 481-482

FRITECH ref.	Ø mm	ALU	PLA	CRCI	Marca - Make	Pagina Page
					Cilindretto Freno - Wheel Cylinder	
CF274	23,81				Ford Lcv	181-183
CF275	23,81				Ford Lcv	181-183
CF277	31,75				Land Rover	236-237
CF278	31,75				Land Rover	236-237
CF279	28,60				Land Rover	236-237
CF280	28,60				Land Rover	236-237
CF281	22,22				Fiat	116
CF282	22,20	•			Rover	421
CF283	17,46				Mercedes Benz Truck, Mercedes Benz	256, 272
CF284	23,81				Ford Lcv	180, 182-183
CF285	23,81				Ford Lcv	180, 182-183
CF286	17,46	•			Subaru	464
CF287	22,20				Isuzu, Bedford	48, 207-208
CF288	15,87	•			Bedford, Suzuki Lcv	48, 469
CF289	15,87	•			Bedford, Suzuki Lcv	48, 469
CF290	22,20				Toyota Lcv, Toyota, Volkswagen Lcv	475, 484, 543
CF291	15,87				Suzuki, Geo	188, 467
CF292	19,05	•			Nissan, Subaru, Suzuki	284, 464-465
CF293	31,75				Iveco Truck	214-215
CF294*	22,20				Land Rover	237
CF295	26,99				Land Rover	237
CF296	26,99				Land Rover	237
CF297	22,20				Ford Europe	175-176
CF298	20,64				Dodge Truck, Mitsubishi, Mitsubishi Lcv	116, 278-280
CF299	20,64				Mitsubishi Lcv, Dodge Truck, Mitsubishi	116, 278-280
CF300	23,81				Volkswagen	485, 508
CF301	17,46	•			Chevrolet Usa, Suzuki, Geo	83, 188, 467
CF302	15,87				Mazda, Kia, Ford Brasil	157, 225, 238
CF303	23,81				Geo, Suzuki	188-189, 467-469
CF304	20,60	•			Nissan Lcv	290
CF305	22,20				Seat, Seat Lcv	445-446, 450
CF306	22,22				Peugeot Lcv, Fiat Lcv, Citroën Lcv	103-104, 157, 360-361
CF307	17,46	•			Daihatsu	113
CF308	22,22				Mitsubishi Lcv, Mitsubishi	276, 278, 280
CF309	22,22				Mitsubishi, Mitsubishi Lcv	276, 278, 280
CF310	23,81				Iveco Truck	216
CF311	19,05	•			Hyundai	199, 201-204
CF312	19,05	•			Hyundai	199, 201-204
CF313	19,05				Toyota	475-476, 478-479
CF314	19,05				Toyota	475-476, 478-479
CF315	19,05				Fiat	121, 131
CF316	22,20				Renault	375-376
CF317	19,05	•			Mercedes Benz	245
CF318	17,78	•			Mercedes Benz	245
CF319	19,05				Chrysler Usa, Jeep Usa, Dodge Truck, Dodge	84, 115-116, 223-224
CF320	20,64	•			Buick, Opel, Daewoo, Opel Lcv	78, 112, 299-302, 307, 318-320, 323, 326
CF321	17,46				Daewoo	112
CF322	17,46				Daewoo	112
CF324	17,46				Piaggio, Daihatsu Lcv	115, 363
CF325	23,81				Opel Lcv, Renault Lcv	326-327, 409
CF326	23,81				Opel Lcv, Renault Lcv	326-327, 409
CF327	20,64				Fiat, Fiat Lcv	125, 146
CF328	28,57				Fiat	120-121
CF329	19,05				Fiat	121
CF330	28,57				Fiat Lcv	145
CF331	31,75				Iveco Truck	212
CF332	19,05				Iveco Truck	212
CF333	28,57				Iveco Truck	222
CF334	20,32				Saab, Rover, Reliant, Ford Lcv, Bedford	47, 180, 365, 424, 427
CF335	19,05	•			Ford Europe, Reliant, Rover, Lotus, Bedford, Talbot, Ford Lcv	47, 158-159, 177-178, 180, 238, 365, 421-423, 426-427, 471

*** = Codici Nuovi / New References**

FRITECH ref.	Ø mm	ALU	PLA	CRCI	Marca - Make	Pagina Page
					Cilindretto Freno - Wheel Cylinder	
CF336	20,32				Rover, Saab, Reliant, Ford Lcv, Bedford	47, 180, 365, 424, 427
CF337	22,00				Talbot	471-472
CF338	19,05				Talbot, Peugeot	331, 339, 348, 471-472
CF339	15,87				Opel	294, 309-310, 314-316
CF340	17,46				Ford Europe	177
CF341	12,70				Innocenti	206
CF342	23,81				Opel	310
CF343	23,81				Opel	310
CF344	17,46	•			Honda	190-192
CF345	19,05				Toyota Lcv, Toyota	475-477, 480, 482, 484
CF346	20,64				Toyota Lcv, Daihatsu, Toyota	113, 475-477, 480, 482, 484
CF347	17,46				Fiat, Seat, Lancia	137-138, 231, 445
CF348	20,32				Rover, Ford Lcv, Innocenti	180, 207, 417, 421, 423-425
CF349	17,46				Citroën	84, 93-94
CF350	17,46				Citroën Lcv, Citroën	84, 93-94, 102
CF351	15,72				Fiat, Seat	121, 131-132, 445
CF352	19,05				Opel	310, 314
CF354	31,75				Fiat	121
CF355	19,05				Ford Europe	158-159, 177
CF356	17,50				Ford Europe, Ford Lcv	163, 179
CF357	22,22				Fiat, Seat	118-119, 121-122, 428
CF358	17,78				Hyundai, Ford Europe	158-160, 202
CF359	17,78				Talbot	470, 472
CF360	19,05				Opel, Bedford	47, 303
CF361	17,46				Mazda	239, 241-242
CF362	17,46	•			Nissan	287
CF363	20,64	•			Nissan	281, 286-288
CF364	22,20				Volvo	550-551
CF365	15,87				Opel	294, 314
CF366	23,81				Mercedes Benz Lcv	271
CF367	22,22				Bmw	48, 50, 65
CF369	20,64				Ford Europe	159-160
CF370	19,05				Bmw	50-51
CF371	19,05				Opel	320
CF372	19,05				Opel	320
CF373	19,05	•			Opel, Rover, Reliant	320, 365-366, 421
CF374	14,28	•			Rover	420-421
CF375	22,22				Ford Lcv, Ford Europe	159-160, 178
CF376	22,22				Ford Europe, Ford Lcv	159-160, 178
CF377	15,87	•			Rover	421-423
CF378	19,05				Dodge, Plymouth, Hyundai, Mitsubishi	115-116, 202, 274-279, 363
CF379	19,05				Mitsubishi, Dodge, Hyundai, Plymouth	115-116, 202, 274-276, 278, 363
CF380	17,46				Innocenti, Rover	207, 417, 424
CF381	28,60				Citroën Lcv, Citroën	84, 93-94, 102
CF382	19,05				Citroën, Citroën Lcv	84, 93, 102
CF383	19,05				Citroën Lcv	102
CF385	22,20				Rover	422-423
CF386	20,32				Ford Lcv	180-182
CF387	20,32				Ford Lcv	180-182
CF388	20,32				Ford Lcv, Rover	180-181, 425-426
CF389	22,00				Peugeot	351-354
CF390	22,00				Peugeot	351-354
CF391	22,00				Peugeot	351-354
CF392	22,00				Peugeot	351-354
CF394	19,05				Opel	294-295, 310-311, 314
CF395	15,87				Rover	421-422
CF396	15,87				Rover	421-422
CF397	22,22				Rover	418
CF398	20,64				Mitsubishi, Dodge	115, 275-276, 278
CF399	20,64				Dodge, Mitsubishi	115, 275-278
CF400	15,87	•			Honda	192

FRITECH ref.	Ø mm	ALU	PLA	CRCI	Marca - Make	Pagina Page
					Cilindretto Freno - Wheel Cylinder	
CF401	19,05	•			Honda	190
CF402	15,87				Chrysler Usa, Chrysler, Dodge, Nissan, Dodge Truck, Plymouth	83-84, 115-116, 282, 363
CF403	17,46	•			Nissan	282, 284-286
CF404	17,78				Rover	425
CF406	22,22	•			Nissan	281-282, 286
CF407	23,81	•			Nissan	281-282, 286
CF408	17,46	•			Rover, Honda	190, 192, 197, 417, 420
CF409	17,46	•			Honda, Rover	190, 192, 197, 417, 420
CF410	19,05				Mazda	238, 241
CF411	20,64				Mazda	241-242
CF412	20,64				Toyota, Daihatsu	113, 477, 481
CF413	15,87				Toyota	482
CF414	22,20				Ford Lcv, Rover	181-182, 425-426
CF415	22,20				Ford Lcv, Rover	180-182, 425-426
CF416	15,87	•			Rover	421-423
CF417	17,78	•			Lotus, Rover, Ford Europe	158-159, 238, 417, 421
CF418	25,40	•			Rover	421
CF419	19,05				Rover, Ford Lcv	181-182, 425-426
CF420	22,20				Bedford, Rover, Ford Lcv	47, 180, 421
CF422	23,81				Bedford	47
CF423	23,81				Bedford	47
CF424	15,87				Bedford, Ford Lcv	47, 180
CF425	20,33				Bedford	47
CF426	20,64				Peugeot, Citroën	94-95, 329
CF427	20,33				Bedford	47
CF428	17,46				Rover	418-419
CF429	25,40				Land Rover	237
CF430	25,40				Land Rover	237
CF431	22,20				Toyota	476, 480
CF433	20,64				Mercury, Ford Usa	186, 272
CF435	19,05	•			Honda	190, 197
CF436	22,20				Mercury, Jeep Usa, Ford Usa Truck, Ford Usa, Dodge Truck, American Motors	13, 116, 186-187, 223-224, 272-273
CF437	22,20				American Motors, Dodge Truck, Mercury, Jeep Usa, Ford Usa, Ford Usa Truck	13, 116, 186-187, 223-224, 272-273
CF438	19,05	•			Toyota	482-483
CF439	20,64	•			Honda	190
CF440	19,05				Rover	425
CF441	19,05				Rover	425
CF442	14,29	•			Rover	423
CF443	17,46				Rover	421, 427
CF444	20,33				Rover	426
CF445	22,20				Rover	421
CF446	22,20				Rover	421
CF447	28,57				Peugeot	348, 351-353
CF448	28,57				Peugeot	348, 351-353
CF449	30,00				Peugeot	348, 351-353
CF450	22,20				Ford Lcv	182-183
CF451	22,20				Ford Lcv	182-183
CF452	15,87	•			Subaru	465
CF453	19,05	•			Subaru	465
CF454	17,46	•			Subaru	465
CF455	22,20				Bedford	48
CF456	19,05				Toyota	475
CF457	19,05				Toyota	475
CF458	22,20				Toyota, Toyota Lcv	481, 484-485
CF459	20,64				Toyota, Toyota Lcv	481, 484-485
CF460	25,40				Toyota, Toyota Lcv	481, 484
CF461	17,46	•			Honda	197
CF462	19,05	•			Honda	192-193
CF463	19,05	•			Honda	192-195
CF464	19,05	•			Honda, Suzuki, Suzuki Lcv	192-195, 466, 469
CF465	22,20	•			Suzuki	467

FRITECH ref.	Ø mm	ALU	PLA	CRCI	Marca - Make	Pagina Page
					Cilindretto Freno - Wheel Cylinder	
CF466	22,20	•			Suzuki	467
CF467	23,81	•			Suzuki, Geo	188-189, 467, 469
CF468	23,81	•			Geo, Suzuki	188-189, 467, 469
CF469	20,64				Hyundai	203
CF470	20,64				Hyundai	203
CF471	19,05				Mitsubishi, Hyundai	199, 202, 278
CF472	20,64				Hyundai, Mitsubishi	200-203, 278
CF473	20,64				Toyota Lcv	483-484
CF475	50,80				Iveco Truck, Iveco Bus	208, 212
CF476	38,10				Iveco Bus, Iveco Truck	208, 212-213
CF477	44,45				Iveco Bus, Iveco Truck	208, 212-213
CF478	50,80				Iveco Truck, Iveco Bus	208-209, 213
CF479	50,80				Iveco Truck	209
CF481	57,15				Iveco Truck	209-210
CF482	31,75				Iveco Truck	209
CF483	15,87				Bmw	48
CF484	17,46				Bmw	48
CF485	22,20				Land Rover	237
CF486	19,05				Ford Europe	163
CF487	22,20				Fiat, Fiat Lcv	116, 145
CF488	17,46				Mazda, Mazda Lcv	239-243
CF489	22,20				Mercedes Benz Lcv	271
CF490	20,64				Toyota	475
CF491	20,64				Toyota	475
CF492	19,05				Mazda Lcv	242-243
CF493	19,05				Mazda Lcv	242-243
CF494	23,81	•			Nissan, Nissan Lcv	287, 289-290
CF495	22,20	•			Nissan Lcv	289
CF496	20,64				Mitsubishi	277, 279
CF497	19,05	•			Honda	190-191, 196
CF498	19,05	•			Honda	190-191, 196
CF499	19,05	•			Honda	192-193
CF500	19,05				Toyota, Toyota Lcv	473, 483-484
CF501	15,87	•			Nissan Lcv	289
CF502	17,46	•			Nissan Lcv	289, 291
CF503	20,64	•			Nissan Lcv, Nissan	284, 291
CF505	19,05	•			Nissan Lcv, Nissan	282, 284, 286, 291
CF506	17,46				Mazda Lcv, Mazda	242-243
CF507	17,46				Mazda Lcv, Mazda	242-243
CF508	20,64	•			Honda	190
CF509	22,20	•			Suzuki	466-467
CF510	22,20				Volkswagen Lcv, Toyota Lcv, Toyota	473, 480, 484, 543
CF511	20,64				Hyundai	203
CF512	22,20	•			Suzuki	466-467
CF513	23,81				Geo, Suzuki	189, 467-469
CF514	17,46	•			Nissan, Nissan Lcv	284, 290
CF515	19,05				Mitsubishi	274, 279
CF516	19,05				Mazda	239-241
CF517	17,46	•			Nissan, Nissan Lcv	282, 284, 286-287, 291
CF518	14,28	•			Nissan Lcv	289
CF519	19,05	•			Nissan	287
CF520	20,64	•			Peugeot, Citroën, Citroën Lcv	88-89, 104, 336
CF521	15,87	•			Nissan Lcv	290
CF522	17,46	•			Nissan Lcv	289, 291
CF523	20,64	•			Bmw	65-66
CF524	22,20				Ford Lcv	181-183
CF525	22,20				Ford Lcv	181-183
CF526	22,20				Bedford	47
CF527	22,20				Bedford	47
CF528	28,60				Iveco Truck	215
CF529	25,40				Peugeot Lcv	361-362

FRITECH ref.	Ø mm	ALU	PLA	CRCI	Marca - Make	Pagina Page
					Cilindretto Freno - Wheel Cylinder	
CF530	20,64				Talbot, Peugeot	354-355, 473
CF531	20,64				Renault	395-396
CF532	14,29	•			Audi, Volkswagen	17-20, 43-44, 489-493, 504-507, 511-512, 521-523, 532-534
CF533	22,20				Talbot, Peugeot	339, 470, 472-473
CF534	44,45				Iveco Truck	214-215
CF535	31,75				Iveco Truck	214
CF536	23,81				Iveco Truck, Iveco Bus	208, 215, 222
CF537	22,20	•			Volkswagen	492-493, 495, 498-499
CF538	20,64	•			Hyundai	200, 203
CF539	20,64	•			Hyundai	200, 203
CF540	17,46				Mitsubishi	275-277, 279
CF541	23,81				Mitsubishi	276
CF542	23,81				Mitsubishi	276
CF543	17,46	•			Tata, Subaru, Suzuki	464-468, 473
CF544	17,46	•			Subaru, Tata, Suzuki	464-468, 473
CF545	26,80				Volkswagen Lcv	540-541
CF546	22,20				Nissan, Nissan Lcv	284, 288
CF547	20,64				Hyundai	204
CF548	20,64				Hyundai	204
CF549	20,64				Toyota	475
CF550	19,05				Mazda Lcv, Ford Usa Truck, Ford Usa	186-187, 243
CF551	20,64				Ford Usa Truck, Ford Usa, Mazda Lcv	186-187, 243
CF552	19,05	•			Mazda, Ford Lcv, Ford Europe	165-166, 169, 172, 177, 179, 239
CF553	17,46				Honda	196
CF554	22,20				Chevrolet Usa, Suzuki	83, 467-469
CF555	22,20				Suzuki, Chevrolet Usa	83, 467-469
CF556	19,05	•			Honda	195
CF557	23,81				Toyota Lcv, Toyota	473, 483, 485
CF558	48,00				Iveco Truck	214
CF559	38,10				Iveco Truck	215
CF560	23,81				Om (Carrelli Elevatori)	292-293
CF561	22,20	•			Suzuki	467
CF562	22,20	•			Suzuki	467
CF563	17,46				Mitsubishi	275-278
CF564	17,46				Subaru	464-465
CF565	22,20	•			Suzuki, Suzuki Lcv	466-467, 469
CF566	22,20	•			Suzuki Lcv, Suzuki	466-467, 469
CF567	15,87	•			Suzuki	465
CF568	22,00				Smart	461-463
CF569	22,00				Smart	461-463
CF570	17,46				Smart	462
CF571	17,46				Smart	462
CF572	19,05				Proton, Mitsubishi, Mazda	239, 274-275, 277-279, 365
CF573	19,05				Mazda	240
CF574	19,05	•			Honda Usa, Honda	192-193, 195, 197
CF576	19,05	•			Honda, Honda Usa	192-193, 195, 197
CF577	20,64	•			Toyota	473-474
CF578	20,64	•			Toyota	473-474
CF579	17,46	•			Toyota	482
CF580	17,46	•			Subaru, Daihatsu, Toyota	114, 464, 481-483
CF581	19,05	•			Ford Europe	164-165, 175
CF582	22,22				Toyota Lcv	484
CF583	19,05	•			Fiat	121, 131
CF584	23,81				Om (Carrelli Elevatori)	292-293
CF585	17,78	•			Hyundai	198, 200
CF586	17,78	•			Hyundai	198, 200
CF587	22,00				Talbot	471-472
CF588	20,64				Ford Usa, Mercury	186, 272
CF589	22,22				Fiat	119-120
CF590	19,05				Fiat	119-120
CF591	22,22				Fiat, Seat, Zastava	120-121, 428-429, 554

* = Codici Nuovi / New References

FRITECH ref.	Ø mm	ALU	PLA	CRCI	Marca - Make	Pagina Page
					Cilindretto Freno - Wheel Cylinder	
CF592	23,81				Fso, Fiat	117, 119-120, 188
CF593	15,72				Fiat, Fso	117, 119-120, 188
CF594	28,57				Fiat Lcv, Fiat	116, 145
CF595	23,81				Fiat, Fso	117, 188
CF598	15,87	•			Mazda	239
CF600	19,05	•			Mazda	239, 241-242
CF601	17,46				Talbot	471-472
CF602	22,20				Rover	422-423
CF603	22,00				Talbot	470, 472
CF604	20,64				Mazda	241
CF606	20,64				Mazda	241-242
CF607	14,28				Rover	425
CF608	17,46	•			Nissan	287
CF609	23,81				Mercury, Ford Usa Truck, Ford Usa, American Motors, Lincoln, Jeep Usa	13-14, 186-188, 223-224, 238, 272-273
CF610	23,81				Jeep Usa, Lincoln, Mercury, American Motors, Ford Usa, Ford Usa Truck	13-14, 186-188, 223-224, 238, 272-273
CF611	22,22				Renault	385-386
CF612	22,22				Renault	385-386
CF613	14,29	•			Subaru	465
CF614	23,81				Ford Lcv	178
CF615	17,46				Mazda Lcv, Mazda	239-243
CF616	20,64	•			Honda	190-191
CF617	20,64	•			Honda	190-191
CF618	19,05				Mazda	239, 241-242
CF619	15,87				Geo, Isuzu	188, 208
CF620	15,87	•			Nissan	285-286
CF621	17,46				Geo, Isuzu	188, 207
CF622	19,05				Mazda	239-241
CF623	22,20	•			Nissan	280
CF626	25,40				Nissan Lcv, Isuzu, Nissan	208, 282, 288
CF627	17,78				Ford Lcv, Ford Europe	160, 172, 178
CF628	22,22				Toyota, Nissan	286, 481
CF629	20,64				Nissan	285
CF630	15,87				Mazda	239-240
CF631	19,05				Mazda	239-240
CF632	19,05				Nissan	285-286
CF633	19,05				Nissan	285-286
CF634	15,87				Suzuki	465
CF635	15,87				Suzuki	465
CF636	15,87				Toyota	482
CF644	20,64				Isuzu, Toyota	207, 476
CF646	20,64	•			Toyota	475-476
CF647	20,64	•			Toyota	476
CF648	17,46				Toyota	482
CF670	19,05				Porsche	364
CF676	19,05	•			Honda	195
CF677	15,87	•			Opel, Subaru, Suzuki	293, 464, 466, 469
CF678	17,46				Chevrolet, Daewoo Lcv, Daewoo	80, 112
CF679	20,64				Chevrolet, Daewoo	80-81, 112
CF682	19,05				Renault	377-382, 402
CF683	19,05			•	Citroën, Citroën Lcv	87-89, 103-104
CF684	19,05			•	Citroën Lcv, Citroën	87-89, 103-104
CF694	15,87	•			Suzuki	469
CF695	20,64				Chrysler, Jeep	83, 222-223
CF696	25,40				Nissan, Nissan Lcv	287, 291
CF701	19,00				Subaru	464
CF705	17,46				Mazda Lcv, Ford Lcv	179, 243
CF706	17,46				Ford Lcv, Mazda Lcv	179, 243
CF707	19,05	•			Toyota	483
CF708	19,05	•			Suzuki, Toyota	465, 483
CF709	19,05	•			Hyundai	197

FRITECH ref.	Ø mm	ALU	PLA	CRCI	Marca - Make	Pagina Page
					Cilindretto Freno - Wheel Cylinder	
CF710	19,05	•			Hyundai	197
CF711	20,64	•			Hyundai Lcv	205
CF712	20,64	•			Hyundai Lcv	205
CF713	22,22				Bmw	48, 65
CF714	20,64	•			Nissan	281
CF715	15,87	•			Suzuki	465-466, 469
CF716	19,05	•			Suzuki, Suzuki Lcv	466, 469
CF717	25,40				Rover	421
CF718	25,40				Rover	421
CF719	23,81				Rover	425-426
CF720	23,81				Rover	425-426
CF721	19,05				Ford Lcv, Mazda, Ford Europe	160-165, 167, 171-175, 178-179, 239
CF722	20,20				Ford Usa, Mercury	186, 272-273
CF723	20,20				Ford Usa, Mercury	186, 272-273
CF724	20,64				Renault	366, 373
CF725	15,87	•			Seat, Audi, Volkswagen	17-20, 22, 43-44, 430-431, 487-488, 493-495, 508-509, 521-523, 532
CF727	19,05				Opel	294-295
CF728	15,87	•			Rover	421, 423
CF732	17,78				Ford Australia	157
CF734	22,20				Ford Australia	157
CF740	19,05	•			Mazda	239, 241-242
CF747	25,40				Lincoln, Ford Usa, Ford Usa Truck	186-187, 238
CF748	25,40				Ford Usa Truck, Lincoln, Ford Usa	187, 238
CF751	19,05				Mercury, Ford Usa	186, 273
CF756	50,80				Iveco Truck, Iveco Bus	208-209
CF757	25,40				Nissan, Nissan Lcv	284, 288
CF758	19,05				Toyota	477-478
CF759	19,05				Honda	191
CF762	19,05				Chevrolet Usa, Isuzu, Gmc Truck, Oldsmobile	82-83, 189, 207, 292
CF767	19,05				Ford Usa, Mercury	185, 272
CF768	19,05				Ford Usa, Mercury	185, 272
CF769	17,46				Toyota Lcv	484
CF773	22,20				Suzuki	466-467
CF775	19,05				Kia	224-225
CF777	20,64	•			Lancia	235-236
CF778	22,00	•			Fiat, Lancia, Fiat Lcv	122-123, 127-129, 153, 232-233
CF779	19,05				Chrysler	83-84
CF780	19,05	•			Nissan, Opel, Renault, Renault Lcv	283-284, 287-288, 293, 299-302, 308-309, 369-373, 383-384, 410
CF781	22,20				Daewoo, Ssangyong	111-112, 463-464
CF783	19,05				Mercury, Ford Usa, Dodge Truck	116, 186, 272-273
CF784	19,05				Chevrolet Usa, Buick, Pontiac, Oldsmobile	78, 81-82, 292, 363-364
CF785	17,46				Chrysler	83
CF786	17,78				Mazda, Ford Europe, Ford Lcv	164-165, 171-172, 175, 179, 239
CF787	17,46	•			Toyota	482
CF788	17,46	•			Daihatsu, Subaru, Toyota	114, 464, 481-483
CF789	17,46				Mazda	241
CF790	20,64	•			Fiat	135
CF791	20,64	•			Honda	191
CF792	20,64	•			Honda	191
CF793	22,20				Om (Carrelli Elevatori)	293
CF794	20,64				Chrysler	83
CF795	23,81	•			Hyundai	200
CF798	19,05	•			Daihatsu, Toyota	114, 474, 480-481
CF801	20,64	•			Citroën Lcv, Citroën, Peugeot	87-89, 103, 328
CF802	17,46	•			Citroën, Toyota, Peugeot	87, 331, 474
CF803	23,81				Nissan, Nissan Lcv	287, 291
CF804	20,64	•			Ford Europe, Ford Lcv	166-168, 180, 185
CF806	17,46				Toyota	478, 481-482
CF807	17,46				Toyota	478, 481-482

FRITECH ref.	Ø mm	ALU	PLA	CRCI	Marca - Make	Pagina Page
					Cilindretto Freno - Wheel Cylinder	
CF808	19,05	•			Lancia, Fiat, Opel, Suzuki	138, 235-236, 293-294, 467-468
CF809	17,46	•			Honda	197
CF810	17,46	•			Honda	197
CF811	19,05	•			Land Rover	238
CF812	22,20				Nissan	281, 288
CF813	25,40				Nissan	281-282, 288
CF814	17,46	•			Nissan, Honda	196, 280-281
CF815	23,81	•			Isuzu	207-208
CF816	20,64	•			Kia, Hyundai Lcv, Hyundai	203-205, 224
CF817	20,64	•			Hyundai, Hyundai Lcv, Kia	203-205, 224
CF819	20,64	•			Honda	195-196
CF820	20,64	•			Honda	195-196
CF821	22,20				Suzuki	465-466
CF822	22,20				Suzuki	465-466
CF823	20,64				Daihatsu	114
CF824	20,64				Daihatsu	114
CF825	17,46				Mazda	240-241
CF826	19,05				Citroën, Peugeot, Mitsubishi	92, 274, 276, 279, 356
CF827	20,64	•			Lancia, Peugeot Lcv, Fiat Lcv, Fiat, Opel, Chrysler, Opel Lcv, Toyota, Daihatsu, Citroën Lcv	84, 108, 113, 121, 125-128, 132-133, 135-136, 146-147, 153-155, 232-233, 236, 303-304, 324, 357, 483
CF829	22,00	•			Fiat, Fiat Lcv, Lancia	127, 153, 232-233
CF830	22,20	•			Citroën Lcv, Peugeot Lcv, Fiat Lcv	108, 156, 360
CF831	28,60				Nissan	288
CF832	17,46				Toyota	481
CF833	20,64				Kia	224, 226
CF834	17,46	•			Kia, Hyundai	198, 225
CF836	19,05	•			Hyundai Lcv	205-206
CF837	19,05	•			Hyundai Lcv	205-206
CF839	20,64	•			Ford Lcv	180, 185
CF840	19,05	•			Toyota	479
CF841	19,05	•			Toyota	479
CF847	22,20	•			Hyundai, Hyundai Lcv	204-205
CF848	22,20	•			Hyundai, Hyundai Lcv	204-205
CF849	19,05	•			Smart, Mitsubishi	275, 462
CF850	20,64	•			Peugeot, Peugeot Lcv, Citroën	90, 92-93, 337, 357
CF852	17,78	•			Renault	370, 405-406
CF853	19,05	•			Ford Europe	166
CF854	22,00	•			Dacia, Mercedes Benz Lcv, Renault Lcv, Dacia Lcv, Renault	108-111, 267, 366, 374-375, 377, 408
CF855	15,87	•			Hyundai	198-201
CF856	17,78	•			Mercedes Benz	245
CF857	20,64	•			Toyota	481, 483
CF858	20,64	•			Toyota	481, 483
CF859	15,87	•			Hyundai	198-201
CF860	20,64	•			Smart	462
CF861	20,64	•			Smart	462
CF862	17,78	•			Hyundai, Kia	198, 201, 203, 225
CF863	17,78	•			Kia, Hyundai	201, 225
CF864	20,64				Chevrolet, Daewoo	80-81, 112
CF865	25,40	•			Opel Lcv, Opel, Fiat, Fiat Lcv	126, 147, 303-304, 324
CF866	20,64	•			Fiat, Ford Europe, Fiat Lcv, Abarth	1, 120, 132-133, 154, 172
CF867	20,64	•			Citroën	90-93
CF868	22,00	•			Citroën Lcv, Citroën, Peugeot Lcv	86-87, 99-100, 102-103, 362-363
CF869	19,05	•			Dacia, Renault	109-110, 371, 377
CF870	17,46	•			Dacia, Renault	109-110, 377, 402
CF872	23,81	•			Ssangyong	463-464
CF873	19,05	•			Dacia	109
CF877	22,20	•			Kia	224
CF878	22,20	•			Kia	224
CF889	15,87	•			Kia	225

FRITECH ref.	Ø mm	ALU	PLA	CRCI	Marca - Make	Pagina Page
					Cilindretto Freno - Wheel Cylinder	
CF903	20,64	•			Chevrolet	79-80
CF904	19,05	•			Dacia	109
CF909	20,64	•			Ford Europe	157-158, 168-169
CF921	20,64	•			Citroën, Peugeot	92, 337-339
CF925	19,05	•			Suzuki	468
CF926	26,99	•			Volkswagen Lcv	537
CF927*	17,46				Oldsmobile, Pontiac, Buick, Chevrolet Usa	78, 81-82, 292, 363-364
CF928*	19,05				Oldsmobile, Chevrolet Usa, Gmc Truck, Buick, Pontiac	78, 81-83, 189, 292, 363-364
CF929*	14,28				Chrysler Usa, Dodge, Plymouth	84, 115, 363
CF930*	15,87				Pontiac, Buick, Cadillac, Oldsmobile, Chevrolet Usa	78-79, 81-82, 292, 363-364
CF931*	23,81				Jeep Usa, Cadillac, Chevrolet Usa, Gmc Truck, Buick, Pontiac, Oldsmobile	78-79, 81-83, 189, 223-224, 292, 363-364
CF932*	25,40				Jeep Usa, Pontiac, Gmc Truck, Chevrolet Usa, Cadillac, Buick, Oldsmobile	78-79, 81-83, 189, 223, 292, 363-364
CF933*	22,00				Oldsmobile, Cadillac, Chevrolet Usa, Pontiac, Buick	78-79, 81-82, 292, 363
CF934*	22,20				Pontiac, Chevrolet Usa, Gmc Truck, Oldsmobile	81-83, 189, 292, 363-364
CF935*	23,81				Chevrolet Usa, Gmc Truck	81-83, 189
CF936*	25,40				Lincoln	238
CF937*	19,05				Buick, Cadillac, Chevrolet Usa, Oldsmobile, Pontiac	78-79, 81, 292, 363
CF938*	19,05				Pontiac, Chevrolet Usa	81, 363
CF939*	19,05				Chevrolet Usa	81
CF940*	15,80				Pontiac, Cadillac, Chevrolet Usa, Oldsmobile, Buick	78-79, 81-82, 292, 364
CF941*	27,00				Gmc Truck, Chevrolet Usa	83, 189
CF942*	30,00				Gmc Truck, Chevrolet Usa	83, 189
CF944*	22,20				Cadillac, Pontiac, Buick, Oldsmobile, Chevrolet Usa	78-79, 81-82, 292, 363
CF945*	23,81				Chevrolet Usa, Pontiac, Oldsmobile, Buick	78-79, 81-82, 291-292, 363-364
CF946*	19,05				Chevrolet Usa, Gmc Truck, Oldsmobile, Buick	78, 82, 189, 292
CF947*	20,64				Gmc Truck, Chevrolet Usa	81, 189
CF948*	20,64				Chevrolet Usa	81-82
CF949*	25,40				Plymouth, Ford Usa, Ford Usa Truck, Ihc Truck, Mercury, Dodge Truck	116, 186-187, 206, 272, 363
CF950*	25,40				Plymouth, Mercury, Ford Usa Truck, Dodge Truck, Ford Usa, Ihc Truck	116, 186-187, 206, 272, 363
CF951*	20,64				Pontiac, Oldsmobile, Chevrolet Usa, Buick	78, 81, 292, 363
CF952*	17,46				Buick, Pontiac, Oldsmobile, Chevrolet Usa	78, 81-82, 292, 363-364
CF953*	22,20				Cadillac, Chevrolet Usa, Oldsmobile	79, 81-82, 292
CF954*	23,81				Cadillac, Gmc Truck, Dodge Truck	79, 116, 189
CF955*	22,20				Chevrolet Usa, Oldsmobile, Pontiac	82, 292, 364
CF956*	20,64				Jeep Usa, Jeep	222-223
CF957*	23,81				Pontiac, Oldsmobile, Chevrolet Usa, Cadillac, Buick	78-79, 82, 292, 363-364
CF958*	25,40				Ford Usa, Nissan Usa Truck, Mercury	186-187, 272-273, 291
CF959*	25,40				Cadillac, Chevrolet Usa, Gmc Truck, Cadillac Truck	79, 82-83, 189
CF960*	28,60				Gmc Truck, Chevrolet Usa	82, 189
CF961*	30,16				Chevrolet Usa, Gmc Truck	81-83, 189
CF962*	22,20				Ford Usa Truck, Mazda	187, 242
CF963*	22,20				Chevrolet Usa	83
CF964*	17,46				Goggomobil	190
CF965*	22,20	•			Nissan Lcv, Nissan	284, 290
CF966*	22,20				Toyota	477
CF967*	25,40				Cesab (Carelli Elevatori)	79
CF968*	17,46	•			Daihatsu	113-114
CF969*	17,46	•			Kia	225-226
CF970*	22,20	•			Nissan	283-284
CF971*	17,46	•			Daihatsu	113-114
CF972*	19,05				Suzuki Lcv	469
CF973*	19,05				Suzuki Lcv	469
CF974*	22,20	•			Mitsubishi	276
CF975*	22,20	•			Mitsubishi	276
CF976*	17,46	•			Daihatsu	114
CF977*	25,40				Land Rover	237
CF978*	25,40				Land Rover	237
CF979*	17,46	•			Suzuki	465
CF980*	17,46	•			Daihatsu	114
CF981*	20,64				Mazda	241-242

FRITECH ref.	Ø mm	ALU	PLA	CRCI	Marca - Make	Pagina Page
					Cilindretto Freno - Wheel Cylinder	
CF982*	20,64				Kia	226
CF983*	19,05	•			Hyundai	204
CF984*	19,05	•			Hyundai	204
CF985*	17,46	•			Daihatsu	113
CF986*	23,81	•			Hyundai	200
CF987*	17,46	•			Daihatsu	113-114
CF988*	17,46	•			Daihatsu	113-114
CF989*	20,64				Mitsubishi	278-279
CF990*	19,05	•			Suzuki	468
CF991*	19,05	•			Suzuki	468
CF992*	25,40				Toyota Lcv	484
CF993*	22,20				Nissan Lcv	289-290
CF994*	20,64				Dodge, Chrysler, Jeep	83, 115, 223
CF995*	22,20				Nissan Lcv, Nissan	282, 289
CF996*	22,20	•			Toyota Lcv	484
CF997*	23,81				Mazda Lcv, Mazda, Ford Europe	175, 241, 243
CF998*	20,64				Subaru	465
CF999*	17,46	•			Kia	225
CF1000*	17,46	•			Kia	225
CF1001*	20,64	•			Toyota	483
CF1002*	20,64	•			Volkswagen	509-510
CF1003*	19,05	•			Chevrolet	79-80
CF1004*	22,20	•			Hyundai Lcv	205
CF1005*	19,05				Kia Lcv	226
CF1006*	19,05				Kia Lcv	226
CF1007*	19,05				Kia Lcv	226
CF1008*	19,05				Kia Lcv	226
CF1009*	19,05	•			Subaru	464
CF1010*	20,64				Ford Europe	175
CF1011*	19,05				Mazda	242
CF1012*	19,05	•			Seat, Skoda	449, 458
CF1013*	19,05	•			Nissan	283-284
CF1014*	20,64	•			Ford Europe	159
CF1015*	22,20	•			Ford Lcv	180, 185
CF1016*	19,05	•			Kia	224
CF1017*	19,05	•			Kia	224
CF1018*	17,46	•			Toyota, Peugeot, Citroën	87, 331, 474
CF1019*	20,64	•			Fiat	120, 143
CF1020*	22,00	•			Renault	406
CF1021*	22,00	•			Renault	406
CF1022*	20,64	•			Smart, Renault	406, 463
CF1023*	20,64	•			Smart, Renault	406, 463
CF1024*	17,46	•			Daihatsu	114
					Correttore - Pressure Regulating Valve	
CT001	25,40	•			Fiat Lcv, Fso, Zastava, Seat, Iveco Truck, Alfa Romeo Lcv, Lada, Fiat, Autobianchi	12, 46, 117-119, 137-138, 145, 152, 188, 215-216, 227-228, 428, 445, 554
CT002*	25,40	•			Fiat, Seat	118-119, 428
CT003	25,40	•			Iveco Truck, Fiat Lcv, Lancia	145, 209, 211-216, 230-231, 234
CT004	25,40	•			Seat, Fiat	136-138, 435-436, 444-446
CT005*	19,05	•			Seat, Fiat	131-132, 445
CT006	25,40	•			Fiat Lcv, Fiat, Lancia, Autobianchi	46-47, 126, 143-145, 152, 157, 235
CT007*	25,40	•			Fiat, Seat	118-119, 428
CT008	19,05	•			Seat, Seat Lcv, Fiat	131-132, 436, 444-446, 450
CT009*	12,00				Renault, Renault Lcv	386, 398-400, 411-412
CT010	12,00				Renault, Renault Lcv	399-400, 412
CT011	25,40	•			Alfa Romeo Lcv, Peugeot Lcv, Citroën Lcv, Fiat Lcv	12, 104, 147-149, 157, 361
CT012	25,40	•			Peugeot Lcv, Alfa Romeo Lcv, Citroën Lcv, Fiat Lcv	12, 104, 147-148, 360-361
CT013	25,40/14,28				Iveco Truck	218
CT016	25,40	•			Citroën Lcv, Peugeot Lcv, Fiat Lcv	105-106, 149-151, 358-359

*** = Codici Nuovi / New References**

FRITECH ref.	Ø mm	ALU	PLA	CRCI	Marca - Make	Pagina Page
					Cilindro Frizione - Slave Cylinder	
CZ001	31,75				Iveco Truck	209, 212-213, 215
CZ002*	31,75				Iveco Bus, Iveco Truck	208-210, 213
CZ004	19,05	•			Iveco Truck	210-212
CZ005	19,05	•			Fiat Lcv, Fiat, Fso, Zastava, Iveco Truck, Iveco Bus	116, 145-146, 188, 208-215, 217, 220-222, 554
CZ006	38,10				Iveco Truck	209-210
CZ007	19,05				Iveco Truck	209-215
CZ008	25,40				Alfa Romeo	1, 3, 5-9
CZ009	25,40				Alfa Romeo	7-10
CZ010	19,05	•			Lada	227-229
CZ011	25,40				Fiat Lcv, Lancia, Fiat	124, 139-145, 157, 231, 233-234
CZ012	38,10				Iveco Truck	218
CZ013	20,64				Bmw	50-52, 65-66, 73-74, 76
CZ014	31,75				Iveco Truck	214-215
CZ015*	19,05				Iveco Truck	214-215
CZ016	23,81				Mercedes Benz	244-245, 251-252, 256-257, 260-267
CZ017	23,81				Mercedes Benz	244, 246-247, 251-256, 258-262, 264-267
CZ018	23,81				Mercedes Benz, Mercedes Benz Lcv	243-244, 257, 260-264, 269-270
CZ019	28,60				Peugeot, Peugeot Lcv	348, 352, 361-362
CZ023	25,40				Fiat, Alfa Romeo, Lancia	1, 3-5, 11-12, 122-124, 128-129, 139-141, 230-232
CZ024	25,40				Lancia, Fiat, Alfa Romeo	1-3, 123-124, 129, 140-142, 231-232
CZ025	23,81	•			Seat, Volkswagen Lcv, Volkswagen	446-447, 487, 492, 495-497, 514-515, 537, 543-546
CZ026	23,81		•		Volkswagen, Audi, Seat, Seat Lcv, Skoda	22, 433, 439, 442-443, 447-450, 455-456, 485-486, 499-500, 525-526
CZ027	20,64	•			Bmw	52-56, 76-77
CZ030	23,81				Alfa Romeo	4-5
CZ035	25,40				Alfa Romeo	2-3
CZ036	22,20				Porsche, Audi	14-16, 20-22, 35-36, 42-46, 364
CZ048	22,20				Bmw	48-49, 53-55, 59-63, 66-71, 73-74, 76-78
CZ051	22,20				Volvo	547-553
CZ052	22,20	•			Volkswagen, Audi	25-31, 38, 516-518
CZ053	22,20				Mercedes Benz Lcv, Mercedes Benz Truck, Volkswagen Lcv	267-269, 271-272, 541-542
CZ070	25,40				Fiat	122, 134
CZ071	20,64				Alfa Romeo	2, 10
CZ072*	25,40				Fiat, Fiat Lcv	134, 154
CZ073	22,20	•			Bmw	56-59, 75-77
CZ074	22,20		•		Audi, Porsche, Skoda, Volkswagen	25-33, 36-42, 364, 459-460, 516-520
CZ076	19,05				Seat, Skoda, Audi, Volkswagen Lcv, Volkswagen	23, 45, 433-434, 439, 442-443, 448, 456-457, 486-487, 499-501, 509-511, 525-527, 543-546
CZ077	19,05		•		Skoda Lcv, Seat, Skoda, Volkswagen, Audi	22, 24, 429-430, 434-435, 439-441, 443, 449-453, 457, 459-461, 486, 500, 502, 509-510, 528-529, 535
CZ080	19,05	•			Volkswagen, Audi, Skoda, Volkswagen Lcv, Seat	23-25, 46, 429-430, 443-444, 449, 457-458, 460, 488-489, 502-504, 507, 509-510, 521, 534-535, 539-540
CZ081	23,81	•			Volkswagen, Audi, Seat, Seat Lcv, Skoda	22, 433, 439, 442-443, 447-449, 455-456, 485-486, 499-500, 525-526
CZ083	22,20				Audi, Seat	32-34, 435
CZ085	22,20	•			Volvo	549, 551-553
CZ086	19,05		•		Volkswagen, Audi, Seat, Skoda, Skoda Lcv	22, 434-435, 439-442, 449, 451-453, 458-459, 461, 527-530
CZ088	23,81				Bmw	67-69
CZ093	23,81				Seat, Volkswagen, Volkswagen Lcv	446-447, 487, 492, 495-497, 514-515, 537, 543-546
CZ094*	19,05				Iveco Truck	215
CZ095	20,64				Bmw	52-56, 76-77

*** = Codici Nuovi / New References**

FRITECH ref.	Ø mm	ALU	PLA	CRCI	Marca - Make	Pagina Page
					Cilindro Frizione - Slave Cylinder	
CZ096	22,20				Volkswagen, Skoda, Porsche, Audi	25-33, 36-42, 364, 459-460, 516-520
CZ097	22,20				Audi, Volkswagen	25-31, 38, 516-518
CZ098	19,05	•			Skoda Lcv, Skoda, Audi, Volkswagen, Seat	22, 434-435, 439-442, 449, 451-453, 458-459, 461, 527-530
CZ099	19,05				Volkswagen, Seat, Skoda, Skoda Lcv, Audi	22, 24, 429-430, 434-435, 439-441, 443, 449-453, 457, 459, 461, 486, 500, 502, 509-510, 528-529, 535
CZ100*	19,05				Iveco Truck	210-212
CZ101*	19,05				Zastava, Fso, Iveco Bus, Iveco Truck, Fiat, Fiat Lcv	116, 145-146, 188, 208-215, 217, 220-222, 554
CZ102*	19,05				Lada	227-229
CZ103*	19,05		•		Citroën, Fiat, Suzuki, Citroën Lcv, Peugeot, Lancia	88-89, 91-92, 99-100, 105, 108, 143, 233, 336, 345, 350-351, 355-356, 466
CZ104*	19,05		•		Citroën, Citroën Lcv, Peugeot, Peugeot Lcv	87-91, 103-104, 344-345, 357
CZ112*	22,20				Mercedes Benz, Mercedes Benz Lcv	258, 271
CZ113*	19,05	•			Honda	195-196
CZ114*	19,05	•			Honda	195-197
CZ115*	19,05	•			Honda	191, 195-197
CZ116*	22,20				Fiat Lcv	156
CZ117*	19,05	•			Skoda	450-452
CZ118*	22,20				Bmw	48-49, 59-63, 70-77
CZ119*	22,20				Land Rover	237
CZ120*	19,05	•			Volkswagen Lcv	542, 546-547
CZ121*	22,20				Jeep	222
CZ122*	20,64				Hyundai	204
CZ123*	19,05	•			Audi	34-35, 42, 44-45
CZ124*	19,05				Nissan	280-281, 285
CZ125*	20,64				Hyundai, Mitsubishi	201, 203-204, 274-279
CZ126*	20,64				Toyota Lcv, Toyota	473-480, 483
CZ127*	20,64				Toyota	475-477, 479
CZ128*	19,05				Mazda	242
CZ129*	19,05				Ford Europe, Mazda Lcv	175, 243
CZ130*	20,64	•			Kia, Hyundai	199, 201-205, 224, 226
CZ131*	19,05	•			Hyundai	200
CZ132*	20,64				Hyundai	197-198, 200
CZ133*	20,64				Toyota	473-474, 479
					Pompa Freno - Brake Master Cylinder	
PF001	19,05				Renault, Renault Lcv	372, 384-388, 399-401, 410
PF002	20,64				Citroën Lcv, Citroën	95-96, 103
PF003	19,05				Zastava, Seat, Fiat	118, 428, 554
PF004	19,05				Fiat, Fso, Autobianchi	46, 117, 188
PF005	20,64				Volkswagen Lcv, Seat Lcv, Volkswagen	450, 487-488, 491-493, 505-507, 521-523, 533-534, 542
PF006	20,64				Fiat Lcv, Lancia, Fiat	134, 139-142, 153-154, 230, 234-235
PF007	20,64				Seat, Renault, Citroën, Peugeot, Peugeot Lcv, Renault Lcv	85-86, 100-101, 329-335, 346-347, 357, 366-368, 371, 378-382, 388-393, 406-407, 410-411, 413-414, 435-436, 444-446
PF008	19,00				Renault, Renault Lcv, Citroën, Peugeot Lcv, Peugeot	85-86, 329-335, 346-347, 357, 366-368, 378, 385, 388-392, 394-397, 401, 403-407, 410-411, 413-415
PF009	20,64				Autobianchi, Lancia, Fiat, Fiat Lcv	46-47, 132, 136-138, 143-145, 154, 157, 235
PF010	19,05				Autobianchi, Fiat	46, 119-120
PF011	19,05				Om (Carrelli Elevatori), Fiat, Zastava, Seat	121, 293, 428, 554
PF012	25,40				Fiat, Om (Carrelli Elevatori)	121, 293
PF013	19,05				Seat, Fiat, Fso	117-118, 188, 428-429, 446
PF014	19,05				Seat, Fiat	117, 428
PF015	19,05				Fiat, Lada, Seat	117, 226-230, 428
PF016	19,05				Fiat, Fiat Lcv	121, 145
PF017	19,05				Fiat	132, 143

FRITECH ref.	Ø mm	ALU	PLA	CRCI	Marca - Make	Pagina Page
					Pompa Freno - Brake Master Cylinder	
PF018	19,05				Fiat, Seat, Fiat Lcv, Seat Lcv	131-132, 143-144, 153, 157, 444-445, 450
PF019	19,05				Lancia	230-231, 233
PF020	19,05				Renault Lcv, Renault	372, 385-388, 400, 410, 412
PF021	19,05				Peugeot, Renault Lcv, Renault	331, 384-385, 387-388, 401-402, 410
PF022	20,64				Peugeot	352-355
PF023	20,64				Fiat, Fiat Lcv, Innocenti	126, 144, 152, 206
PF024	20,64				Lada	226-227, 229
PF025	20,64				Alfa Romeo Lcv, Iveco Truck	12-13, 215-216
PF026	44,45				Iveco Bus, Iveco Truck	208-210, 212-215
PF027	25,40				Iveco Bus, Iveco Truck	208, 210-215, 217, 220
PF028	25,40				Iveco Truck	210, 221
PF029	25,40				Alfa Romeo Lcv, Fiat Lcv, Iveco Truck	12, 147-149, 216
PF030	20,64				Alfa Romeo	5-9
PF031	22,20				Peugeot Lcv, Talbot, Alfa Romeo Lcv, Fiat Lcv, Citroën Lcv	12, 104, 147-149, 157, 360-361, 470
PF032	22,00				Ford Europe	175-177
PF033	20,64				Volkswagen Lcv, Volkswagen	491-493, 506-507, 513-515, 533-534, 538
PF034	19,05				Fiat Lcv, Fiat	123, 139, 146, 156
PF035	20,64				Peugeot	348-350
PF036	23,81				Ford Lcv	182-183
PF037	23,81				Ford Lcv	182-183
PF038	20,64	•			Opel, Opel Lcv	296-297, 304-306, 311-314, 316-318, 322-323, 325
PF039	22,20				Seat, Seat Lcv, Volkswagen Lcv, Skoda, Volkswagen	431-434, 437-439, 446-447, 449-450, 454-455, 487, 492-499, 506, 513-515, 524-527, 536-539, 543-545
PF040*	23,81				Volkswagen Lcv	543
PF041	20,64				Volkswagen Lcv, Volkswagen, Seat	430-432, 436-437, 446-447, 493-495, 497, 508-509, 523-525, 527-528, 536-537, 542-543
PF042	22,20				Alfa Romeo, Fiat Lcv, Lancia, Fiat	1-3, 11-12, 122-123, 128-130, 134, 139-142, 153, 230-231
PF043	23,81				Ford Lcv	180, 183-184
PF044	19,05				Autobianchi, Zastava, Fiat	46, 118, 554
PF045*	19,05				Fiat, Zastava, Fso	117, 119, 188, 554
PF046	19,05				Fiat, Autobianchi	46, 119-120
PF047*	19,05				Lancia, Seat, Fiat	117, 137-138, 231, 428, 445
PF048*	19,05				Fiat	145
PF049	19,05				Fiat	117
PF050*	19,05				Fiat Lcv, Zastava, Autobianchi, Fiat	46, 117, 152, 554
PF051	19,05				Fiat	131-132
PF052	19,05				Fiat	131-132
PF053	19,05				Fiat, Fiat Lcv, Seat	131-132, 136-138, 144, 157, 436, 444-446
PF054*	19,05				Renault, Renault Lcv	399-402, 412
PF055*	19,05				Renault, Renault Lcv	398-399, 401, 412
PF056*	19,05				Citroën Lcv, Citroën	84, 93-94, 102
PF057*	20,64				Citroën Lcv, Citroën	84, 93-94, 102
PF058	20,64				Audi, Volkswagen, Volkswagen Lcv	16-18, 43, 487-490, 504-505, 511-513, 521-523, 531-534, 538, 542
PF059	20,64				Audi, Volkswagen, Volkswagen Lcv	16-18, 20, 489-490, 504-505, 511-513, 531-534, 538
PF060*	20,64				Audi, Volkswagen	16-18, 20, 43-44, 511-513, 531-532
PF061*	20,64				Saab	427
PF062*	22,20				Saab	427
PF063*	22,30/15,75				Volvo	547
PF064	22,30				Volvo	547
PF066*	19,05				Seat	428
PF068*	19,05				Seat, Fiat	119, 428
PF070*	19,05				Seat	445
PF071*	22,20				Volvo	547

FRITECH ref.	Ø mm	ALU	PLA	CRCI	Marca - Make	Pagina Page
					Pompa Freno - Brake Master Cylinder	
PF072*	19,05				Fiat	118-119
PF073*	19,05				Fiat, Fso, Lada	117, 188, 227-228
PF074	19,05				Fiat	117
PF075*	19,05				Fiat, Fiat Lcv	118-119, 152
PF076	20,64				Renault, Renault Lcv	398-399, 401, 411-412
PF077*	20,64				Renault Lcv, Renault	399-400, 412
PF078*	20,64				Renault Lcv, Renault	399, 412
PF079	19,05				Renault Lcv, Renault	399-400, 412
PF080*	19,05				Citroën, Peugeot	94-95, 328-329
PF081	19,05				Peugeot	331, 339
PF082*	19,05				Peugeot, Talbot	328-329, 471
PF083*	19,05				Citroën, Citroën Lcv	95, 103
PF084*	20,64				Peugeot	352-354
PF085	17,46				Peugeot, Citroën Lcv, Citroën	94-95, 103, 329
PF086	19,05				Fiat	144
PF087	19,05				Ford Europe	163
PF089	20,64				Talbot, Seat	436, 444, 446, 471
PF090*	23,81				Jaguar	222
PF091	22,20	•			Alfa Romeo, Fiat, Lancia	4-5, 124, 233-234
PF092*	19,05				Zastava	554
PF093*	20,64				Renault, Renault Lcv	398-402, 412
PF094	20,64				Ford Europe	159, 170-171, 177
PF095	22,00				Ford Europe, Ford Lcv	160, 173-174, 178
PF096	22,00				Ford Europe	160, 163, 173
PF097*	20,64				Ford Lcv	178
PF098*	22,00				Ford Europe	175-176
PF099	25,40				Iveco Truck	212
PF100*	31,75				Iveco Truck	211-212
PF101*	31,75				Iveco Truck	211-212
PF102	31,75				Iveco Truck	211-212
PF103*	38,10				Iveco Truck	209, 214-215
PF104*	20,64				Ford Europe	159
PF105*	20,64				Ford Europe	158
PF107	19,05				Ford Europe, Ford Lcv	163, 179
PF108	20,64				Ford Europe, Ford Lcv	163, 179
PF109*	20,64				Opel	294-295, 310-311, 319
PF110	20,64				Opel Lcv, Opel	295, 303, 306-307, 310-311, 324-326
PF111	20,64				Rover	421-422, 425
PF112	19,05/17,78				Rover	424-425
PF114	20,64				Peugeot	348-349
PF115	20,64				Peugeot	352-355
PF116	22,20				Alfa Romeo, Fiat	5, 7-11, 117, 138
PF117	20,64				Alfa Romeo	5-8
PF118	19,05				Renault, Renault Lcv	399-400, 412
PF119	22,20				Ford Lcv	180-182
PF120*	20,64				Ford Lcv	181-182
PF121*	20,64				Ford Lcv, Ford Europe	163, 179
PF122*	20,64				Renault	371-372, 387-388
PF123*	22,20	•			Bmw	65-66
PF124	19,05				Volvo, Mercedes Benz	257-258, 260-264, 548-550
PF125*	25,40				Iveco Truck	211
PF126	25,40				Iveco Truck	210, 221
PF127	17,46				Renault Lcv, Renault	403, 407, 413-414
PF128	17,46				Peugeot	331-332
PF130	20,64	•			Honda, Rover	190-192, 197, 417
PF131	20,64				Renault Lcv, Peugeot, Peugeot Lcv, Renault	329-330, 333-335, 346-347, 357, 366-368, 378-382, 389, 391-393, 406-407
PF132	20,64				Fiat Lcv, Lancia, Fiat	139-142, 153, 230
PF133	20,64				Renault Lcv, Renault	398-399, 411-412
PF134	20,64				Renault Lcv, Renault	405, 417

FRITECH ref.	Ø mm	ALU	PLA	CRCI	Marca - Make	Pagina Page
					Pompa Freno - Brake Master Cylinder	
PF135	31,75				Iveco Truck	209, 217-218
PF136	28,57				Iveco Truck	214-215
PF137*	27,00				Iveco Truck	209, 214-215
PF138*	20,64				Alfa Romeo	5-6
PF139*	19,05				Peugeot	339-340
PF140	33,34				Iveco Truck	217-218
PF141*	19,05				Lancia	231
PF142*	23,81	•			Audi	14-16, 45
PF143	19,05				Citroën	85
PF144	22,20				Iveco Truck, Alfa Romeo Lcv	12, 215-216
PF145*	22,20				Ford Europe, Ford Lcv	163, 179
PF146	22,20				Ford Europe	160-161
PF147*	23,81				Ford Europe, Ford Lcv	160-161, 173-174, 178
PF148	23,81	•			Ford Europe, Ford Lcv	161-162, 174, 178-179
PF149	25,40	•			Ford Europe, Ford Lcv	161-162, 174, 178-179
PF150*	22,00				Ford Lcv	182
PF151	22,00				Ford Lcv	182-183
PF152	23,81				Ford Lcv	182-183
PF153	22,00				Ford Lcv	182-183
PF154	22,00				Ford Lcv	182-183
PF155	25,40/19,05				Mercedes Benz	257-258, 261, 263
PF156	22,20/17,46	•			Mercedes Benz	244-247
PF157	25,40/19,05	•			Mercedes Benz	244, 252, 257-258, 261-262, 265
PF158	23,81	•			Mercedes Benz	244, 246-247, 251-253, 260-261, 264-267
PF159	20,64				Opel, Opel Lcv	304, 325
PF160	20,64				Opel, Opel Lcv	294, 309-310, 314-316, 323
PF161	20,64	•			Opel, Pontiac	311, 313-314, 317-318, 364
PF162*	20,64	•			Opel Lcv, Opel	304, 325
PF163	20,64	•			Opel	311
PF164	20,64	•			Opel Lcv, Opel	294-295, 311-314, 326
PF165*	20,64	•			Opel	304, 311
PF166*	20,64				Opel	295, 311
PF167*	20,64	•			Opel Lcv, Opel	304, 325
PF168	22,22	•			Opel, Daewoo	111-112, 302-303, 312-313, 318
PF169	19,05				Peugeot Lcv, Peugeot	331-335, 339-340, 357
PF170	20,64				Renault Lcv, Renault	371, 394-397, 411
PF171	20,64				Renault	393, 397-398
PF172	22,20/19,05				Volvo	548-549
PF173	22,20				Citroën, Peugeot	100-102, 348-350
PF174	20,64	•			Volvo	547-548
PF175*	22,20				Renault	397
PF176*	23,81				Renault	366, 398, 403
PF177	20,64				Volkswagen	512-513, 532
PF178*	20,64				Volkswagen, Audi	18-20, 44, 512-513, 532
PF179	20,64				Audi, Volkswagen	17-19, 21, 43-44, 512-513, 532
PF180	22,20				Citroën	85-86
PF181*	20,64	•			Honda	190, 197
PF182	20,64	•			Honda	192-194
PF184	22,20	•			Honda	190, 192-193, 196
PF185	20,64				Lancia, Autobianchi	47, 235
PF186	22,20				Fiat Lcv, Fiat	121, 130-131, 152-153, 156-157
PF187	20,64				Innocenti, Fiat Lcv, Fiat	126, 144, 152, 206
PF188	22,20				Citroën	101-102
PF189	22,20				Nissan	284
PF190	20,64				Fiat	130-131
PF191	23,81				Citroën, Peugeot, Renault	101, 349, 371, 375-376, 379-380, 402
PF192	23,81				Renault	375-376
PF193	20,64	•			Opel Lcv, Opel	304-306, 317, 323, 325
PF194	20,64				Peugeot Lcv, Peugeot	331-335, 357
PF195	20,64				Peugeot	340-344, 349

*** = Codici Nuovi / New References**

FRITECH ref.	Ø mm	ALU	PLA	CRCI	Marca - Make	Pagina Page
					Pompa Freno - Brake Master Cylinder	
PF196	22,20				Fiat Lcv, Citroën Lcv, Peugeot Lcv, Citroën, Peugeot	93, 107-108, 155, 355-356, 360
PF197	22,20				Peugeot, Peugeot Lcv, Citroën Lcv, Citroën, Fiat Lcv	93, 107-108, 155, 355-356, 360
PF198	22,20	•			Opel Lcv, Opel	296-298, 302-303, 317-318, 322
PF199	22,20	•			Opel Lcv, Opel	296-298, 302-303, 318, 322
PF200	19,05				Peugeot	340
PF201	20,64				Peugeot	335, 340-343, 347
PF202	22,20				Peugeot	340-344
PF203	22,20				Fiat, Fiat Lcv	143-145, 157
PF204	25,40				Renault Lcv, Iveco Truck	216-217, 408-409
PF205	25,40				Fiat Lcv, Citroën Lcv, Peugeot Lcv	105-106, 149-150, 358-359
PF206	23,81				Fiat Lcv, Peugeot Lcv, Citroën Lcv	105-106, 149-150, 358-359
PF207	22,20				Peugeot Lcv, Fiat Lcv, Citroën Lcv	105, 149-150, 358
PF208	25,40				Peugeot Lcv, Fiat Lcv, Citroën Lcv	105-106, 149-151, 358-359
PF209	23,81				Citroën Lcv, Fiat Lcv, Peugeot Lcv	105-106, 149-151, 358-359
PF210	22,20				Peugeot Lcv, Citroën Lcv, Fiat Lcv	105, 149-150, 358
PF211	20,64				Renault Lcv, Renault	366-368, 378-382, 389-393, 405-407, 411, 417
PF212	22,20				Renault	402
PF213	20,64	•			Citroën, Peugeot	94-95, 100-101, 330-331, 341-343
PF214	22,20				Opel, Opel Lcv	296-298, 302-303, 311-313, 317-318, 322
PF215	23,81	•			Audi	15, 21, 35-36, 43-44
PF216	25,40	•			Nissan	284
PF217	23,81				Lancia, Peugeot, Citroën Lcv, Citroën, Fiat, Peugeot Lcv	93-94, 105, 107-108, 143, 236, 356, 360
PF218	23,81				Citroën Lcv, Fiat, Peugeot, Peugeot Lcv, Citroën	93-94, 105, 107-108, 143, 356, 360
PF219	22,20				Opel Lcv, Opel	296-298, 312-313, 318, 322
PF220	23,81	•			Bmw	52-55
PF221	22,20				Renault	371, 394-397
PF222	23,81	•			Audi	15, 20-21, 35-36, 43-44
PF223	23,81				Volkswagen, Audi	25-31, 36-40, 515-518
PF224	22,20				Rover	417-419
PF225	20,64				Rover	423
PF226*	22,20				Renault	402
PF227	19,05				Citroën Lcv, Peugeot, Citroën	94-95, 108, 330
PF228	25,40				Ford Europe	172-173
PF229	20,64				Fiat	130-131
PF230	25,40	•			Ford Europe, Mercury	172-173, 273
PF231	20,64	•			Seat, Volkswagen	430-432, 436-437, 446-447, 493-495, 497, 508-509, 527-528
PF232	22,20				Fiat, Fiat Lcv	121, 130-131, 152, 156-157
PF233	22,20				Fiat Lcv, Fiat	121, 130-131, 156-157
PF234	23,81				Volkswagen, Audi, Seat, Skoda	22-23, 45, 442-443, 447-448, 455-457, 485-487, 499-501, 510-511
PF235	20,64				Fiat	134
PF236	22,20	•			Fiat Lcv, Lancia, Fiat	134, 155, 232
PF237	22,20				Fiat Lcv	152
PF238	28,60				Iveco Truck	216
PF239	22,20	•			Alfa Romeo, Mercedes Benz	1-2, 10, 245
PF240	22,20	•			Mercedes Benz, Alfa Romeo	1-2, 245
PF241	23,81	•			Volkswagen, Skoda, Seat, Audi	22-23, 45, 442-443, 447-448, 455-457, 485-487, 499-501, 510-511
PF242	20,64	•			Peugeot Lcv, Peugeot	336, 340-343, 357
PF243	22,20	•			Citroën, Peugeot, Peugeot Lcv	96-98, 336, 340-344, 357
PF244	23,81				Mercedes Benz Lcv, Mercedes Benz	258, 271
PF245	23,81				Mercedes Benz Lcv, Mercedes Benz	258, 271
PF246	20,64				Alfa Romeo, Lancia	3-4, 232
PF247	23,81	•			Ford Europe	166-167
PF248	22,20	•			Seat Lcv, Seat, Volkswagen Lcv, Volkswagen	431-434, 437-439, 446-447, 449-450, 493-499, 513-515, 525-527, 536-539, 543-545
PF249	20,64	•			Opel, Opel Lcv	304-306, 317, 323, 325

FRITECH ref.	Ø mm	ALU	PLA	CRCI	Marca - Make	Pagina Page
					Pompa Freno - Brake Master Cylinder	
PF250	20,64	•			Opel Lcv, Opel	304-306, 317, 323-325
PF251	22,20	•			Renault Lcv, Renault	373-374, 407-408
PF252	22,20	•			Nissan Lcv, Renault Lcv, Renault	289, 373-374, 407-408
PF253	23,81				Volkswagen Lcv, Seat, Volkswagen, Ford Europe	169-170, 429, 534-535, 543-546
PF254	25,40	•			Ford Europe	159, 173
PF255	25,40	•			Honda	190-191, 197
PF256*	25,40	•			Honda	196-197
PF257	22,20	•			Renault	377-382
PF258	23,81	•			Mazda	240
PF259	23,81	•			Mitsubishi	274-275, 277
PF260	22,20	•			Mitsubishi, Volvo	274, 551
PF261	22,20				Lancia	232
PF262	23,81	•			Rover, Honda	193, 196, 419-420
PF263	22,20				Fiat, Fiat Lcv	125, 146
PF264	22,20				Fiat, Fiat Lcv	125, 146
PF265	23,81	•			Citroën, Citroën Lcv, Peugeot, Peugeot Lcv	86-87, 102-103, 350-351, 362
PF266	20,64	•			Citroën, Citroën Lcv, Peugeot	94-95, 108, 330-331
PF267	20,64	•			Peugeot	340-343
PF268	23,81	•			Citroën, Peugeot, Citroën Lcv, Peugeot Lcv	86-87, 96-99, 102-103, 340-344, 362
PF269	22,20	•			Peugeot, Citroën, Peugeot Lcv	96-99, 336, 341-344, 357
PF270	20,64	•			Citroën, Citroën Lcv, Peugeot	94-95, 108, 330-331
PF271	23,81	•			Citroën, Citroën Lcv, Peugeot, Peugeot Lcv	86-87, 102-103, 350-351, 362-363
PF272	23,81	•			Citroën, Peugeot, Citroën Lcv, Peugeot Lcv	86-87, 96-100, 102-103, 343-344, 362
PF273	20,64	•			Peugeot, Peugeot Lcv	336, 357
PF274	22,20	•			Citroën, Peugeot Lcv, Peugeot	96-98, 340-344, 357
PF275	23,81	•			Peugeot	350-351
PF276	23,81	•			Audi	35-36
PF277	25,40	•			Audi, Volkswagen	25-31, 36-43, 515-520
PF278	25,40	•			Audi, Volkswagen	25-31, 36-40, 516-520
PF279	23,81	•			Opel	316, 318-319
PF280	23,81	•			Opel Lcv, Opel	298-299, 320-323
PF281	22,20	•			Opel, Opel Lcv	306-307, 325-326
PF282	22,20	•			Opel	318-319
PF283	23,81/20,64	•			Bmw	52-56, 76-77
PF284	22,20/20,64	•			Bmw	56-59
PF285	23,81	•			Renault	366, 371-372
PF286	23,81				Renault	375-376
PF287	22,20				Renault	380
PF288	20,64	•			Renault Lcv, Renault	368-369, 407
PF289	25,40				Renault Lcv	409
PF290	22,20	•			Renault	377-382
PF291	20,64	•			Renault	377-379, 381-382
PF292*	19,05				Peugeot	352-354
PF293*	20,64				Volkswagen, Audi	16-17, 511-512, 531
PF294*	20,64				Fiat	121-122
PF295*	20,64				Renault	372, 387
PF304	23,81				Mercedes Benz Lcv, Volkswagen Lcv	267-268, 541-542
PF305	23,81				Ford Europe, Ford Lcv	162-163, 179
PF307	22,20				Ford Europe	164-165
PF308	23,81	•			Ford Europe, Ford Lcv	162-163, 179
PF309	23,81				Volkswagen, Seat, Ford Europe, Volkswagen Lcv	169-170, 429, 534-535, 543-546
PF310	22,20				Volkswagen Lcv, Volkswagen, Seat	430-431, 493, 495, 497-498, 508-509, 523-528, 536-537, 542
PF311	23,81				Renault	378-382, 402-403
PF312	23,81				Renault	380-381, 402-403
PF313	23,81				Renault	371-372
PF320	20,64				Fiat	135
PF322	20,64	•			Alfa Romeo	3-4
PF323	22,20	•			Alfa Romeo, Lancia	3-4, 232
PF326	25,40	•			Bmw	52-56, 66, 73

*** = Codici Nuovi / New References**

FRITECH ref.	Ø mm	ALU	PLA	CRCI	Marca - Make	Pagina Page
					Pompa Freno - Brake Master Cylinder	
PF327	25,40	•			Bmw	54, 66-67, 77
PF329	20,64	•			Volkswagen, Skoda Lcv, Skoda, Seat	434-435, 439-441, 450-453, 460-461, 528-530
PF330	20,64	•			Skoda Lcv, Skoda	450-452, 461
PF339	20,64				Fiat	129-130
PF359	19,05				Skoda	450, 454
PF374	22,20				Honda	193
PF380*	20,64	•			Opel, Suzuki	293, 469
PF381	20,64	•			Opel, Suzuki, Subaru	293, 464, 466, 469
PF382	23,81				Alfa Romeo	11-12
PF383	23,81	•			Volkswagen, Audi	26-27, 29-31, 37-40, 516-518
PF385*	22,20				Peugeot, Citroën Lcv, Citroën, Peugeot Lcv	93, 107-108, 356, 360
PF390	23,81	•			Ford Lcv	180, 184
PF393	25,40	•			Volkswagen Lcv	543-546
PF394	23,81				Ford Lcv, Ford Europe	164-165, 175, 179
PF397	23,81				Ford Europe, Ford Lcv	164-165, 179
PF398	23,81				Ford Europe	175
PF401*	22,20				Renault	375
PF405*	20,64				Renault Lcv	415-416
PF426*	25,40				Renault Lcv	409
PF429*	23,81				Fiat Lcv, Lancia, Peugeot, Peugeot Lcv, Citroën Lcv, Citroën, Fiat	93, 107-108, 143, 155, 236, 356, 360
PF434	22,20	•			Volkswagen Lcv	543-546
PF436	20,64	•			Renault, Renault Lcv	368-369, 407
PF437	20,64	•			Renault, Renault Lcv	368-369, 407
PF438	20,64	•			Renault, Renault Lcv	368-369, 407
PF442	20,64	•			Chevrolet, Daewoo, Daewoo Lcv	80, 112
PF443	20,64	•			Daewoo Lcv, Chevrolet, Daewoo	80, 112
PF444*	22,20	•			Daewoo	112
PF448	22,20	•			Daewoo	112
PF449*	20,64	•			Daewoo	111
PF452	20,64	•			Daewoo	111
PF458	23,81	•			Citroën	99
PF462*	22,20				Peugeot, Citroën Lcv, Peugeot Lcv	107, 356, 360
PF463	20,64	•			Skoda, Volkswagen Lcv, Seat, Volkswagen, Skoda Lcv	434-435, 439-441, 451-453, 459, 461, 489, 528-530, 540
PF464	23,81				Fiat, Fiat Lcv, Peugeot, Citroën, Lancia, Peugeot Lcv, Citroën Lcv	93, 107-108, 143, 155, 236, 356, 360
PF465	26,99				Iveco Truck	216
PF473	19,05				Seat	428
PF474*	19,05				Fiat	119
PF475*	17,78				Rover	423
PF479	23,81	•			Ford Europe	166-167
PF480	23,81	•			Ford Europe	166-167
PF481	22,20				Fiat, Fiat Lcv	139, 156
PF482	23,81	•			Fiat, Fiat Lcv, Lancia	127-128, 139, 153, 232-233
PF487	22,20	•			Nissan	280
PF490	20,64				Ford Europe	171-172
PF492	25,40				Audi, Volkswagen	25-31, 36-40, 42, 515-518
PF493	23,81	•			Seat, Volkswagen Lcv, Volkswagen	433-434, 438-439, 494-501, 513-515, 536-539
PF494	22,20	•			Volkswagen, Seat, Volkswagen Lcv	430-431, 508-509, 523-524, 527-528, 542-543
PF495	23,81	•			Skoda, Volkswagen Lcv	454, 539
PF499	23,81	•			Peugeot	350-351
PF500	23,81	•			Fiat, Fiat Lcv, Lancia	123, 127-128, 139, 153, 156, 232-233
PF502	25,40	•			Nissan Lcv, Opel Lcv, Renault Lcv	288-289, 326-327, 409-410
PF503	25,40	•			Nissan Lcv, Opel Lcv, Renault Lcv	288, 326-327, 409
PF504*	23,81	•			Renault Lcv	416
PF505	22,20	•			Alfa Romeo	1-2, 10
PF506	22,20	•			Citroën, Citroën Lcv, Peugeot	87-90, 103-104, 328
PF507	22,20	•			Peugeot, Citroën, Citroën Lcv	87-90, 103-104, 328

FRITECH ref.	Ø mm	ALU	PLA	CRCI	Marca - Make	Pagina Page
					Pompa Freno - Brake Master Cylinder	
PF508	20,64	•			Peugeot, Citroën, Citroën Lcv	87-89, 103-104, 328
PF509	22,20	•			Honda	195
PF510	23,81	•			Honda	195-196
PF511	28,60				Iveco Truck	217
PF512	23,81				Renault	372
PF513	25,40	•			Volvo	551-554
PF514	20,64	•			Honda	196
PF515	25,40	•			Honda	191
PF516	23,81	•			Honda	195
PF517	22,20	•			Hyundai	200
PF518	20,64	•			Hyundai	198-199
PF519	23,81	•			Hyundai	202
PF520	25,40	•			Alfa Romeo, Fiat, Saab, Opel	4, 9, 12, 125, 316-317, 319-320, 427
PF521	25,40	•			Alfa Romeo, Fiat, Opel, Saab	4, 9-10, 12, 125, 316-317, 319-320, 427
PF522	25,40	•			Opel, Saab	319, 427
PF523	23,81	•			Opel	319
PF524	22,20	•			Mini	273
PF525	22,20				Fiat Lcv, Fiat	135, 155
PF526	25,40				Citroën Lcv, Fiat Lcv, Peugeot Lcv	106, 149-151, 359
PF527	25,40	•			Alfa Romeo	5
PF528	23,81	•			Ford Europe, Mazda, Ford Lcv	165-166, 169, 179, 239
PF529	23,81				Rover	419-420, 423-424
PF530	23,81	•			Nissan, Renault	283-284, 370-371, 383-384
PF531	23,81	•			Ford Europe, Ford Lcv	165, 169, 179
PF532	22,20				Fiat, Fiat Lcv	135, 155
PF533	22,20	•			Audi	22
PF534	25,40	•			Volkswagen, Audi, Seat, Skoda	31-34, 36-41, 435, 459-460, 519-520
PF535	22,20	•			Audi	22
PF536	20,64				Fiat Lcv, Fiat	135, 155
PF537	23,81	•			Opel	315
PF538	23,81				Iveco Truck	216-217
PF539	20,64	•			Lancia, Fiat	132, 235
PF540	22,20	•			Fiat, Lancia	133, 235-236
PF541	25,40	•			Volkswagen Lcv	543-546
PF542	22,20	•			Fiat, Lancia, Fiat Lcv	133, 135, 155, 235-236
PF543	22,20	•			Fiat Lcv, Fiat	123, 139, 156
PF544	20,64				Fiat Lcv, Fiat	132-133, 154
PF545	20,64	•			Fiat, Fiat Lcv	132-133, 154
PF546	20,64				Fiat, Fiat Lcv	132-133, 154
PF547	25,40				Peugeot Lcv, Fiat Lcv, Citroën Lcv	106, 150-151, 359
PF548	23,81	•			Volkswagen	509, 523, 527
PF549	22,20	•			Volkswagen	493-495, 497-498, 524-527, 536-537
PF550	19,05	•			Smart	462
PF551	23,81	•			Volvo	551
PF552	20,64	•			Toyota	482-483
PF553	20,64	•			Toyota	482-483
PF557	23,81	•			Opel Lcv, Opel	298-299, 320-323
PF558	25,40	•			Ford Lcv	184-185
PF560	23,81	•			Ford Europe	166-167
PF571	22,20	•			Peugeot, Citroën	95, 100-102, 331
PF573	23,81	•			Peugeot Lcv, Citroën, Citroën Lcv	87, 96-99, 103, 362
PF574	25,40	•			Ford Lcv	184-185
PF575	23,81	•			Peugeot	350-351
PF576	25,40	•			Hyundai	203
PF577	22,20				Suzuki	466
PF578	22,20	•			Nissan	285
PF579	22,20	•			Nissan	285
PF580	25,40				Volkswagen Lcv, Mercedes Benz Lcv	268-269, 541-542
PF581	23,81	•			Ford Europe	166-168

FRITECH ref.	Ø mm	ALU	PLA	CRCI	Marca - Make	Pagina Page
					Pompa Freno - Brake Master Cylinder	
PF582	22,20	•			Renault, Renault Lcv, Nissan Lcv	289, 373-374, 407-408
PF583	22,20	•			Seat Lcv, Volkswagen, Seat, Volkswagen Lcv	431-434, 437-439, 449, 524-527, 538-539
PF584	22,20	•			Mini	273
PF585	23,81	•			Renault Lcv, Renault	373, 382, 403, 410
PF586	20,64	•			Honda	193-195
PF587	22,00	•			Honda	194-195
PF589	22,20	•			Peugeot	336-337
PF590	22,20	•			Peugeot, Peugeot Lcv	336, 357
PF591	25,40	•			Alfa Romeo	5
PF592	20,64				Lancia	234-235
PF593	25,40/20,64	•			Bmw	67-69, 73-74
PF594	25,40/22,20	•			Bmw	76
PF595	23,81/20,64	•			Volvo	549-553
PF596	23,81/20,64	•			Volvo	549-553
PF597	19,05				Smart, Renault Lcv, Renault	367-368, 378, 407, 462
PF598	20,64	•			Renault	369
PF599	22,20	•			Peugeot	336
PF600	25,40	•			Seat, Ford Europe, Volkswagen	169-170, 429, 534-535
PF601	23,81	•			Citroën	96-99
PF602	23,81	•			Ford Lcv	180, 184
PF603	22,20	•			Ford Lcv	179
PF604	23,81	•			Ford Europe	166-167
PF605	25,40	•			Alfa Romeo	5
PF606	23,81	•			Citroën	96-99
PF608	25,40/20,64	•			Bmw	67-69, 73-74, 76
PF609	23,81				Volkswagen, Seat	432, 437-438, 446-447, 494-501, 513-515, 536-537
PF610	19,05/23,81	•			Mercedes Benz	251-253
PF611	19,05/23,81	•			Mercedes Benz	246-247, 262
PF613	23,81	•			Toyota	473-474
PF614	23,81/22,00				Bmw	56-59
PF615	23,81/22,00				Bmw	57-59
PF617	20,64	•			Renault, Dacia	109-110, 377
PF620	25,40	•			Opel Lcv, Nissan Lcv, Renault Lcv	290-291, 327-328, 416-417
PF621	25,40	•			Renault Lcv, Nissan Lcv, Opel Lcv	290-291, 327-328, 416-417
PF622	25,40	•			Opel Lcv, Renault Lcv, Nissan Lcv	290, 327-328, 416-417
PF623	20,64	•			Renault Lcv, Opel Lcv, Nissan Lcv	290-291, 327-328, 416-417
PF624	20,64	•			Renault Lcv, Opel Lcv, Nissan Lcv	290, 327-328, 416-417
PF625	22,20	•			Citroën Lcv, Citroën, Peugeot	87-90, 103-104, 328
PF626	19,05/23,81	•			Mercedes Benz	253-255
PF627	22,20/25,4	•			Mercedes Benz	247-248, 255, 259
PF628	23,81/22,20	•			Bmw	56-59
PF629	25,40	•			Bmw	70-71, 75-76
PF630	20,64	•			Fiat Lcv, Fiat	129-130, 153
PF631	22,20	•			Hyundai	200
PF632	23,81	•			Hyundai	202
PF633	19,05/23,81	•			Mercedes Benz	246-248, 259, 262
PF634	19,05/23,81	•			Mercedes Benz	248, 250, 259
PF635	25,40	•			Mercedes Benz Lcv, Mercedes Benz	256, 268-269
PF636	23,81	•			Mercedes Benz Lcv	267-268
PF637	25,40	•			Nissan	288
PF638	23,81	•			Opel	315
PF639	25,40	•			Renault	372, 406
PF640	25,40	•			Renault	372, 406
PF641	23,81	•			Renault	376
PF642	23,81	•			Saab	427
PF643	20,64	•			Toyota	474, 481
PF644	23,81	•			Volvo	550-553
PF645	22,20	•			Volkswagen	508-509
PF646	22,20	•			Skoda, Audi, Seat, Volkswagen	24, 429-430, 443-444, 449, 457-458, 502-503

FRITECH ref.	Ø mm	ALU	PLA	CRCI	Marca - Make	Pagina Page
					Pompa Freno - Brake Master Cylinder	
PF647	22,20	•			Seat, Audi, Volkswagen Lcv, Skoda, Volkswagen	24-25, 429-430, 443-444, 449, 457-458, 502-503, 507, 535-536, 539-540
PF650	23,81	•			Citroën	99
PF653	19,05/25,4	•			Mercedes Benz	253-256
PF654	19,05/25,4	•			Mercedes Benz	254-256, 258, 261-262
PF655	19,05/25,4	•			Mercedes Benz	252, 258, 265
PF656	25,40	•			Opel Lcv, Opel	299-302, 323
PF657	25,40	•			Opel, Opel Lcv	299-302, 323
PF658	22,20	•			Opel Lcv, Opel	306-307, 325-326
PF659	23,80	•			Opel, Opel Lcv	303, 306-307, 317, 324-326
PF660	23,81	•			Opel Lcv, Opel	303, 306-307, 317, 324-326
PF661	19,05	•			Skoda, Skoda Lcv, Volkswagen	450-452, 460-461, 528-530
PF693	23,81	•			Ford Europe, Mazda, Ford Lcv	165-166, 169, 179, 239
PF699	22,20	•			Fiat Lcv, Fiat, Opel	126-127, 153, 293, 308-309
PF700	22,20	•			Fiat, Opel, Alfa Romeo, Fiat Lcv	11, 126-128, 133, 135-136, 153-154, 308
PF704	22,20	•			Fiat, Abarth	1, 120, 132-133
PF710	20,64	•			Renault, Dacia	109-110, 377, 402
PF714	23,81	•			Renault	369-373, 383
PF715	23,81	•			Renault	369-373, 383-384
PF724	26,99	•			Citroën Lcv, Peugeot Lcv, Fiat Lcv	107, 151-152, 359
PF729	20,64	•			Renault	405-406
PF789	23,81	•			Toyota	474, 480
PF790	23,81	•			Toyota	474, 480
PF791	22,20	•			Citroën, Peugeot, Peugeot Lcv	87-90, 337-338, 357
PF792	22,20	•			Peugeot Lcv, Peugeot, Citroën	87-93, 328, 337-339, 357
PF793	22,20	•			Fiat Lcv, Peugeot Lcv, Citroën Lcv	108, 153, 155, 357
PF794	20,64	•			Citroën, Peugeot, Toyota	87, 331, 474
PF795*	20,64				Fiat, Alfa Romeo, Lancia	3-4, 129-130, 232
PF796*	20,64	•			Suzuki, Toyota	466, 482-483
PF797*	20,64	•			Toyota	482-483
PF798*	23,81	•			Peugeot, Citroën Lcv, Citroën, Peugeot Lcv	91-93, 105, 344-346, 356-357
PF799*	23,81	•			Volkswagen, Seat, Audi, Skoda	22-23, 45, 442-443, 447-448, 455-457, 485-487, 499-501, 510-511
PF800*	22,20	•			Opel, Opel Lcv	303, 306-307, 317, 324-326
PF801*	25,40	•			Mazda	239
PF802*	23,81/22,20	•			Bmw	48-49, 59-60
PF803*	23,81	•			Mercedes Benz, Mercedes Benz Lcv	267, 271-272
PF804*	22,20/20,64	•			Bmw	56-59
PF806*	23,81	•			Renault Lcv, Opel Lcv, Nissan Lcv	288-289, 326-327, 409-410
PF809*	26,99	•			Chrysler	84
PF810*	25,40	•			Jeep	222-223
PF811*	23,81	•			Chrysler	83-84
PF812*	23,81	•			Renault, Nissan	283-284, 370, 383-384
PF813*	26,99	•			Kia	226
PF814*	20,64	•			Toyota	479-480
PF815*	22,20	•			Toyota	479
PF816*	20,64	•			Toyota	480
PF817*	20,64	•			Toyota	480
PF818*	23,81	•			Audi, Seat, Skoda, Volkswagen	22-23, 45, 442-443, 447-448, 455-457, 485-487, 499-501, 510-511
PF819*	23,81				Volkswagen Lcv	541-542
PF820*	23,81	•			Volkswagen Lcv	541-542
PF821*	25,40	•			Volkswagen Lcv	543-546
PF822*	25,40	•			Volkswagen, Ford Europe, Seat	169-170, 429, 534-535
PF823*	25,40	•			Seat	429
PF824*	25,40	•			Seat	429
PF825*	23,81	•			Volkswagen	509
PF826*	25,40	•			Skoda, Seat, Audi, Volkswagen	31-34, 36-41, 435, 459-460, 519-521
PF827*	22,20	•			Audi	22

FRITECH ref.	Ø mm	ALU	PLA	CRCI	Marca - Make	Pagina Page
					Pompa Freno - Brake Master Cylinder	
PF828*	25,40	•			Mercedes Benz	256-257
PF829*	25,40	•			Mercedes Benz	256-257
PF830*	19,05/23,81	•			Mercedes Benz	253-255
PF831*	19,05/23,81	•			Mercedes Benz	246-248
PF832*	20,64/23,81	•			Mercedes Benz	248-250, 258-260
PF833*	20,64/25,40	•			Mercedes Benz	248-251, 259-260, 262
PF834*	20,64/25,40	•			Mercedes Benz	262
PF835*	23,81	•			Nissan	280-281
PF836*	22,20	•			Hyundai	199, 201-202
PF837*	20,64/23,81	•			Mercedes Benz	248-250, 258-260
PF838*	23,81	•			Mercedes Benz	246
PF839*	22,20	•			Fiat	130
PF840*	22,20	•			Fiat	130
PF841*	22,20	•			Fiat, Fiat Lcv	135, 155
PF842*	22,20	•			Fiat Lcv, Fiat	125, 146
PF843*	22,20	•			Fiat Lcv, Fiat	125, 146, 155
PF844*	23,81	•			Fiat, Fiat Lcv	125-126, 146-147
PF845*	23,81	•			Lancia, Fiat	127-128, 232-233
PF846*	20,64	•			Fiat, Fiat Lcv	120, 132-133, 154
PF847*	23,81	•			Lancia, Fiat Lcv, Fiat	123, 125-126, 146-147, 231
PF848*	22,20	•			Suzuki, Fiat	138, 468
PF849*	22,20	•			Fiat, Suzuki	138, 468
PF850*	23,81	•			Renault	366, 380-381, 402-403
PF851*	22,20	•			Suzuki	466
PF853*	20,64	•			Citroën, Peugeot, Toyota	87, 331, 474
PF854*	23,81	•			Peugeot, Citroën	90-91, 337-338
PF855*	23,81	•			Peugeot, Citroën	90-91, 331, 337-339
PF856*	20,64	•			Hyundai	198-199
PF857*	23,81	•			Opel	308-309
PF858*	23,81	•			Abarth, Alfa Romeo, Fiat, Fiat Lcv, Opel	1, 11, 133, 154, 308-309
PF860*	20,64	•			Toyota	483
PF861*	23,81	•			Opel	315
PF862*	23,81	•			Opel	315
PF865*	25,40	•			Opel, Opel Lcv	299-302, 323
PF866*	25,40	•			Opel, Opel Lcv	299-302, 323
PF867*	25,40	•			Ford Europe	158, 167-168
PF869*	22,20	•			Skoda, Volkswagen, Audi, Volkswagen Lcv, Seat	23-25, 429-430, 443-444, 449, 457-458, 460, 503-504, 507, 535-536, 539-540
PF870*	22,20	•			Audi, Skoda, Volkswagen	23-25, 457-458, 488-489, 502-504
PF871*	22,20	•			Chevrolet, Daewoo	80, 111
PF873*	23,81	•			Citroën, Peugeot, Peugeot Lcv	91-93, 345-346, 357
PF874*	25,40	•			Citroën Lcv, Fiat Lcv, Peugeot Lcv	107, 151-152, 359-360
PF875*	25,40	•			Fiat Lcv, Peugeot Lcv, Citroën Lcv	107, 151-152, 359-360
PF876*	26,99	•			Fiat Lcv, Citroën Lcv, Peugeot Lcv	107, 151-152, 359-360
PF877*	25,40	•			Peugeot Lcv, Citroën Lcv, Fiat Lcv	108, 156, 360
PF878*	25,40	•			Fiat Lcv, Citroën Lcv, Peugeot Lcv, Toyota Lcv	108, 156, 360, 485
PF879*	26,99	•			Audi	32-34, 41-42
PF880*	20,64	•			Mazda	240
PF884*	23,81	•			Citroën, Peugeot Lcv, Citroën Lcv	86-87, 102-103, 362
PF886*	22,20	•			Suzuki, Opel	293-294, 467-468
PF887*	20,64	•			Volkswagen	489, 528-530
PF890*	25,40/22,20	•			Bmw	49, 59-63, 74-75
PF892*	23,81	•			Mini	273-274
PF895*	23,81	•			Nissan	285
PF896*	23,81	•			Smart	462-463
PF897*	25,40	•			Mercedes Benz Lcv, Volkswagen Lcv	269, 540
PF898*	25,40	•			Ford Lcv	185
PF899*	22,20	•			Dacia, Renault	109-110, 377
PF901*	23,20	•			Opel, Suzuki	293-294, 467-468
PF902*	20,64	•			Honda	194
PF904*	22,20	•			Hyundai	199, 201-202

FRITECH ref.	Ø mm	ALU	PLA	CRCI	Marca - Make	Pagina Page
					Pompa Freno - Brake Master Cylinder	
PF905*	22,20	•			Toyota	481
PF906*	23,81/22,20	•			Bmw	77
PF907*	25,40	•			Volkswagen Lcv	541-542
PF908*	23,80	•			Renault	369-370, 373, 383-384
PF909*	23,80	•			Audi	45
PF910*	23,80	•			Skoda	455-457
PF911*	23,81	•			Porsche	364-365
PF912*	23,81	•			Opel, Fiat Lcv, Fiat, Opel Lcv	126, 147, 303-304, 324
PF913*	23,81	•			Opel, Opel Lcv, Fiat Lcv, Fiat	126, 147, 303-304, 324
PF914*	23,81	•			Fiat, Fiat Lcv	126, 147
PF915*	22,20	•			Citroën	87-89
PF916*	22,20	•			Citroën, Peugeot	90, 337-338
PF917*	23,81	•			Citroën, Peugeot	90, 338
PF918*	22,20	•			Peugeot, Citroën	90, 92, 337-338
PF919*	23,81	•			Peugeot, Citroën	90, 92-93, 331, 338
PF920*	25,40	•			Kia	224
PF921*	25,40	•			Kia	226
PF922*	25,40	•			Kia	224
PF923*	22,20	•			Hyundai	198
PF924*	23,81	•			Nissan	285
PF925*	23,81	•			Nissan, Renault	288, 375
PF926*	23,81	•			Renault, Nissan	288, 375
PF927*	25,40	•			Chrysler	83-84
PF928*	26,99	•			Chrysler	84
PF929*	26,99	•			Kia	226
PF930*	23,81	•			Mazda	242
PF931*	25,40	•			Ford Europe	175
PF932*	25,40	•			Ford Europe, Mazda	175, 241
PF933*	25,40	•			Mazda, Ford Europe	175, 241
PF934*	23,81	•			Alfa Romeo	10
PF935*	20,64	•			Suzuki	466
PF936*	20,64	•			Toyota	479-480
PF937*	22,20	•			Fiat	128
PF938*	22,20	•			Daihatsu	114
PF939*	26,99	•			Jeep, Dodge	115, 222
PF940*	20,64	•			Jeep, Dodge	115, 223
PF941*	25,40	•			Chevrolet, Opel	80, 302-303, 309-310, 321-322
PF942*	23,81	•			Honda	196
PF943*	19,05	•			Honda	195
PF944*	20,64	•			Honda	191
PF945*	22,20	•			Hyundai	198
PF946*	22,20	•			Hyundai	198
PF947*	25,40	•			Kia, Hyundai	205, 226
PF948*	25,40	•			Hyundai	204
PF949*	22,20	•			Kia, Hyundai	198, 225
PF950*	26,99	•			Hyundai	203
PF951*	25,40	•			Hyundai	199, 204
PF952*	22,20	•			Kia	225
PF953*	22,20	•			Hyundai, Kia	201, 224-225
PF954*	25,40	•			Mazda	239
PF955*	20,64	•			Mitsubishi	274-275, 277-278
PF956*	25,40	•			Nissan	283
PF957*	20,64	•			Toyota	482
PF958*	22,20	•			Lexus	238
PF959*	22,20	•			Toyota	483
PF960*	26,99	•			Volkswagen	535
PF961*	22,20	•			Volkswagen	502-504, 507, 509-510
PF962*	23,81	•			Toyota	474, 480
PF963*	20,64	•			Daihatsu	113-114
PF964*	22,20	•			Suzuki	468
PF965*	20,64	•			Lancia	235

FRITECH ref.	Ø mm	ALU	PLA	CRCI	Marca - Make	Pagina Page
					Pompa Freno - Brake Master Cylinder	
PF966*	22,20	•			Toyota	473
PF967*	22,20	•			Toyota	473
PF968*	22,20	•			Toyota	480
PF969*	22,20	•			Toyota	473, 480
PF970*	23,81	•			Toyota	474
PF971*	20,64	•			Dacia, Renault	109-110, 402
PF972*	22,20	•			Dacia Lcv, Dacia	109, 111
PF973*	20,64	•			Skoda, Seat, Volkswagen, Skoda Lcv	434-435, 439-441, 450-453, 458-461, 489, 528-530
PF974*	23,81	•			Nissan	280-281
PF975*	19,05	•			Bmw	67-69, 73-74
PF976*	26,99/20,64	•			Bmw	74
PF977*	22,20	•			Toyota	478-479
PF978*	20,64				Opel Lcv, Renault Lcv, Nissan Lcv	290, 327-328, 416-417
PF979*	20,64				Nissan Lcv, Opel Lcv, Renault Lcv	290, 327-328, 416-417
PF980*	20,64				Opel Lcv, Nissan Lcv, Renault Lcv	290, 327-328, 416-417
PF981*	26,99	•			Jeep	222
PF982*	26,99	•			Mercedes Benz Lcv, Volkswagen Lcv	269, 540
PF983*	23,81	•			Ford Europe	164-165
PF984*	31,75	•			Iveco Truck	217
PF985*	31,75	•			Iveco Truck	217
PF986*	25,40	•			Iveco Truck	217
PF987*	23,81	•			Renault	373, 376-377, 382, 403
PF988*	25,40	•			Ford Lcv	185
PF989*	22,20	•			Peugeot	337
PF990*	23,81	•			Renault	373, 382-383, 403
PF991*	26,99/22,20	•			Bmw	71-73
PF992*	26,99/22,20	•			Bmw,	70-71, 73-74
PF993	20,64	•			Volkswagen, Seat, Skoda, Skoda Lcv	434-435, 439-441, 450-453, 460-461, 528-530
					Pompa Frizione - Clutch Master Cylinder	
PZ001	31,75				Iveco Bus, Iveco Truck	208, 210, 212-213, 215, 222
PZ002	31,75				Iveco Truck	209, 213
PZ004	19,05				Fiat	145
PZ005	19,05				Iveco Truck, Iveco Bus	208-215
PZ006	25,40				Iveco Truck	209-210
PZ007	19,05				Iveco Truck	215, 217, 220, 222
PZ008	31,75				Iveco Bus, Iveco Truck	208-209, 212-213
PZ009	19,05	•			Iveco Truck	210, 221
PZ010	19,05	•			Fso, Fiat Lcv, Zastava, Fiat, Iveco Truck	116, 145-146, 188, 211-212, 554
PZ011*	19,05				Iveco Truck	213
PZ013	19,05				Alfa Romeo	5-9
PZ014	19,05	•			Lada	227-229
PZ015	19,05				Lancia, Fiat Lcv, Fiat	124, 144-145, 157, 233-234
PZ016	19,05				Alfa Romeo	7-11
PZ018	31,75				Iveco Truck	219
PZ019	25,40				Iveco Truck	218
PZ020	19,05				Bmw	50-51, 65, 73
PZ021*	31,75				Iveco Truck	209-210
PZ022	19,05				Mercedes Benz, Mercedes Benz Lcv	257, 260, 262-264, 269-270
PZ023	19,05	•			Mercedes Benz	244-247, 251-256, 258-262, 264-267
PZ024	19,05				Peugeot	352-355
PZ025	19,05				Alfa Romeo	4-5
PZ026*	31,75				Iveco Bus	208
PZ027	19,05				Iveco Truck	212
PZ028*	25,40				Iveco Truck	210
PZ029	19,05				Mercedes Benz Lcv	267, 270-271
PZ030	19,05	•			Bmw	52-54
PZ032	19,05				Fiat, Alfa Romeo, Lancia	3-4, 129, 232
PZ033	19,05				Alfa Romeo	1

FRITECH ref.	Ø mm	ALU	PLA	CRCI	Marca - Make	Pagina Page
					Pompa Frizione - Clutch Master Cylinder	
PZ034	19,05				Fiat, Lancia, Alfa Romeo	1-3, 11-12, 122-124, 128-129, 140-142, 230-231
PZ037	19,05				Lancia	231-232
PZ038	15,87				Fiat, Fiat Lcv	134-135, 155
PZ039	15,87				Fiat	134-135
PZ050	19,05	•			Bmw	51-52, 65-66, 73
PZ060	19,05				Fiat, Lancia	139-143, 230
PZ061	19,05				Volkswagen Lcv, Volkswagen	494-499, 525, 536-537, 539
PZ062	19,05				Volkswagen, Seat	447, 487, 513-515
PZ064	15,87		•		Skoda, Seat, Volkswagen, Audi	22-23, 45, 442-443, 447-448, 455-457, 485-487, 499-501, 510-511
PZ065	15,87	•			Honda	190-191, 197
PZ066	15,87	•			Honda	193-194, 196
PZ067	19,05				Lancia, Fiat	129, 231
PZ068	15,87				Alfa Romeo	3-4
PZ070	19,05				Alfa Romeo, Lancia	5, 231-232
PZ071	15,87				Fiat, Lancia	127, 232-233, 235-236
PZ072	15,87				Fiat, Lancia	127-128, 232-233, 235-236
PZ073	15,87				Alfa Romeo	1-2, 10
PZ075	19,05				Volkswagen Lcv, Mercedes Benz, Mercedes Benz Lcv	258, 267-269, 271, 541-542
PZ076	19,05	•			Volkswagen, Audi	25-31, 38, 516-518
PZ077	15,87	•			Seat, Skoda, Skoda Lcv, Volkswagen	434-435, 439-441, 450-453, 459, 461, 528-530
PZ078	15,87		•		Opel Lcv, Opel	298-302, 322-323
PZ079	15,87		•		Opel	320-321
PZ080	19,05		•		Bmw	48-50, 56-65, 67-69, 74-78
PZ081	19,05		•		Bmw	52-56, 76-77
PZ082	19,05				Volkswagen Lcv	543-546
PZ085	19,05		•		Volkswagen, Audi, Skoda	25-31, 36-41, 459-460, 516-520
PZ087	19,05				Bmw	52-56, 76-77
PZ090	15,87				Fiat Lcv, Fiat	125, 146-147
PZ091	19,05	•			Seat, Ford Europe, Volkswagen	169-170, 429, 534-535
PZ092	19,05	•			Ford Europe	159, 172-173
PZ093	31,75				Iveco Truck	218-221
PZ094	15,87				Mercedes Benz	245
PZ095	15,87		•		Mercedes Benz	245, 267
PZ096	19,05		•		Mercedes Benz	248-251, 258-260, 262
PZ097	15,87				Opel	318-319
PZ098	15,87				Opel	319, 321
PZ099	15,87				Volkswagen Lcv, Volkswagen, Seat, Seat Lcv	433-434, 439, 450, 525, 538-539
PZ100	19,05				Mercedes Benz Lcv	270-271
PZ101	19,05	•			Bmw	52-56, 76-77
PZ102	19,05				Bmw	48-50, 56-65, 67-69, 74-78
PZ103	15,87				Opel, Opel Lcv	298-302, 322-323
PZ104	15,87				Opel	320-321
PZ105	19,05	•			Volkswagen, Skoda, Audi	25-31, 36-41, 459-460, 516-520
PZ106	19,05	•			Volkswagen, Audi	25-31, 38, 516-518
PZ107	15,87				Audi, Skoda, Seat, Volkswagen	22-23, 45, 442-443, 447-448, 455-457, 485-487, 499-501, 510-511
PZ108	15,87				Mercedes Benz	245
PZ109	15,87				Mercedes Benz	245-246, 267
PZ110	19,05				Mercedes Benz	248-251, 258-260, 262
PZ111*	19,05				Fiat, Fiat Lcv, Zastava, Fso, Iveco Truck	116, 145-146, 188, 211-212, 554
PZ112*	19,05				Lada	227-229
PZ113*	19,05				Mercedes Benz	244-247, 251-256, 258-262, 264-267
PZ114*	15,87		•		Citroën	89
PZ115*	15,87		•		Peugeot, Citroën Lcv, Citroën	91, 105, 345-346
PZ116*	15,87		•		Peugeot, Citroën	91, 344-345
PZ117*	15,87		•		Opel Lcv, Opel	303, 306-307, 317, 324-326
PZ118*	19,05		•		Ford Europe, Mazda	166-167, 239

*** = Codici Nuovi / New References**

FRITECH ref.	Ø mm	ALU	PLA	CRCI	Marca - Make	Pagina Page
	Pompa Frizione - Clutch Master Cylinder					
PZ119*	19,05		•		Ford Europe, Ford Lcv	164-165, 171-172, 175, 177, 179
PZ120*	25,40				Iveco Truck	218
PZ130*	19,05	•			Fiat, Peugeot Lcv, Citroën Lcv, Fiat Lcv, Lancia, Peugeot, Citroën	92, 94, 108, 143, 155, 233, 236, 356, 360
PZ144*	15,87				Fiat Lcv	149-151
PZ145*	15,87				Fiat, Suzuki	138, 466, 468
PZ146*	15,87	•			Abarth, Fiat, Peugeot Lcv, Opel Lcv, Fiat Lcv, Alfa Romeo, Citroën Lcv, Opel	1, 11, 108, 120, 135-136, 153, 155, 293, 303-304, 308-309, 324, 357
PZ147*	31,75	•			Iveco Truck	218-219, 221
PZ148*	15,87				Seat, Volkswagen	431, 509, 527-528
PZ149*	15,87				Volkswagen Lcv	546
PZ150*	15,87				Volkswagen	495, 498, 525-526, 537
PZ151*	15,87	•			Toyota	478-479
PZ152*	15,87	•			Honda	194, 196
PZ153*	15,87	•			Hyundai	204
PZ154*	15,87	•			Honda	191, 195-197
PZ155*	15,87				Citroën Lcv, Peugeot Lcv	105-106, 358-359

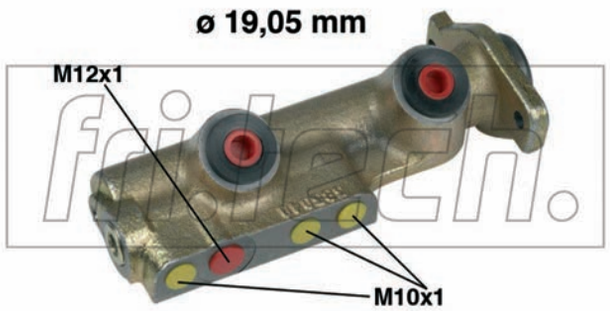

PF001

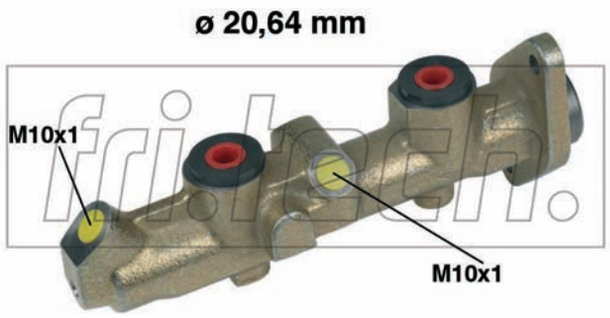

PF002

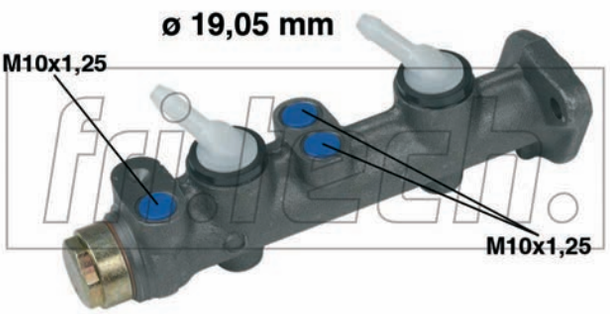

PF003

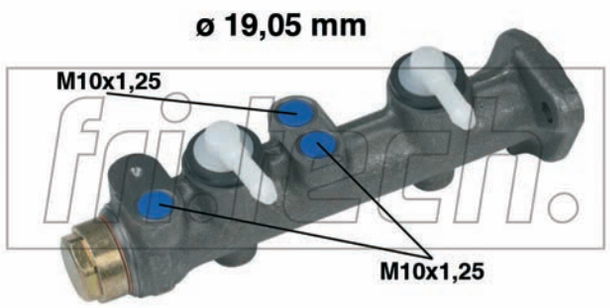

PF004

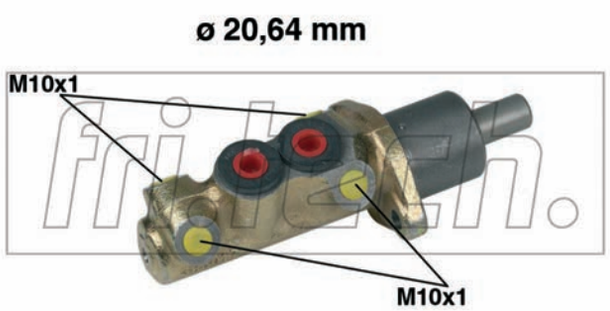

PF005

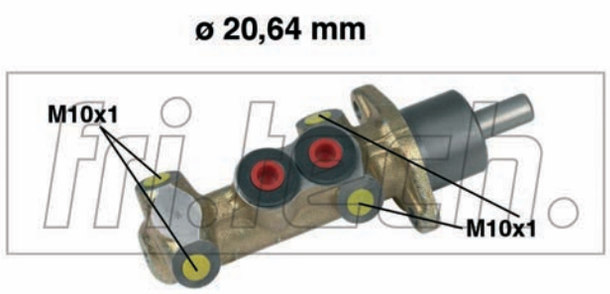

PF006

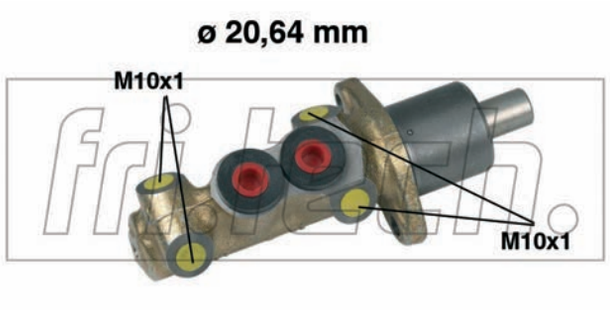

PF007

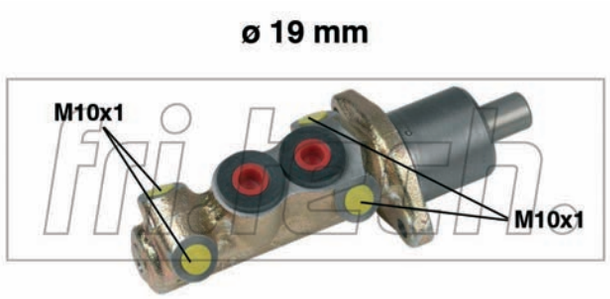

PF008

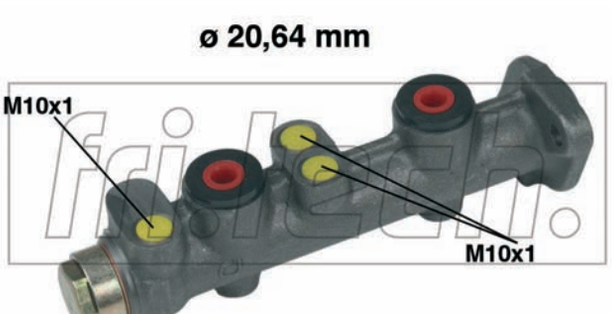

PF009

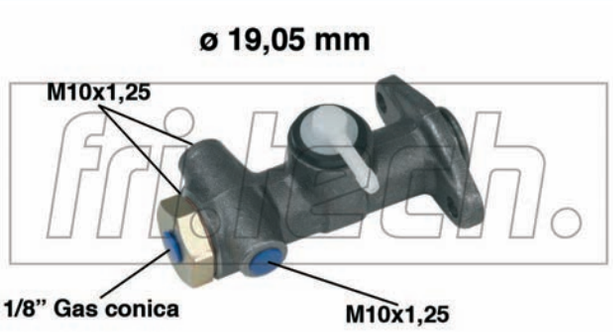

PF010

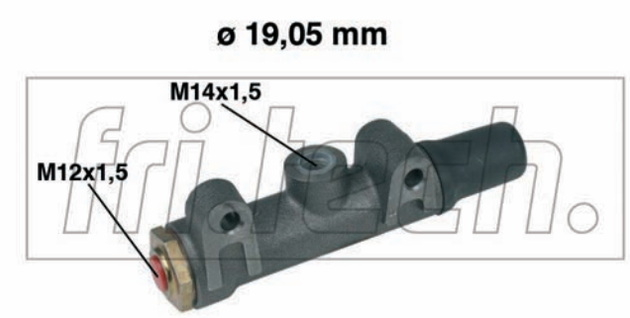

PF011

PF012

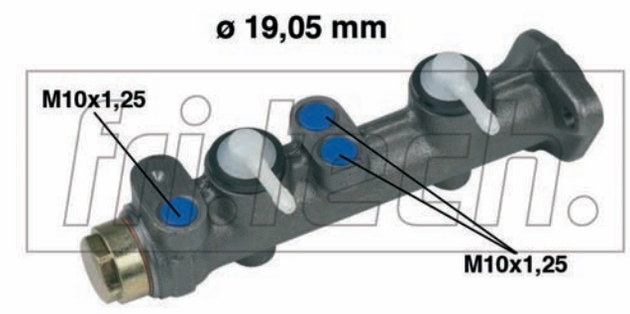

PF013

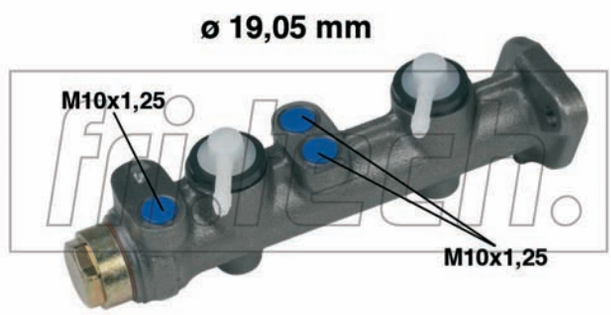

PF014

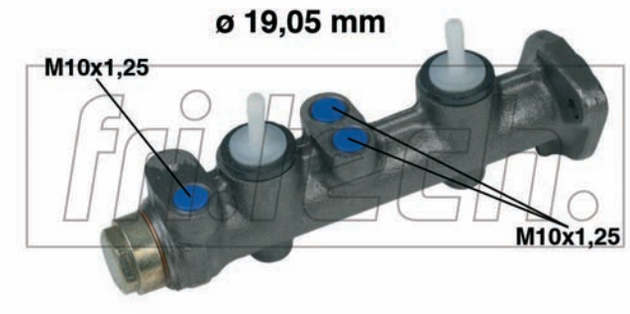

PF015

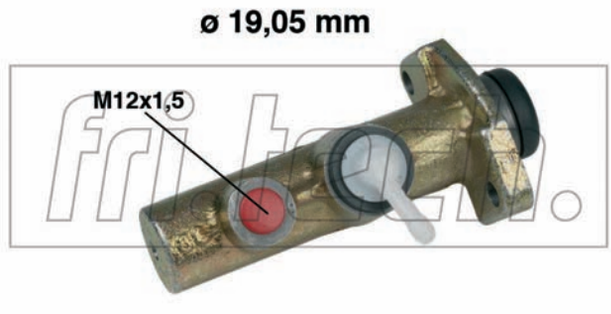

PF016

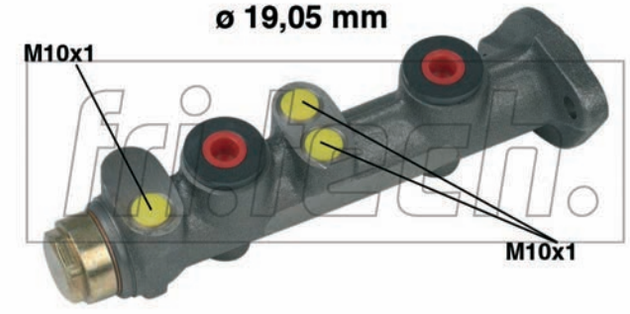

PF017

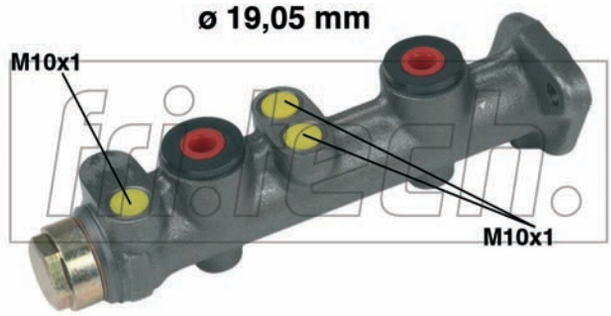

PF018

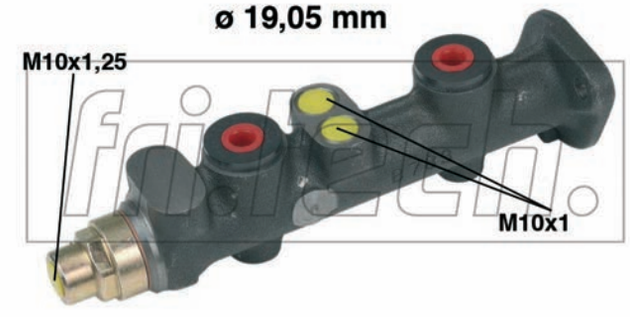

PF019

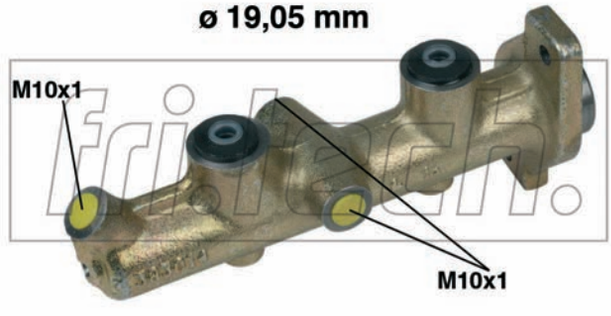

PF020

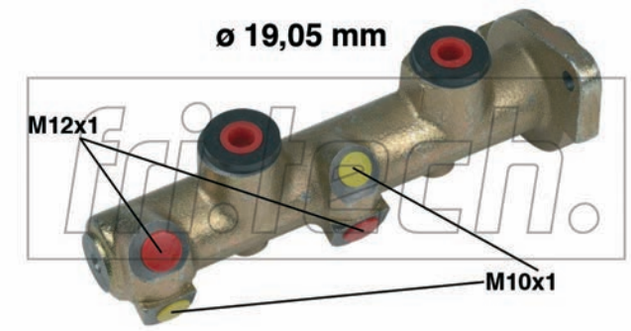

PF021

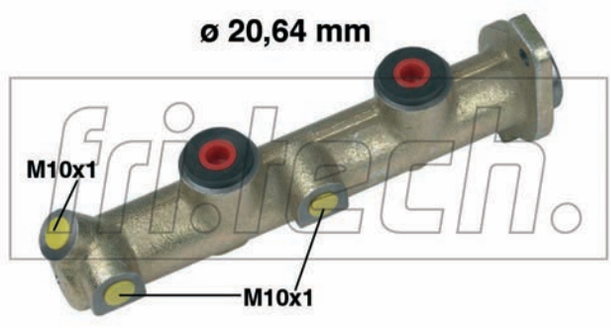

PF022

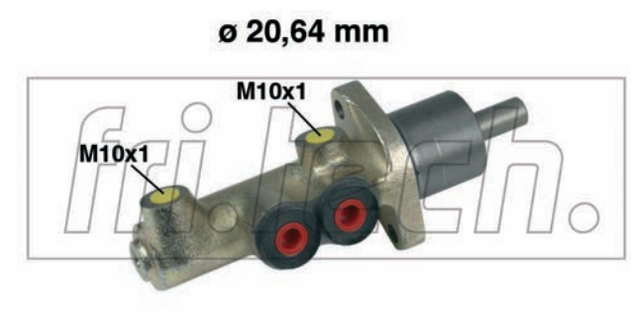

PF023

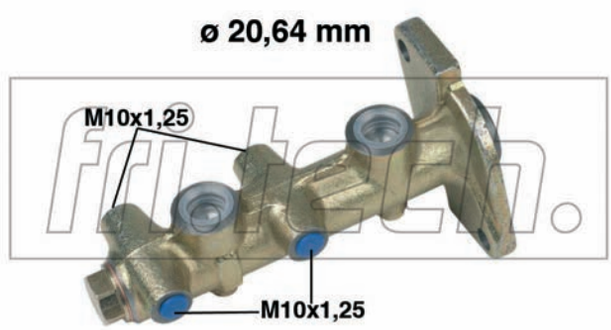

PF024

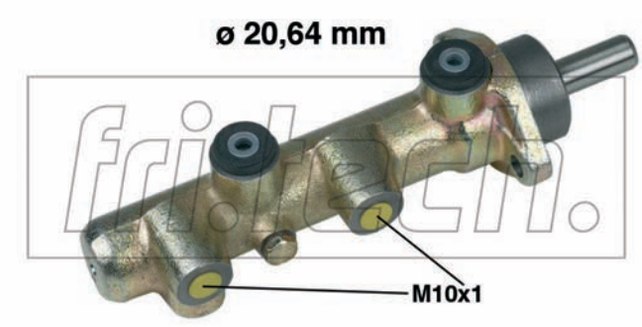

PF025

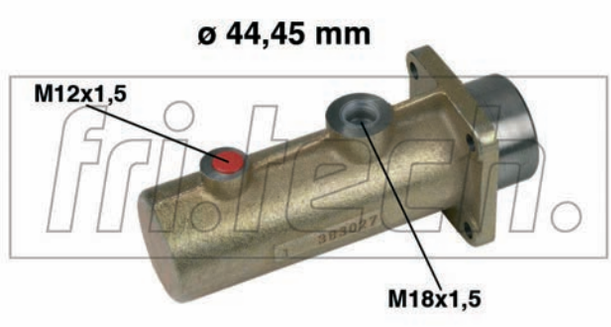

PF026

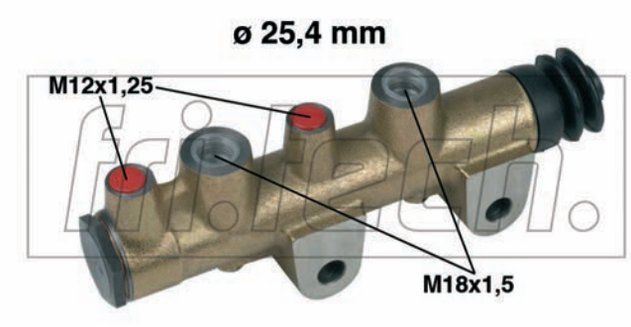

PF027

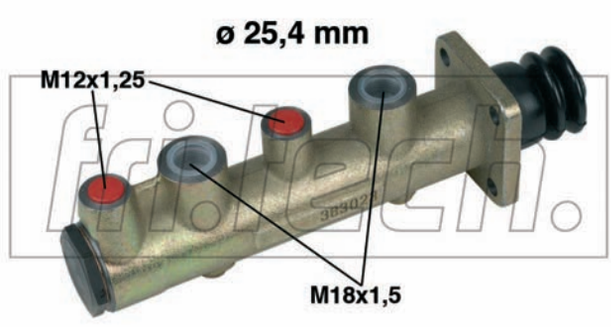

PF028

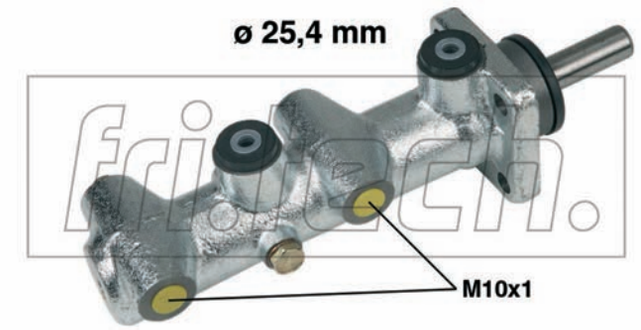

PF029

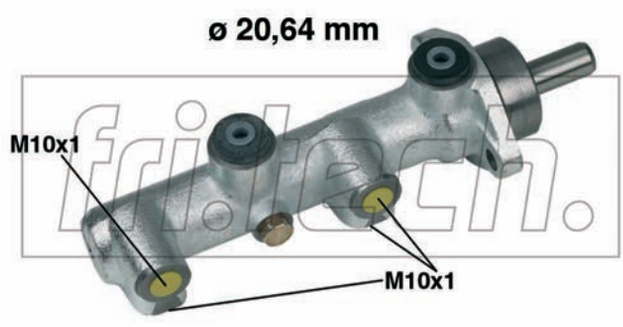

PF030

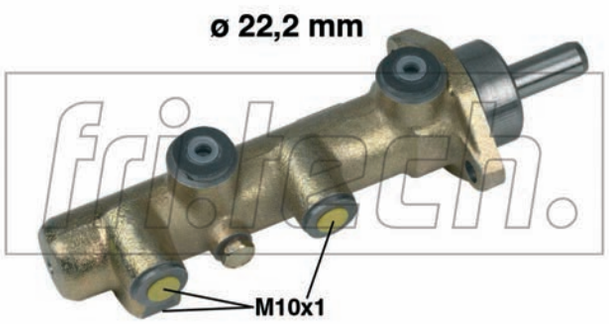

PF031

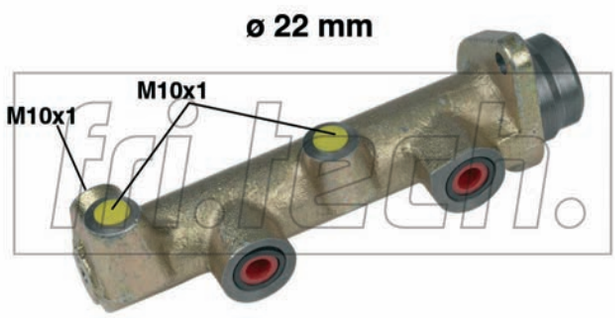

PF032

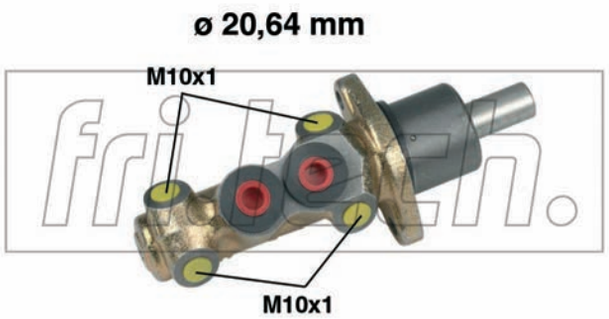

PF033

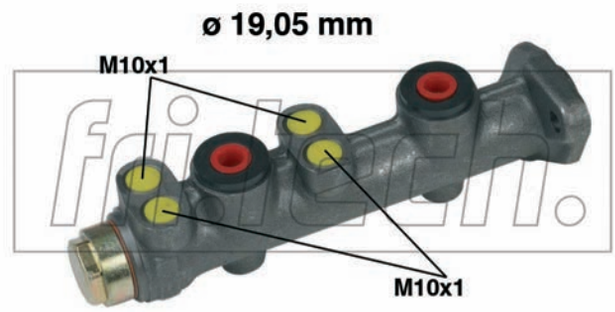

PF034

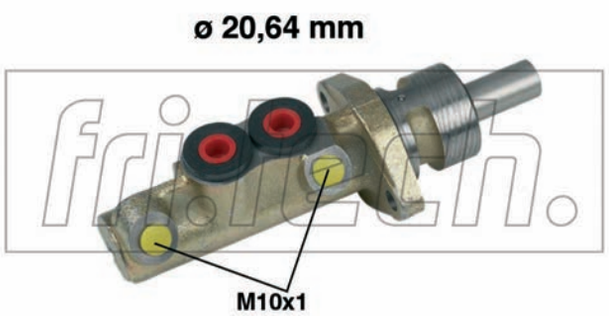

PF035

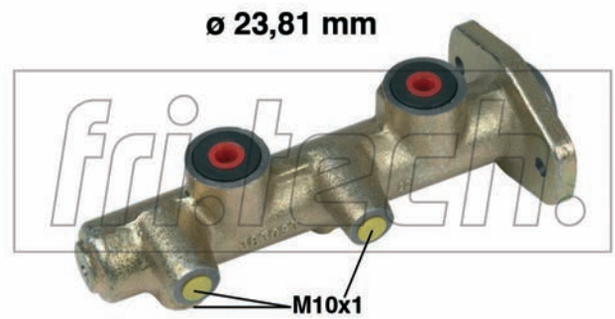

PF036

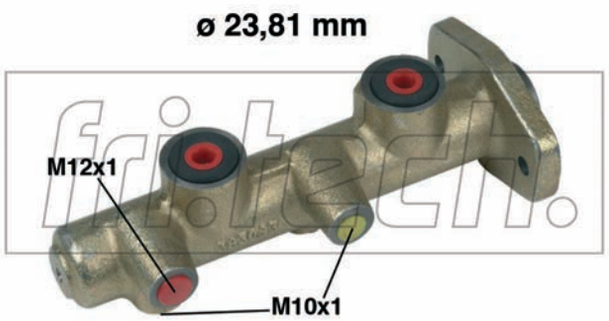

PF037

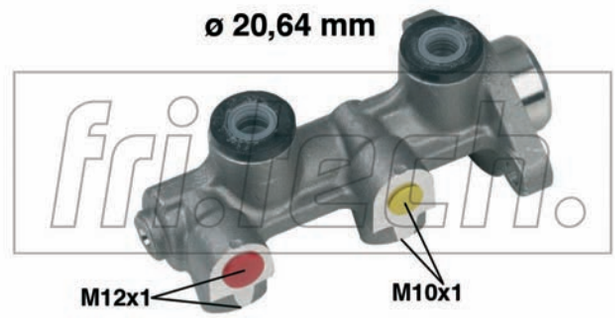

PF038

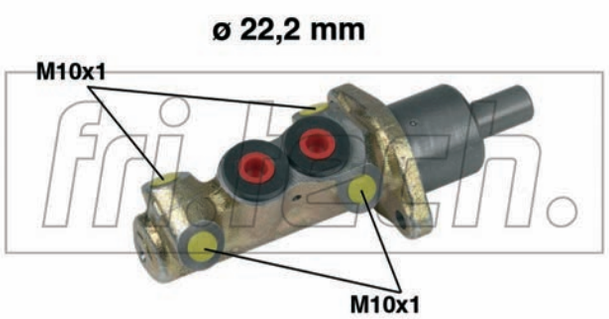

PF039

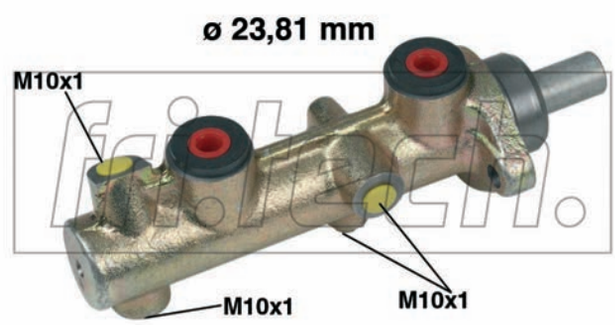

PF040

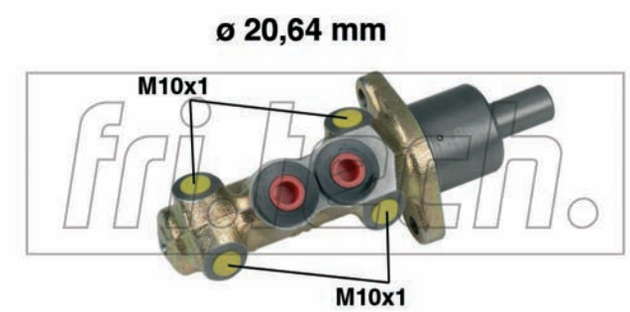

PF041

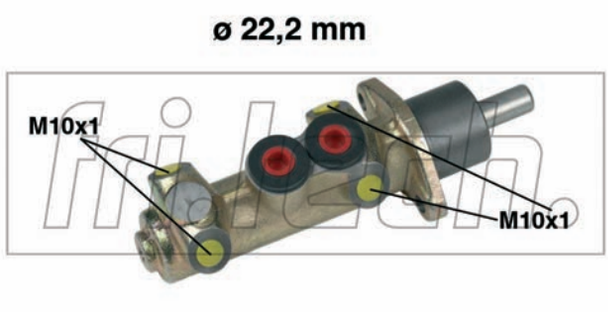

PF042

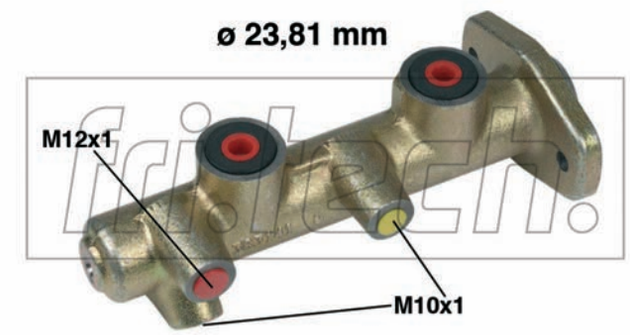

PF043

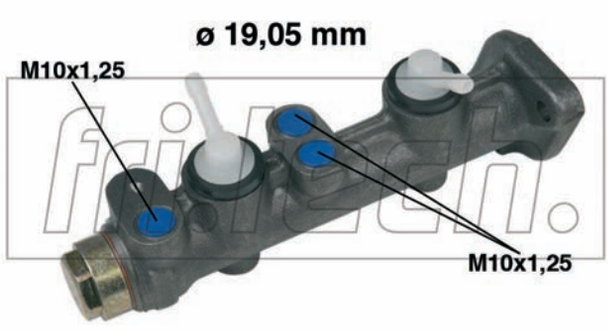

PF044

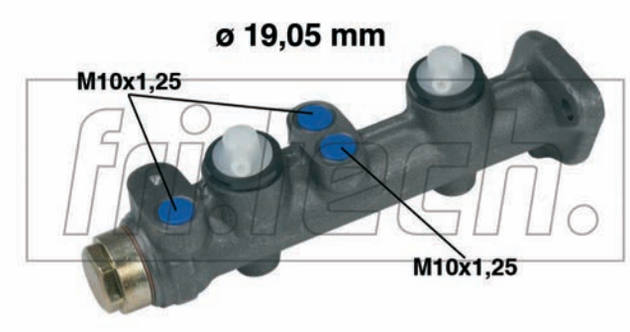

PF045

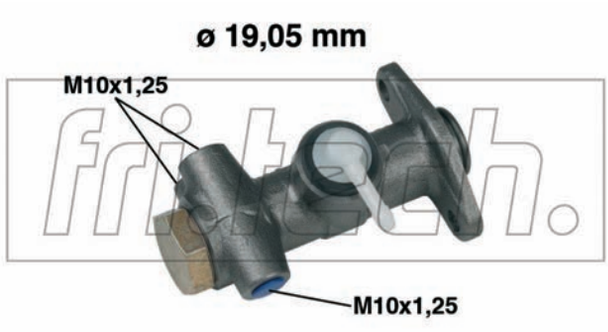

PF046

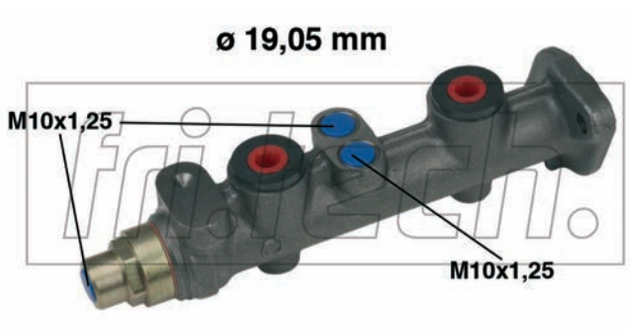

PF047

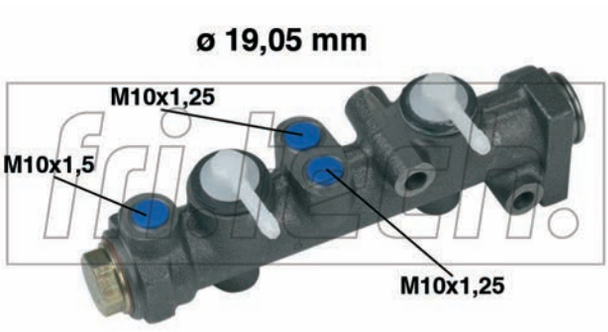

PF048

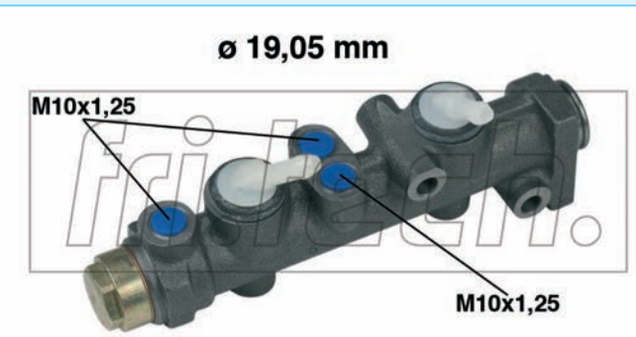

PF049

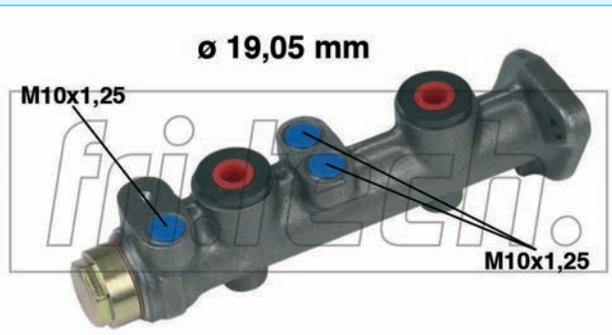

PF050

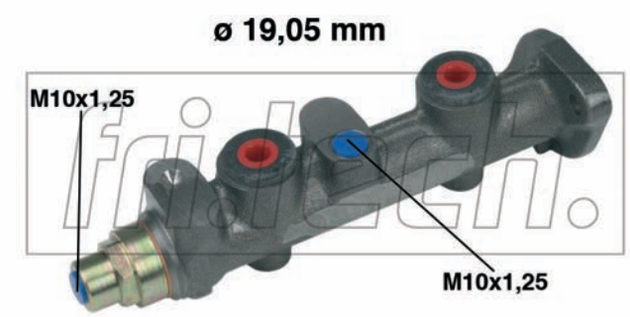

PF051

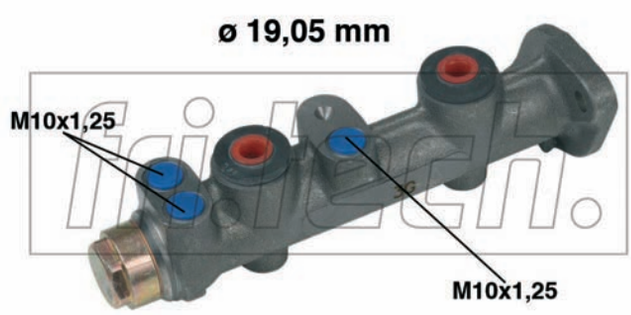

PF052

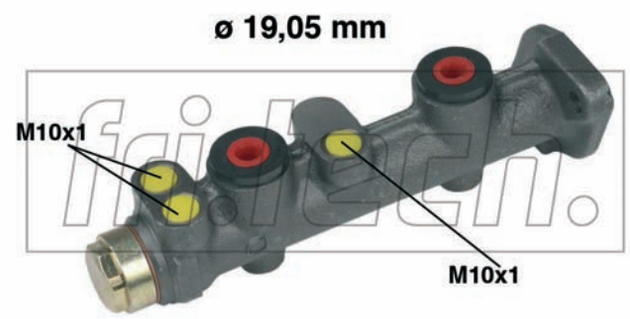

PF053

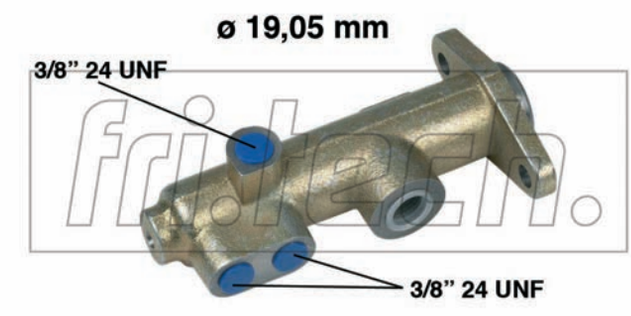

PF054

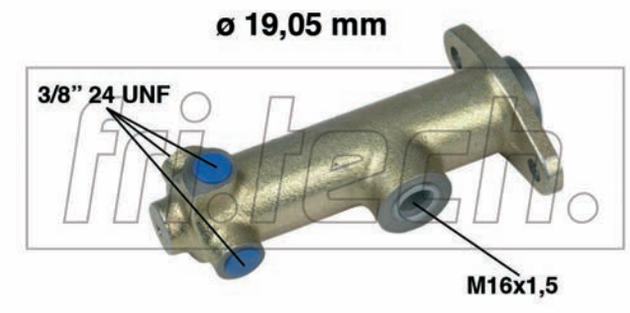

PF055

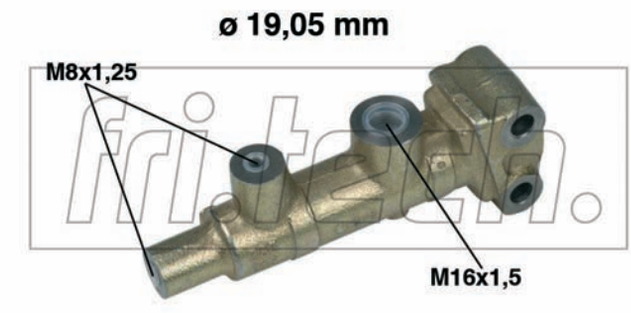

PF056

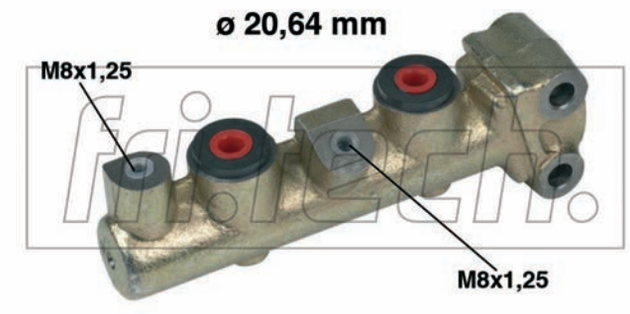

PF057

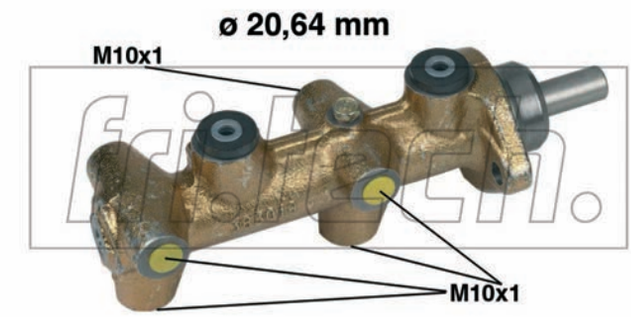

PF058

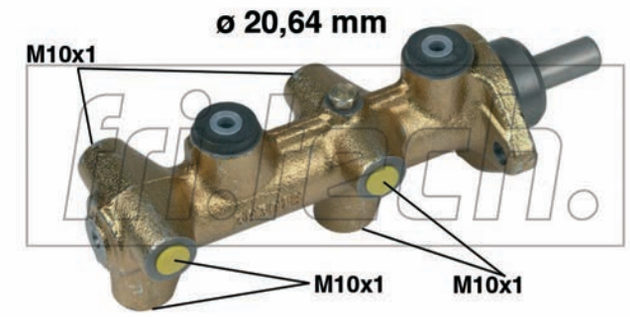

PF059

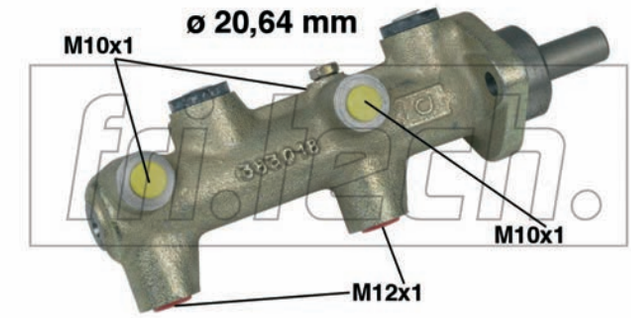

PF060

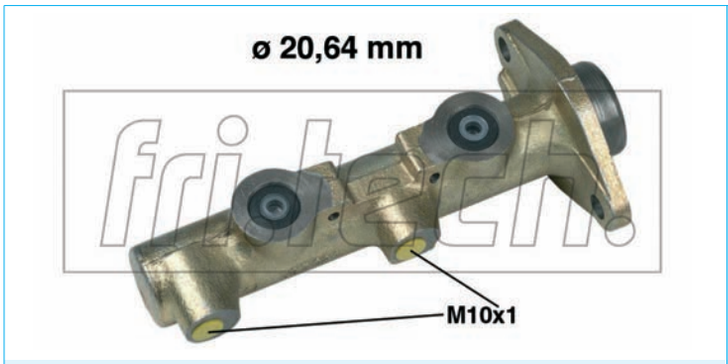

PF061

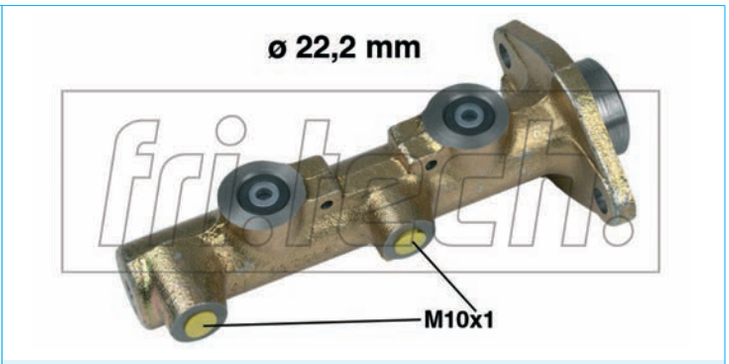

PF062

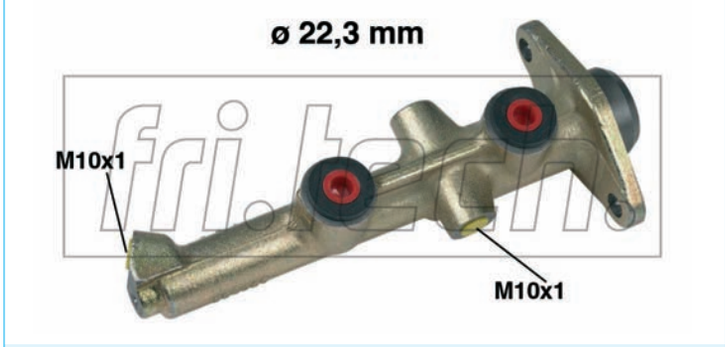

PF063

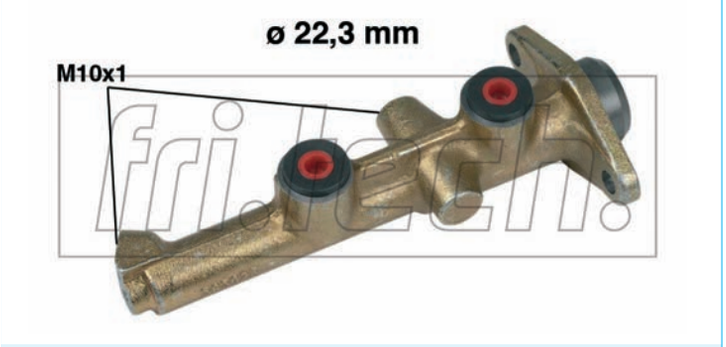

PF064

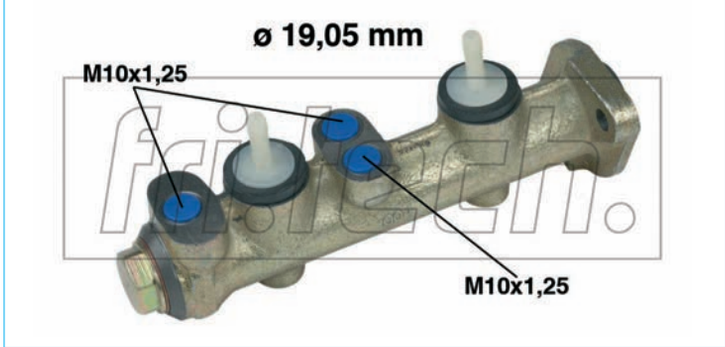

PF066

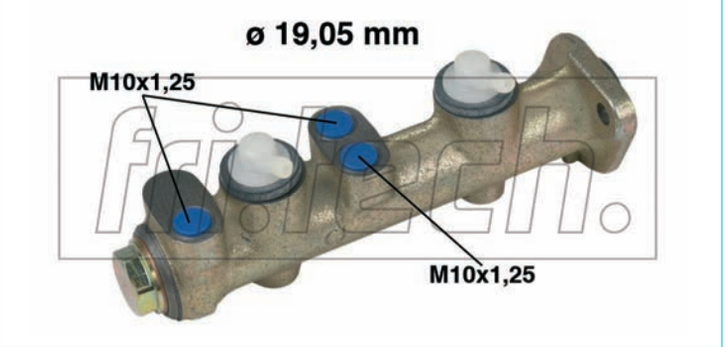

PF068

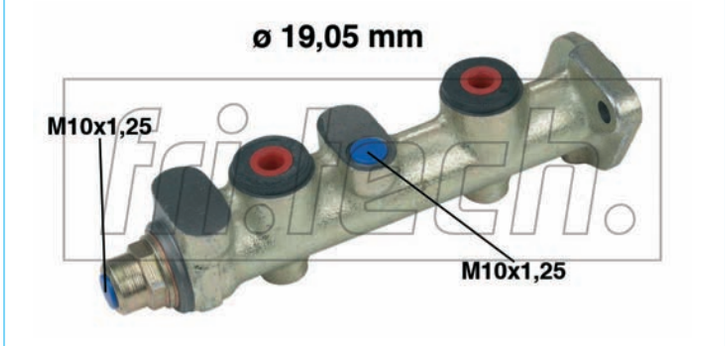

PF070

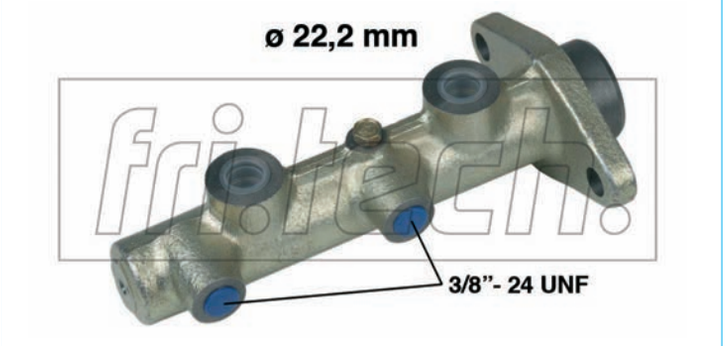

PF071

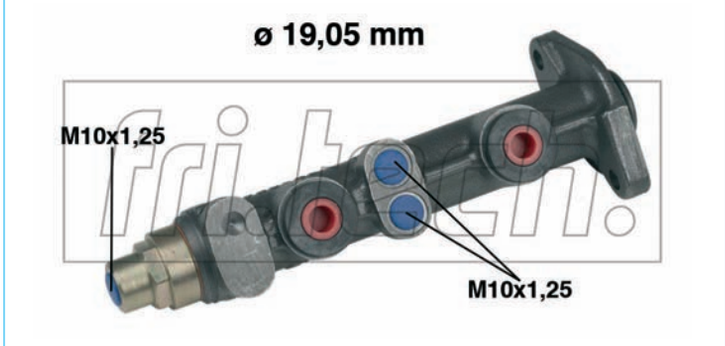

PF072

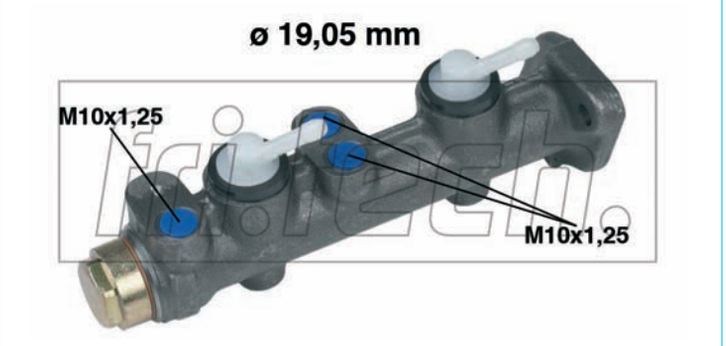

PF073

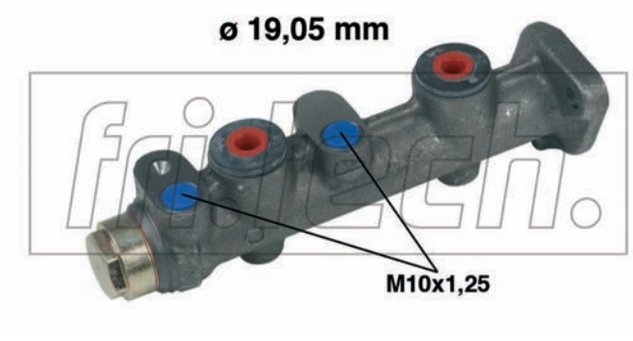

PF074

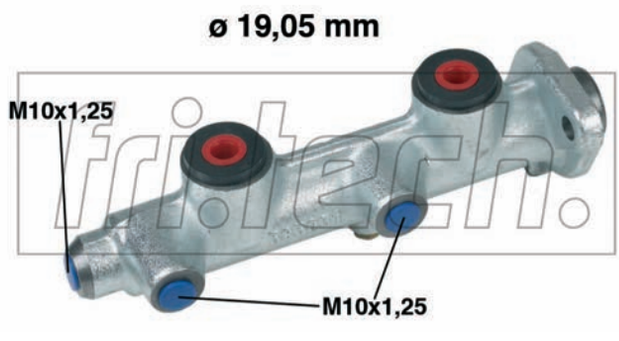

PF075

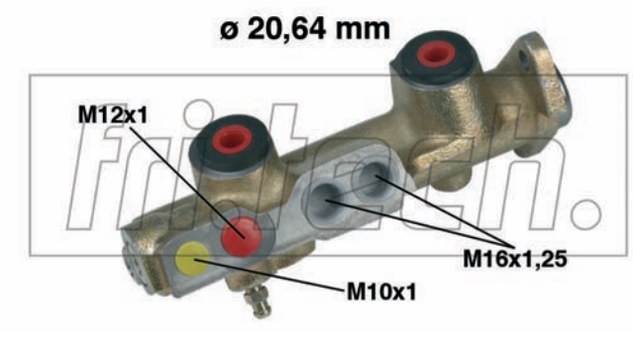

PF076

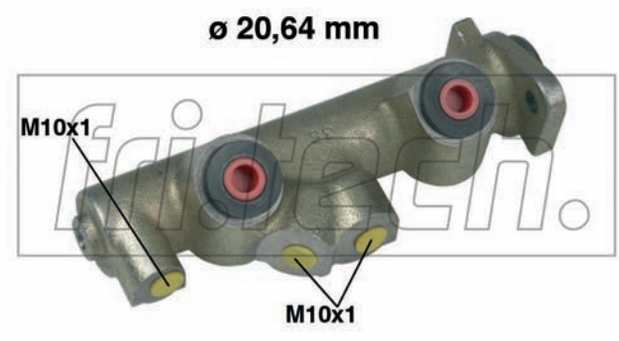

PF077

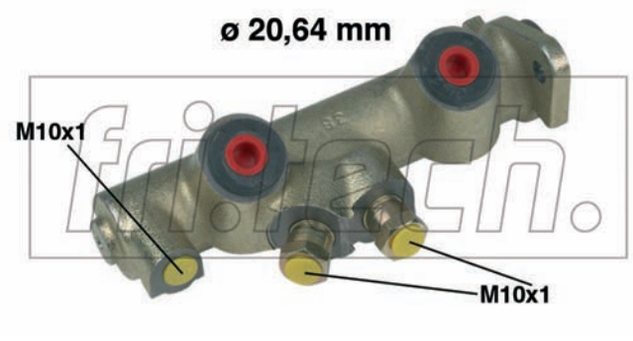

PF078

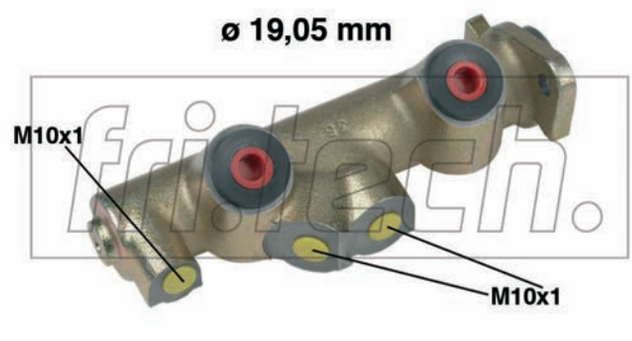

PF079

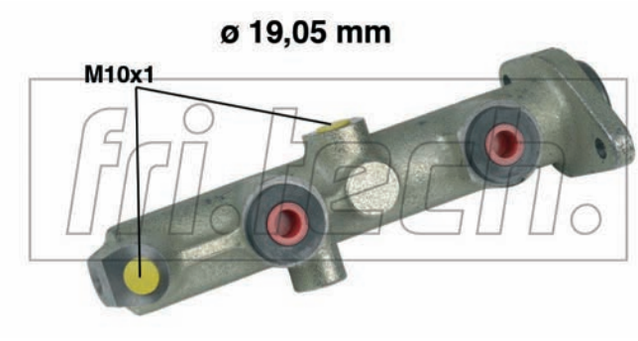

PF080

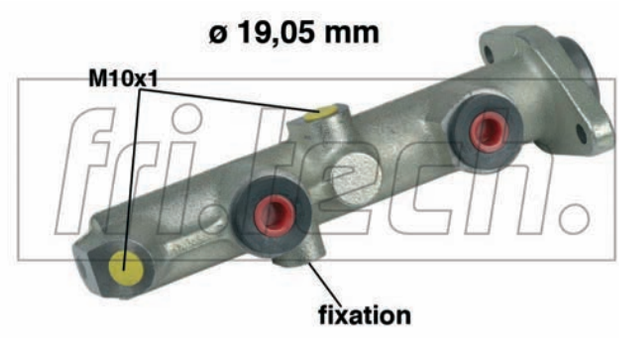

PF081

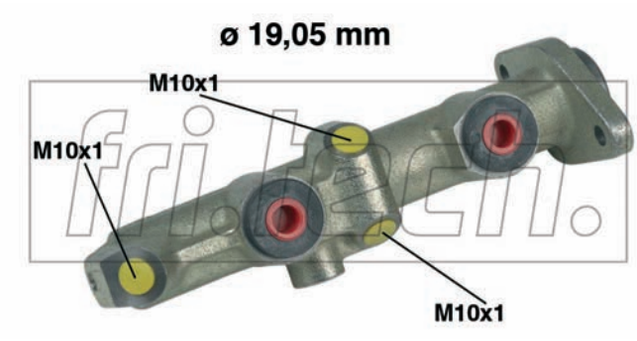

PF082

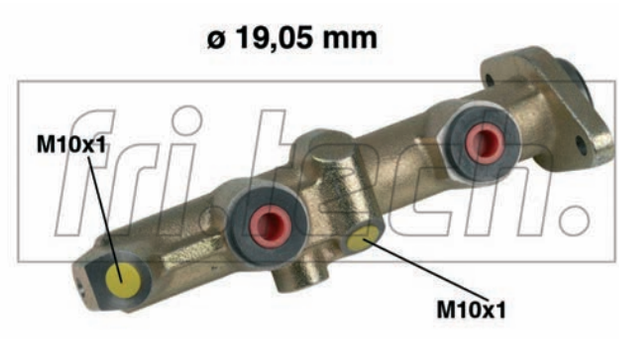

PF083

PF084

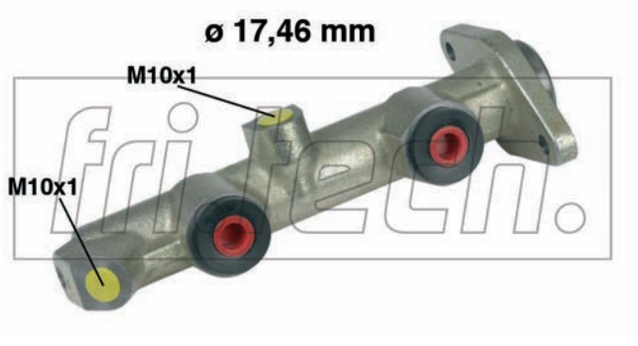

PF085

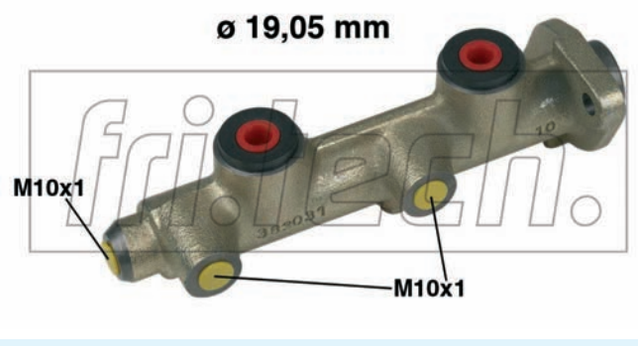

PF086

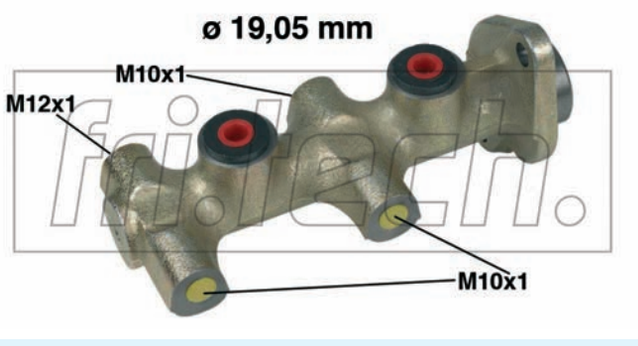

PF087

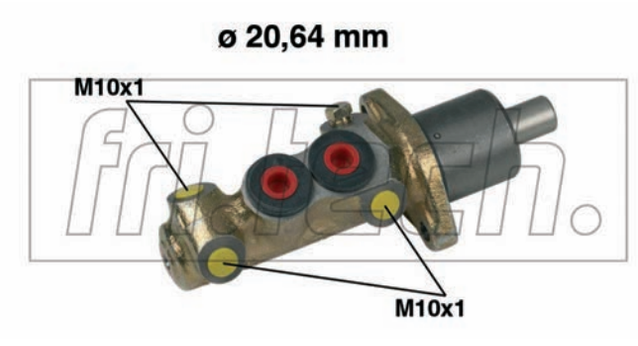

PF089

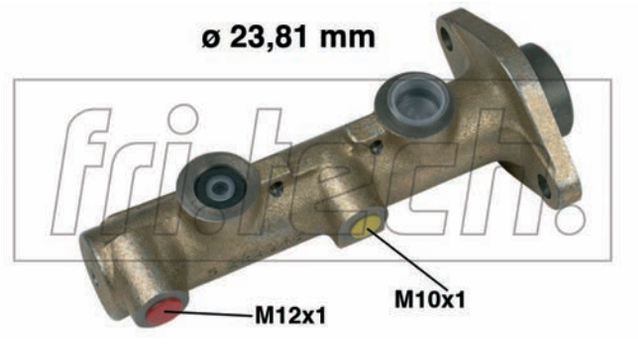

PF090

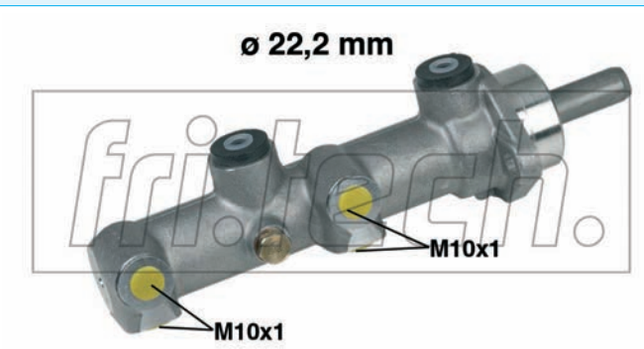

PF091

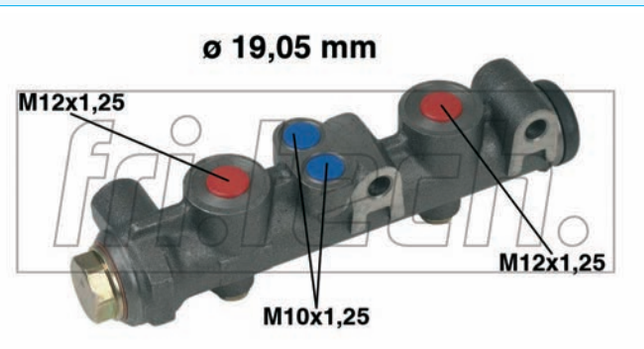

PF092

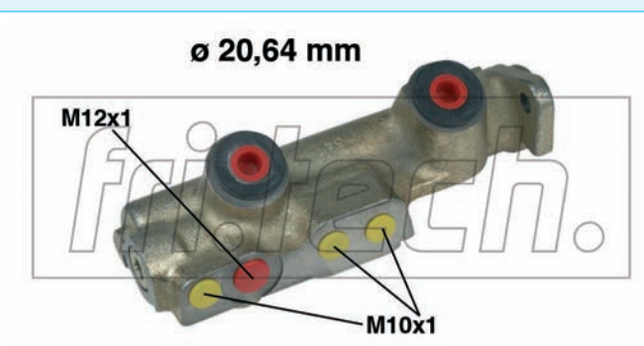

PF093

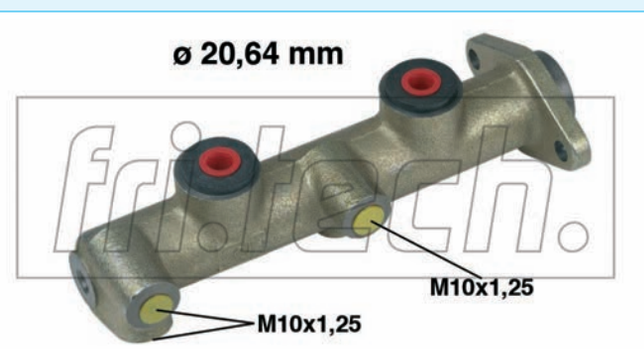

PF094

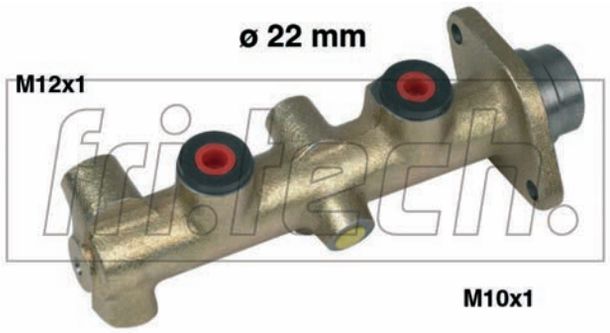

PF095

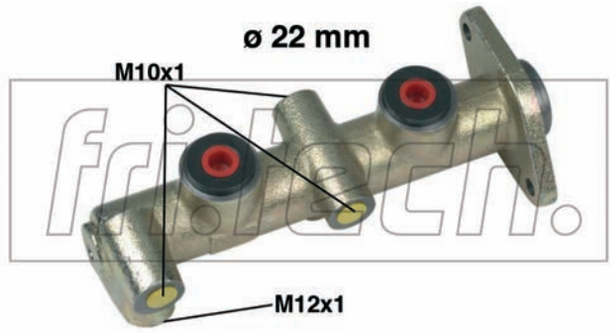

PF096

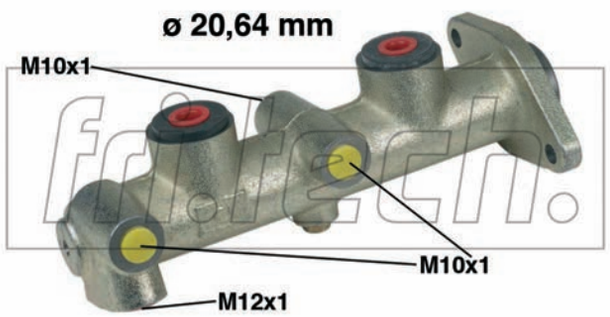

PF097

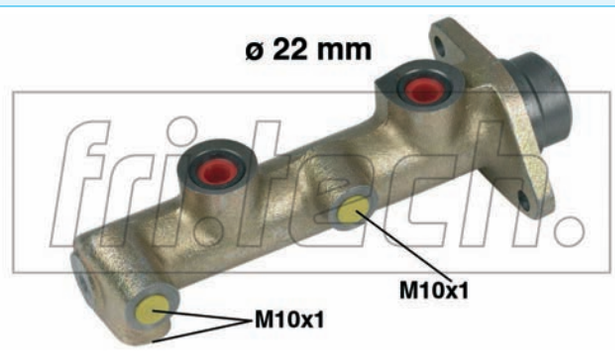

PF098

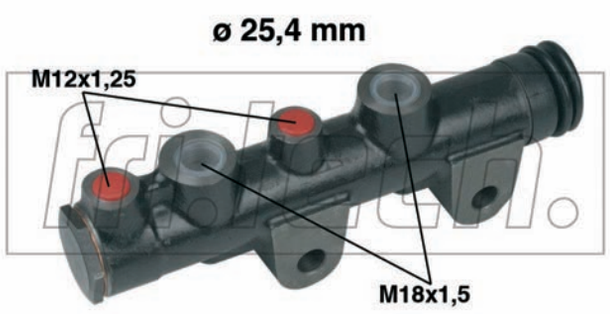

PF099

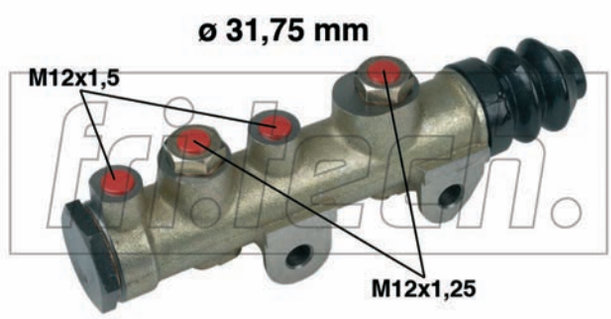

PF100

PF101

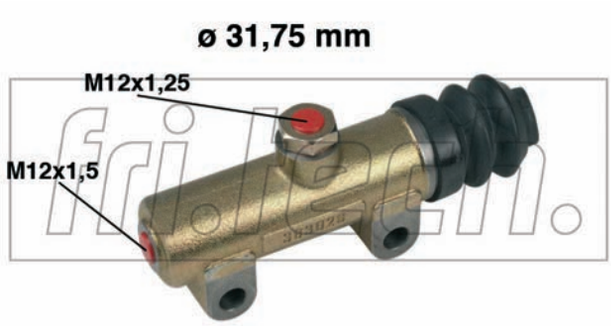

PF102

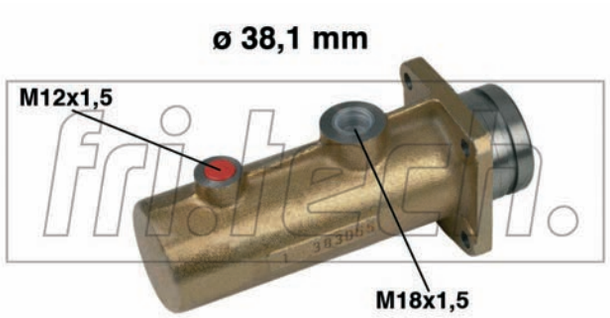

PF103

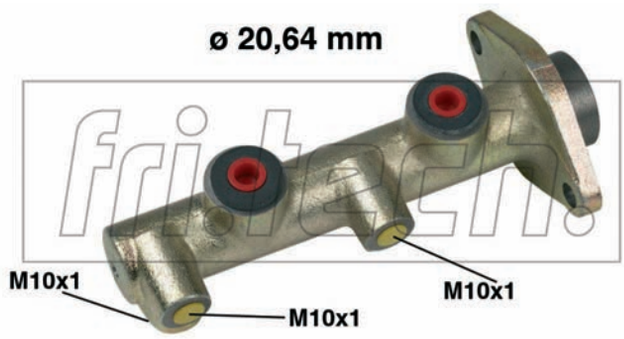

PF104

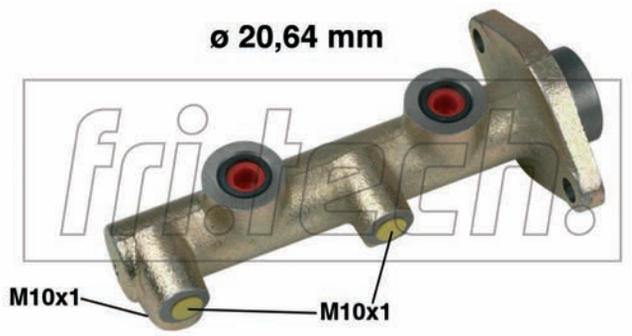

PF105

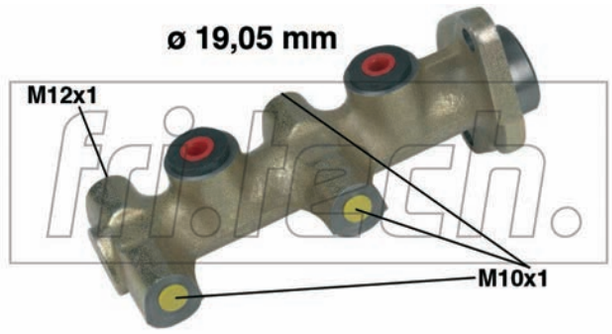

PF107

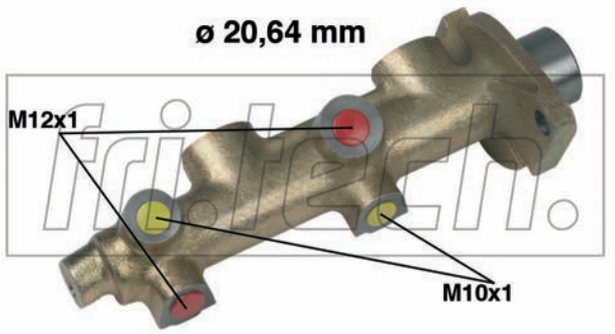

PF108

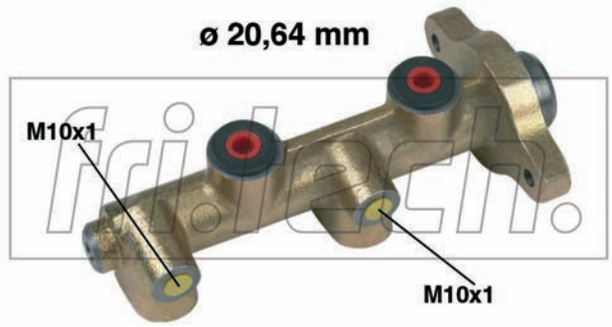

PF109

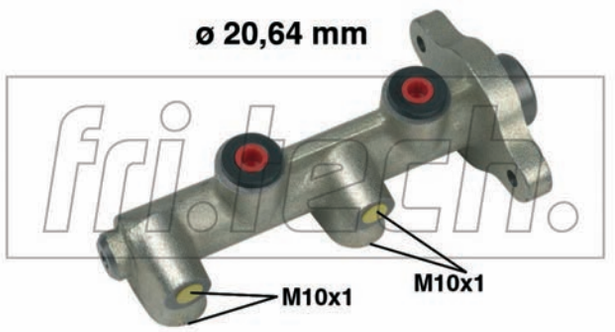

PF110

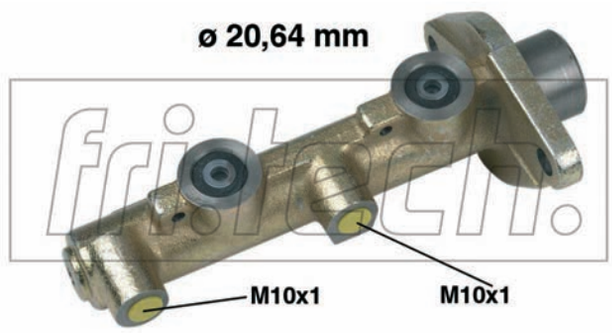

PF111

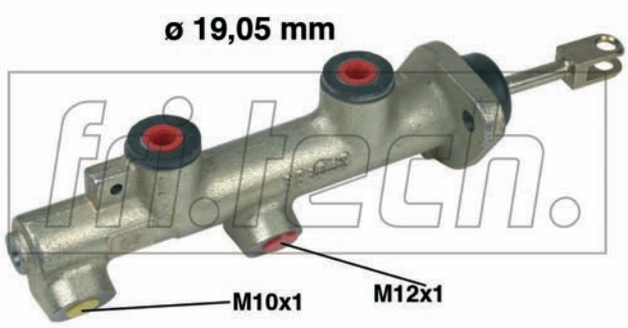

PF112

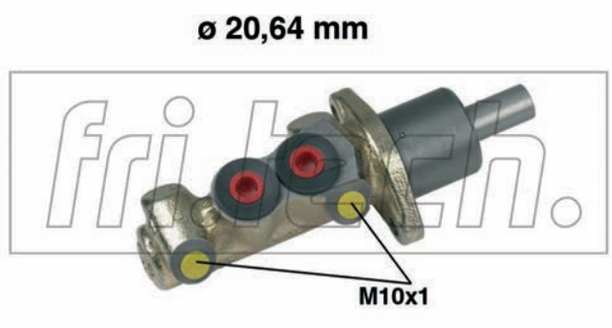

PF114

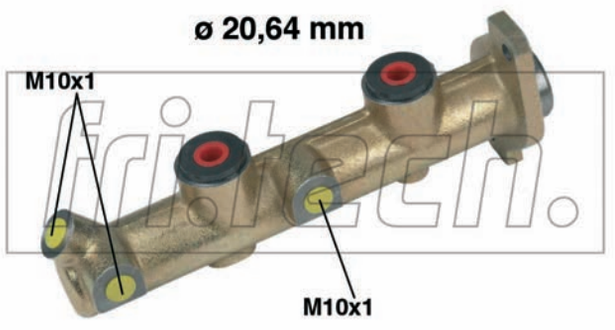

PF115

PF116

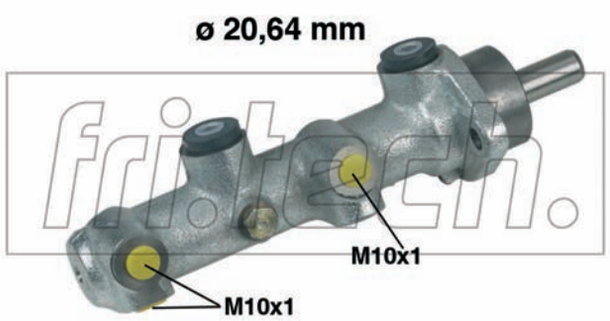

PF117

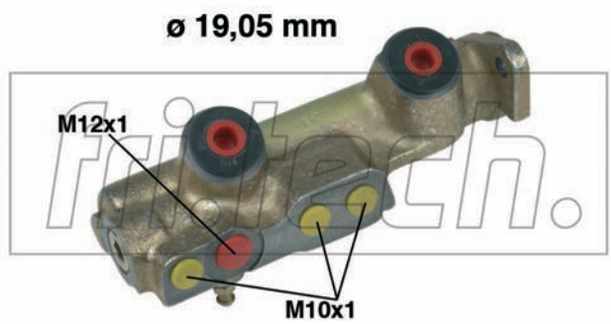

PF118

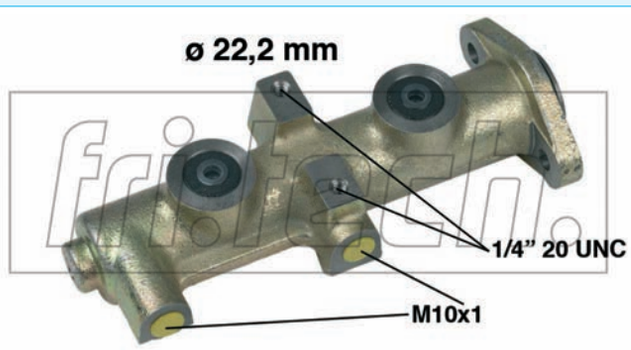

PF119

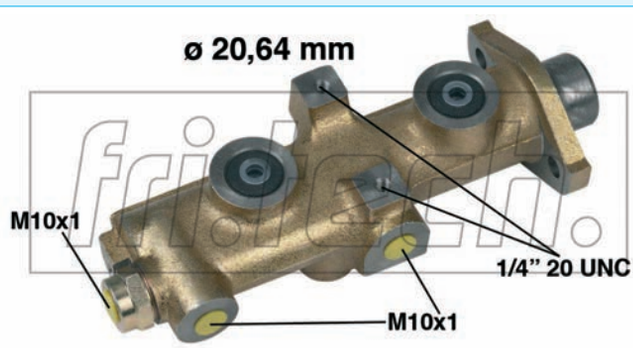

PF120

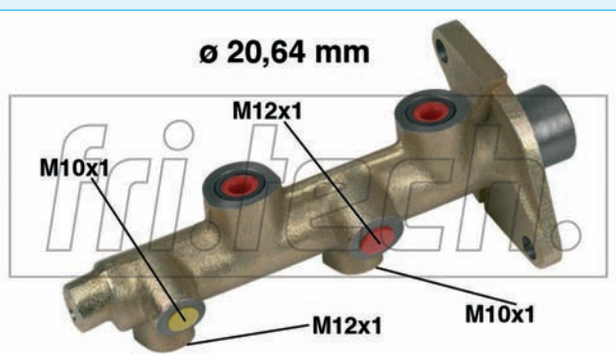

PF121

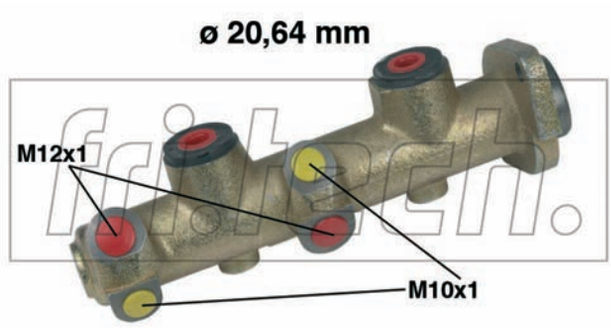

PF122

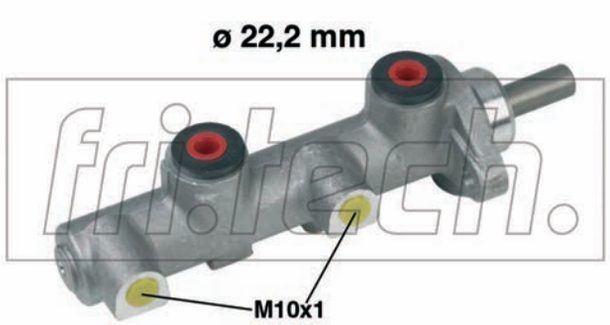

PF123

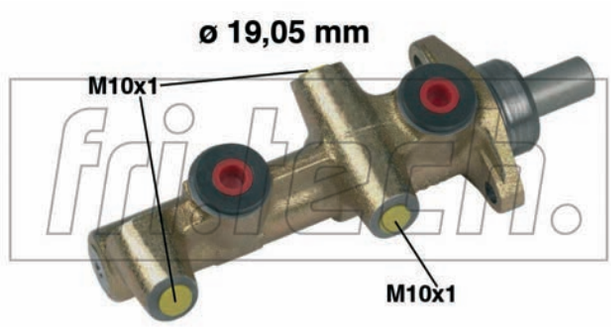

PF124

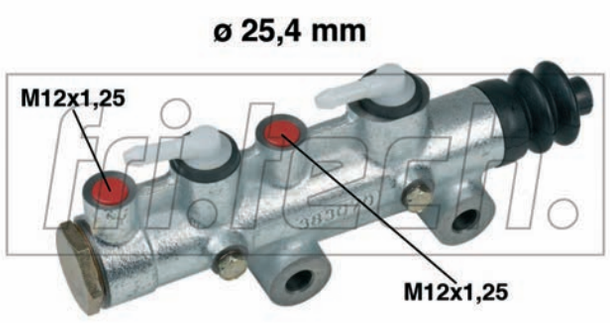

PF125

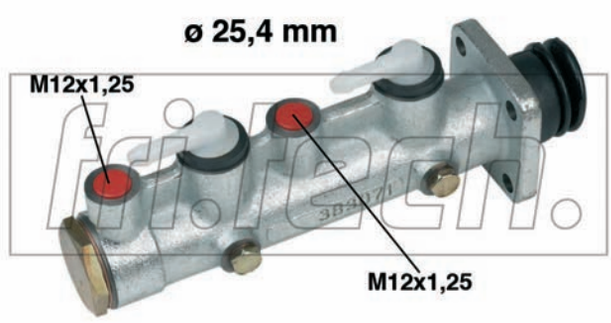

PF126

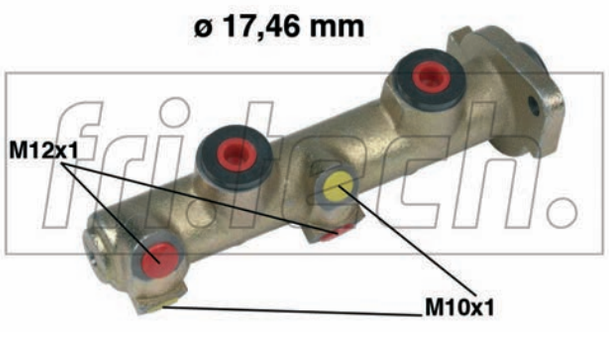

PF127

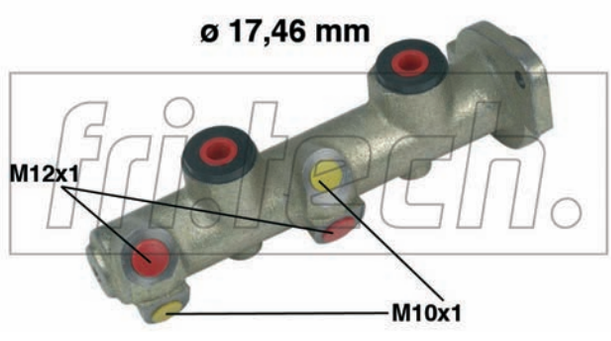

PF128

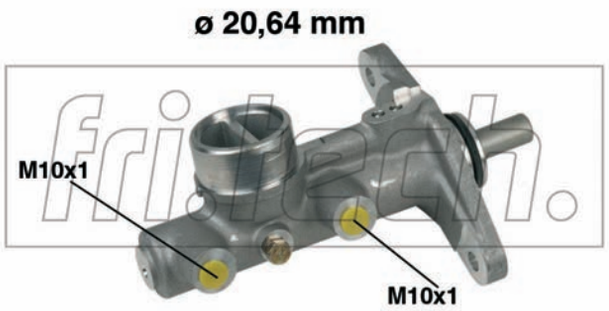

PF130

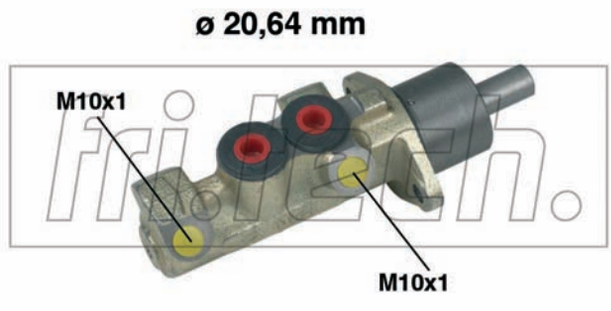

PF131

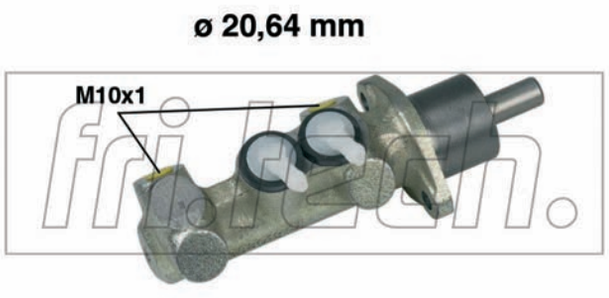

PF132

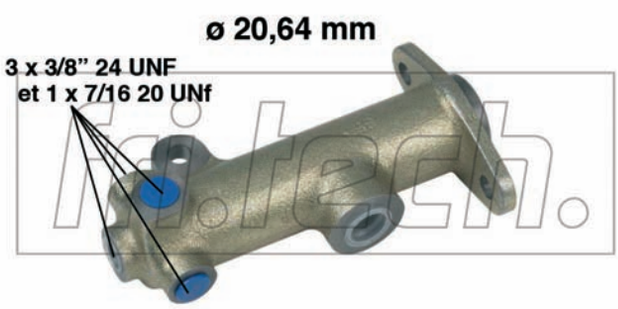

PF133

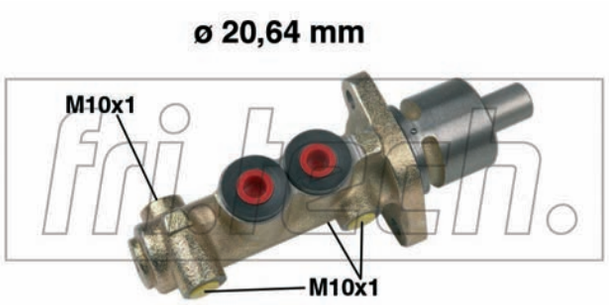

PF134

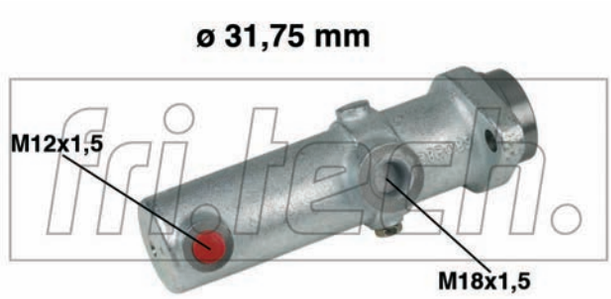

PF135

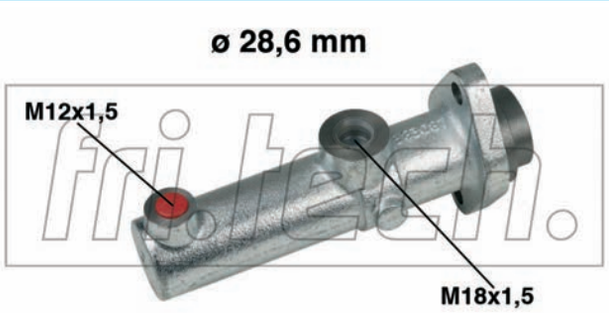

PF136

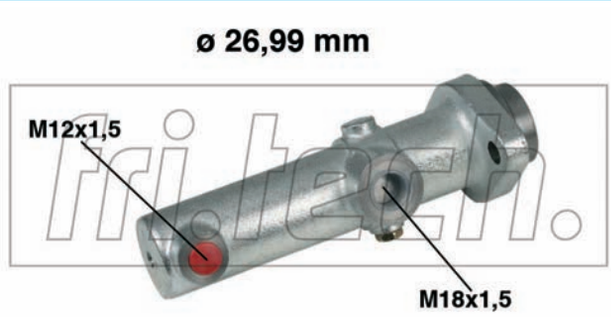

PF137

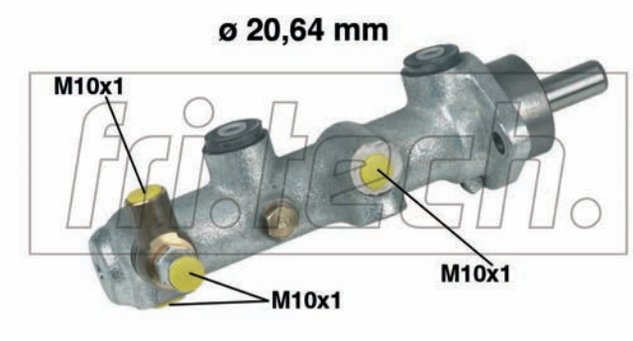

PF138

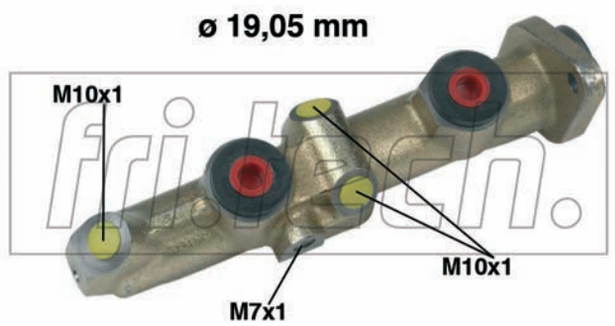

PF139

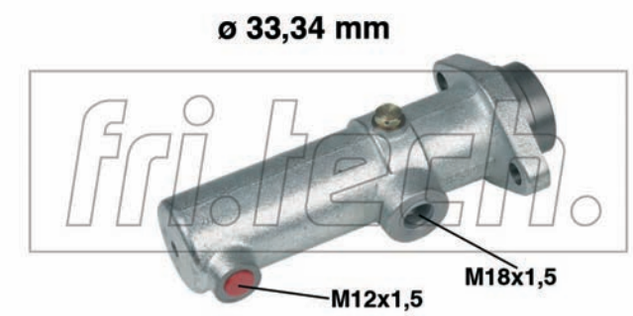

PF140

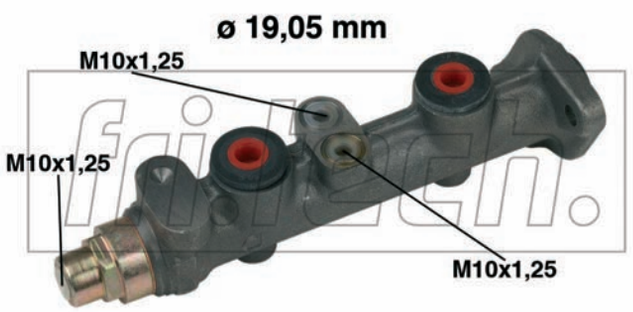

PF141

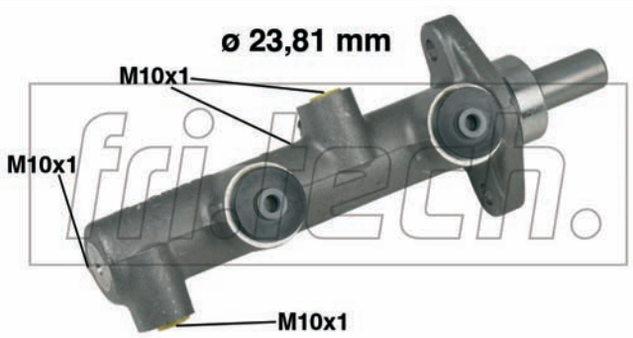

PF142

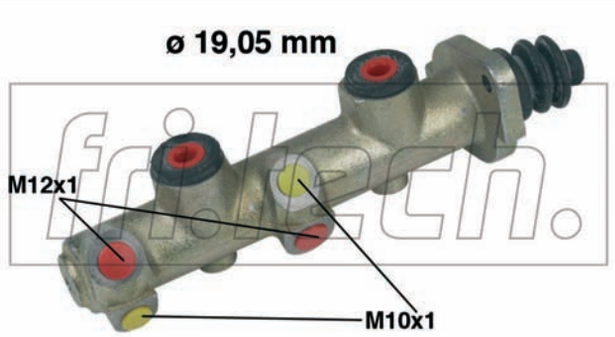

PF143

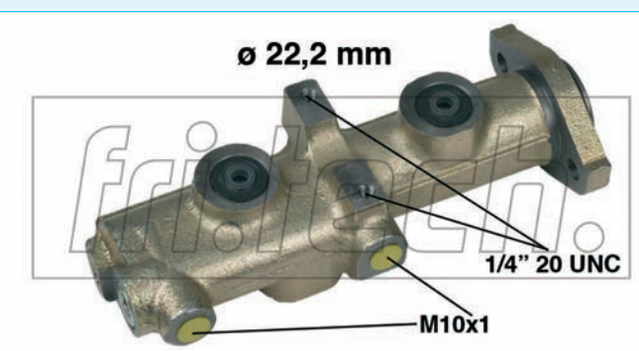

PF144

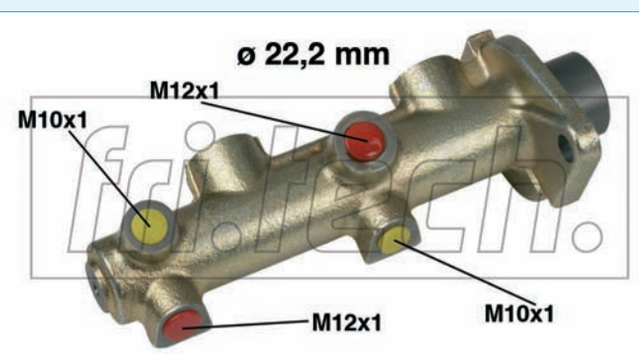

PF145

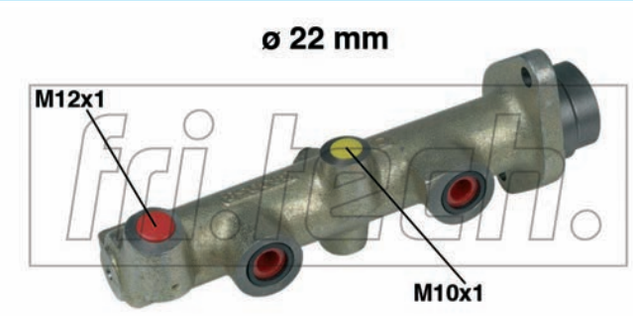

PF146

PF147

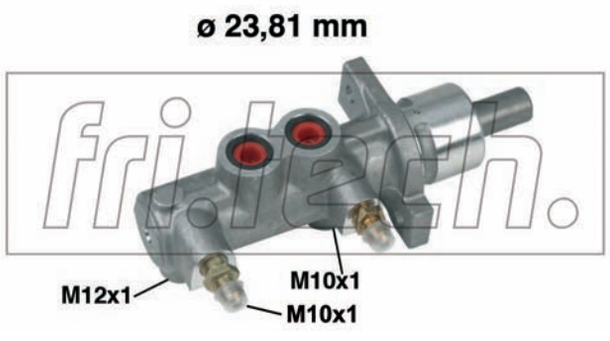

PF148

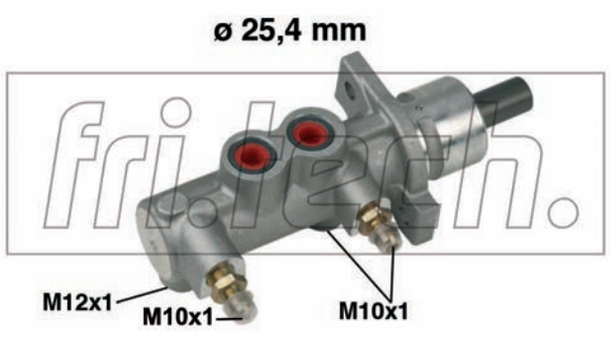

PF149

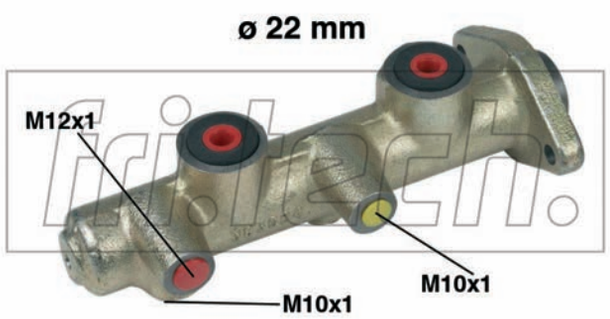

PF150

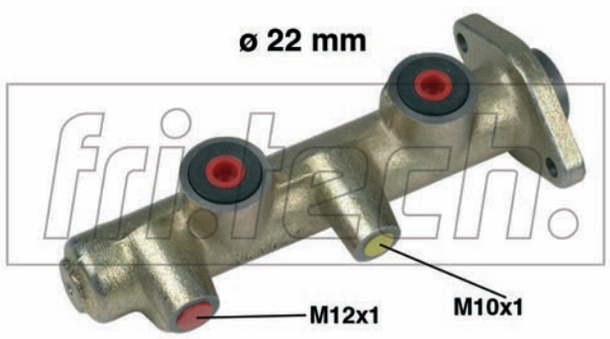

PF151

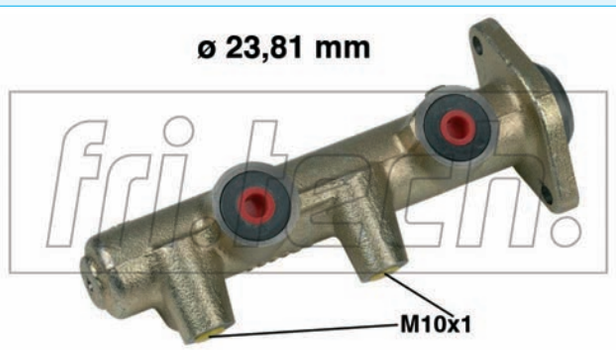

PF152

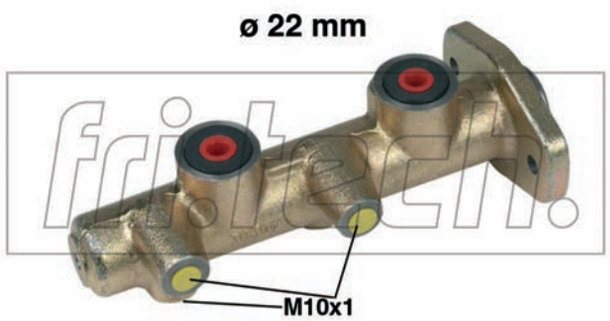

PF153

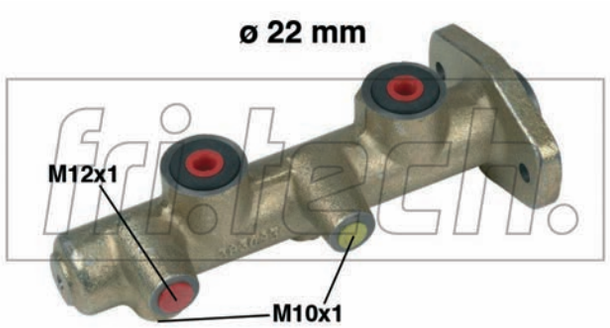

PF154

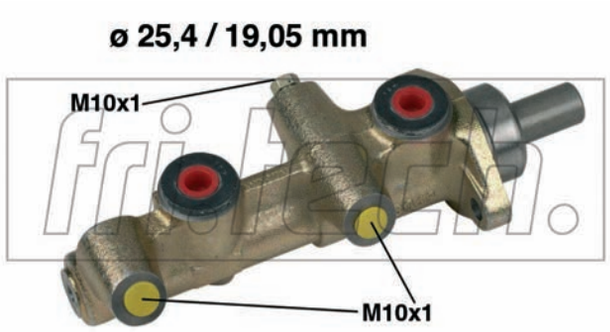

PF155

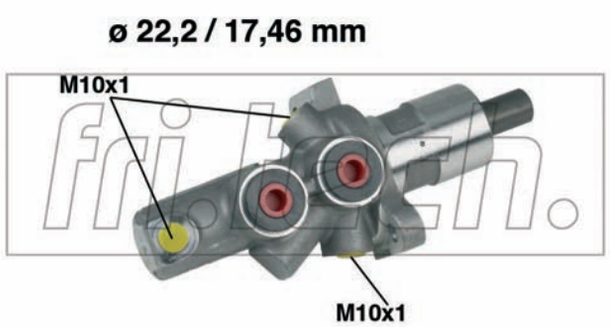

PF156

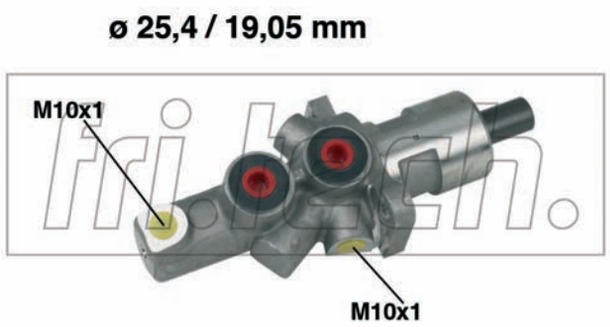

PF157

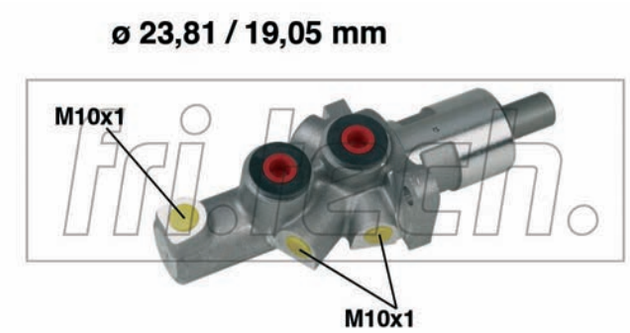

PF158

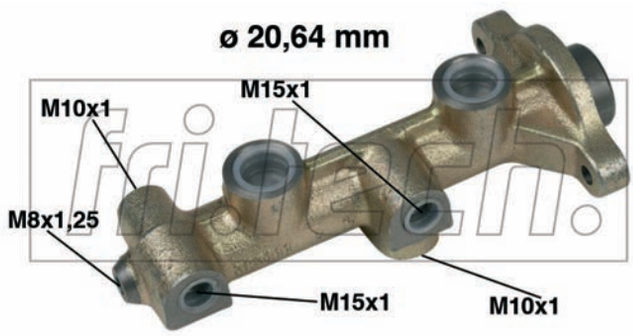

PF159

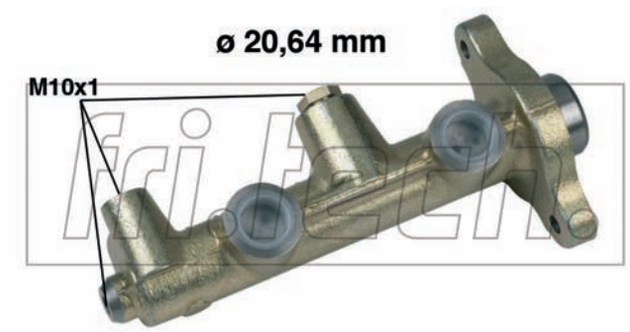

PF160

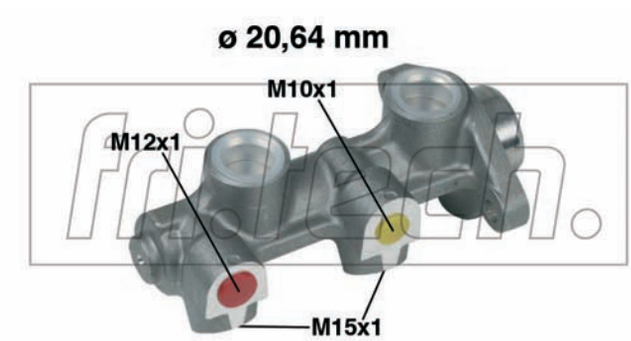

PF161

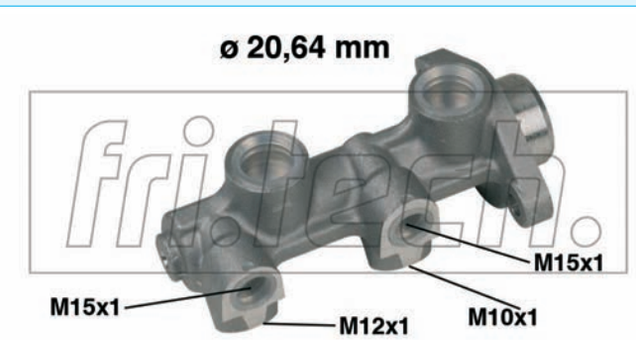

PF162

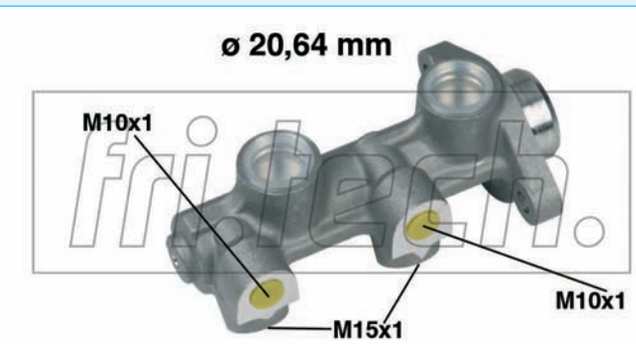

PF163

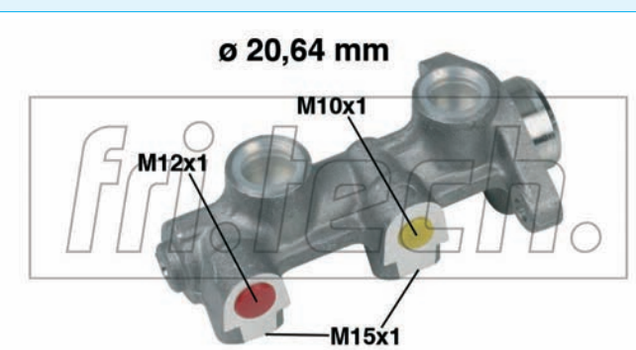

PF164

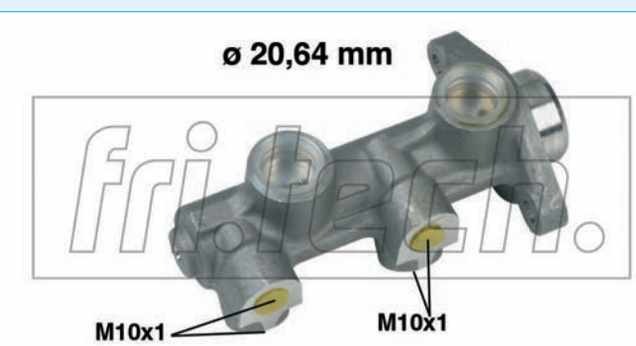

PF165

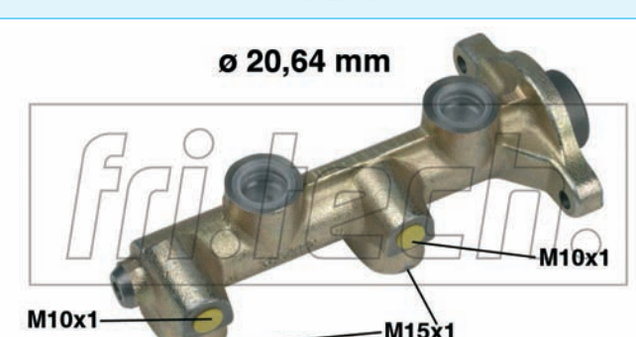

PF166

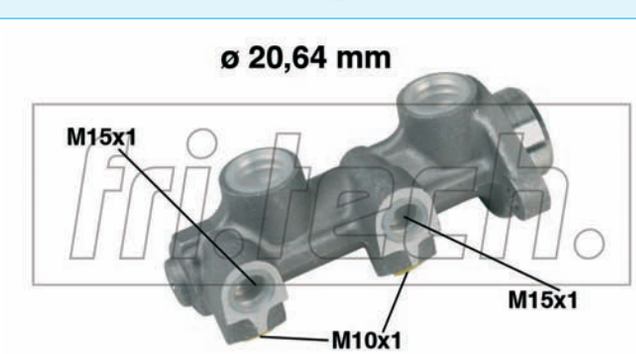

PF167

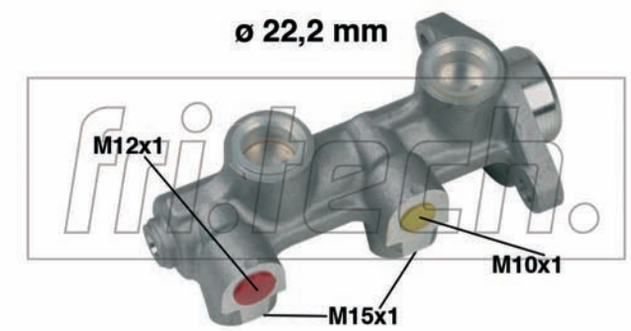

PF168

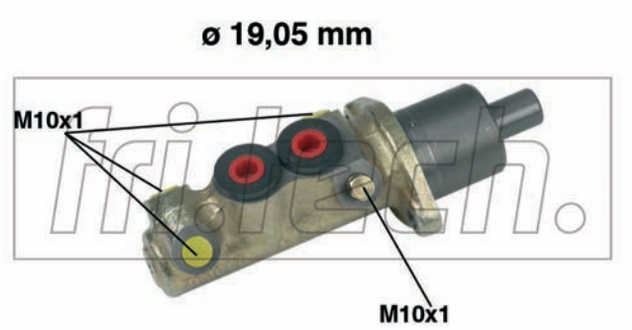

PF169

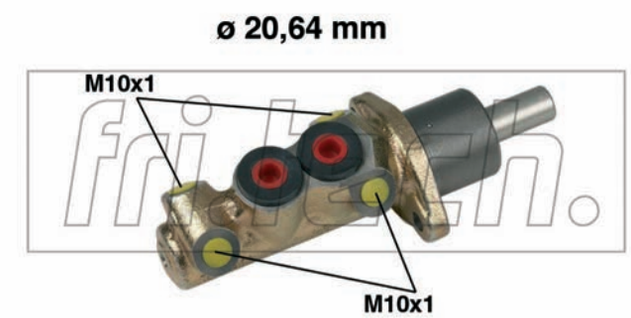

PF170

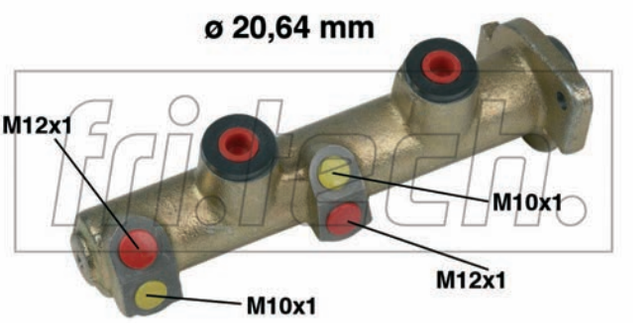

PF171

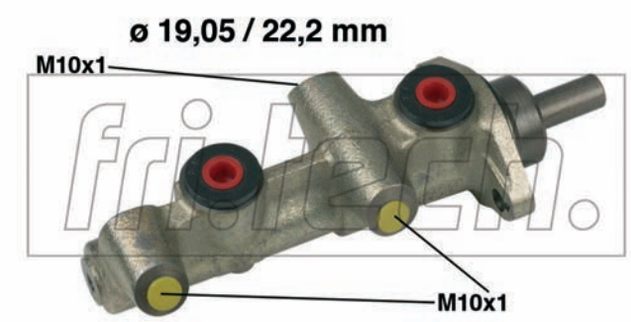

PF172

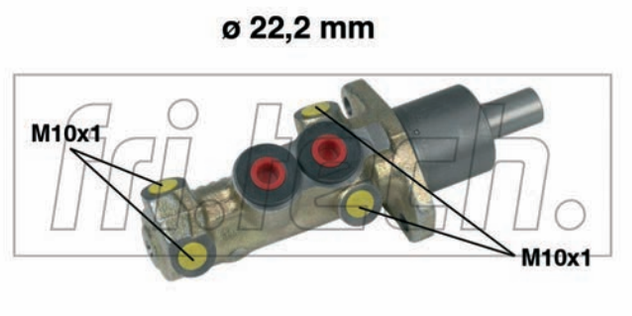

PF173

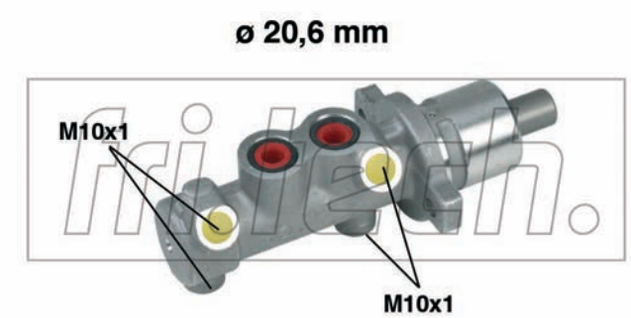

PF174

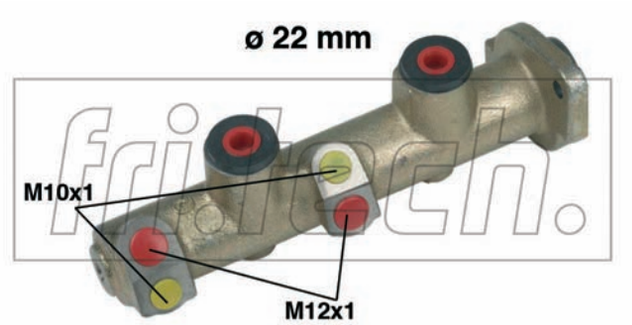

PF175

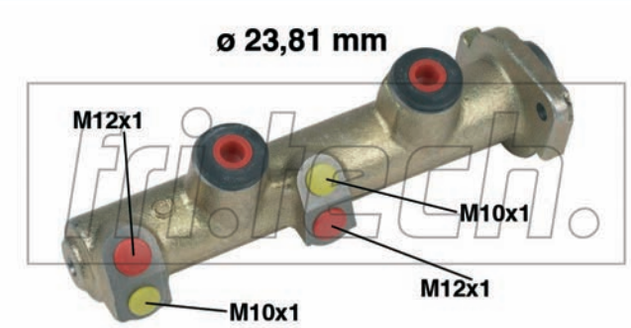

PF176

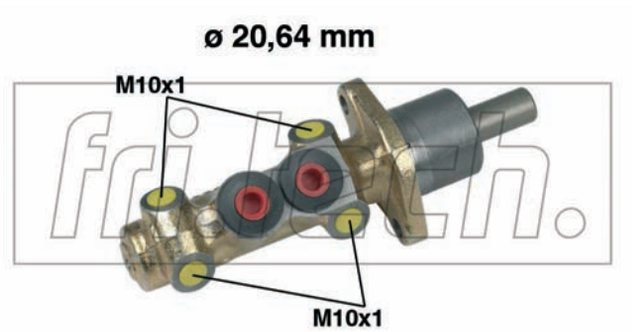

PF177

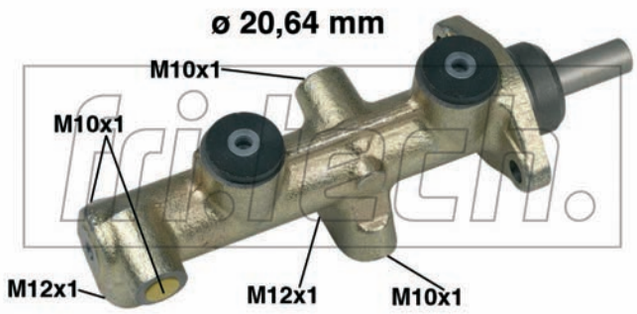

PF178

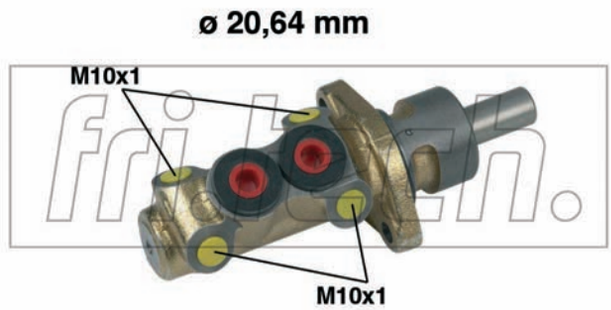

PF179

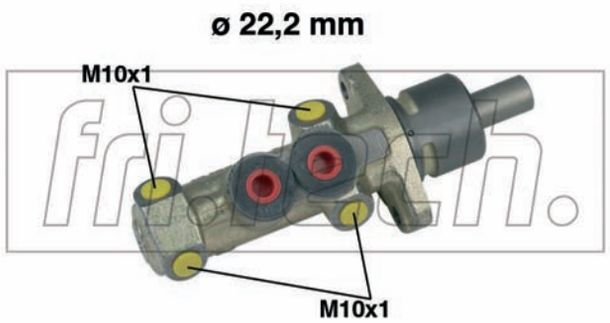

PF180

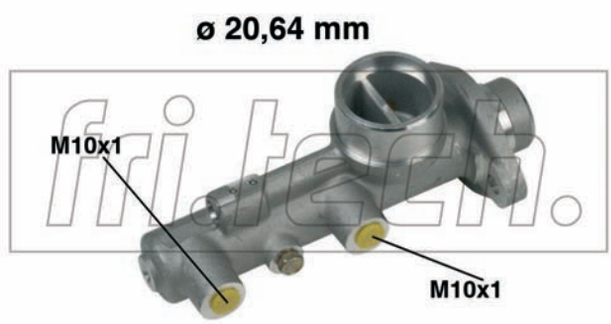

PF181

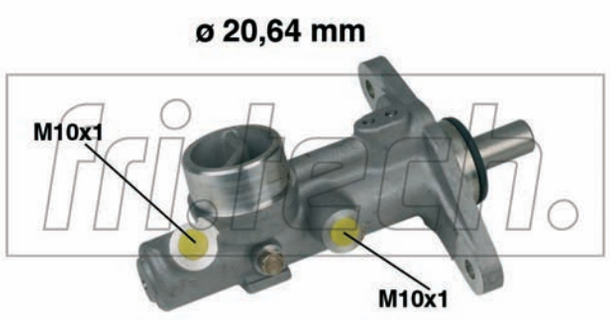

PF182

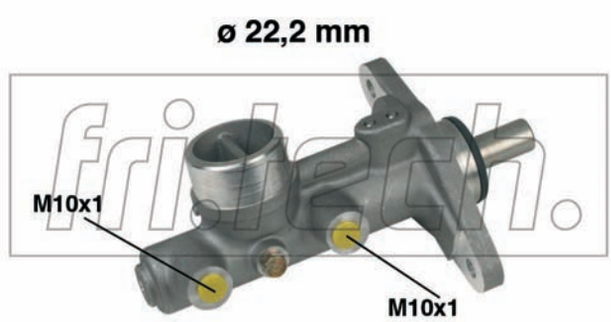

PF184

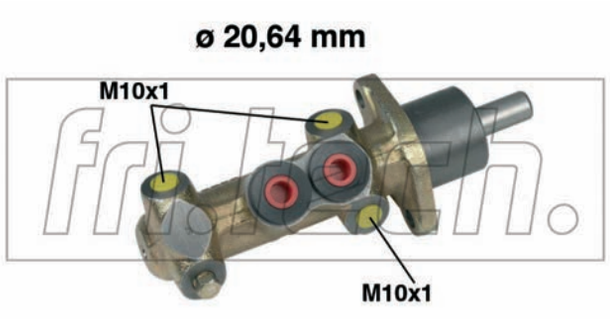

PF185

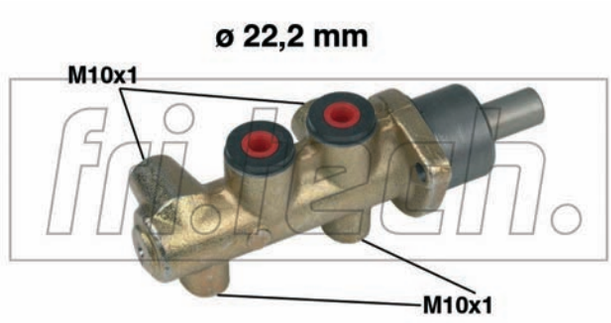

PF186

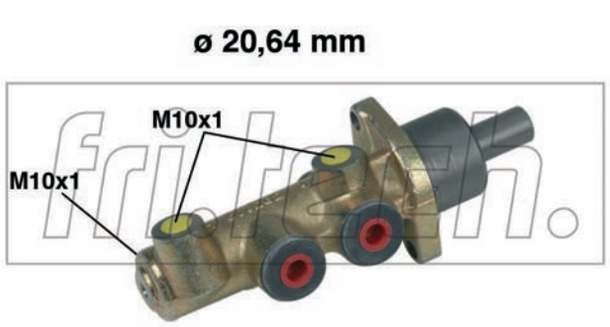

PF187

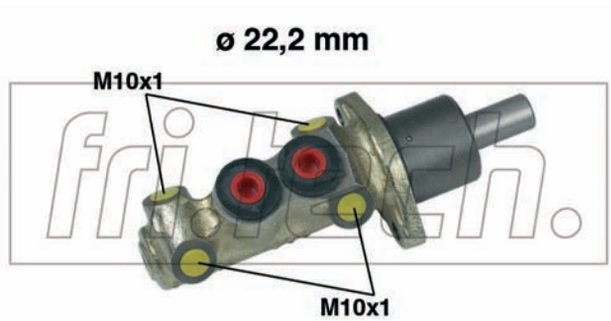

PF188

ø 22,2 mm

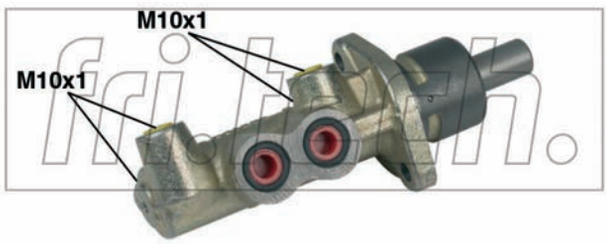

PF189

ø 20,64 mm

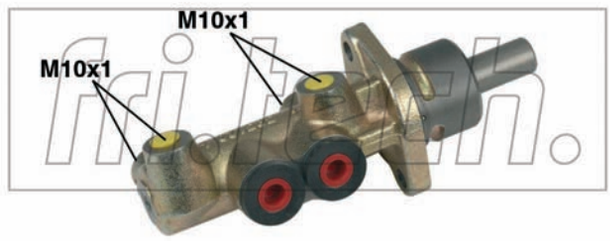

PF190

ø 23,81 mm

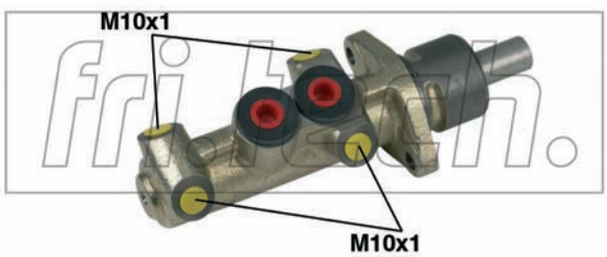

PF191

ø 23,81 mm

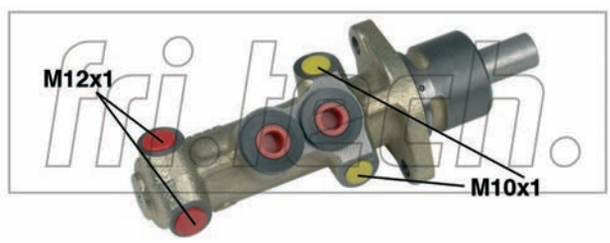

PF192

ø 20,64 mm

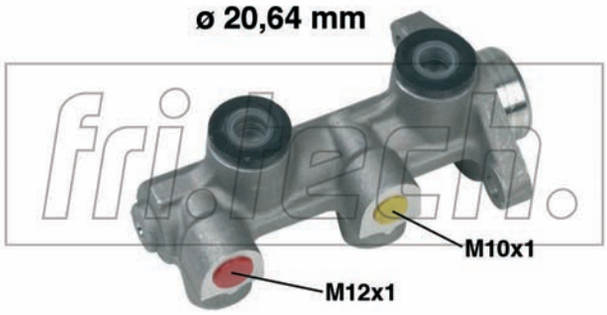

PF193

ø 20,64 mm

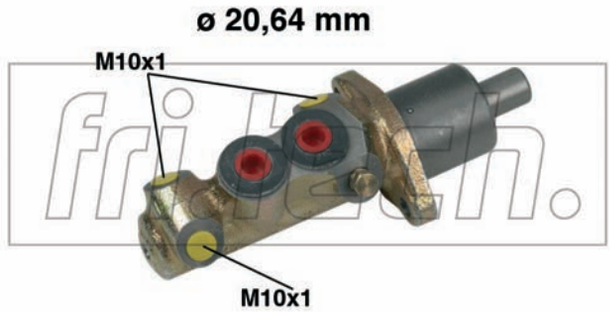

PF194

ø 20,64 mm

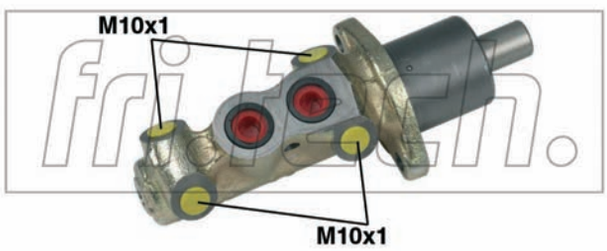

PF195

ø 22,2 mm

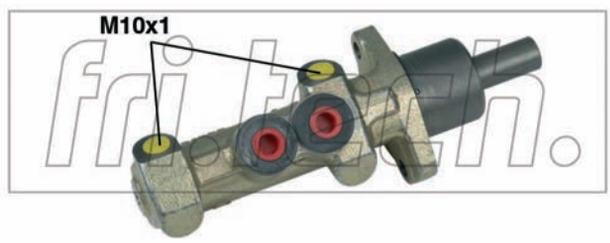

PF196

ø 22,2 mm

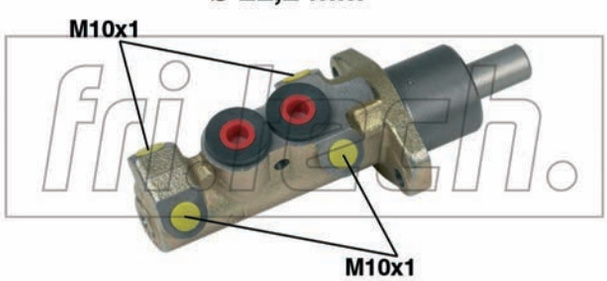

PF197

ø 22,2 mm

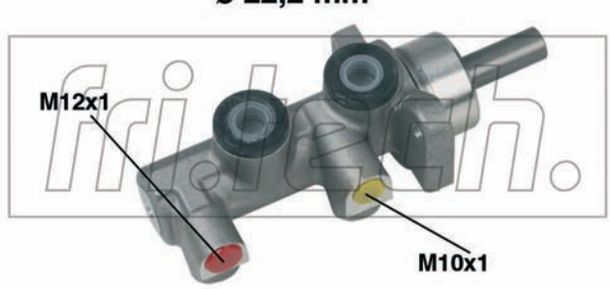

PF198

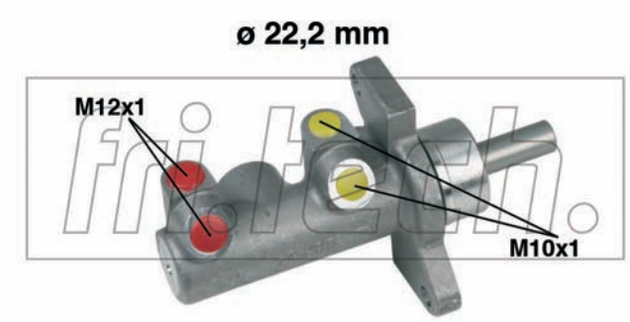

PF199

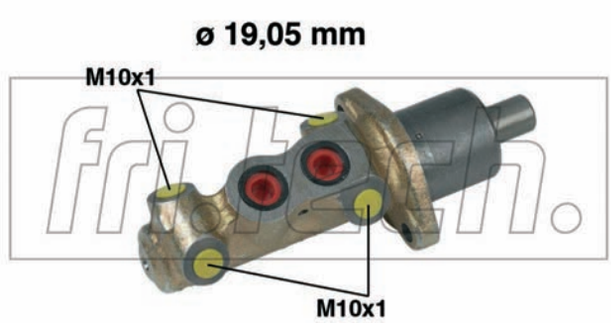

PF200

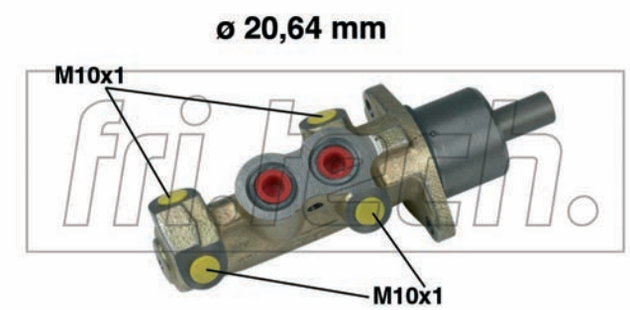

PF201

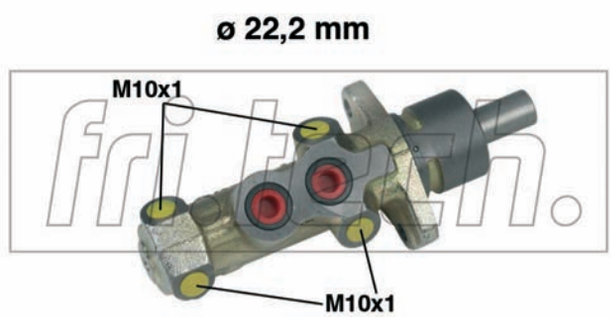

PF202

PF203

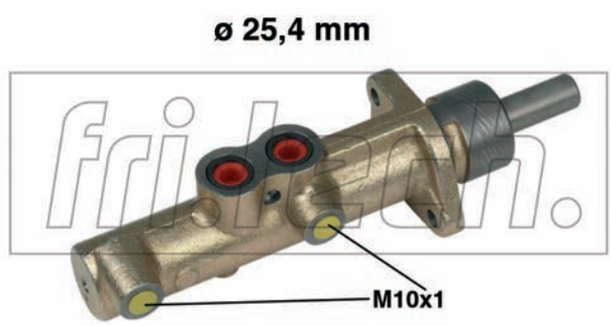

PF204

PF205

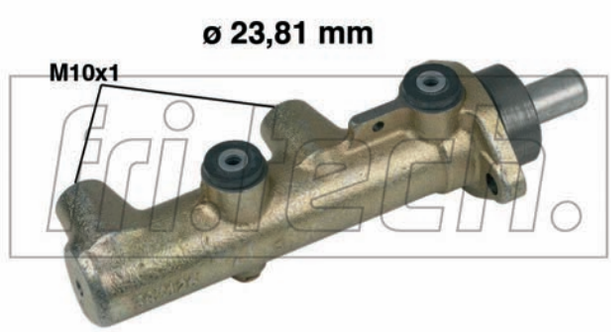

PF206

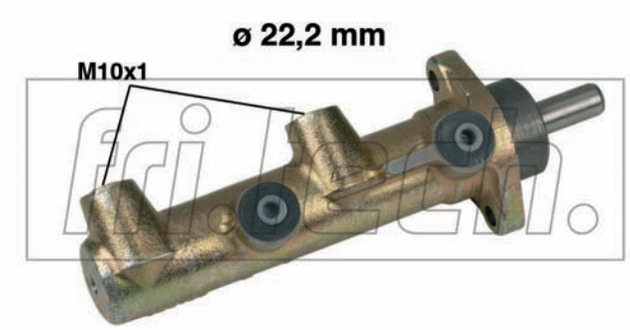

PF207

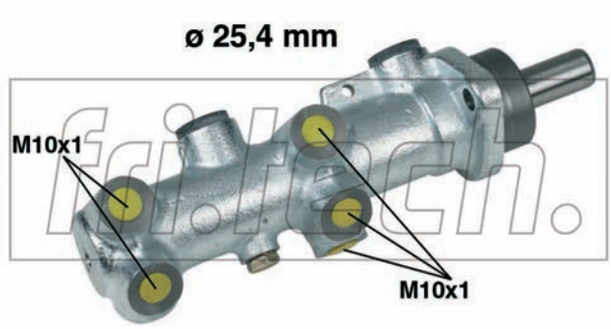

PF208

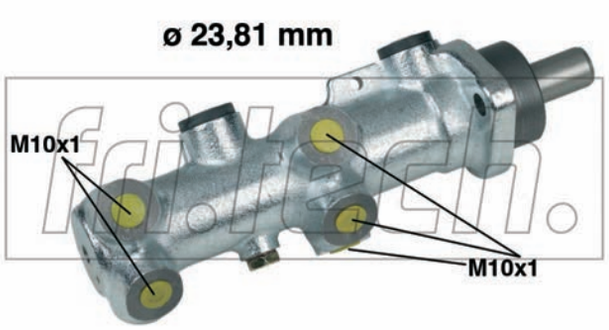

PF209

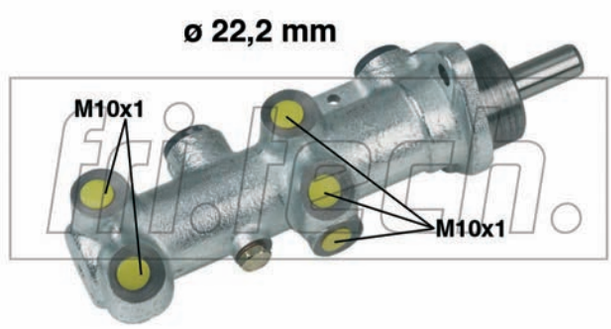

PF210

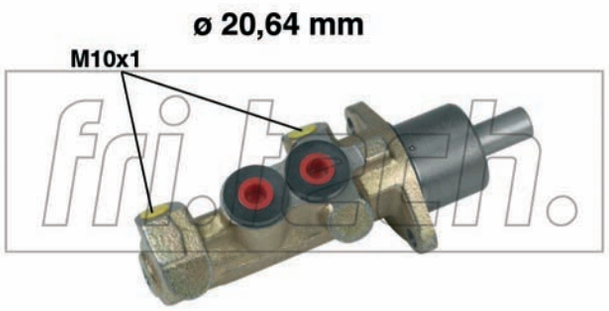

PF211

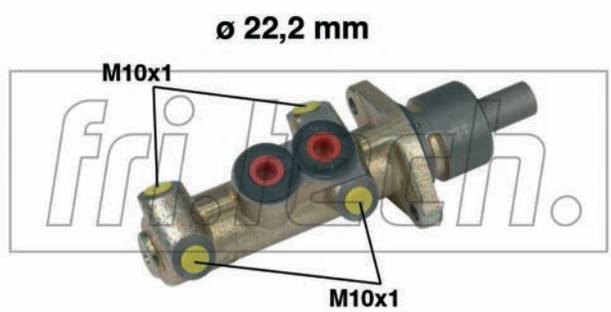

PF212

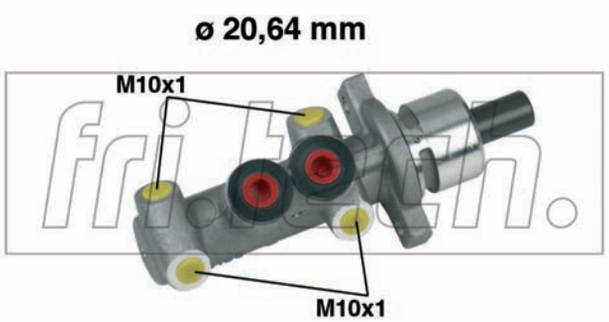

PF213

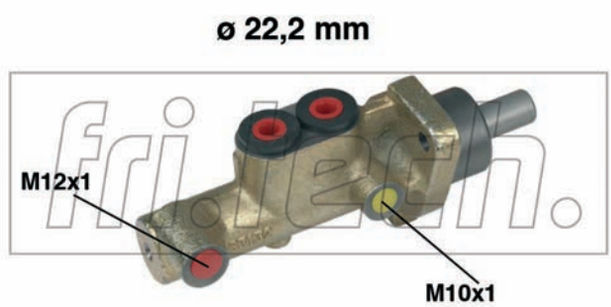

PF214

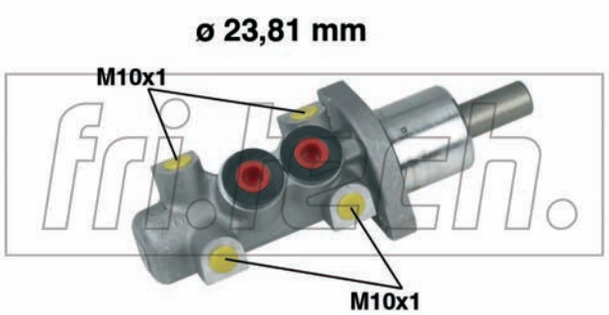

PF215

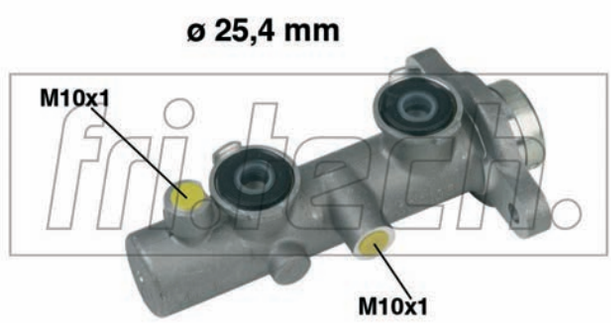

PF216

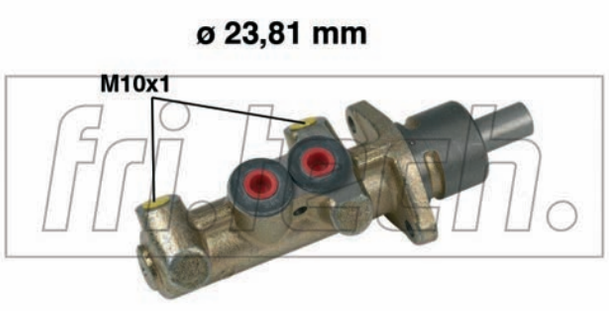

PF217

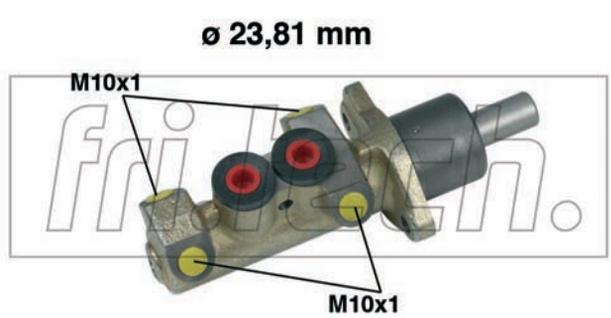

PF218

ø 22,2 mm

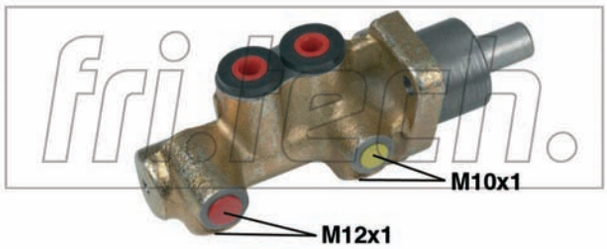

PF219

ø 23,81 mm

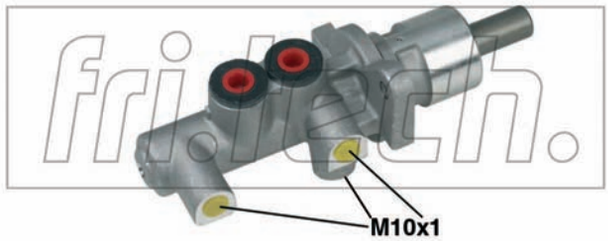

PF220

ø 22,2 mm

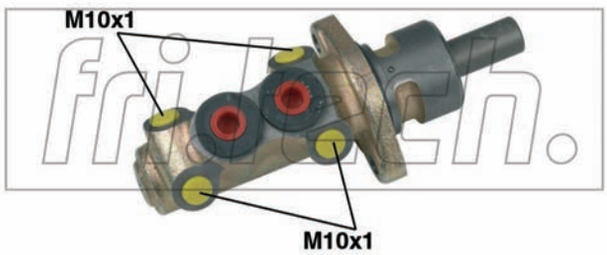

PF221

ø 23,81 mm

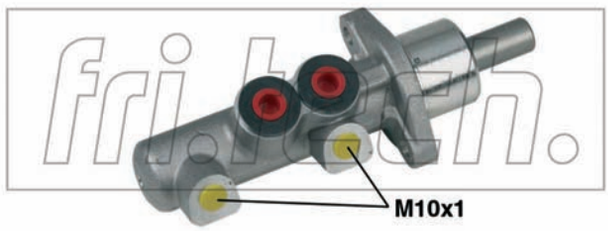

PF222

ø 23,81 mm

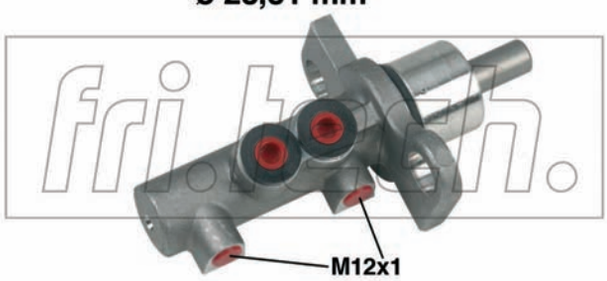

PF223

ø 22,2 mm

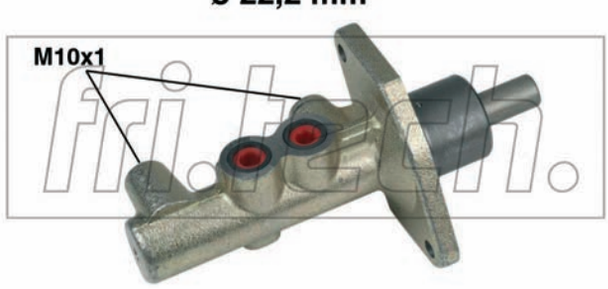

PF224

ø 20,64 mm

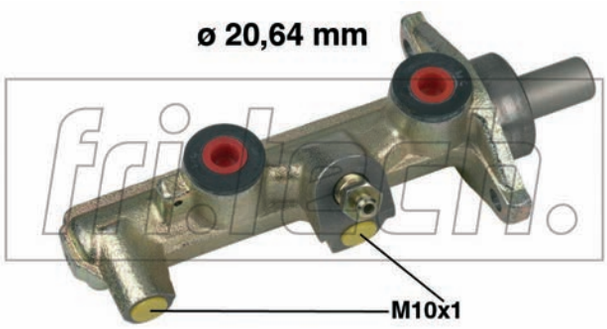

PF225

ø 22,2 mm

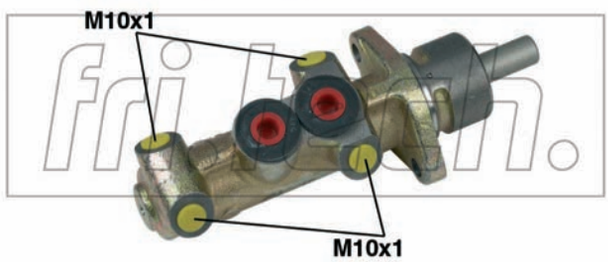

PF226

ø 19,05 mm

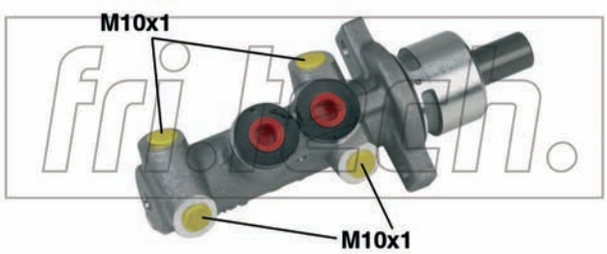

PF227

ø 25,4 mm

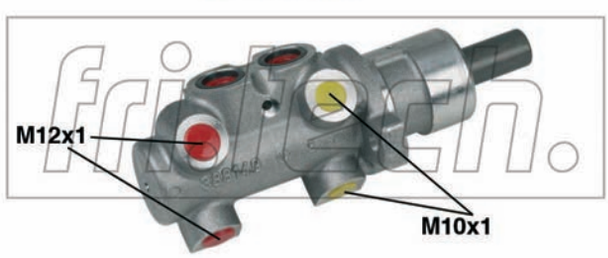

PF228

ø 20,64 mm

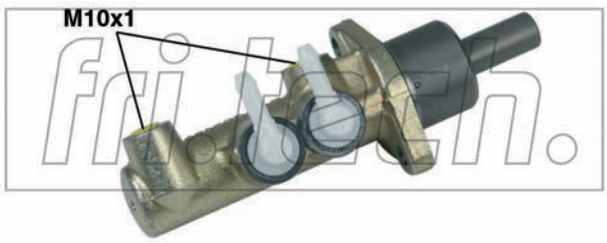

PF229

ø 25,4 mm

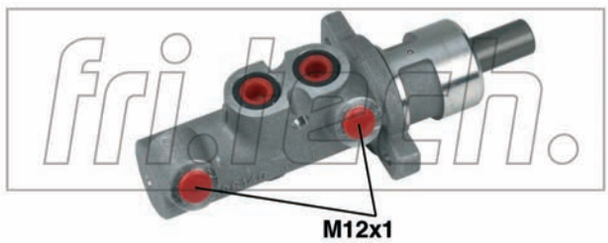

PF230

ø 20,64 mm

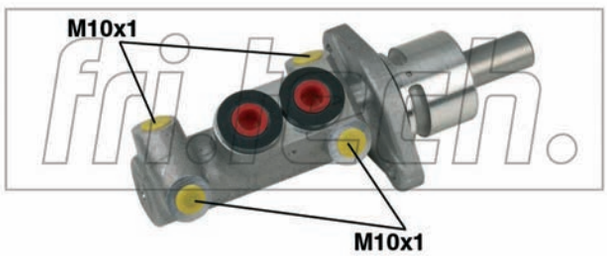

PF231

ø 22,2 mm

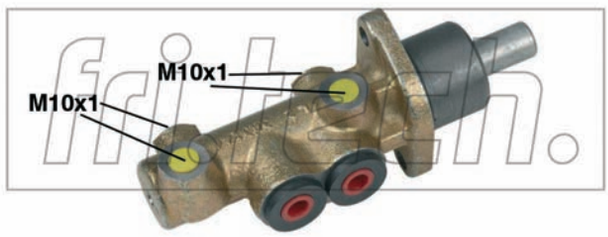

PF232

ø 22,2 mm

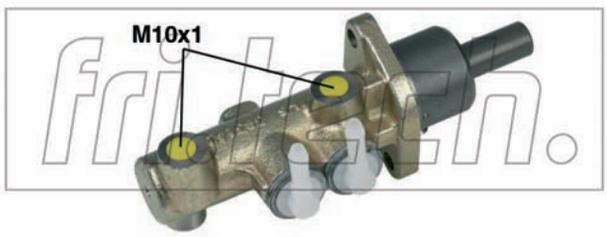

PF233

ø 23,81 mm

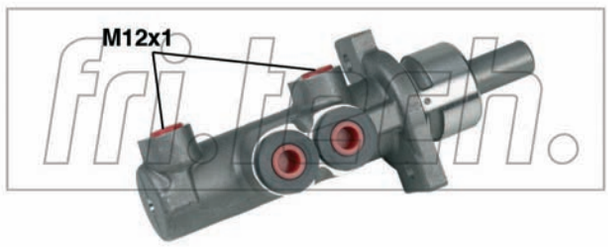

PF234

ø 20,64 mm

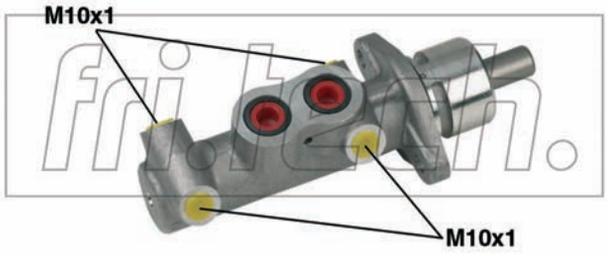

PF235

ø 22,2 mm

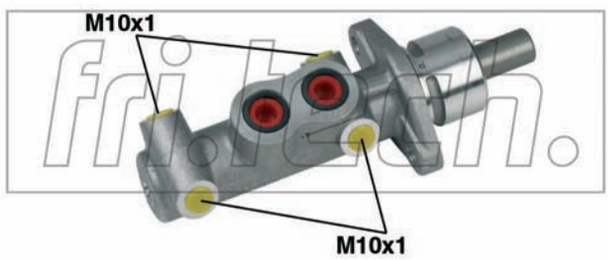

PF236

ø 22,2 mm

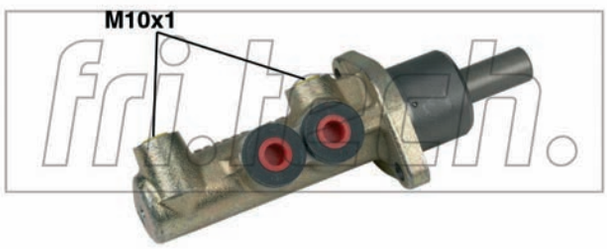

PF237

ø 28,6 mm

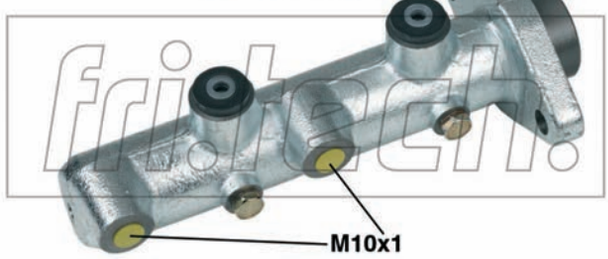

PF238

ø 22,2 mm

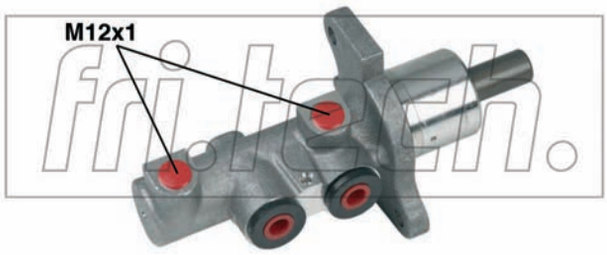

PF239

ø 22,2 mm

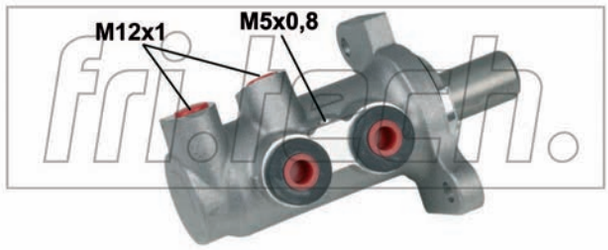

PF240

ø 23,81 mm

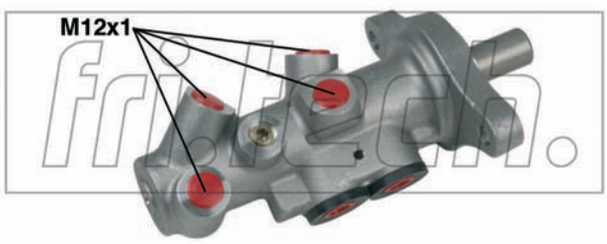

PF241

ø 20,64 mm

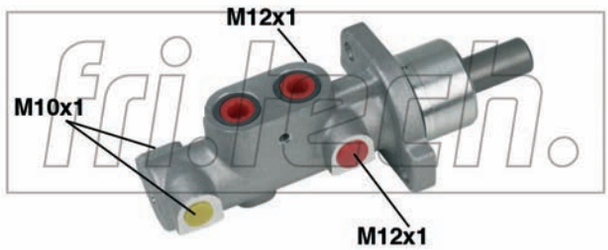

PF242

ø 22,2 mm

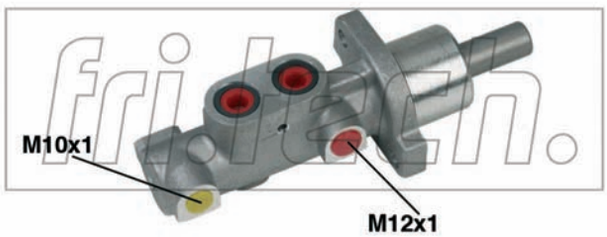

PF243

ø 23,81 mm

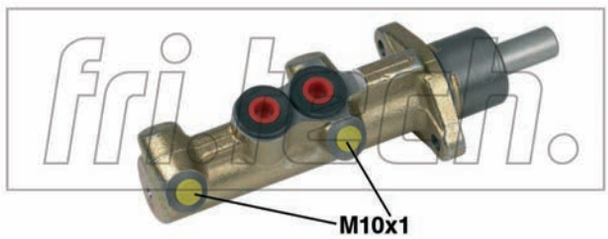

PF244

ø 23,81 mm

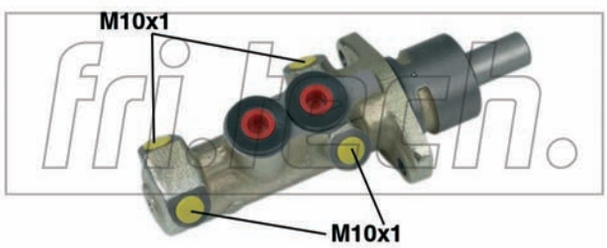

PF245

ø 20,64 mm

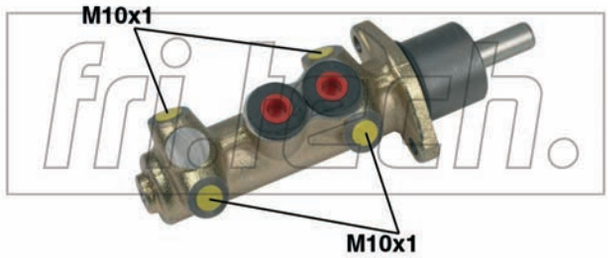

PF246

ø 23,81 mm

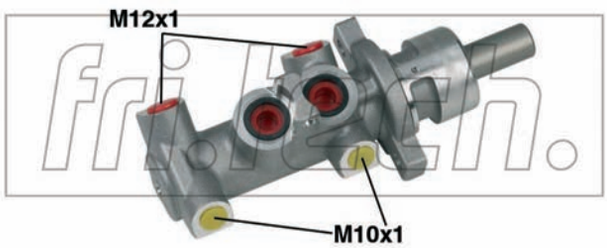

PF247

ø 22,2 mm

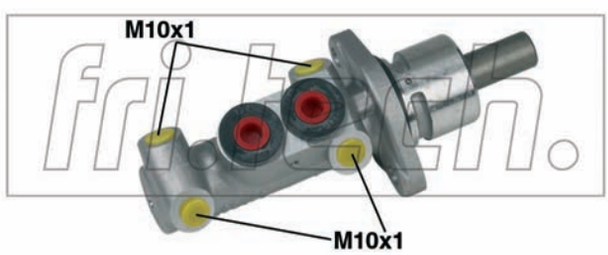

PF248

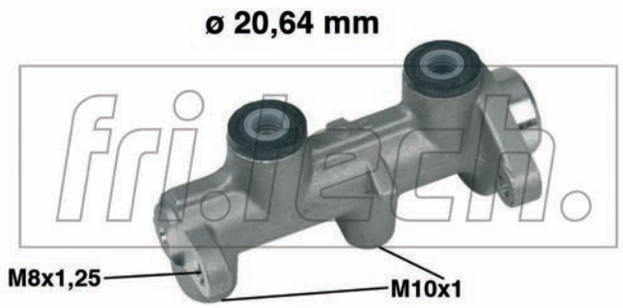

PF249

PF250

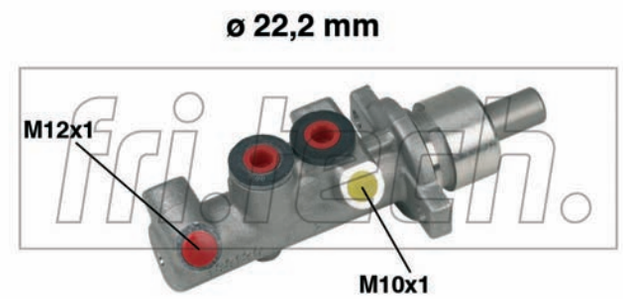

PF251

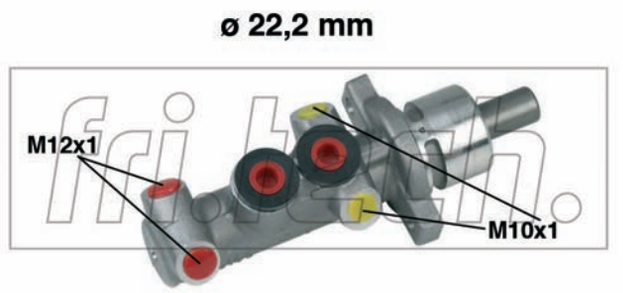

PF252

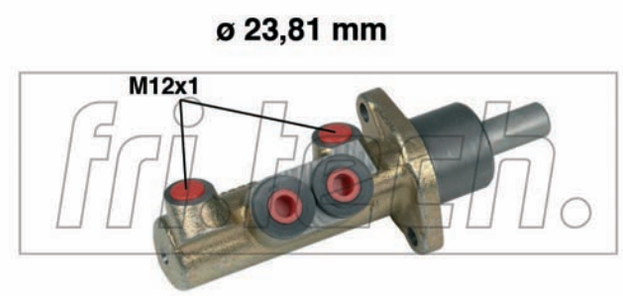

PF253

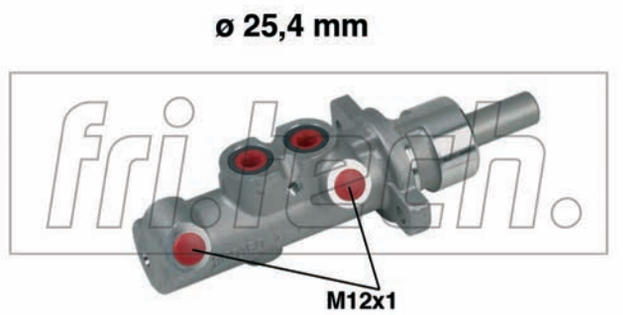

PF254

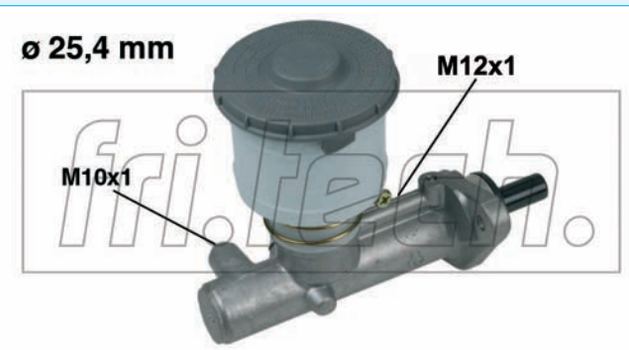

PF255

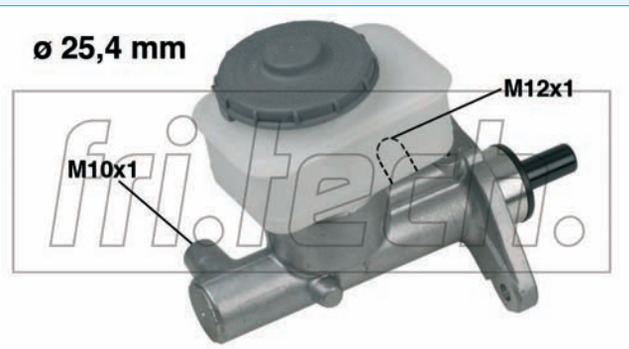

PF256

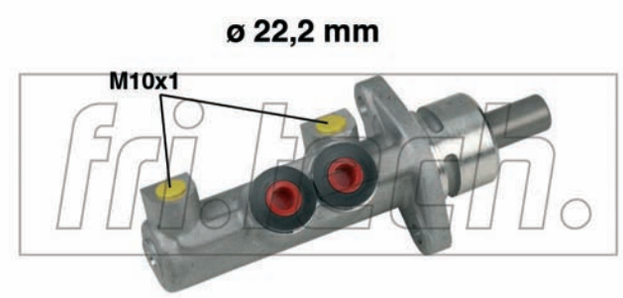

PF257

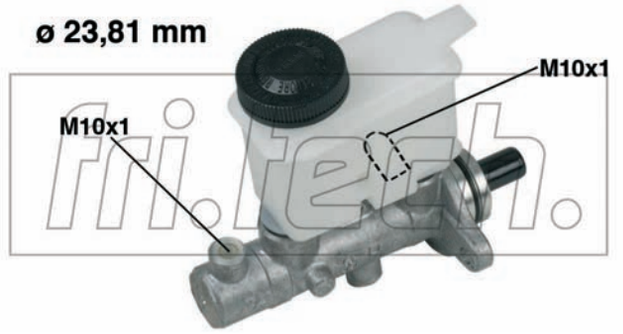

PF258

ø 23,81 mm

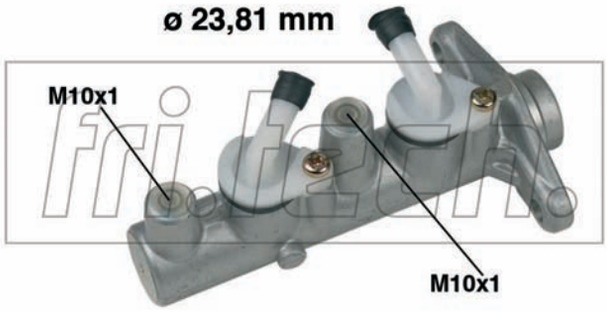

PF259

ø 22,2 mm

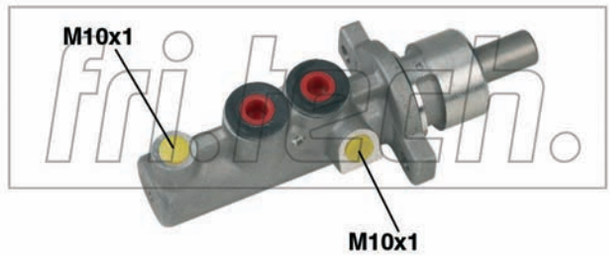

PF260

ø 22,2 mm

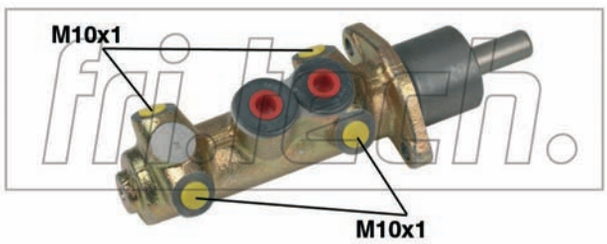

PF261

ø 23,81 mm

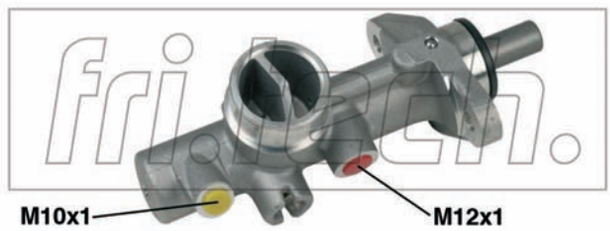

PF262

ø 22,2 mm

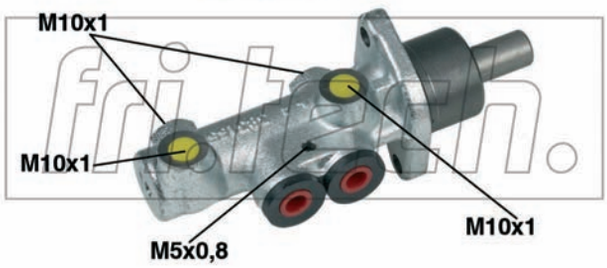

PF263

ø 22,2 mm

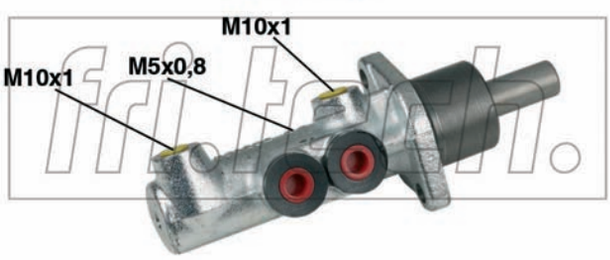

PF264

ø 23,81 mm

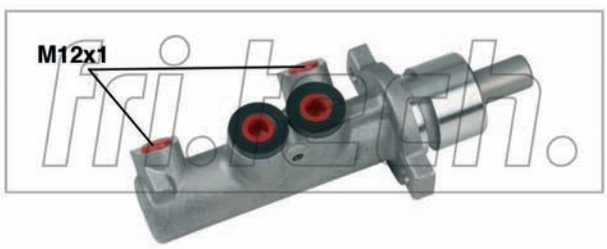

PF265

ø 20,64 mm

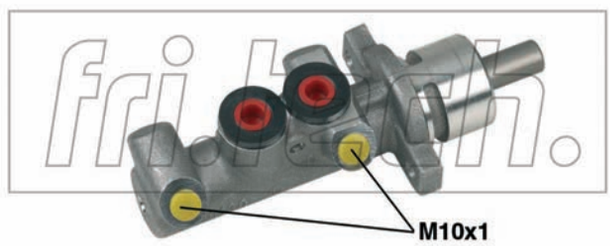

PF266

ø 20,64 mm

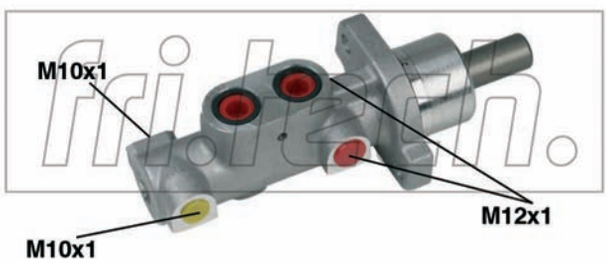

PF267

ø 23,81 mm

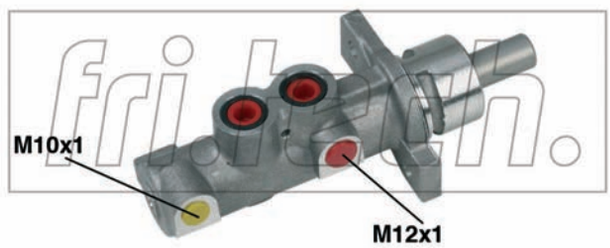

PF268

ø 22,2 mm

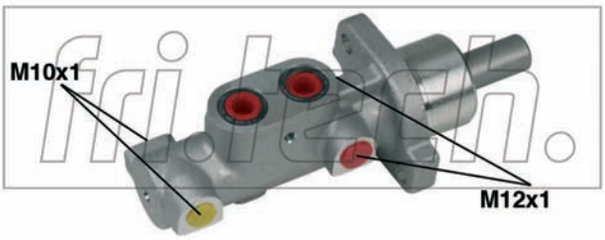

PF269

ø 20,64 mm

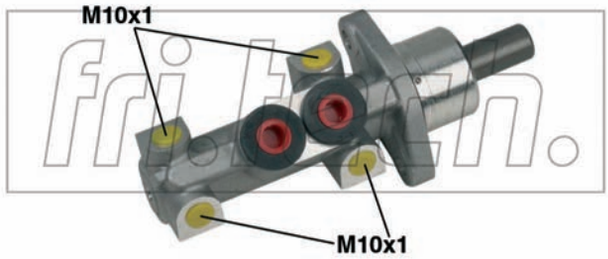

PF270

ø 23,81 mm

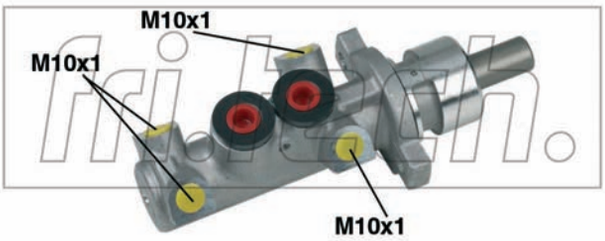

PF271

ø 23,81 mm

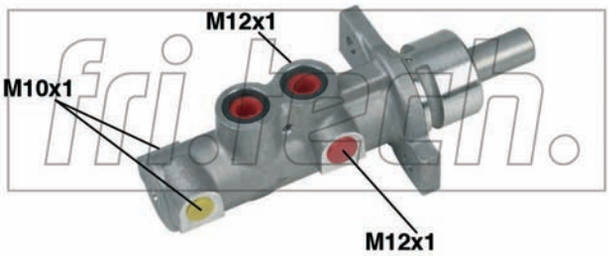

PF272

ø 20,64 mm

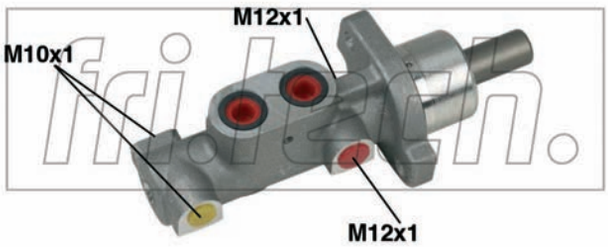

PF273

ø 22,2 mm

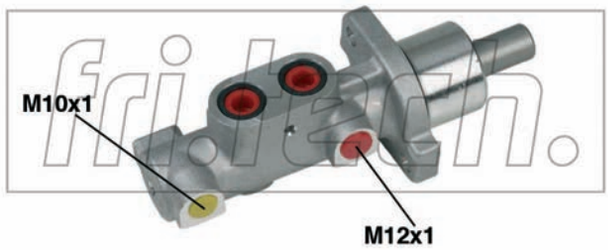

PF274

ø 23,81 mm

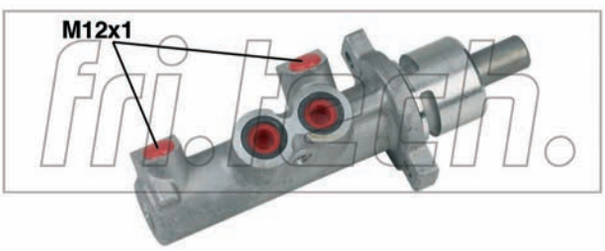

PF275

ø 23,81 mm

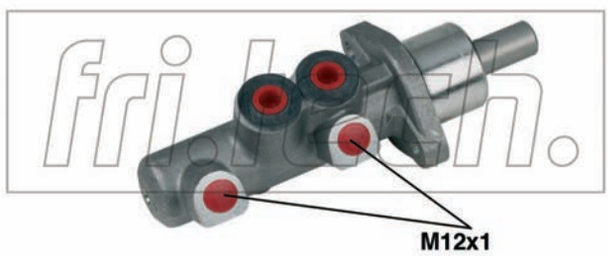

PF276

ø 25,4 mm

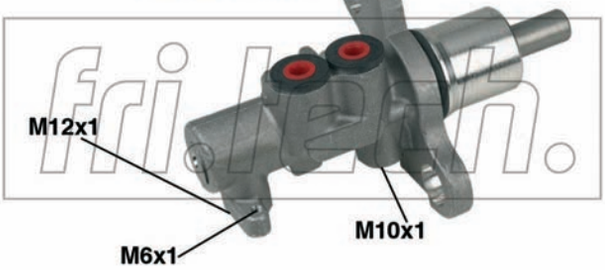

PF277

ø 25,4 mm

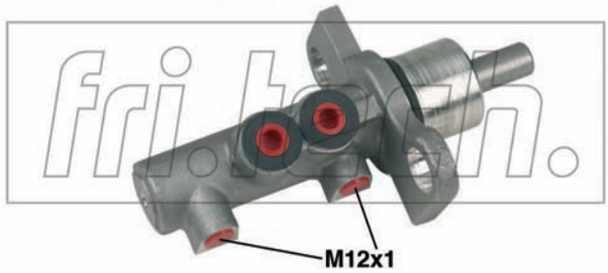

PF278

ø 23,81 mm

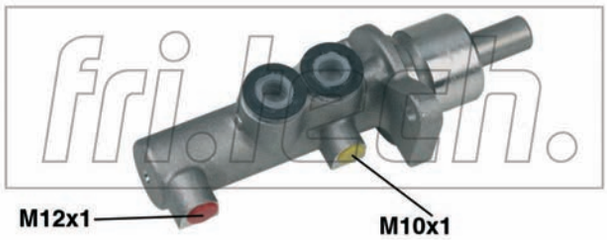

PF279

ø 23,81 mm

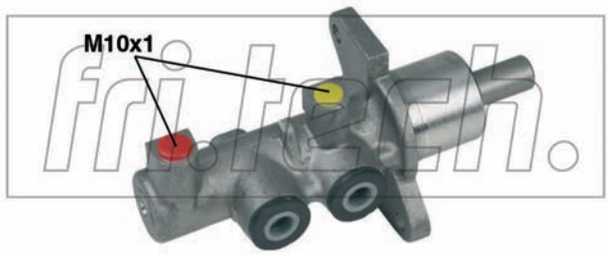

PF280

ø 22,2 mm

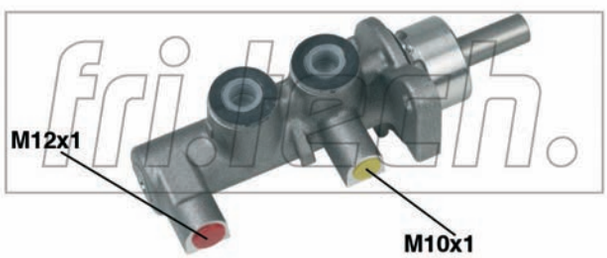

PF281

ø 22,2 mm

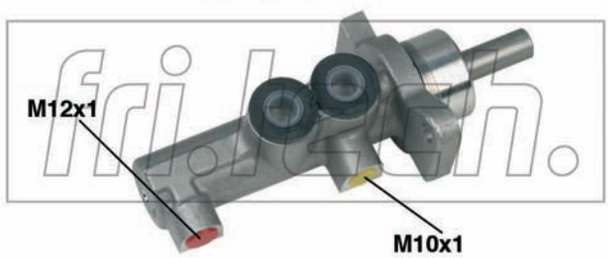

PF282

ø 23,81 mm

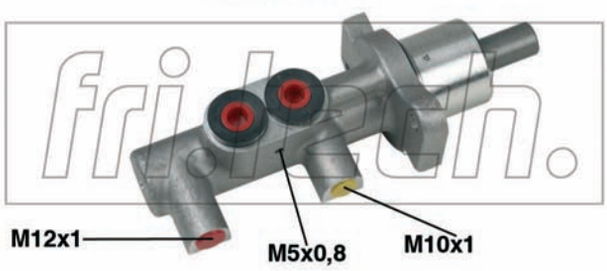

PF283

ø 22,2 mm

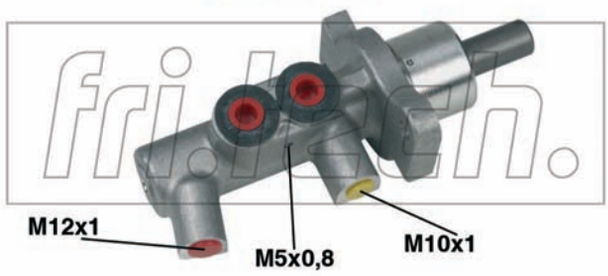

PF284

ø 23,81 mm

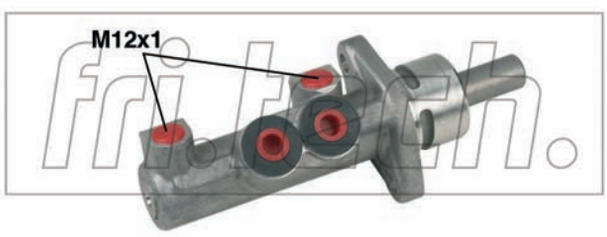

PF285

ø 23,81 mm

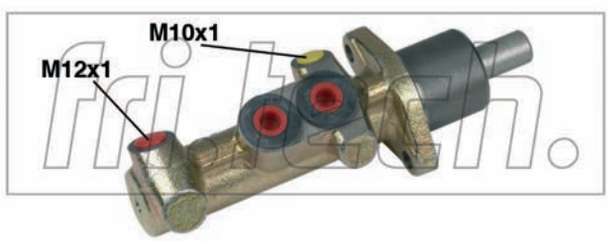

PF286

ø 22,2 mm

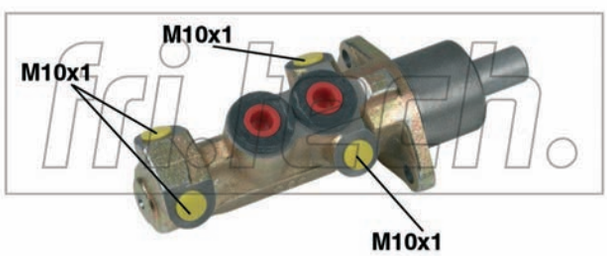

PF287

ø 20,64 mm

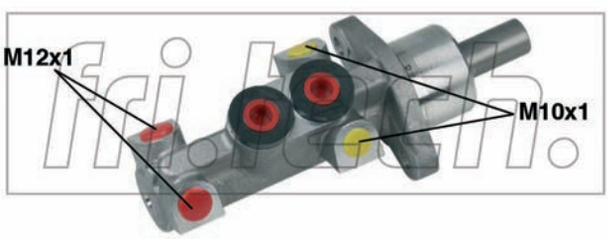

PF288

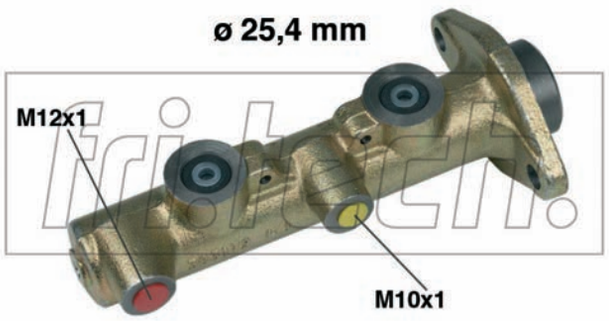

PF289

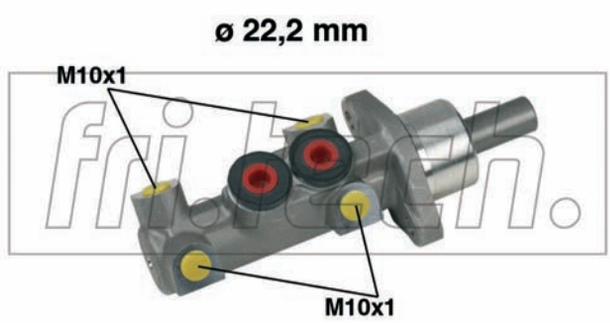

PF290

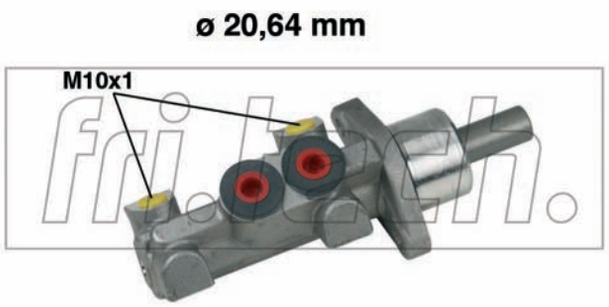

PF291

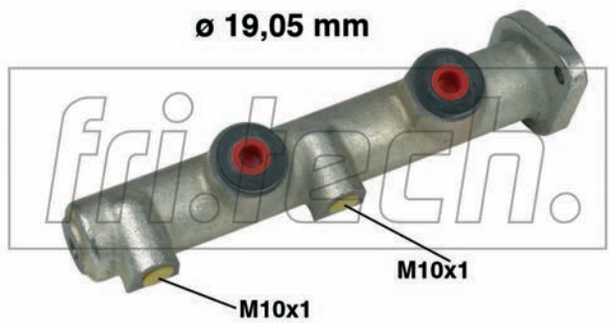

PF292

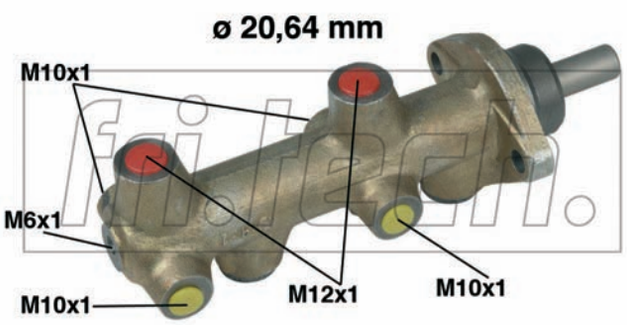

PF293

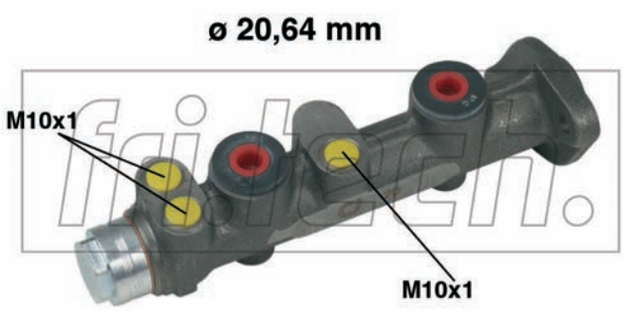

PF294

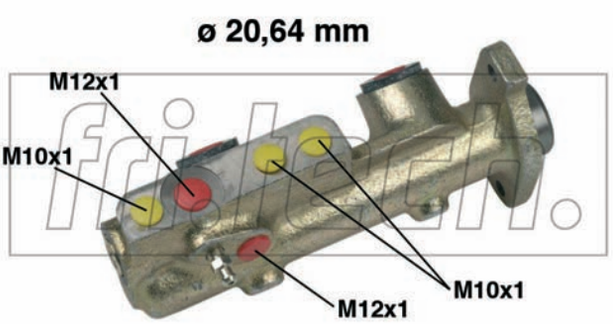

PF295

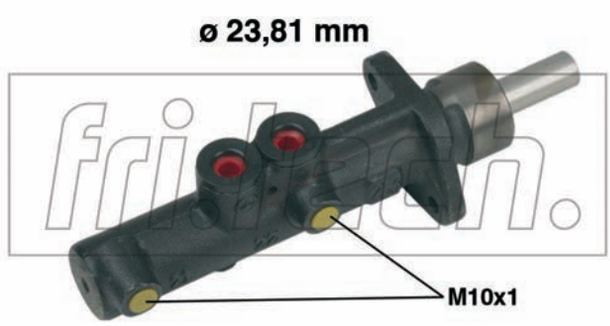

PF304

PF305

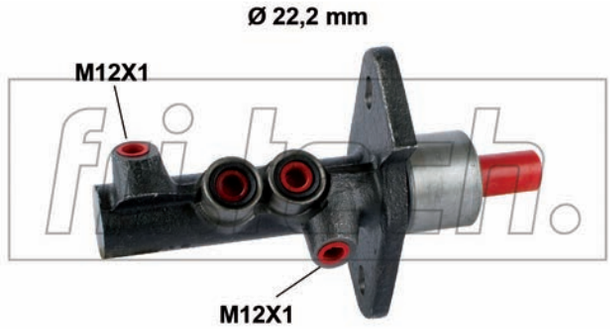

PF307

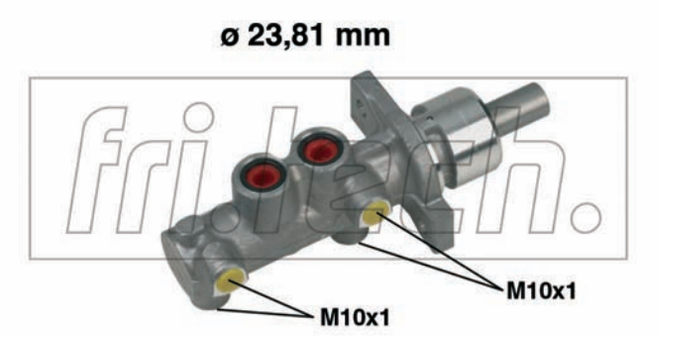

PF308

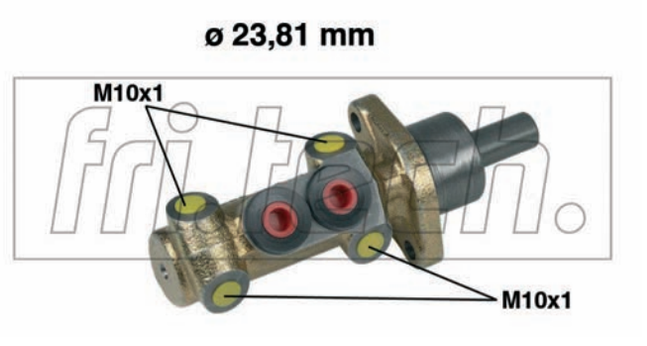

PF309

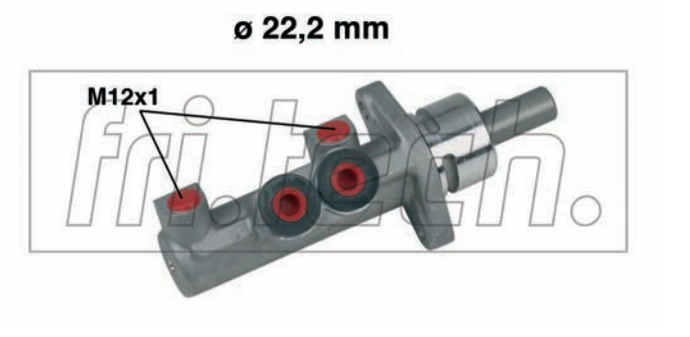

PF310

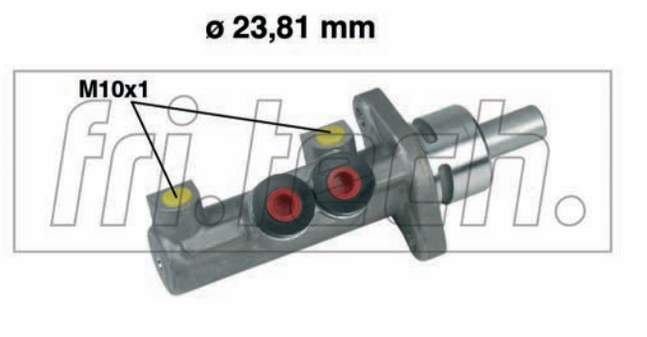

PF311

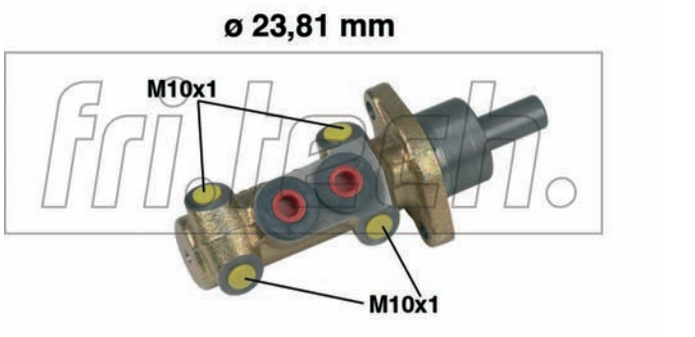

PF312

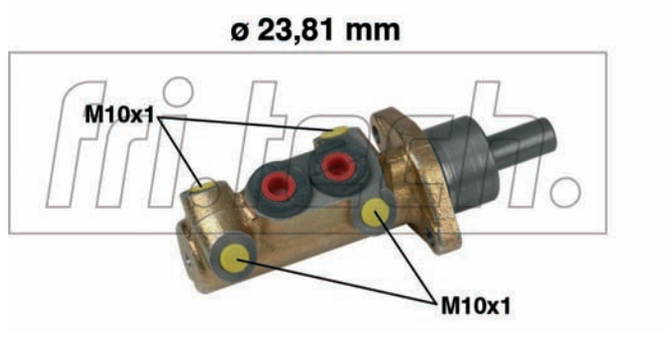

PF313

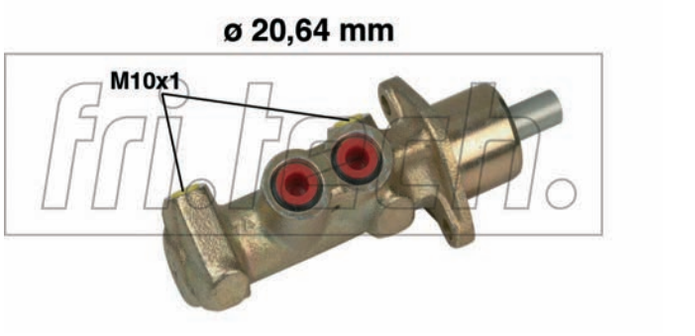

PF320

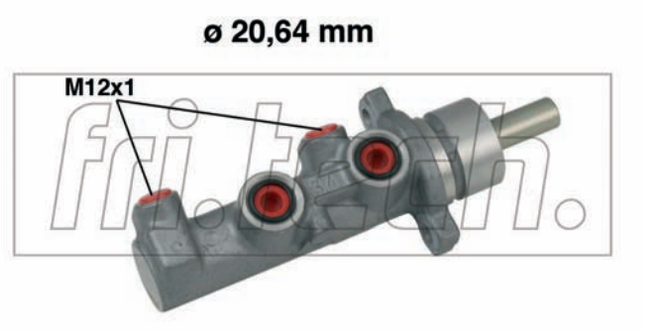

PF322

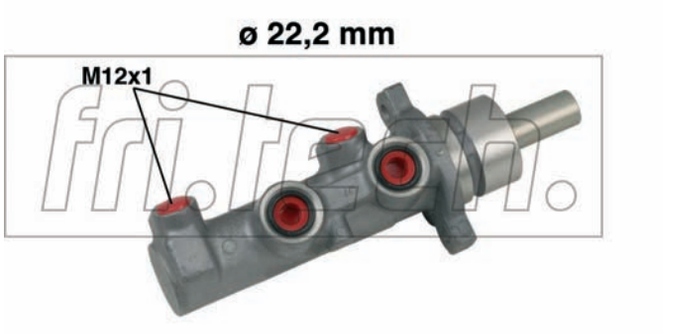

PF323

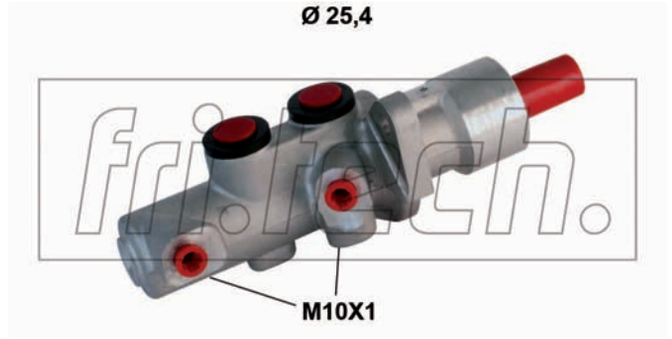

PF326

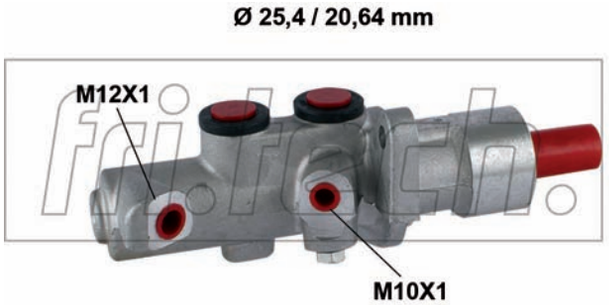

PF327

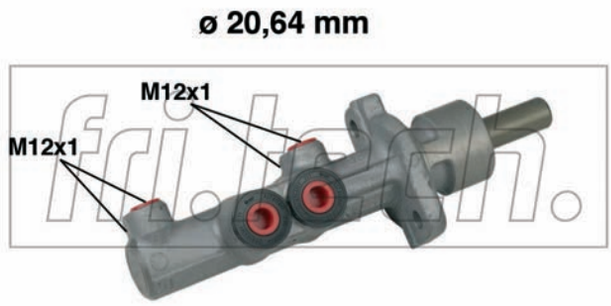

PF329

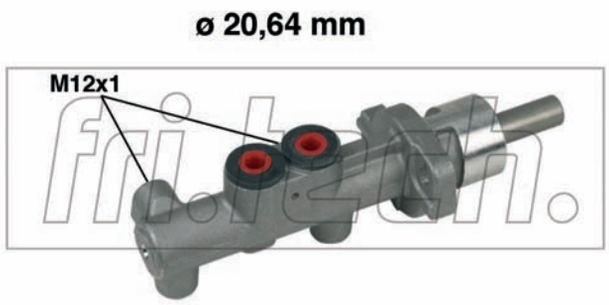

PF330

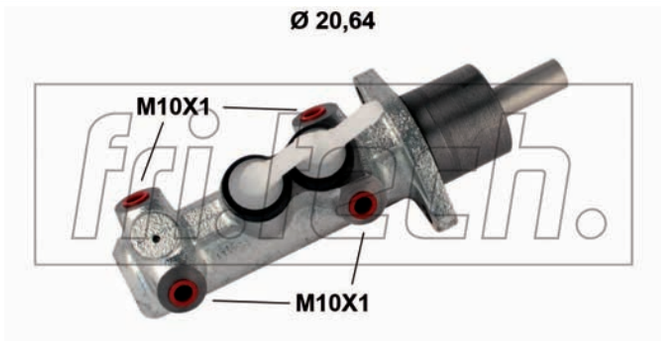

PF339

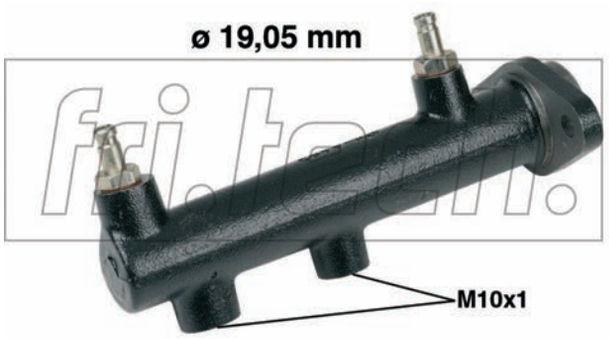

PF359

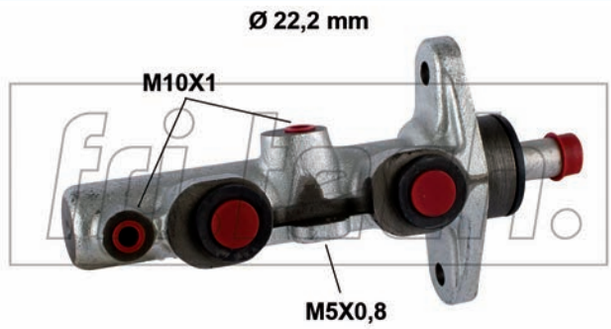

PF374

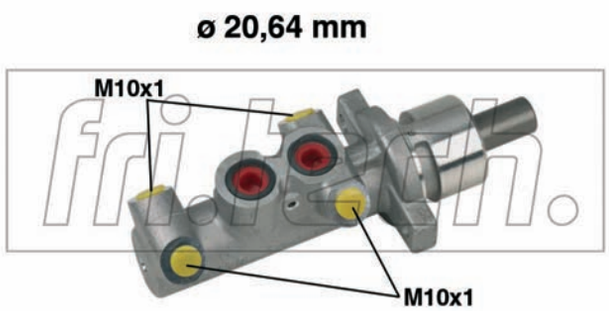

PF380

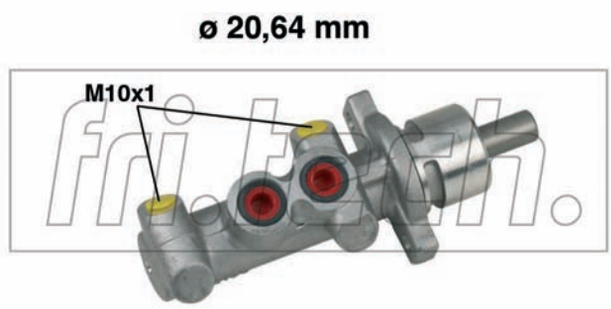

PF381

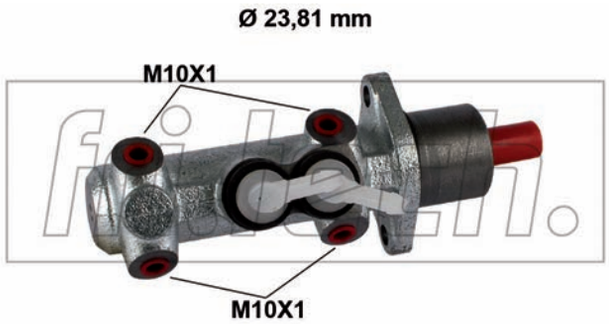

PF382

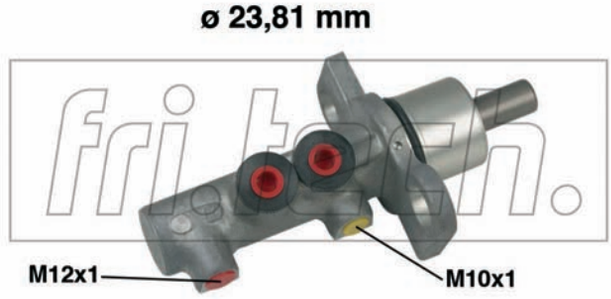

PF383

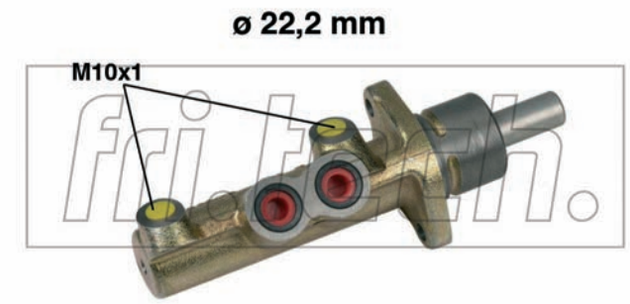

PF385

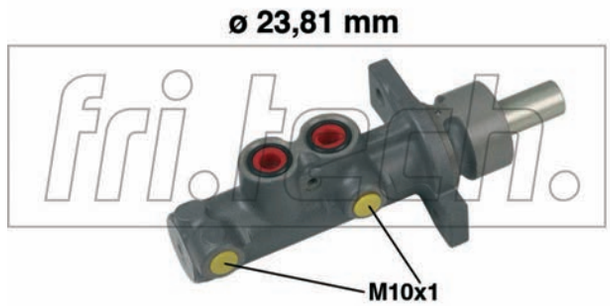

PF390

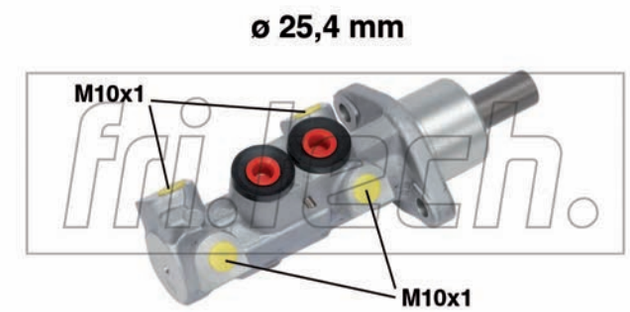

PF393

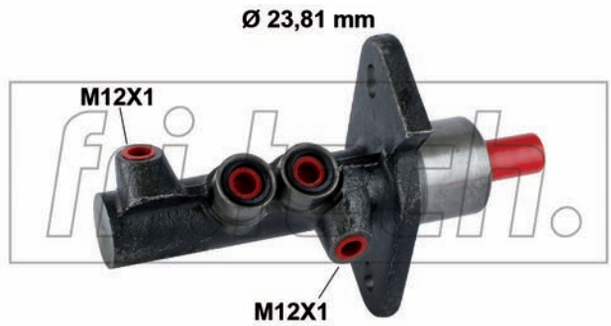

PF394

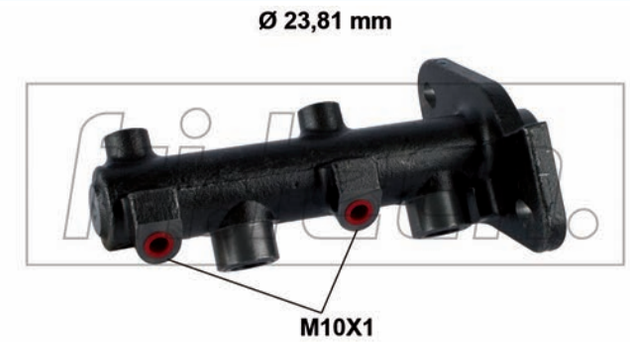

PF397

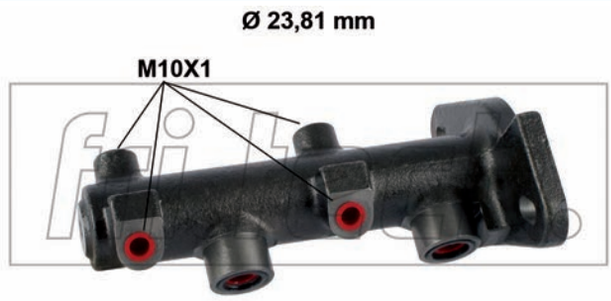

PF398

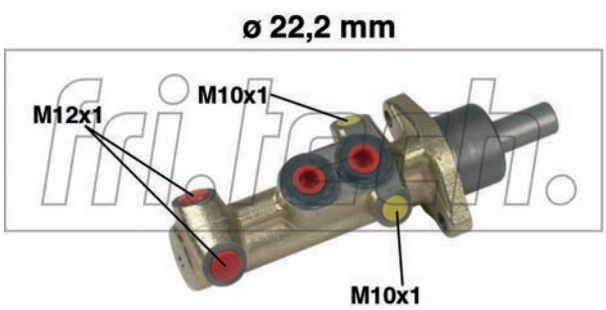

PF401

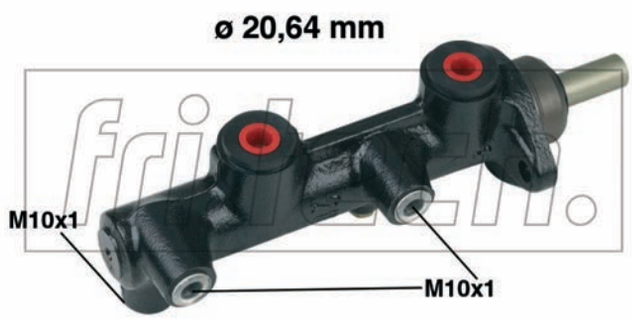

PF405

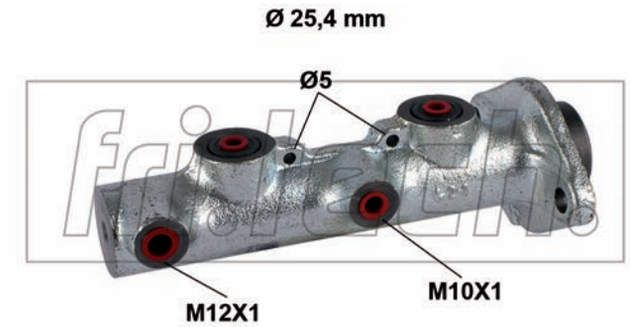

PF426

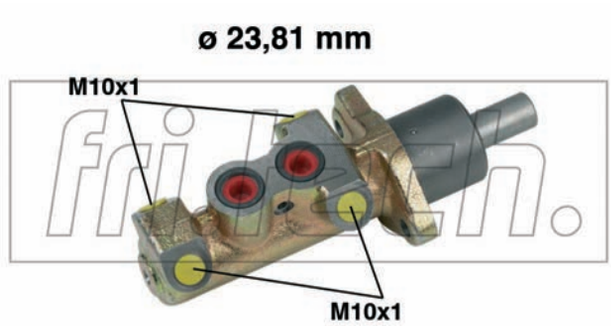

PF429

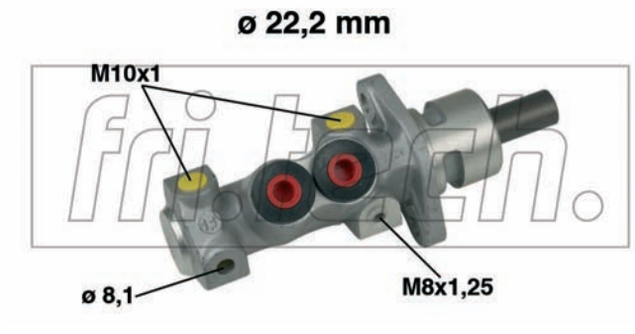

PF434

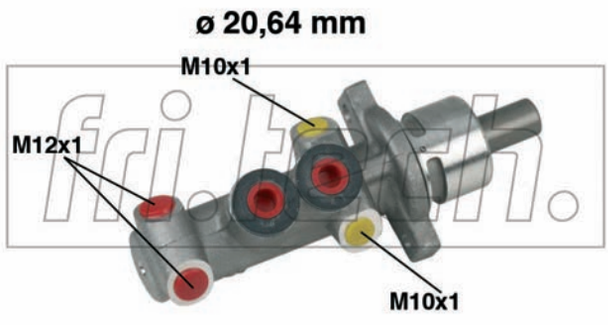

PF436

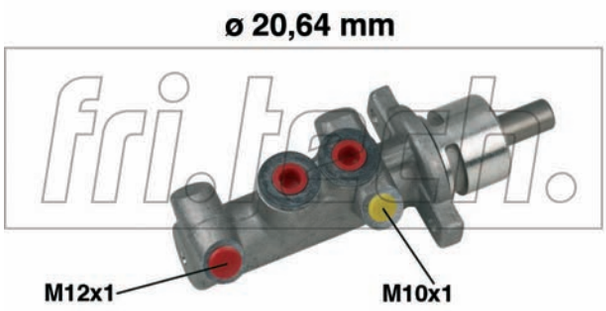

PF437

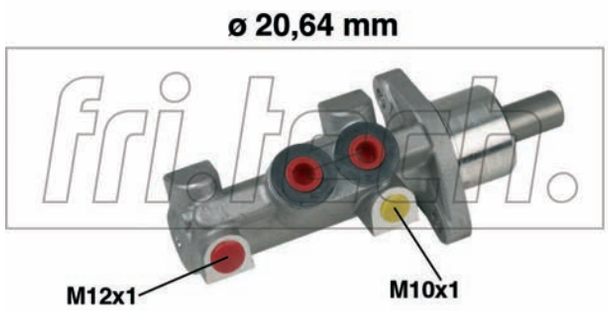

PF438

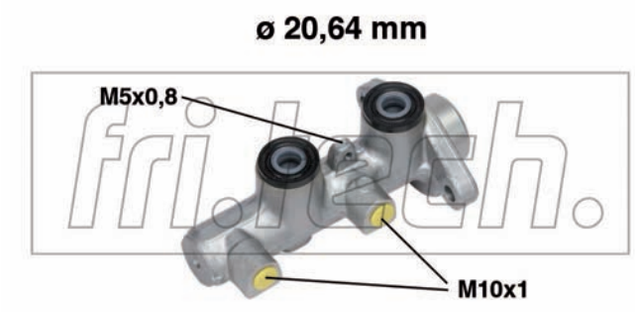

PF442

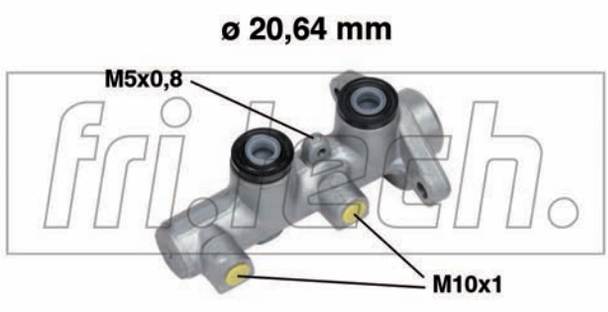

PF443

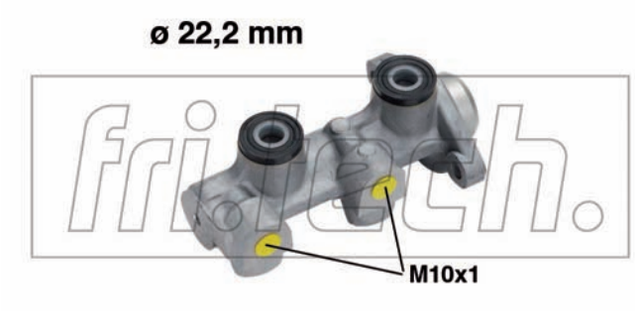

PF444

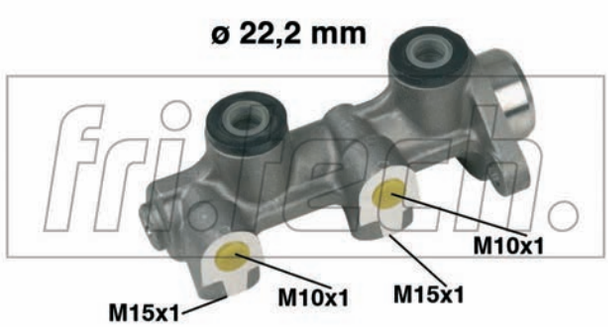

PF448

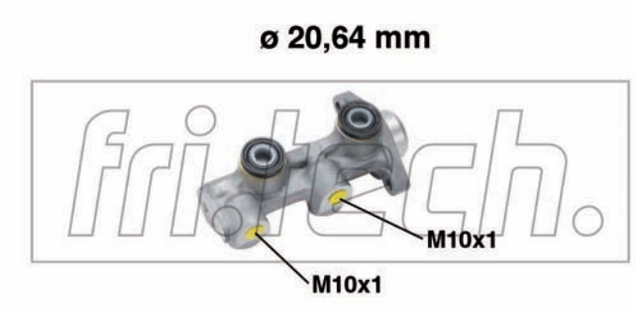

PF449

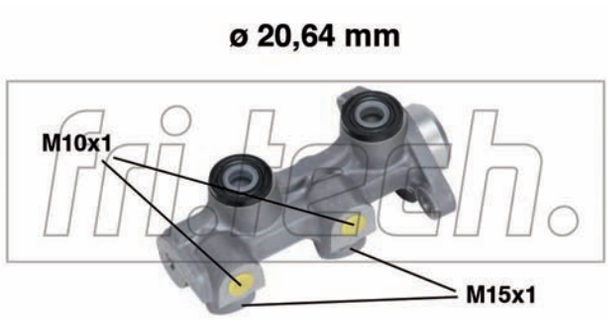

PF452

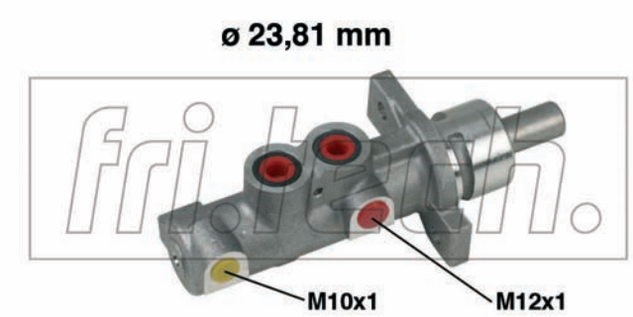

PF458

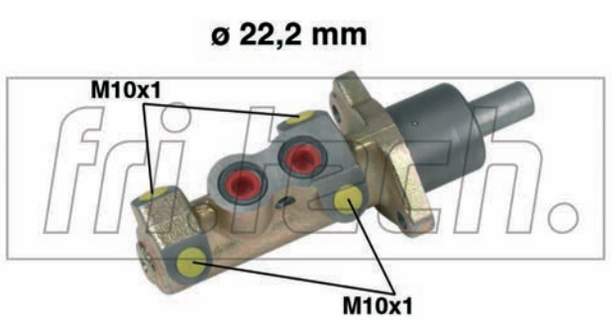

PF462

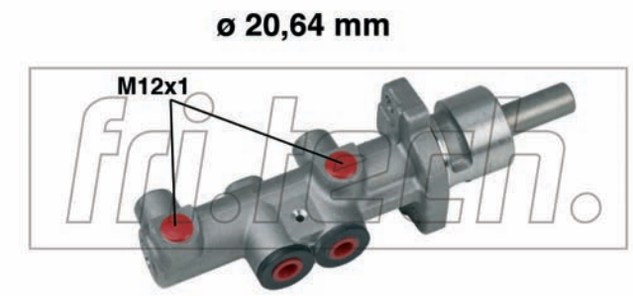

PF463

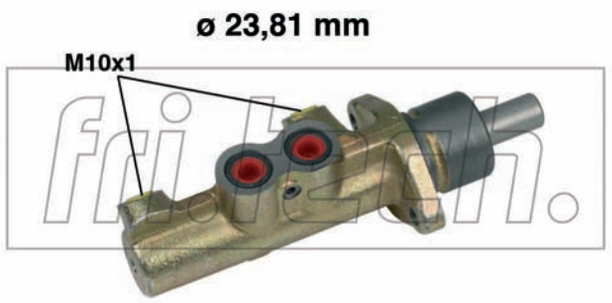

PF464

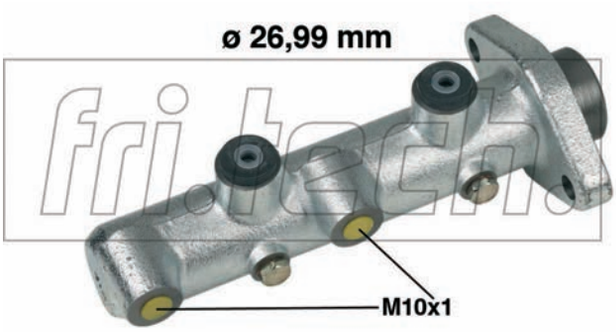

PF465

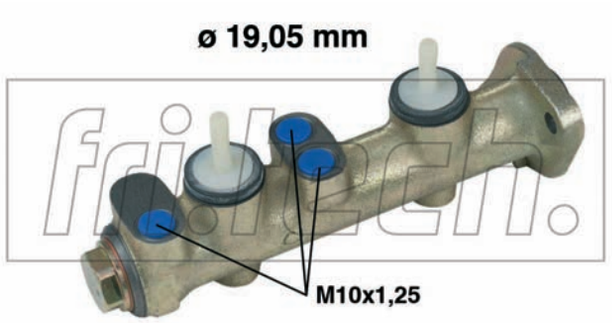

PF473

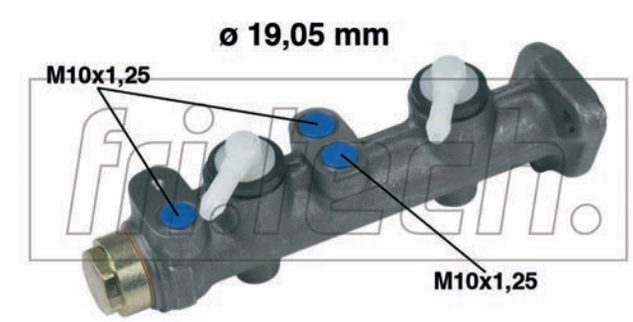

PF474

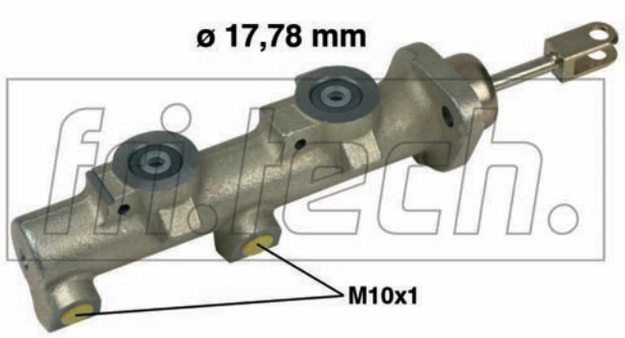

PF475

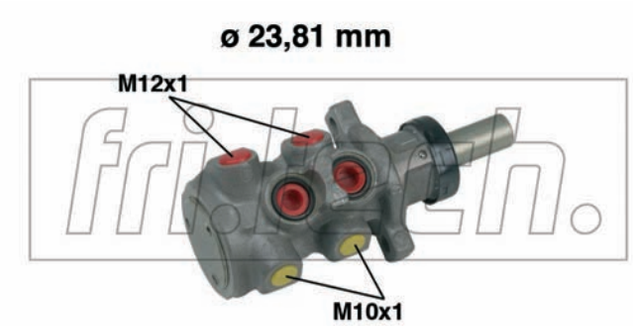

PF479

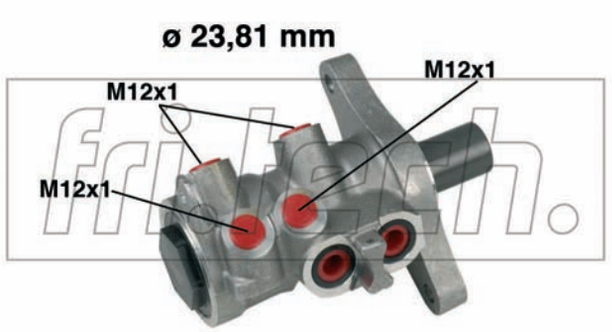

PF480

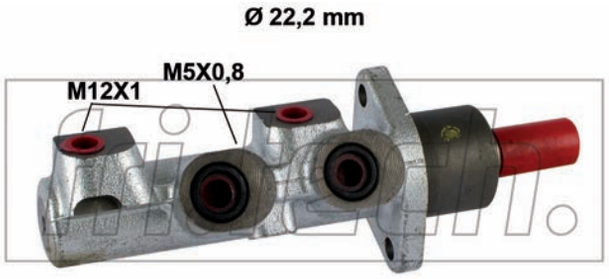

PF481

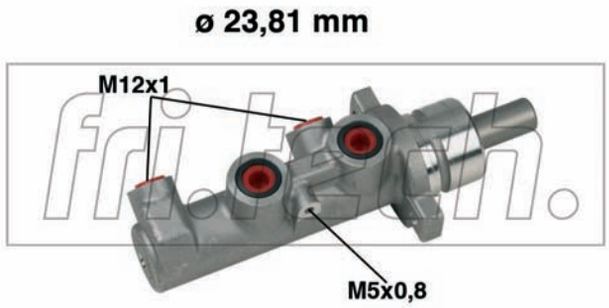

PF482

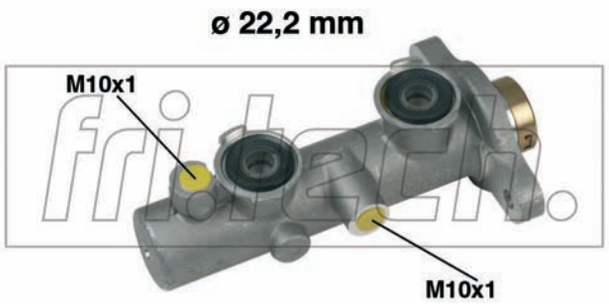

PF487

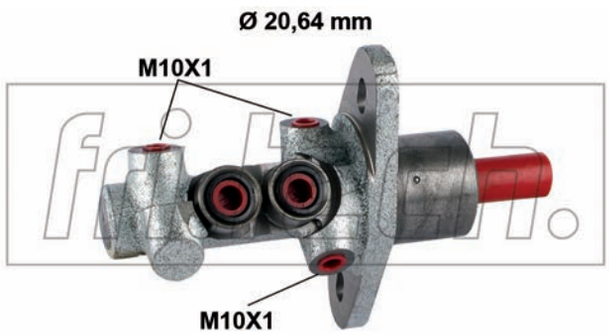

PF490

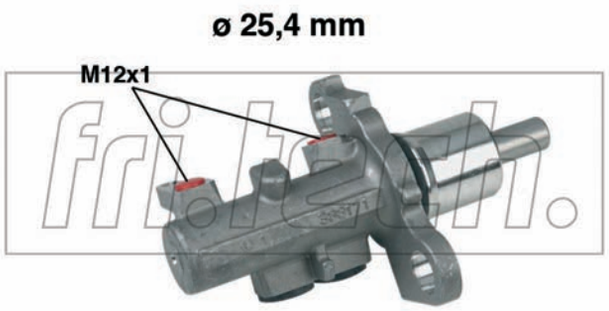

PF492

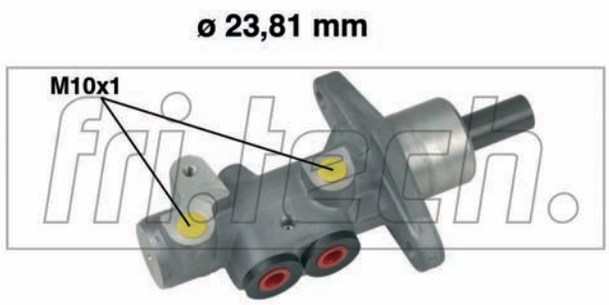

PF493

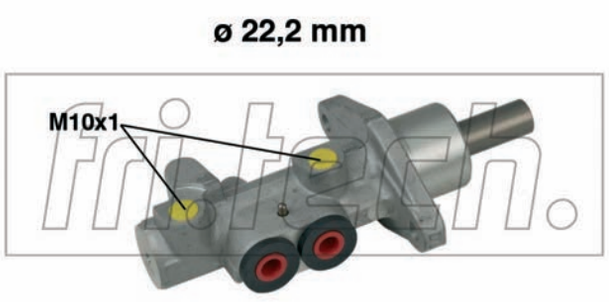

PF494

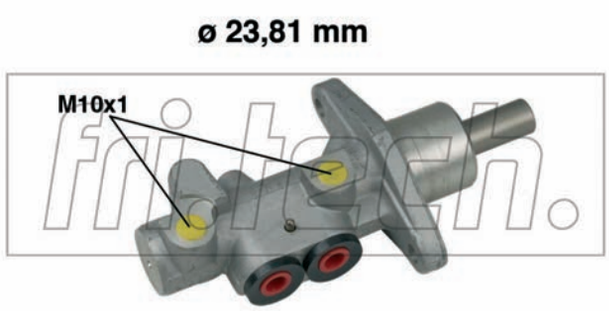

PF495

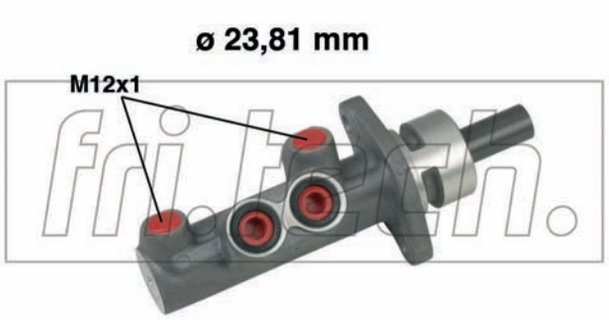

PF499

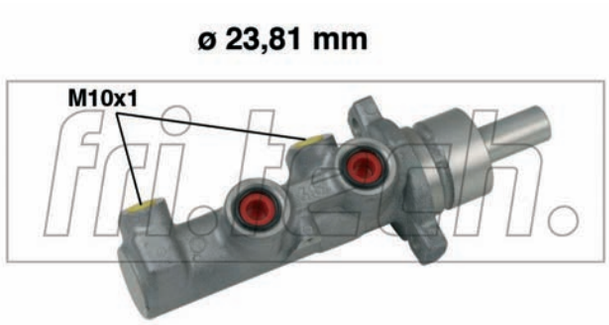

PF500

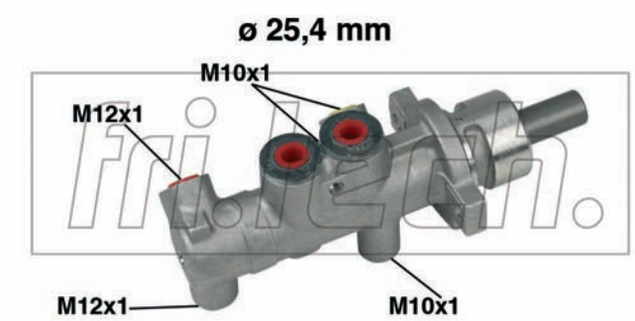

PF502

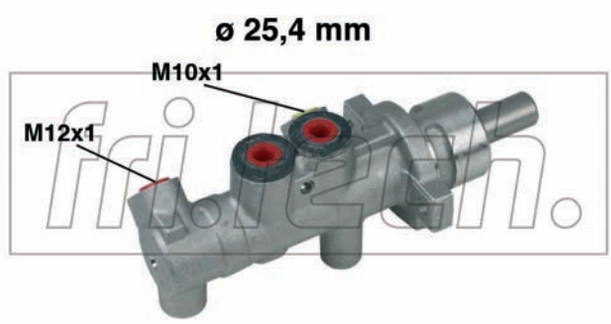

PF503

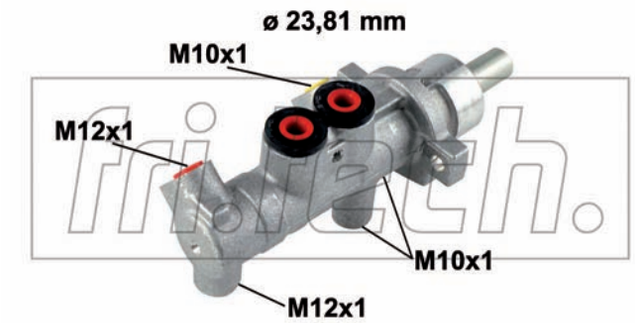

PF504

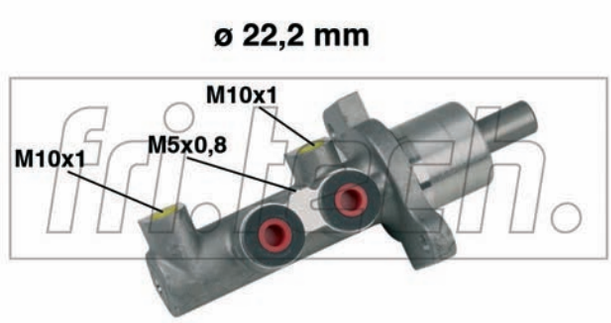

PF505

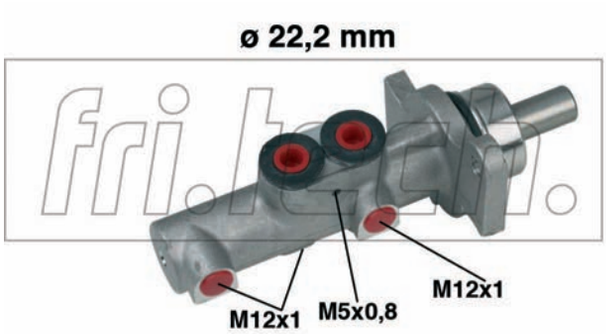

PF506

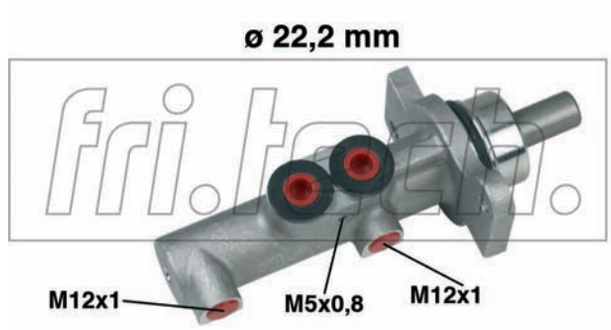

PF507

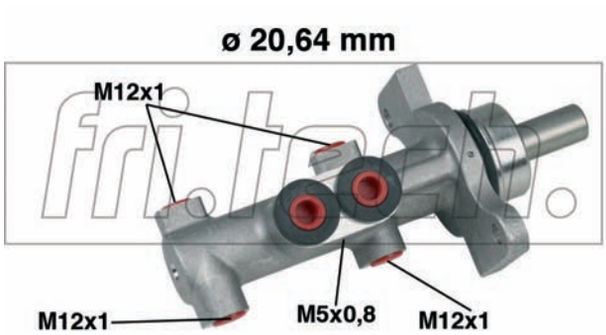

PF508

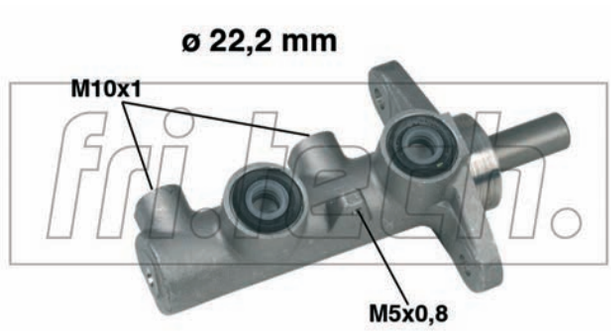

PF509

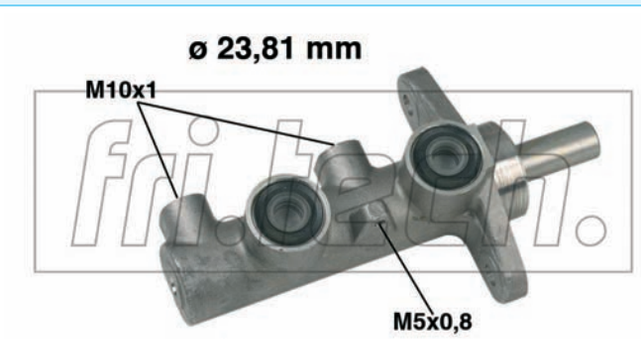

PF510

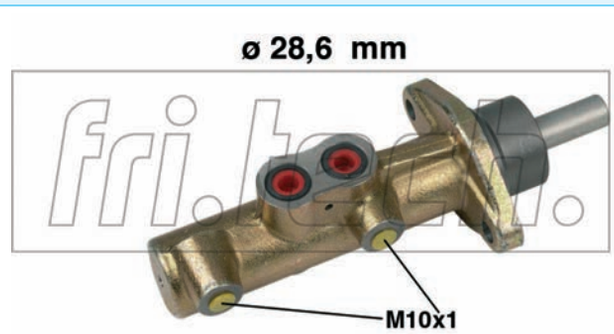

PF511

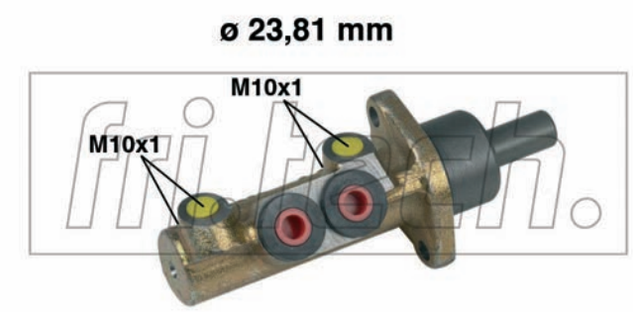

PF512

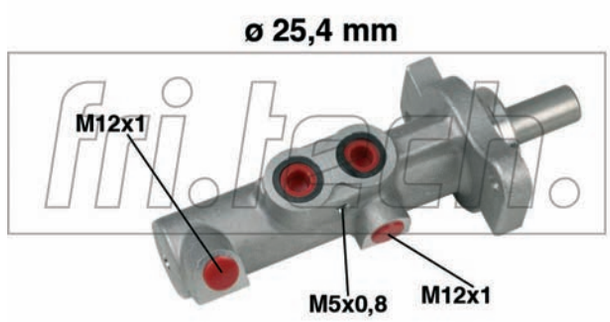

PF513

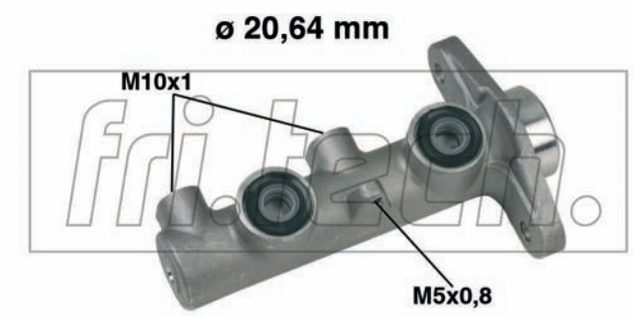

PF514

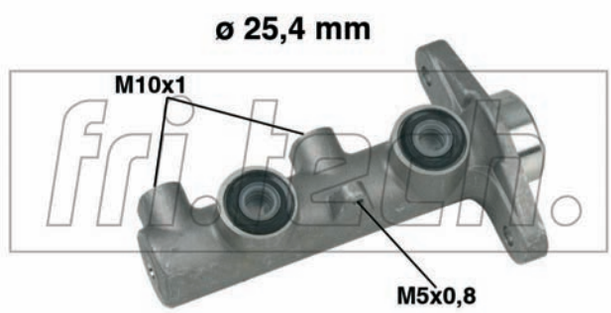

PF515

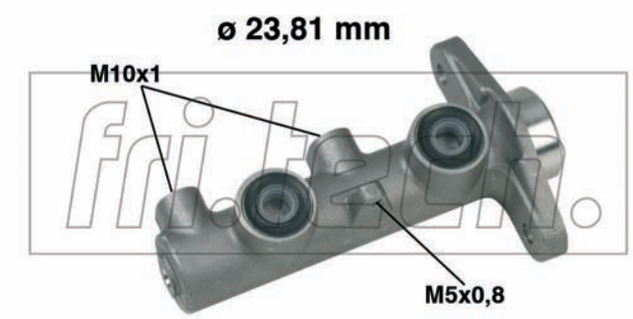

PF516

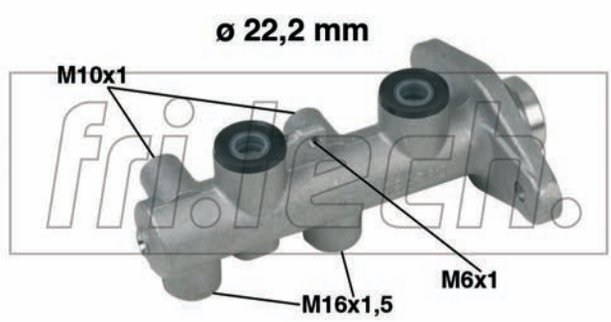

PF517

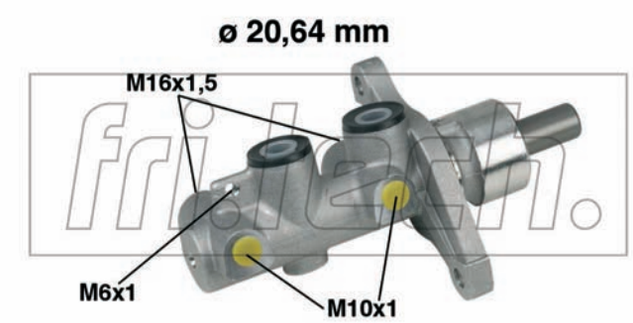

PF518

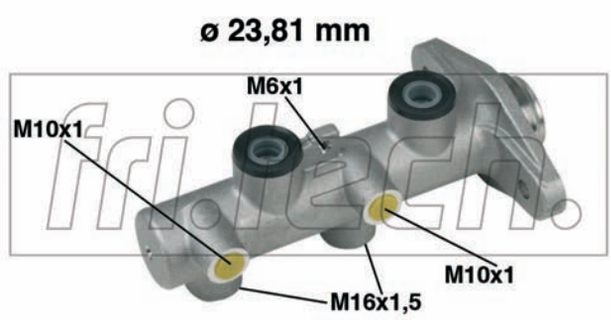

PF519

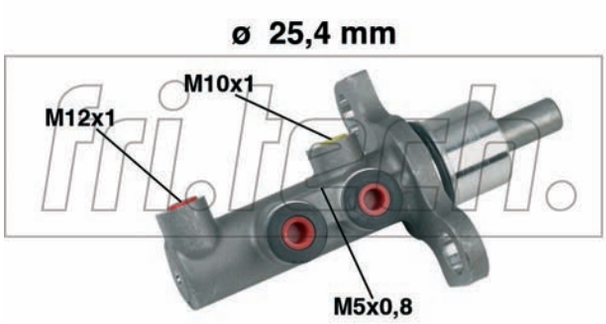

PF520

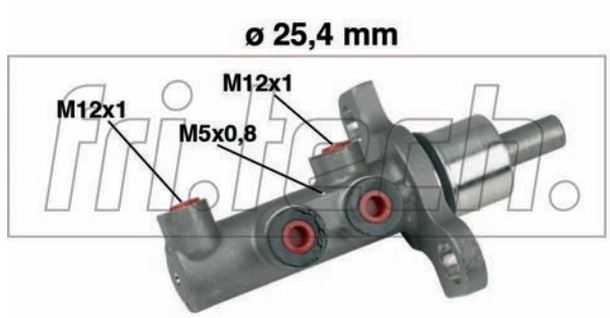

PF521

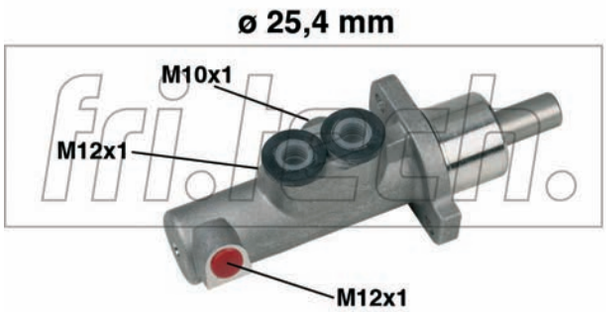

PF522

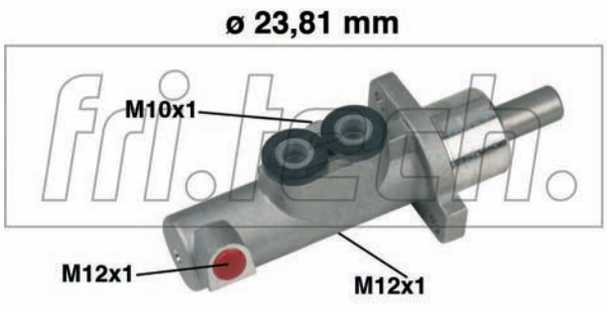

PF523

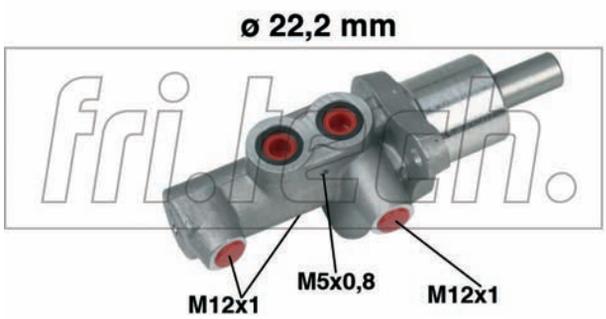

PF524

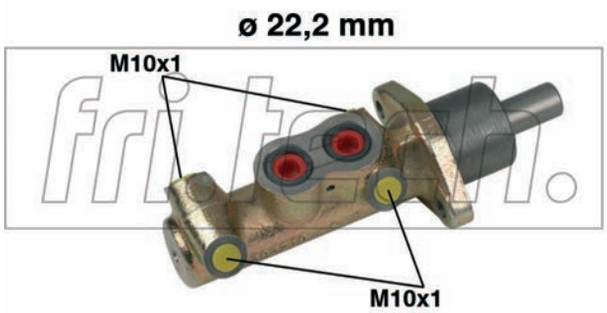

PF525

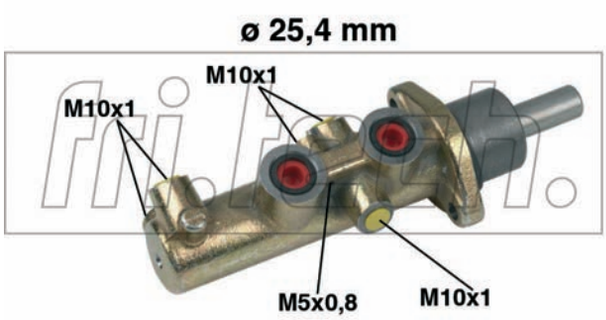

PF526

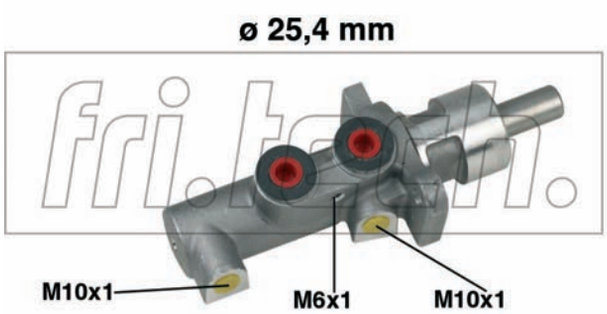

PF527

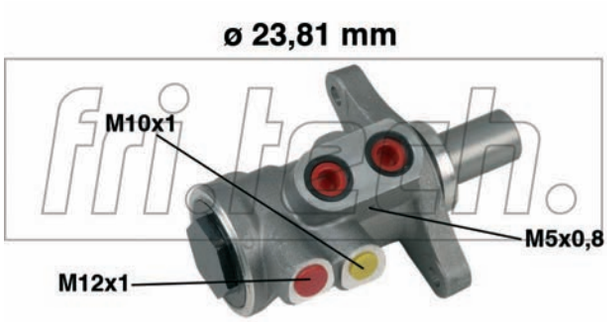

PF528

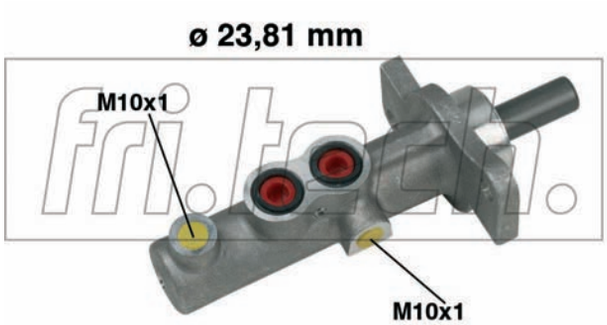

PF529

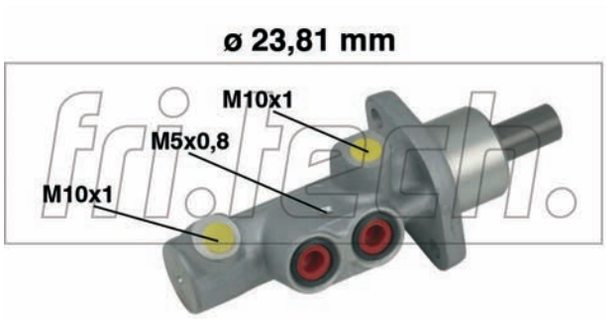

PF530

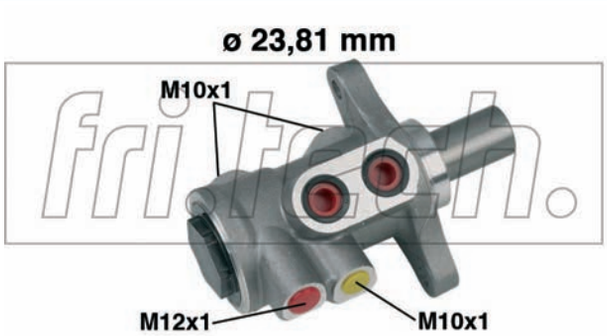

PF531

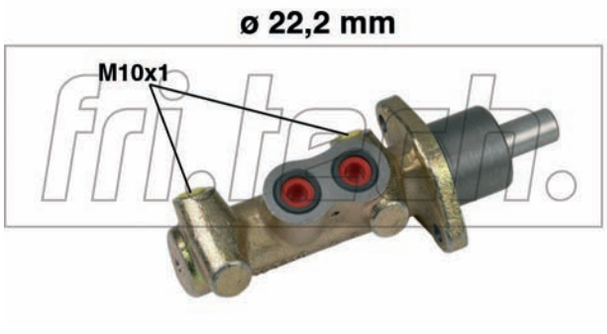

PF532

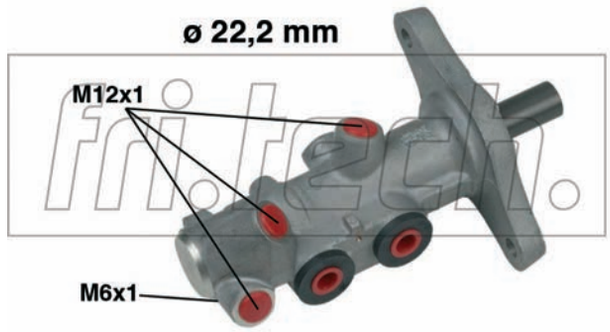

PF533

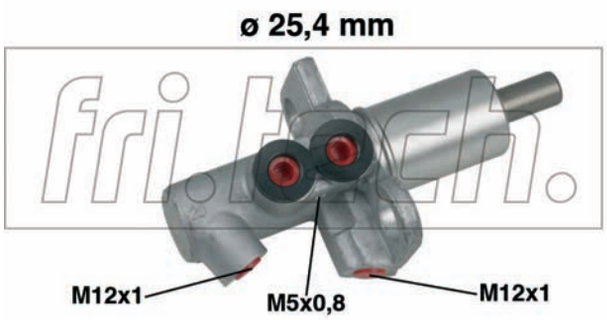

PF534

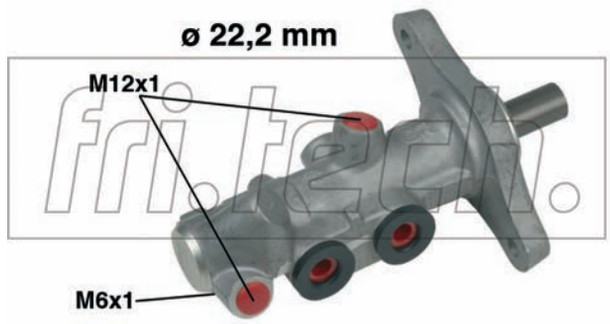

PF535

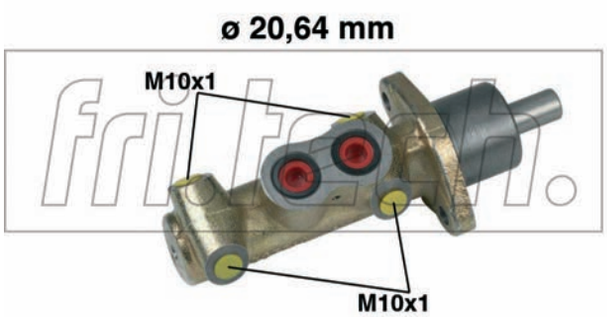

PF536

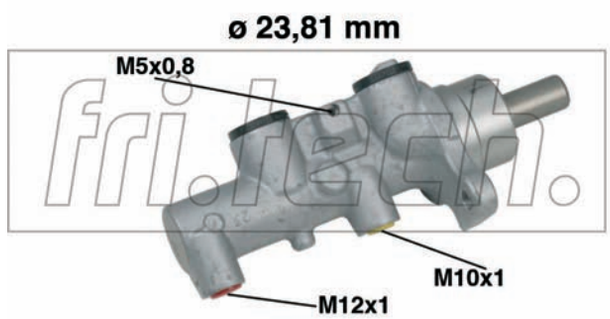

PF537

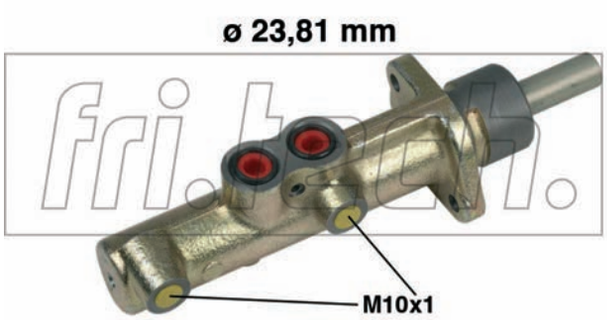

PF538

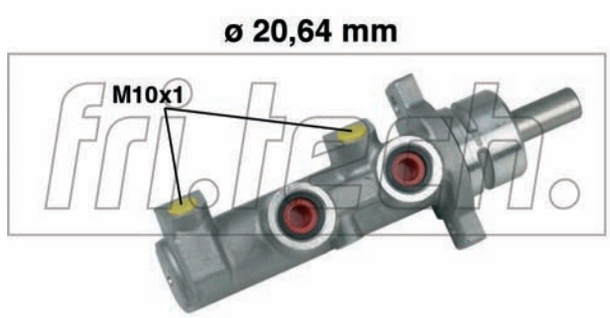

PF539

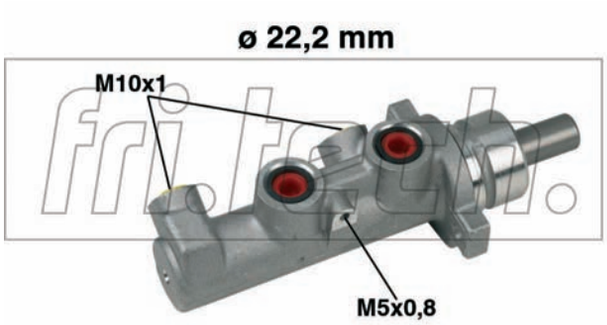

PF540

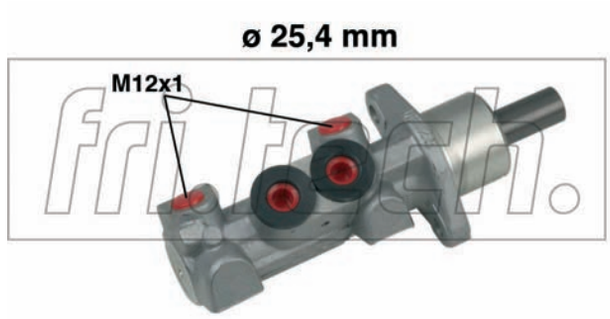

PF541

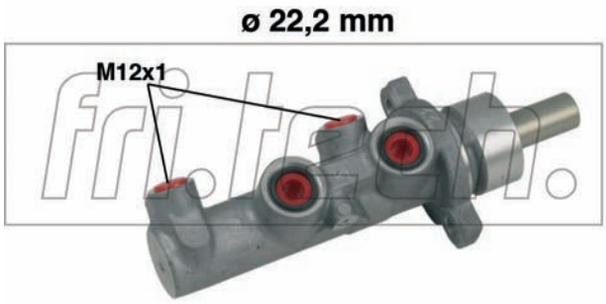

PF542

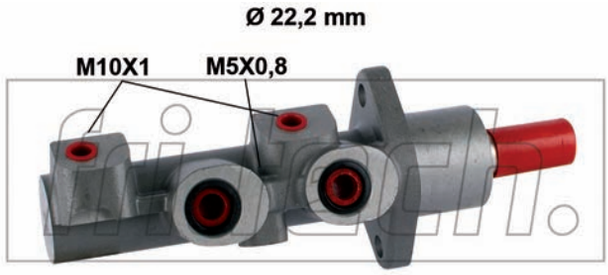

PF543

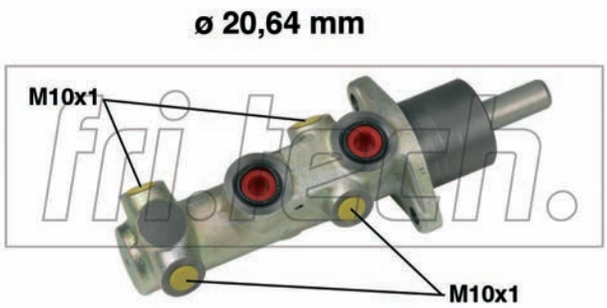

PF544

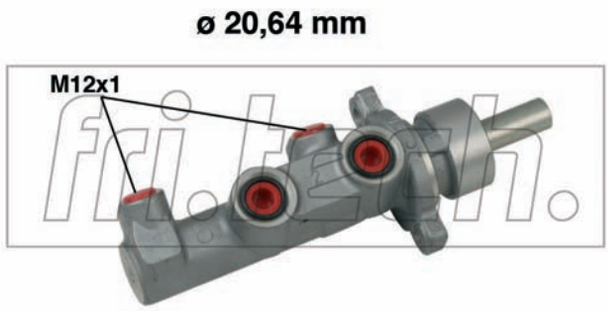

PF545

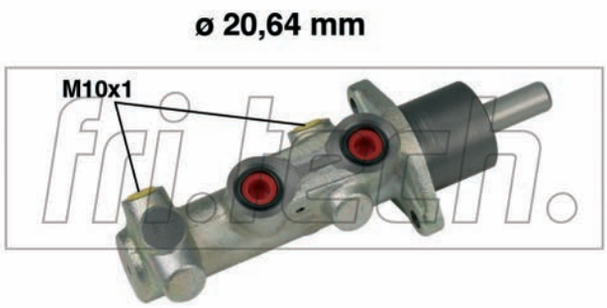

PF546

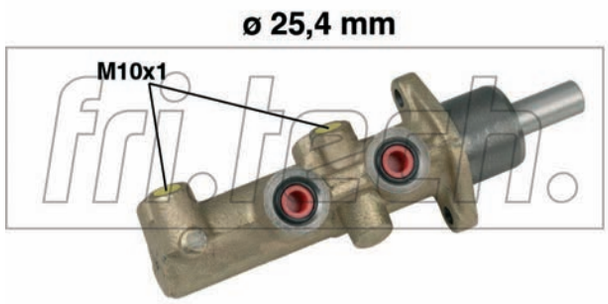

PF547

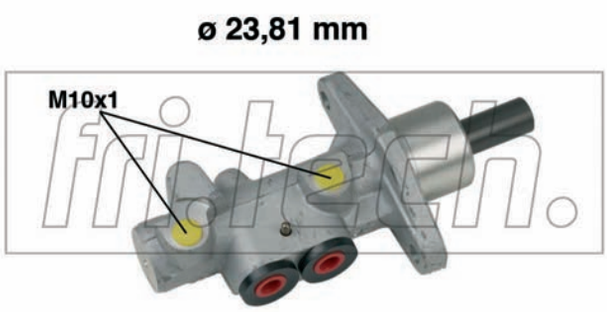

PF548

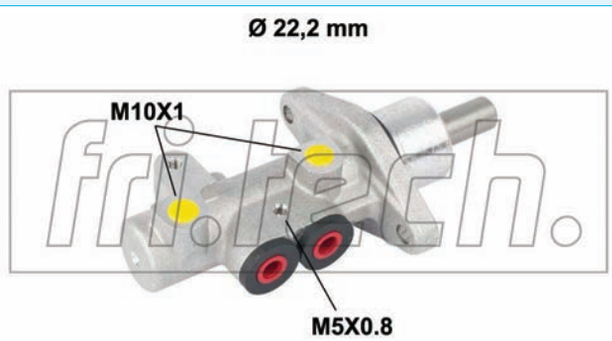

PF549

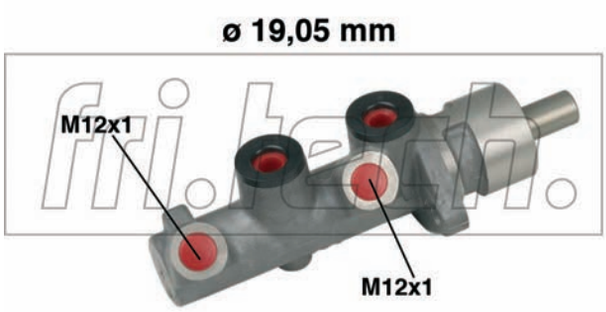

PF550

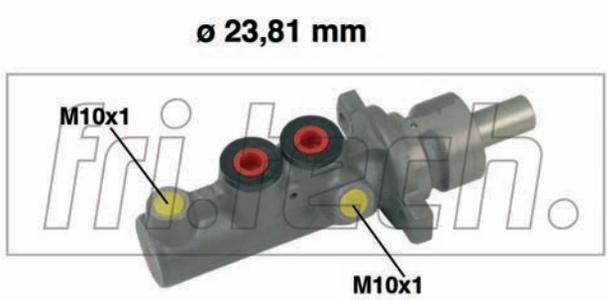

PF551

ø 20,64 mm

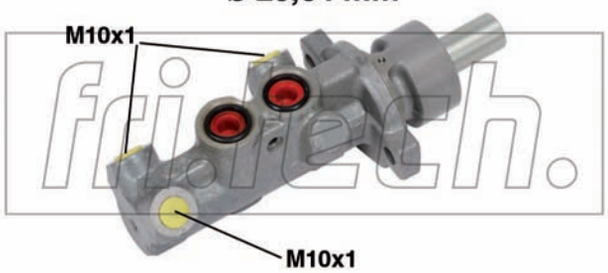

PF552

ø 20,64 mm

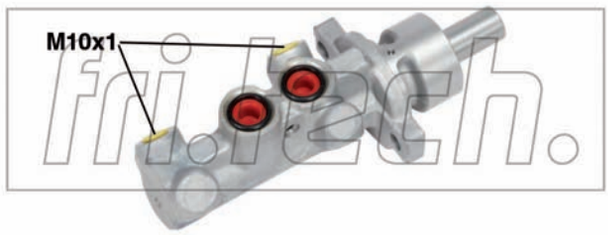

PF553

ø 23,81 mm

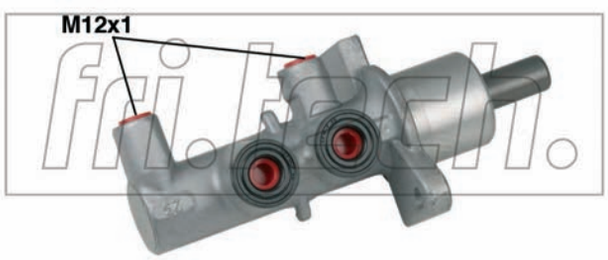

PF557

ø 25,4 mm

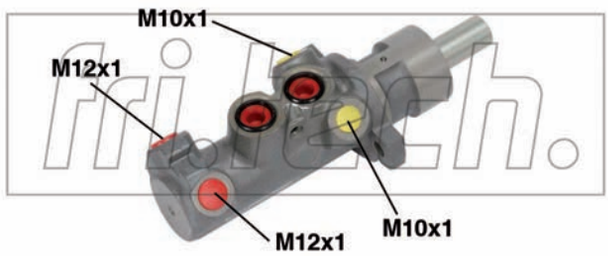

PF558

ø 23,81 mm

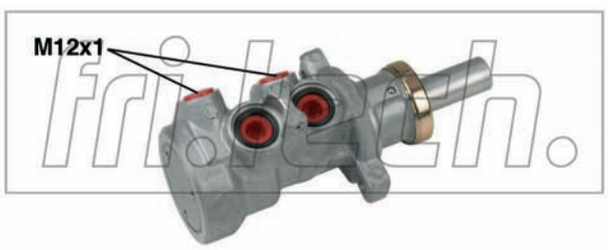

PF560

ø 22,2 mm

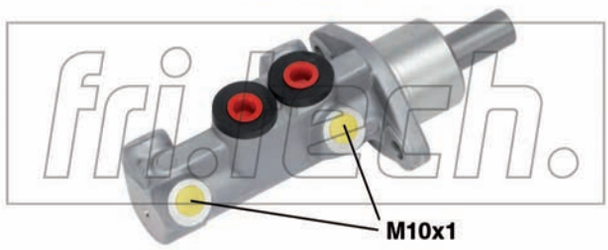

PF571

ø 23,81 mm

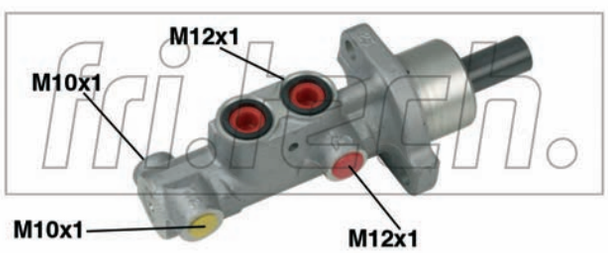

PF573

ø 25,4 mm

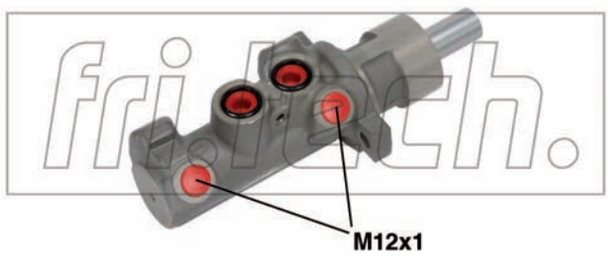

PF574

ø 23,81 mm

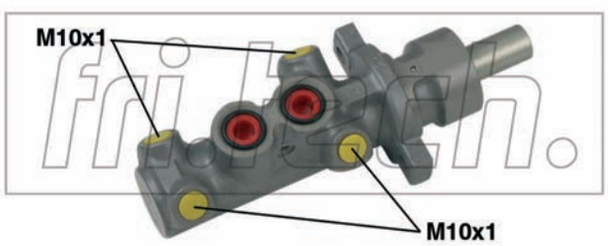

PF575

ø 25,4 mm

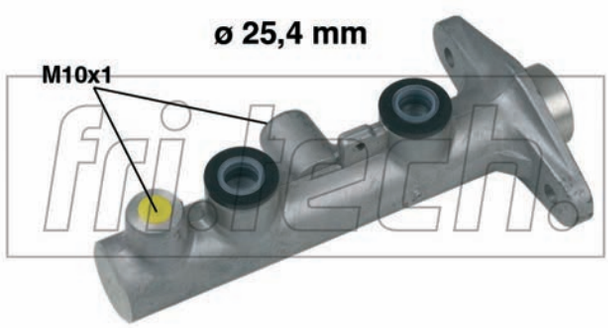

PF576

PF577

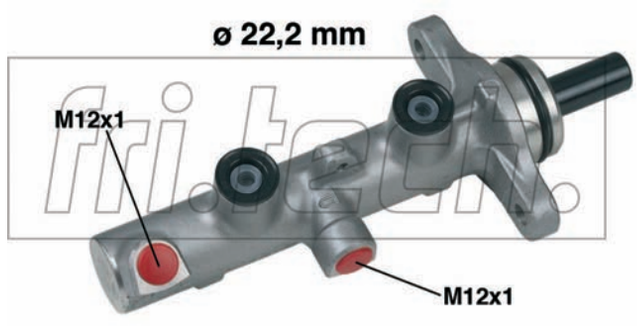

PF578

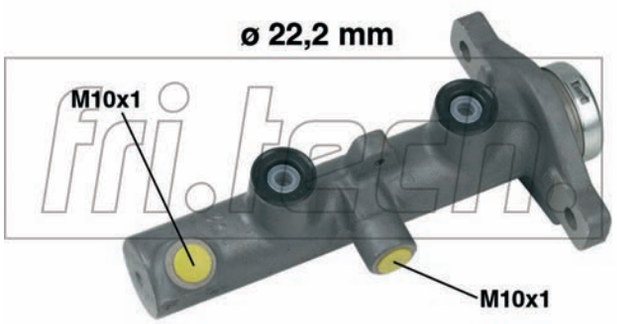

PF579

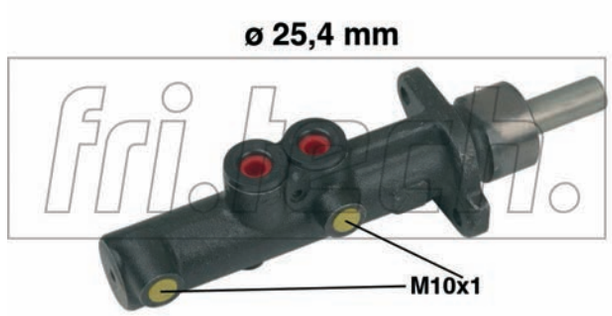

PF580

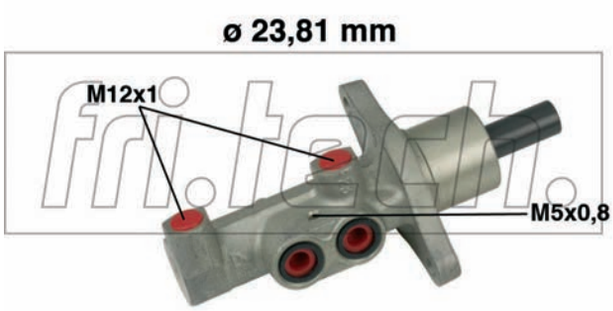

PF581

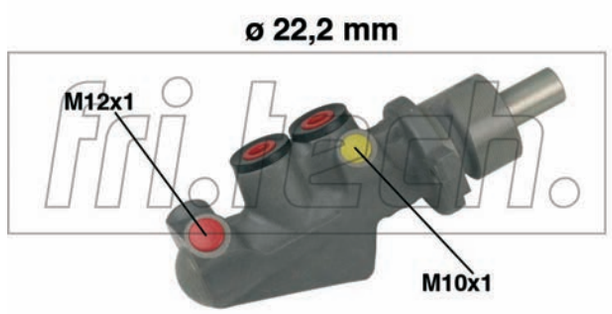

PF582

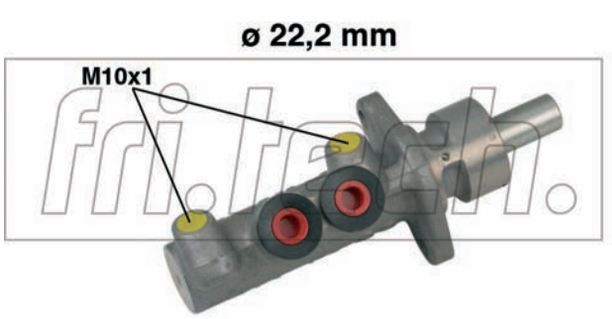

PF583

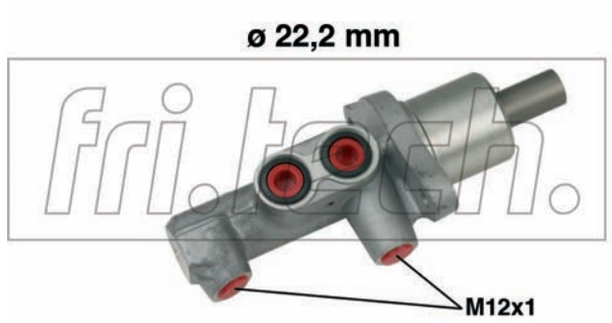

PF584

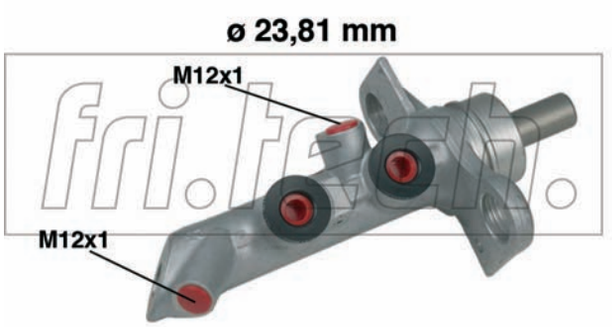

PF585

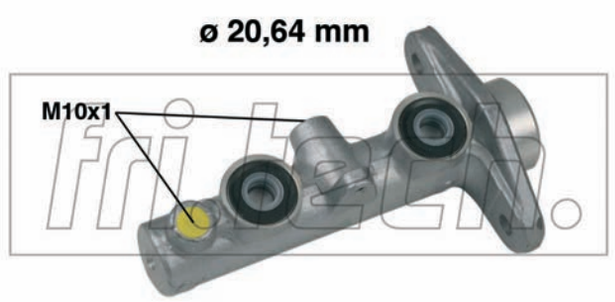

PF586

ø 22 mm

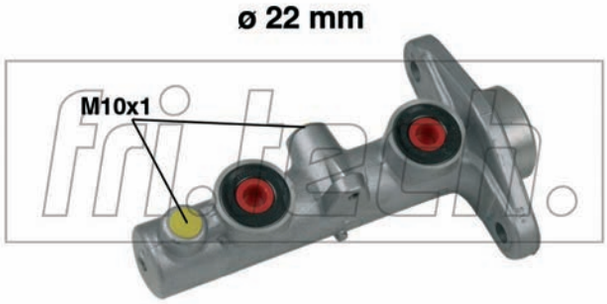

PF587

ø 22,2 mm

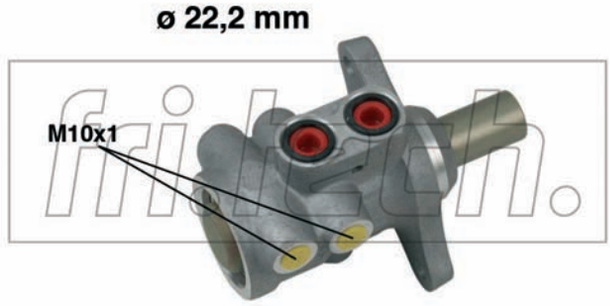

PF589

ø 22,2 mm

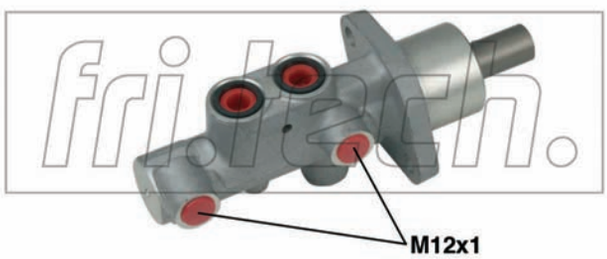

PF590

ø 25,4 mm

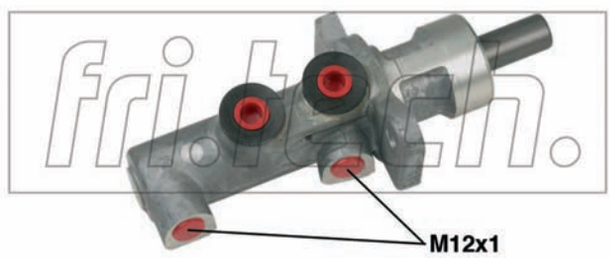

PF591

ø 20,64 mm

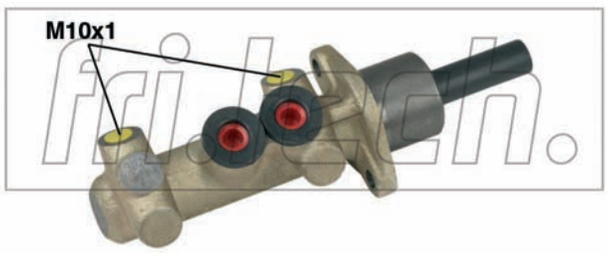

PF592

ø 25,4 / 20,64 mm

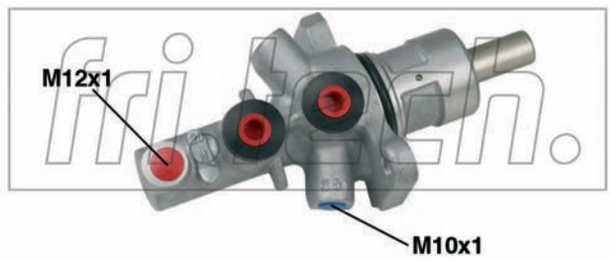

PF593

ø 25,4 mm

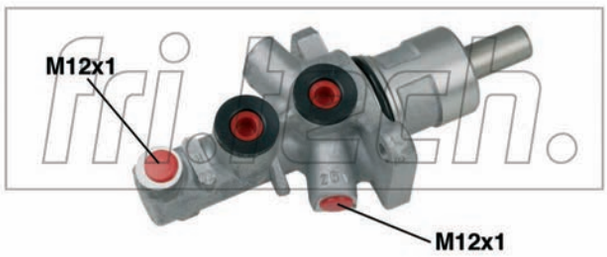

PF594

ø 23,81 / 20,64 mm

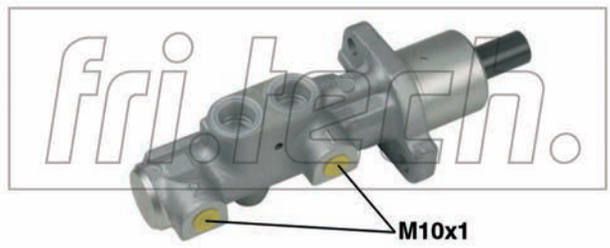

PF595

ø 23,81 / 20,64 mm

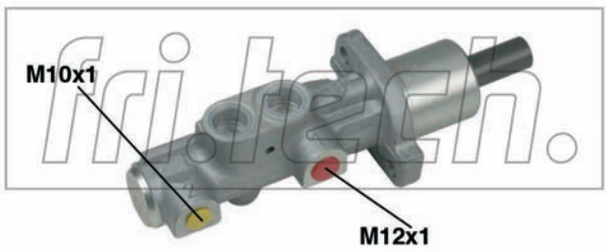

PF596

ø 19,05 mm

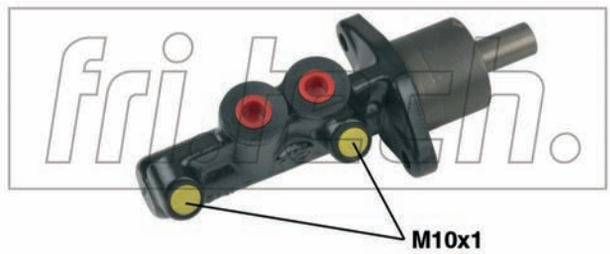

PF597

ø 20,64 mm

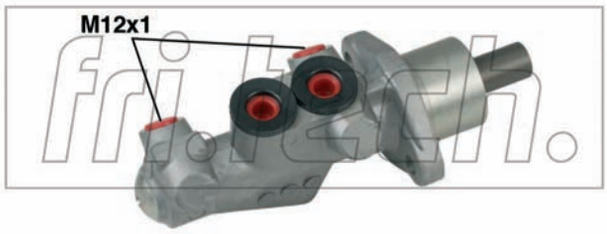

PF598

ø 22,2 mm

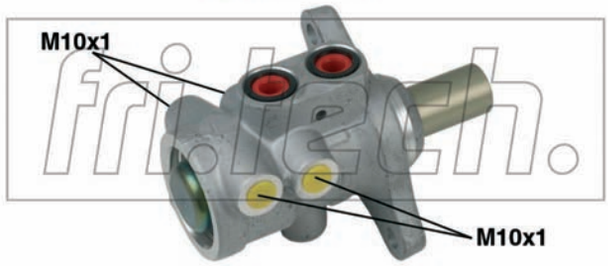

PF599

ø 25,4 mm

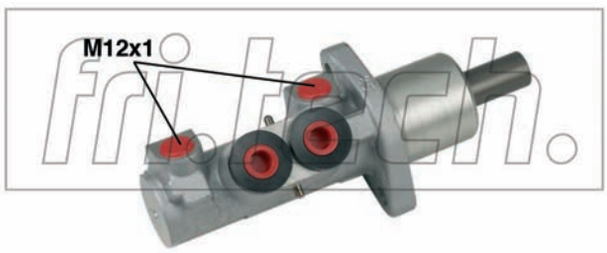

PF600

ø 23,81 mm

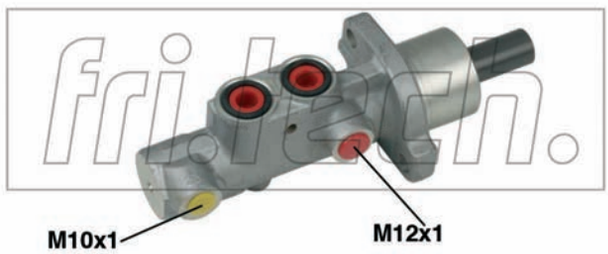

PF601

ø 23,81 mm

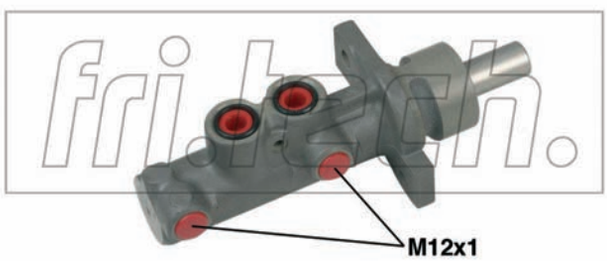

PF602

ø 22,2 mm

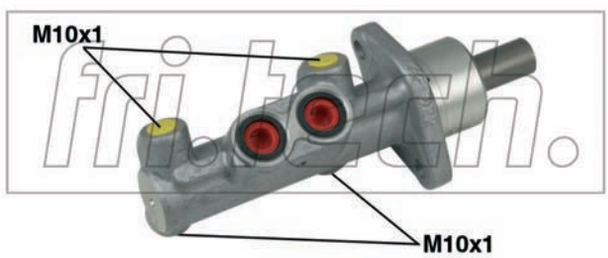

PF603

ø 23,81 mm

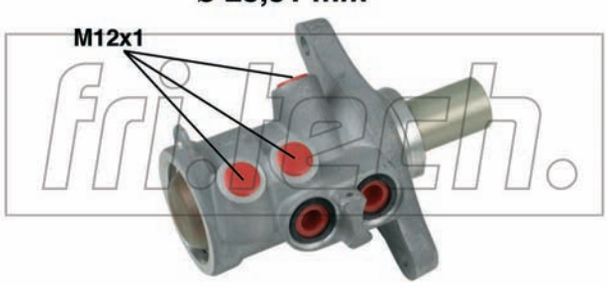

PF604

ø 25,4 mm

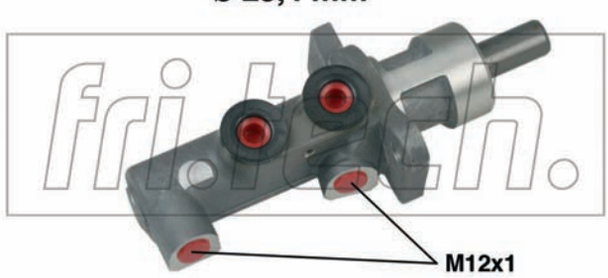

PF605

ø 23,81 mm

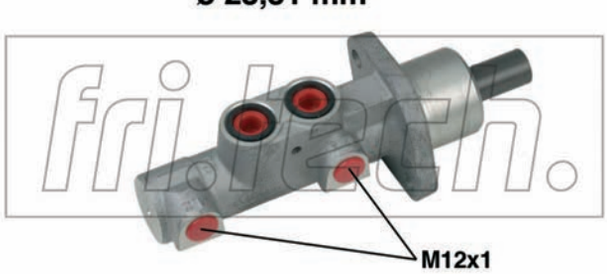

PF606

ø 25,4 mm

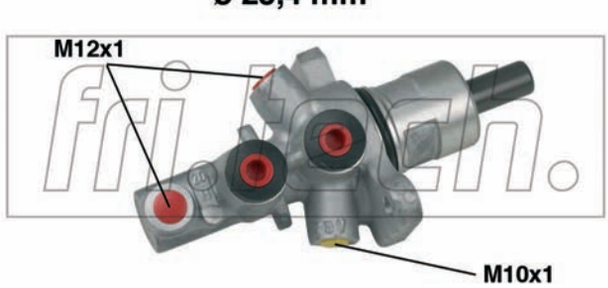

PF608

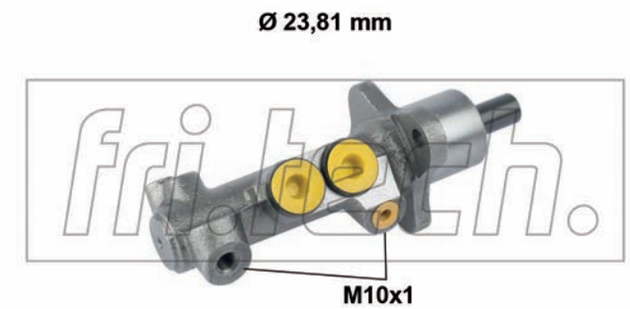

PF609

PF610

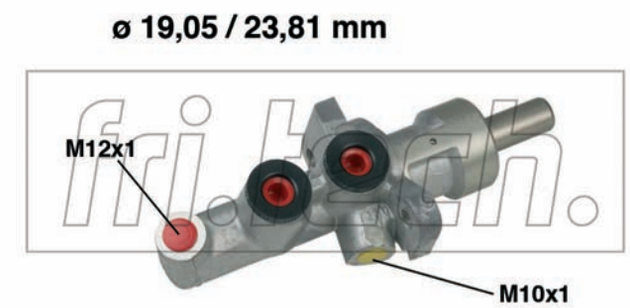

PF611

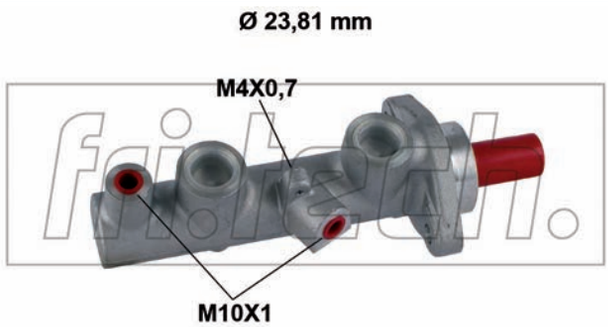

PF613

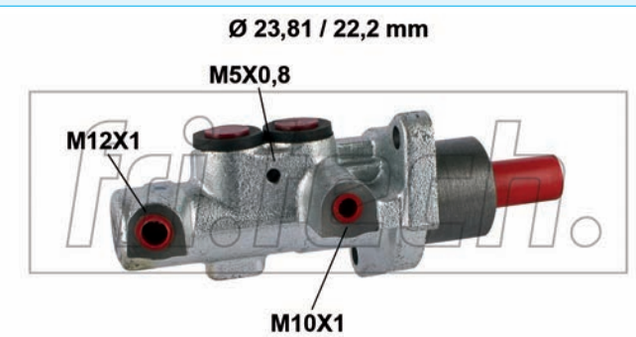

PF614

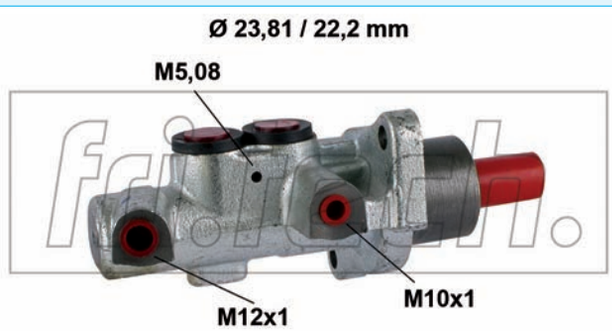

PF615

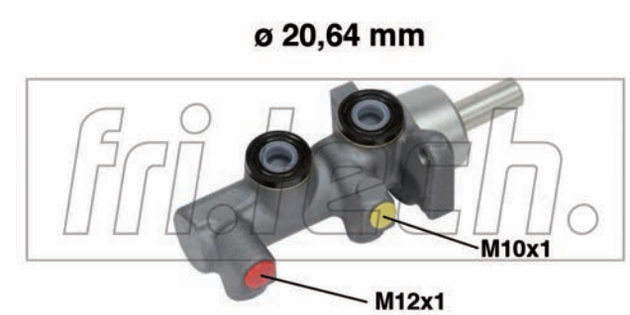

PF617

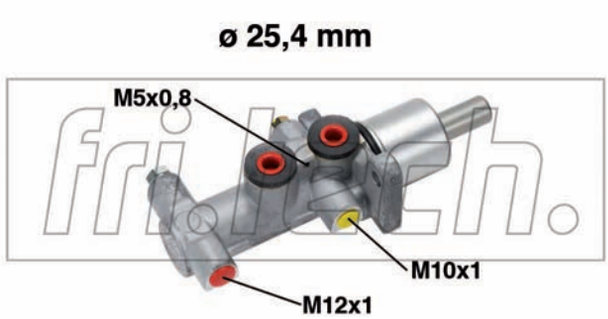

PF620

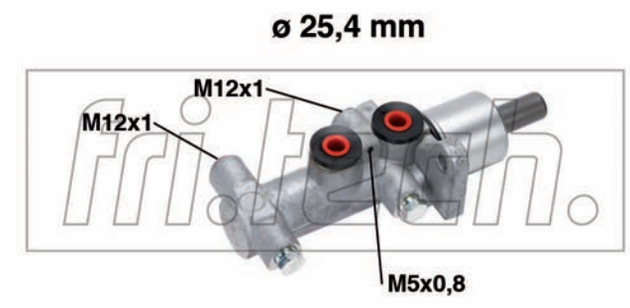

PF621

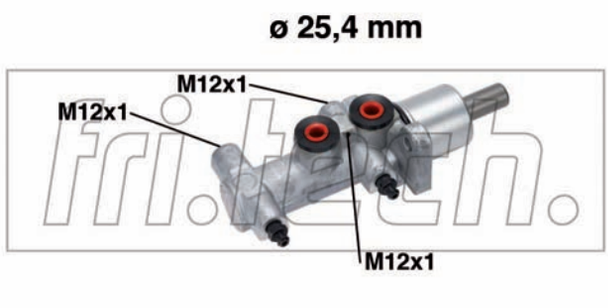

PF622

ø 20,64 mm

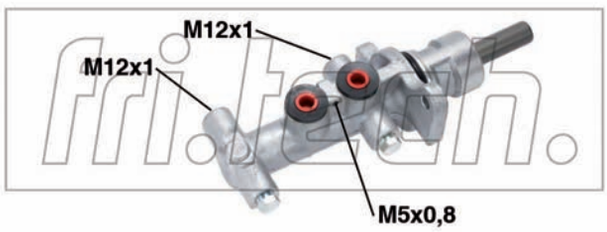

PF623

ø 20,64 mm

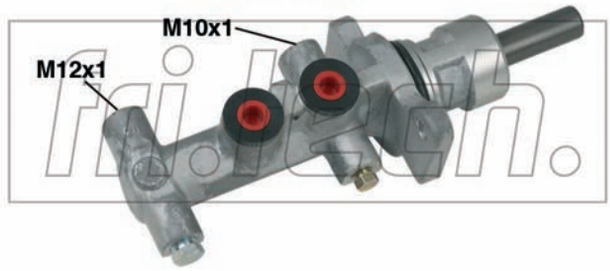

PF624

ø 22,2 mm

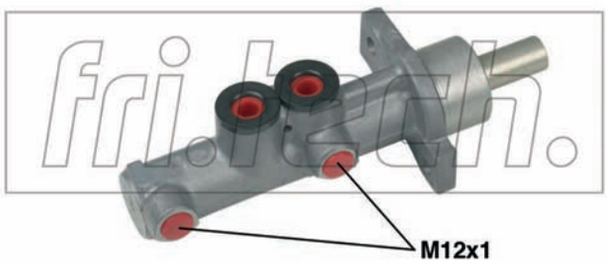

PF625

ø 19,05 / 23,81 mm

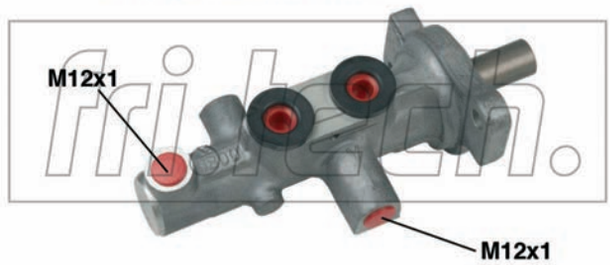

PF626

Ø 25,4 mm - Ø 22,2 mm

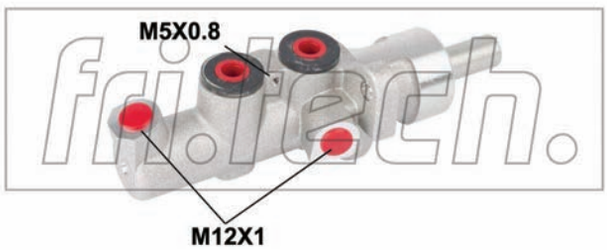

PF627

ø 23,81 / 22,2 mm

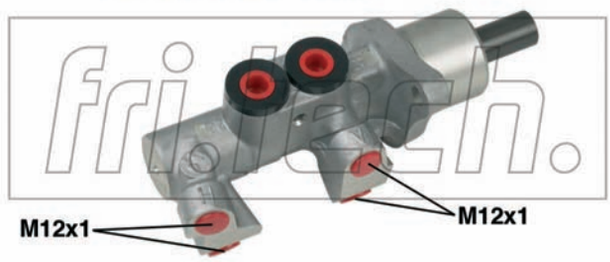

PF628

ø 25,4 mm

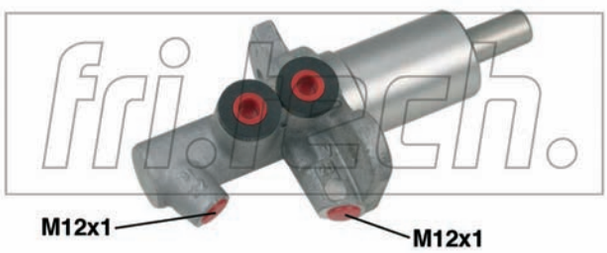

PF629

ø 20,64 mm

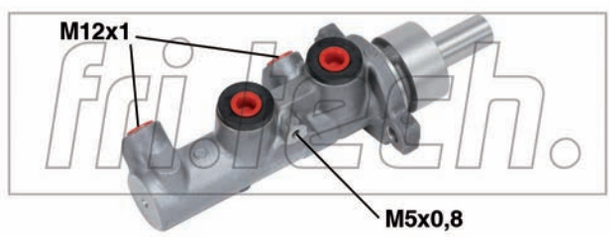

PF630

ø 22,2 mm

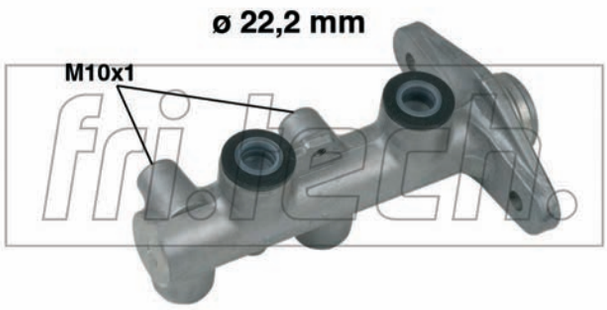

PF631

ø 23,81 mm

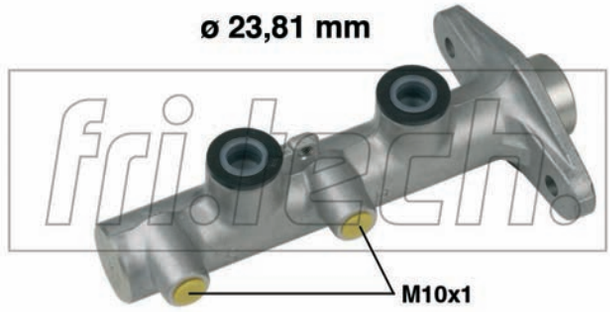

PF632

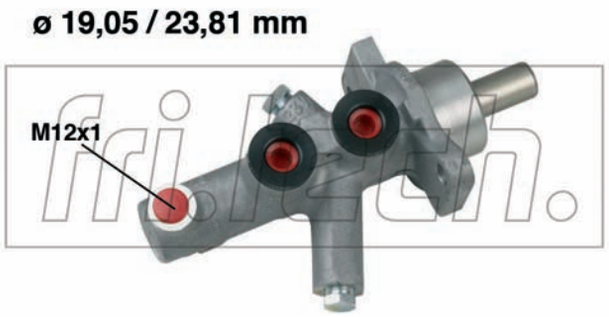

PF633

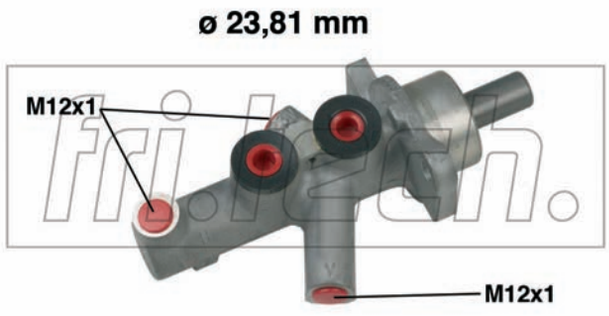

PF634

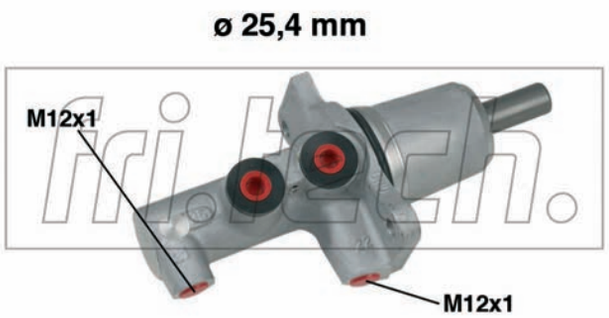

PF635

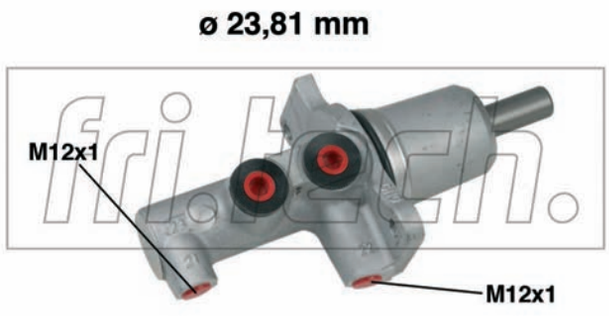

PF636

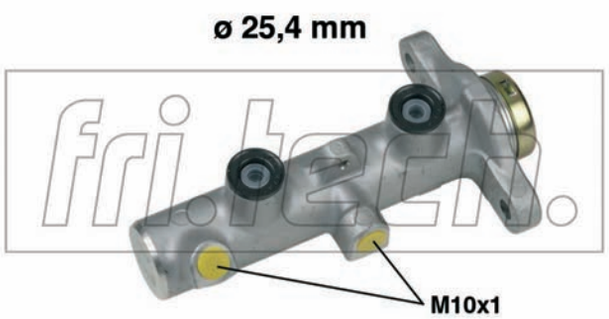

PF637

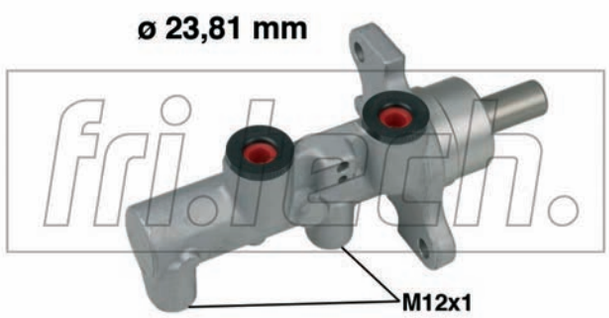

PF638

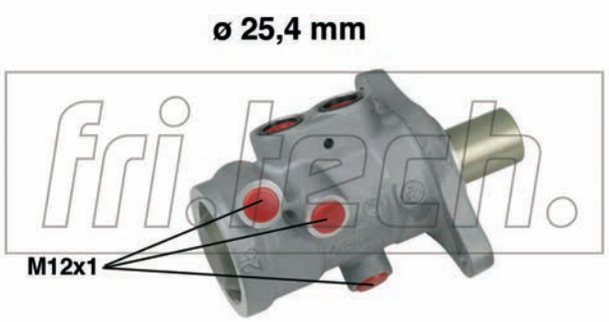

PF639

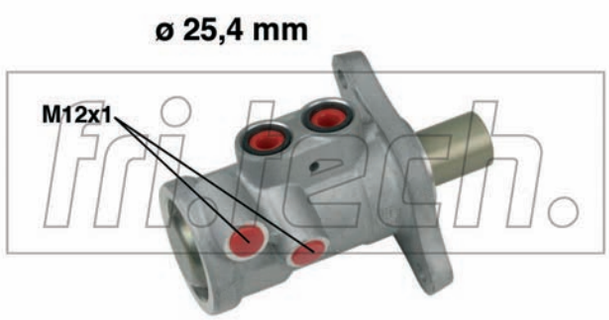

PF640

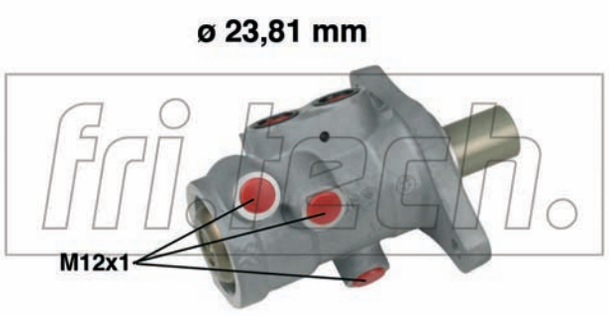

PF641

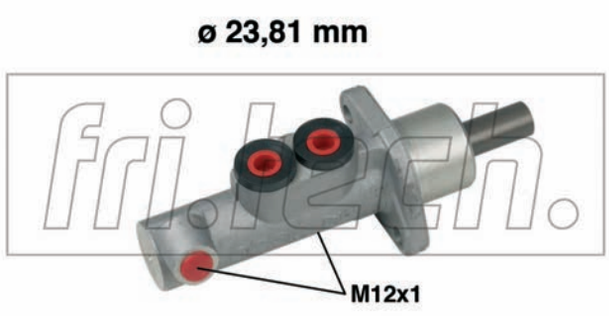

PF642

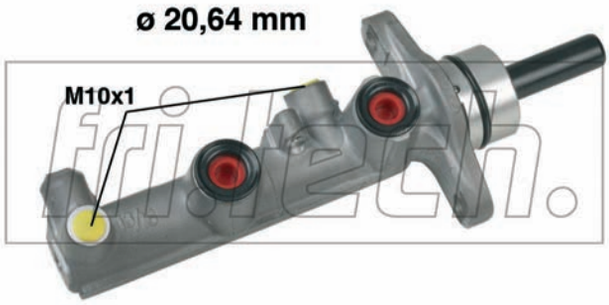

PF643

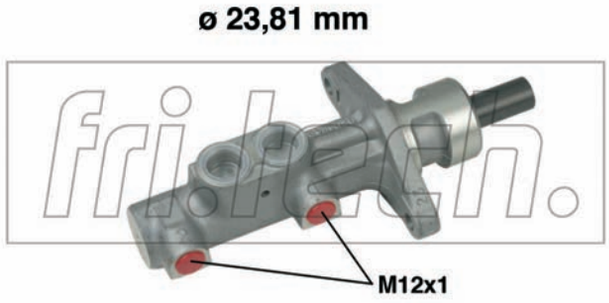

PF644

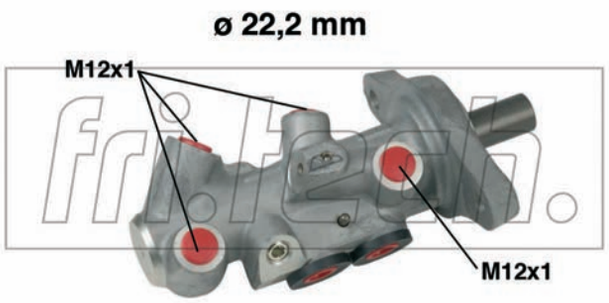

PF645

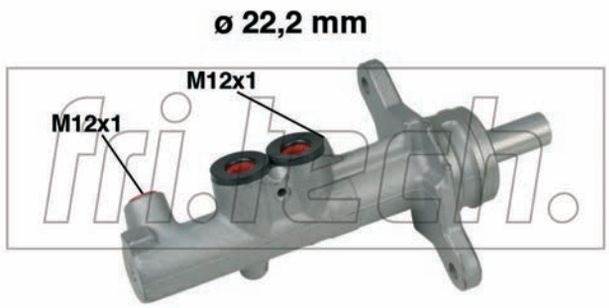

PF646

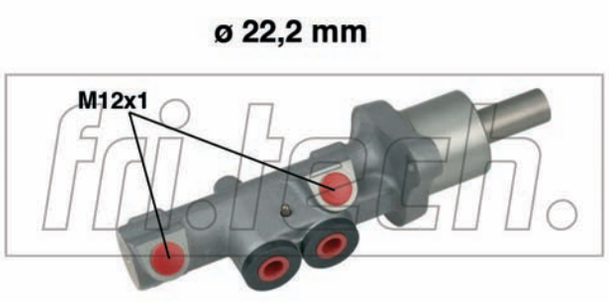

PF647

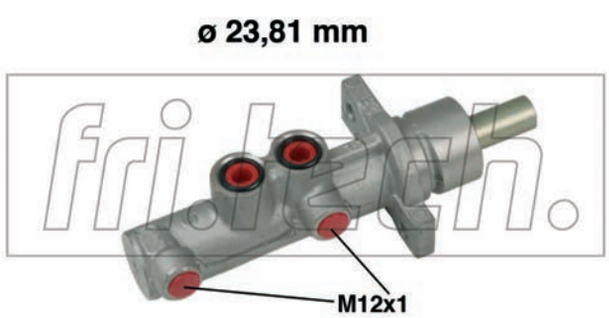

PF650

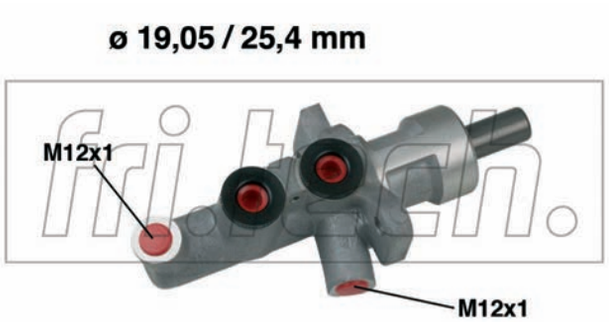

PF653

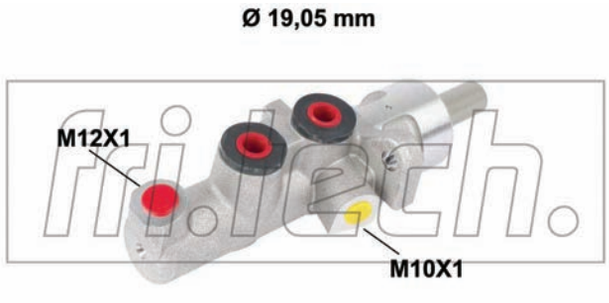

PF654

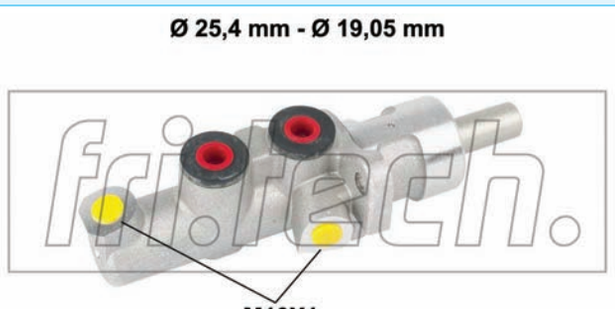

PF655

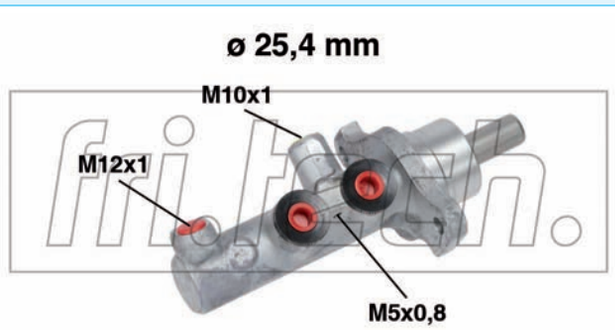

PF656

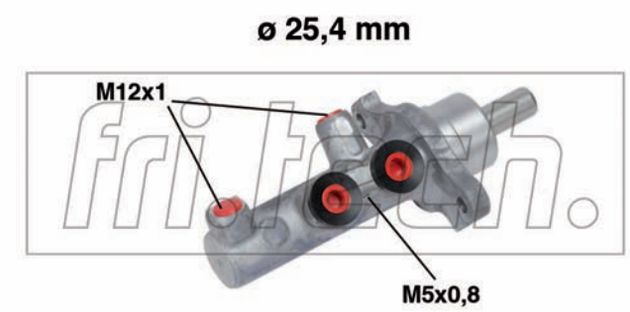

PF657

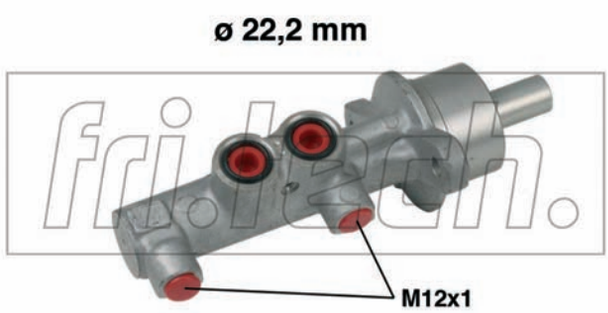

PF658

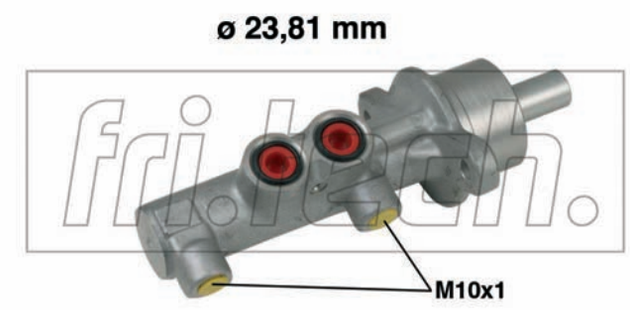

PF659

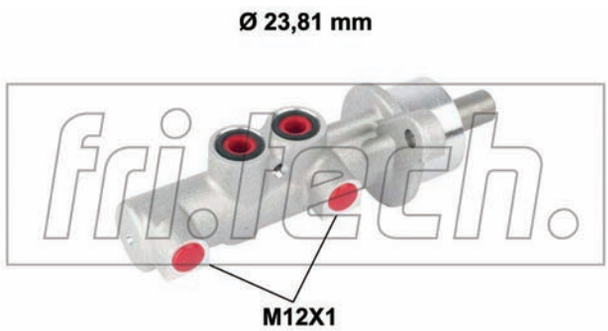

PF660

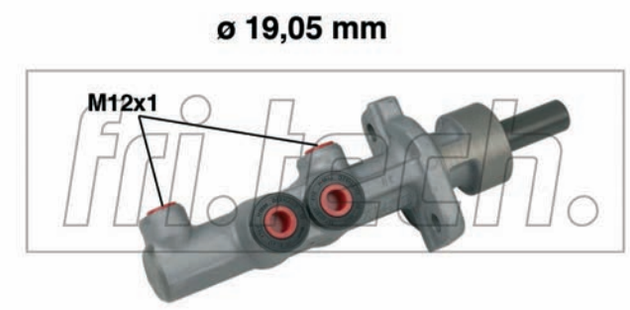

PF661

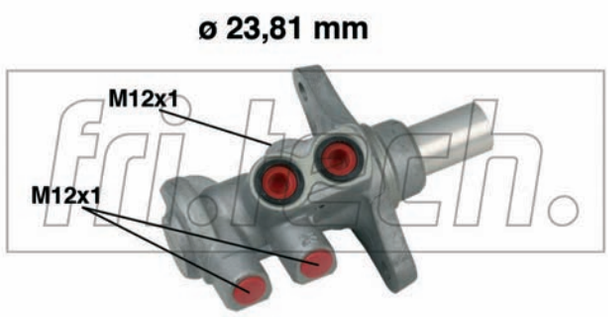

PF693

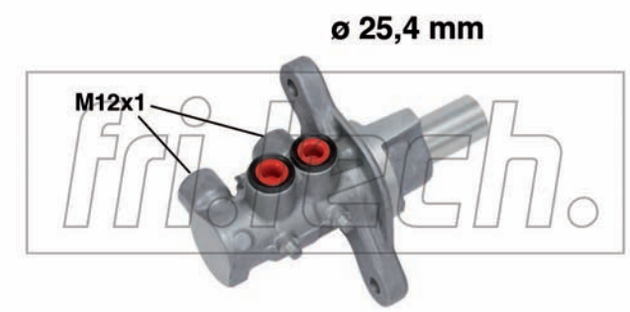

PF699

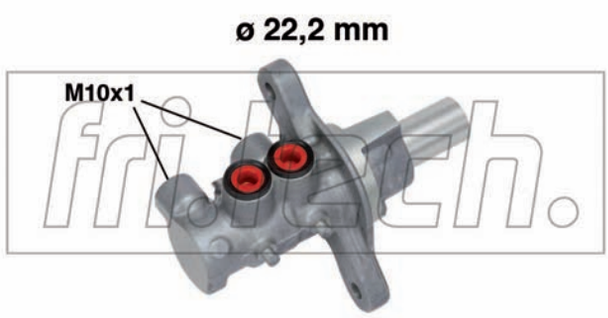

PF700

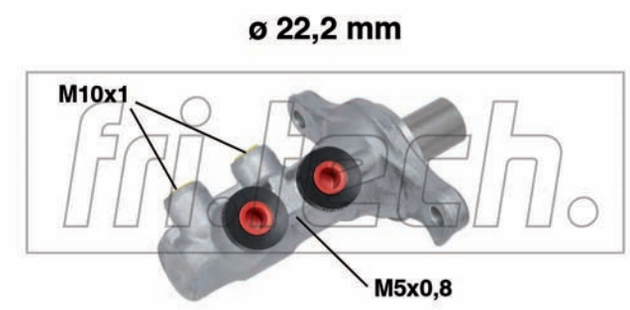

PF704

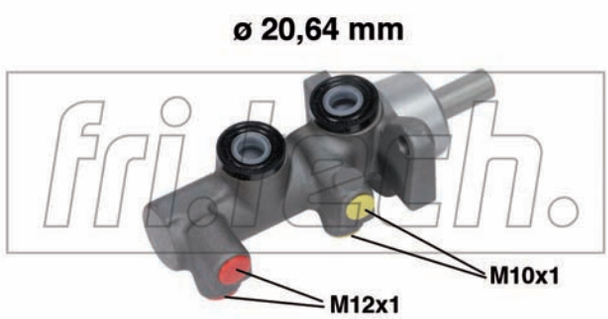

PF710

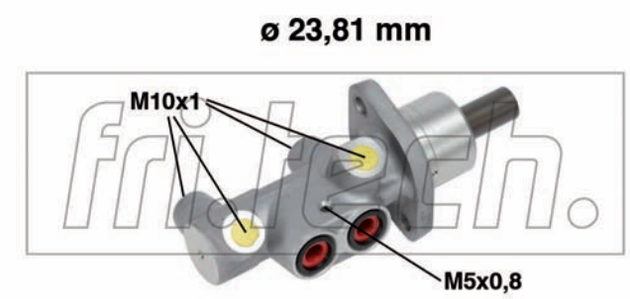

PF714

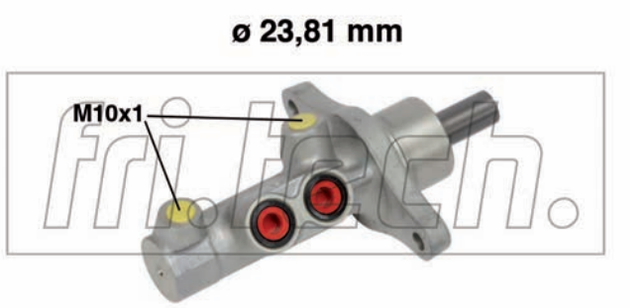

PF715

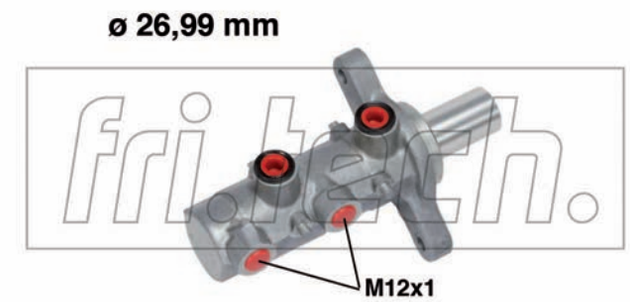

PF724

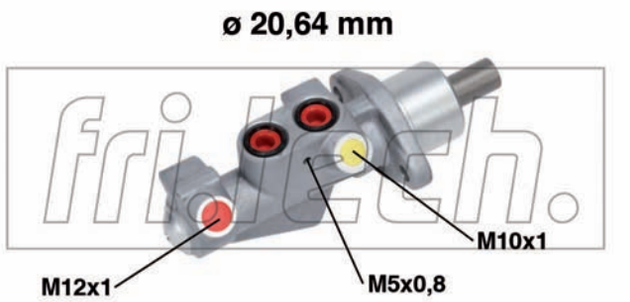

PF729

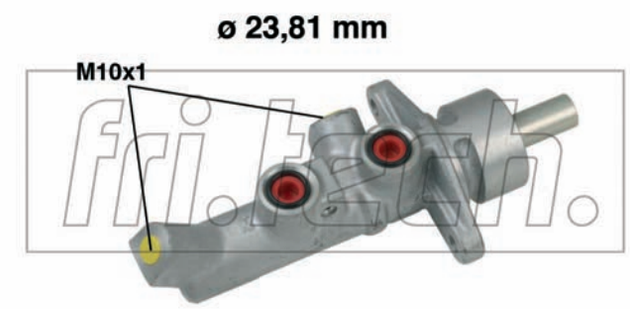

PF789

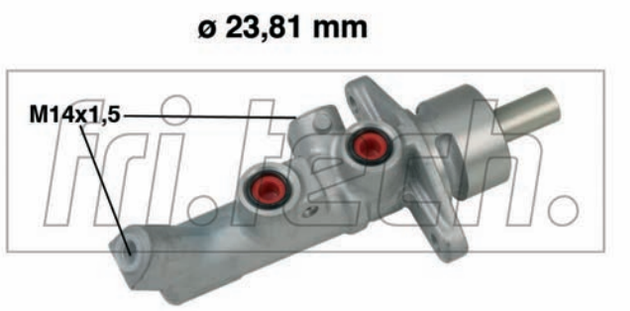

PF790

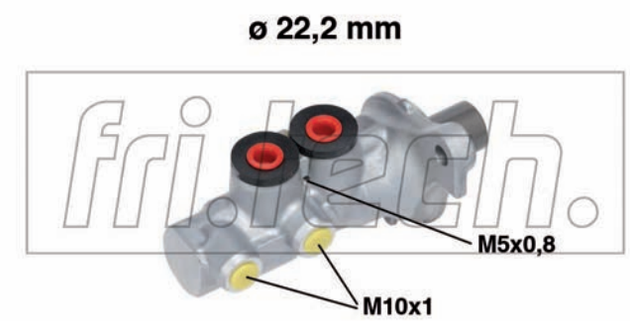

PF791

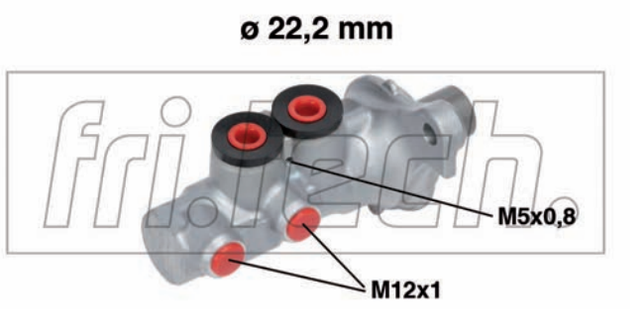

PF792

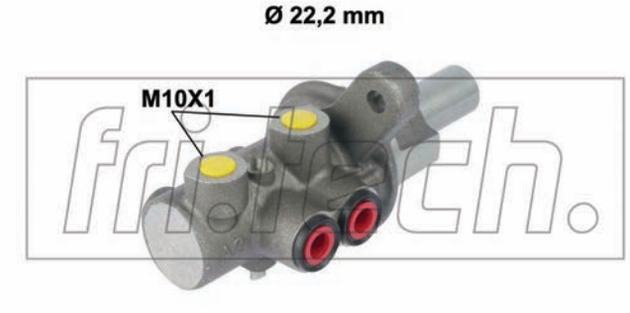

PF793

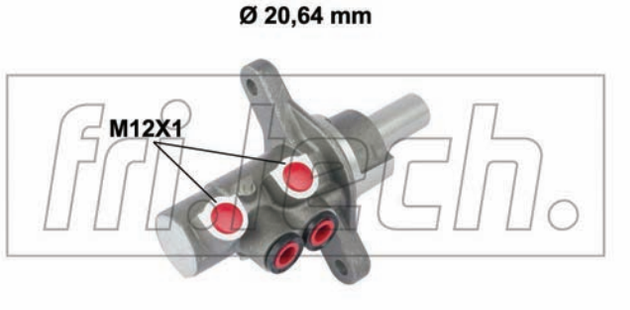

PF794

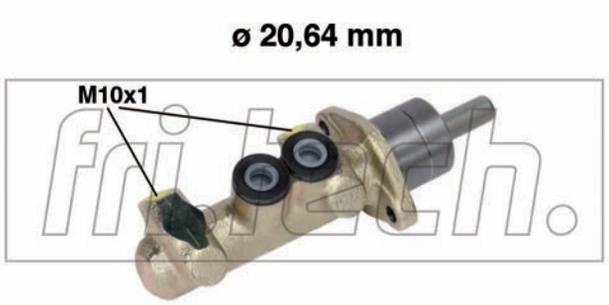

PF795

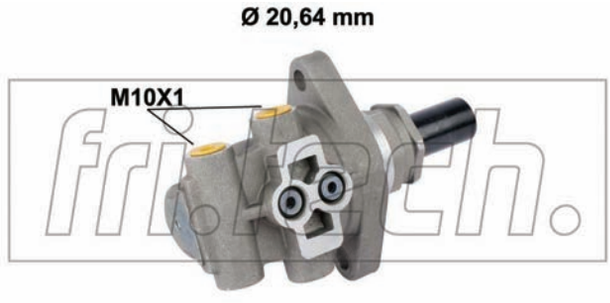

PF796

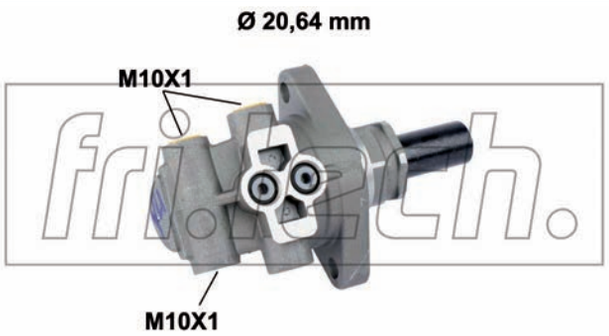

PF797

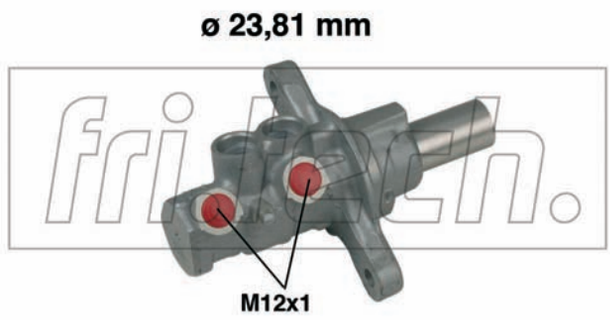

PF798

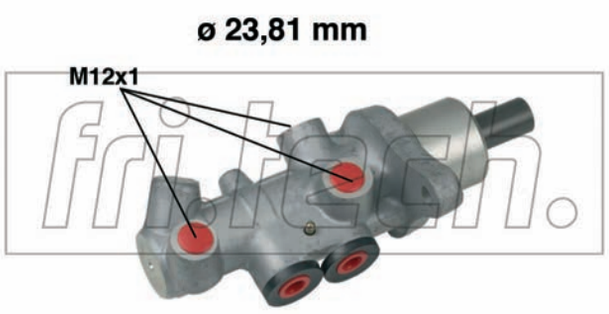

PF799

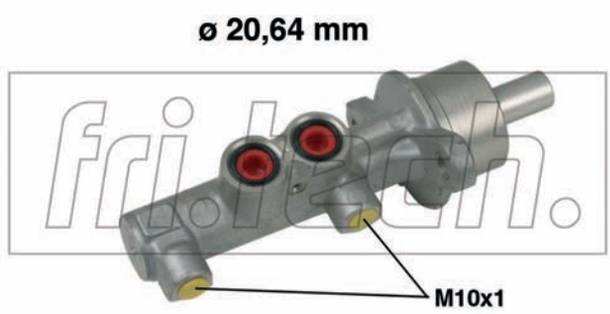

PF800

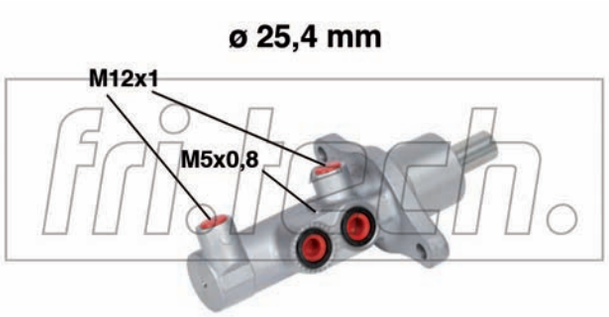

PF801

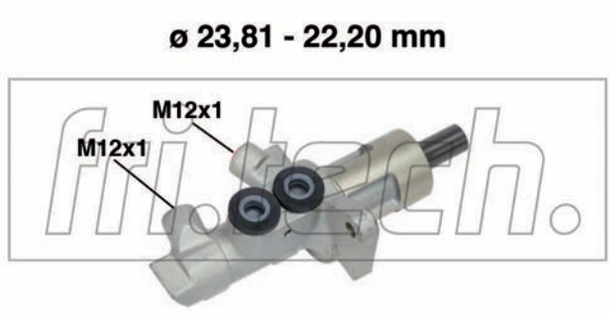

PF802

PF803

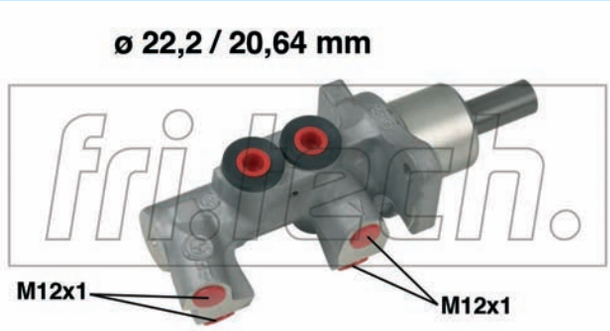

PF804

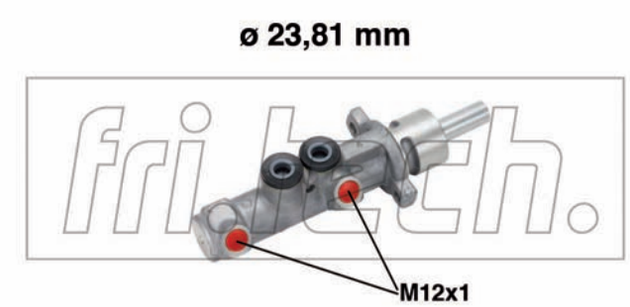

PF806

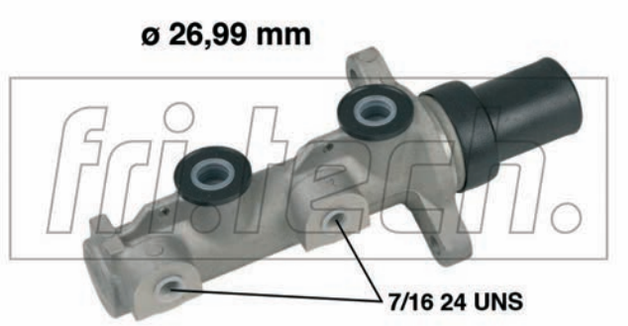

PF809

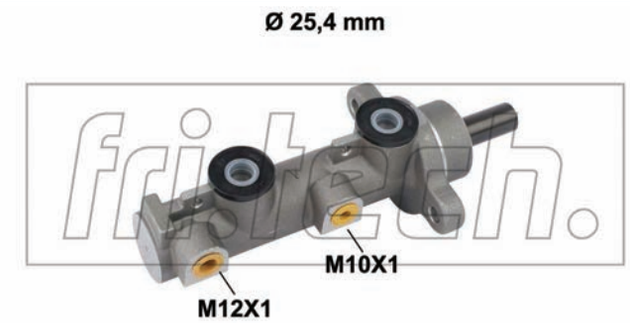

PF810

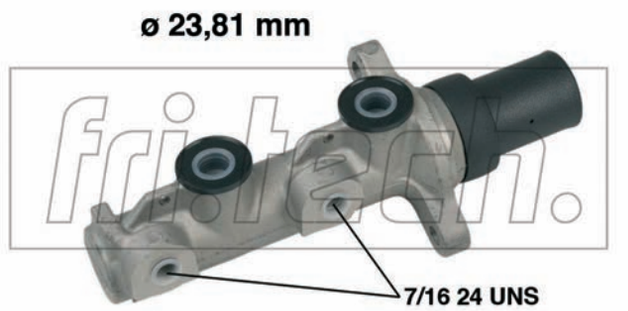

PF811

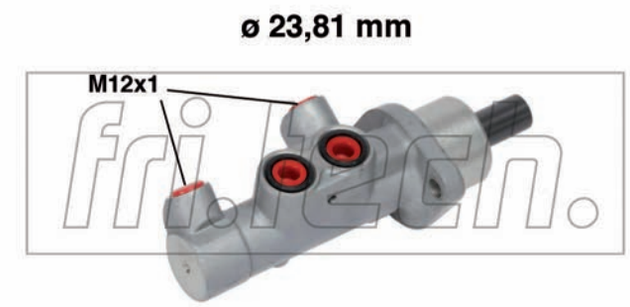

PF812

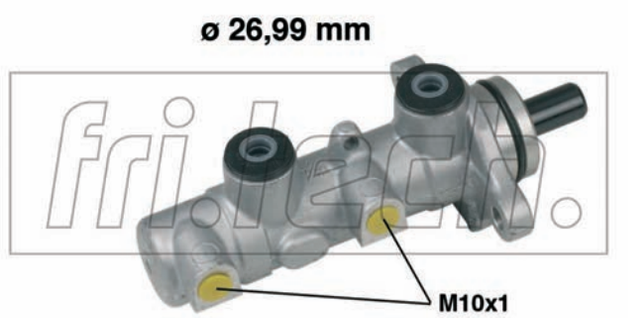

PF813

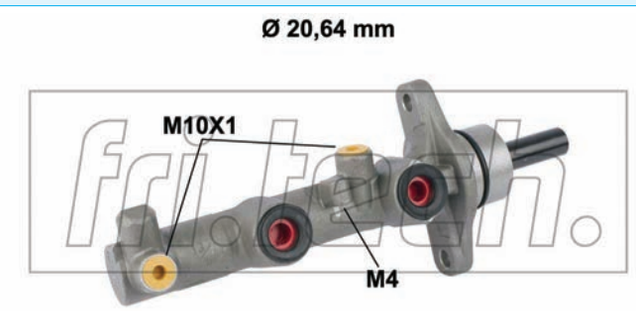

PF814

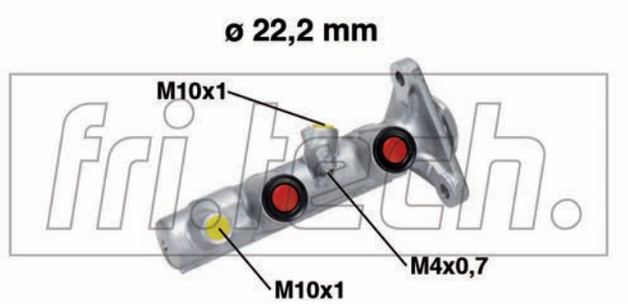

PF815

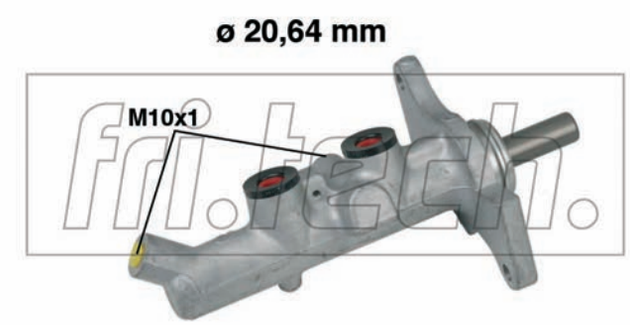

PF816

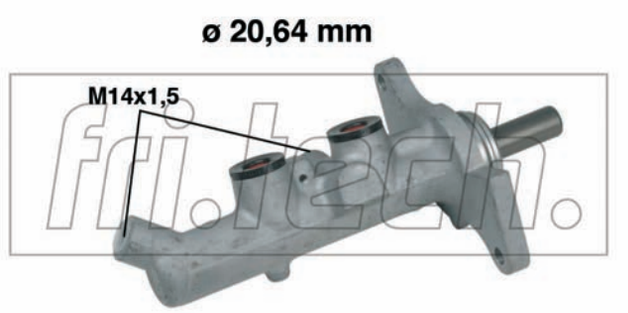

PF817

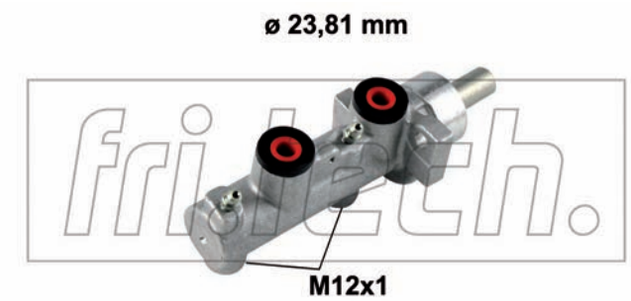

PF818

PF819

PF820

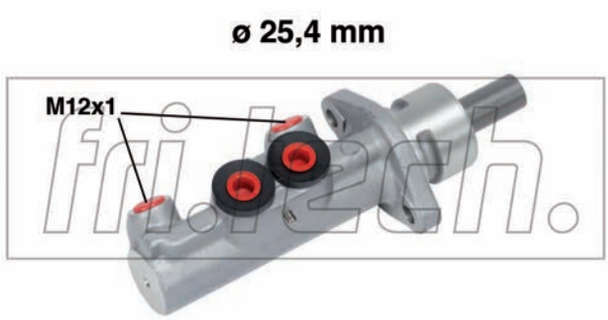

PF821

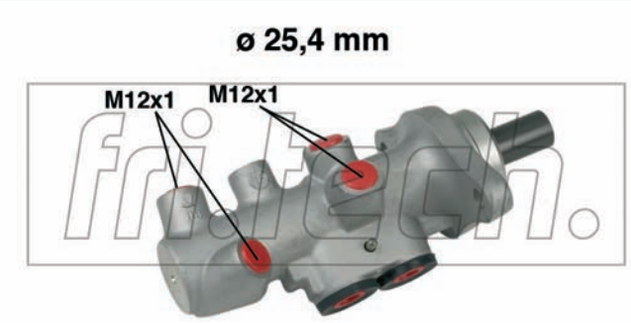

PF822

PF823

PF824

PF825

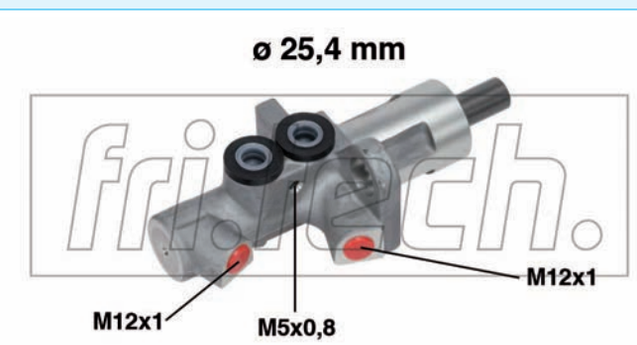

PF826

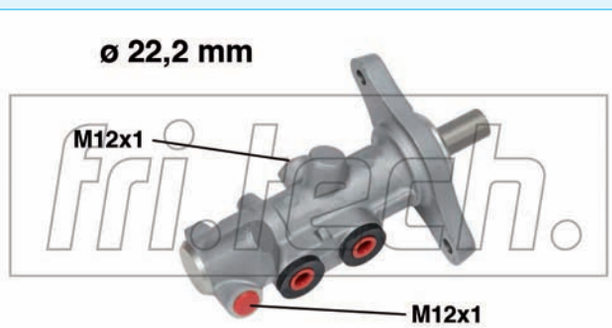

PF827

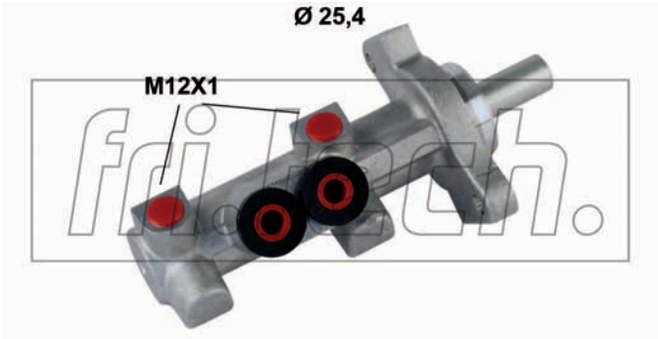

PF828

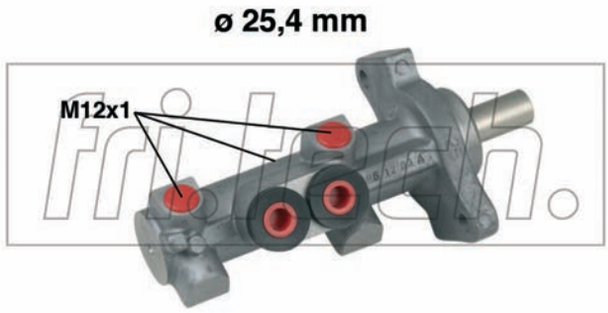

PF829

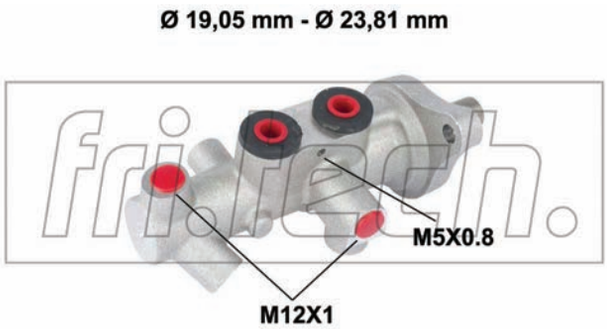

PF830

PF831

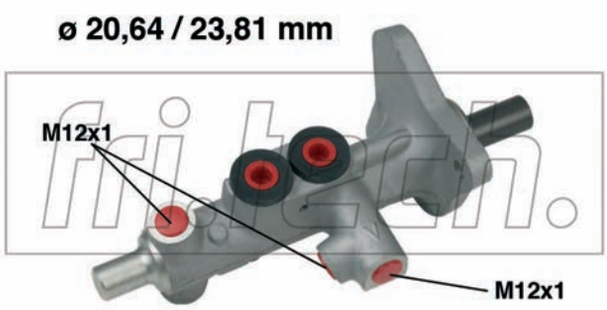

PF832

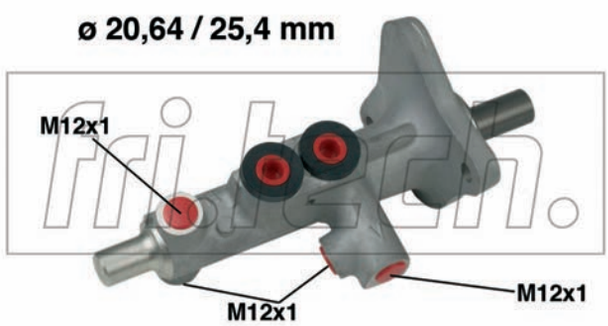

PF833

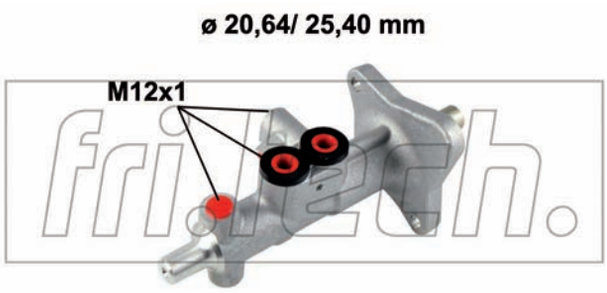

PF834

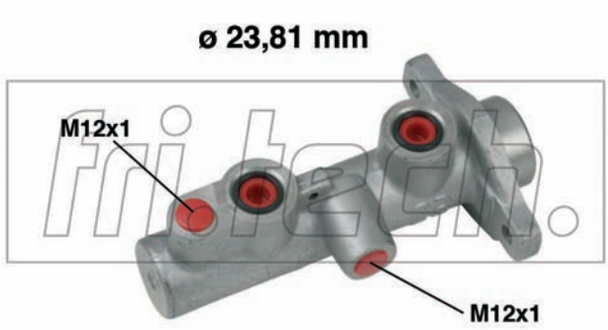

PF835

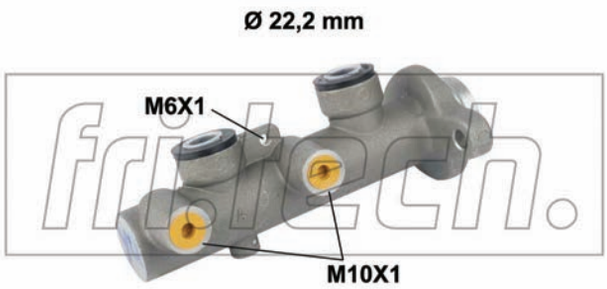

PF836

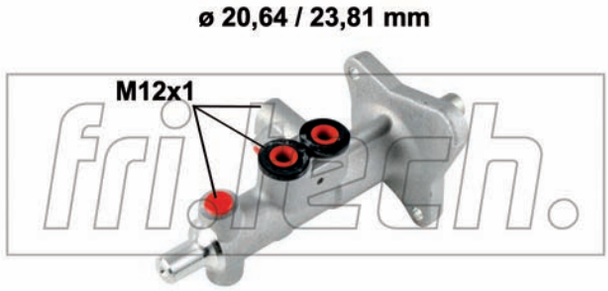

PF837

ø 23,81 mm

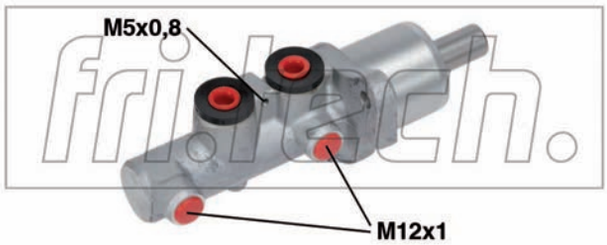

PF838

ø 22,2 mm

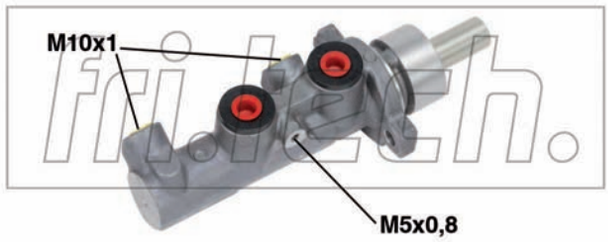

PF839

ø 22,2 mm

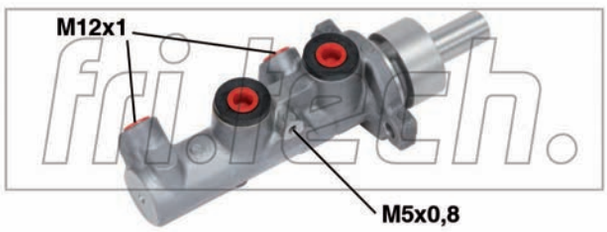

PF840

ø 22,2 mm

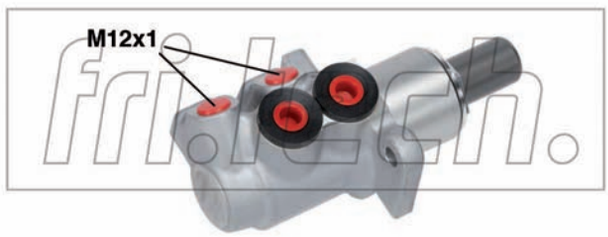

PF841

ø 22,2 mm

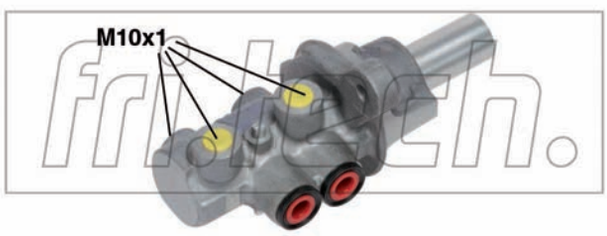

PF842

ø 22,2 mm

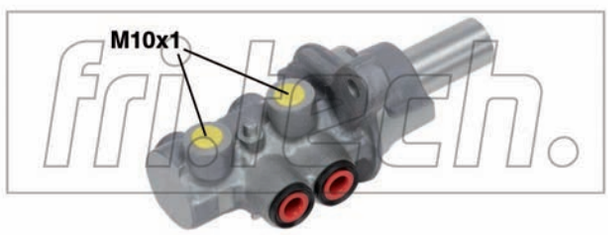

PF843

ø 23,81 mm

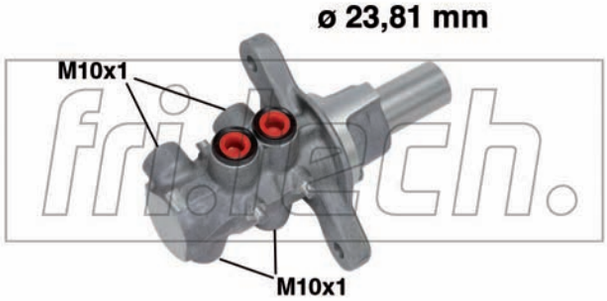

PF844

ø 23,81 mm

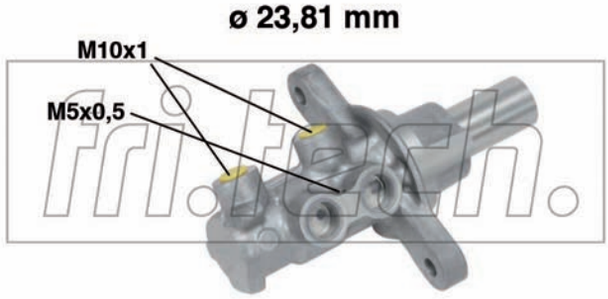

PF845

ø 20,64 mm

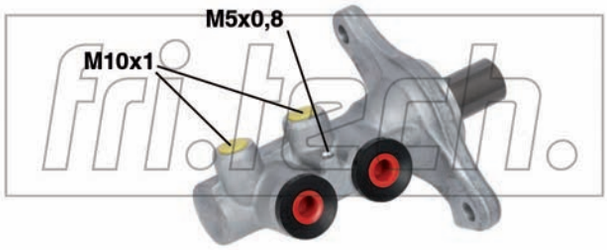

PF846

ø 23,81 mm

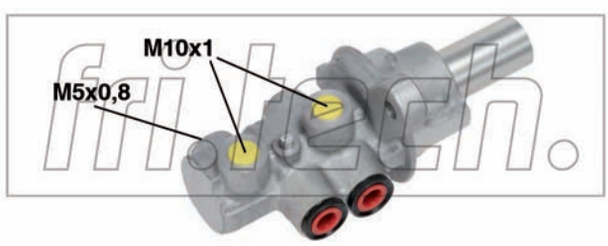

PF847

ø 22,20 mm

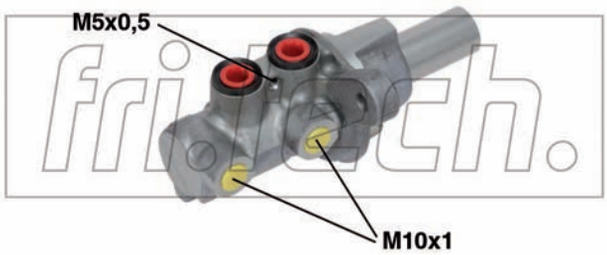

PF848

ø 22,20 mm

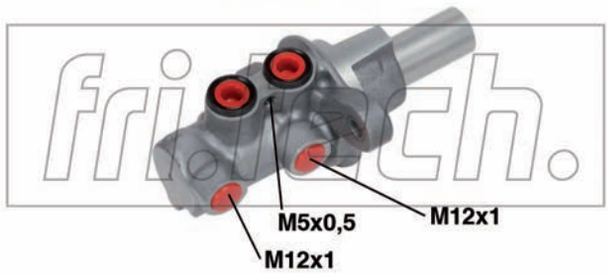

PF849

ø 23,81 mm

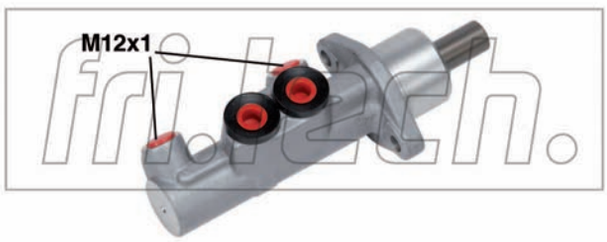

PF850

ø 22,2 mm

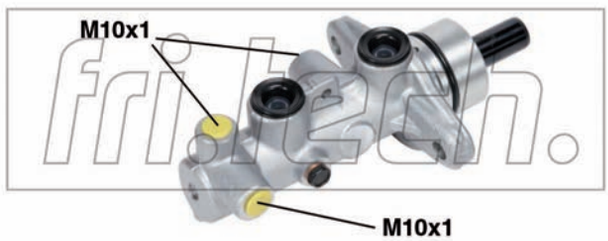

PF851

ø 20,64 mm

PF853

ø 23,81 mm

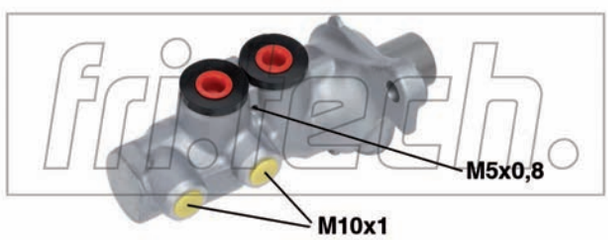

PF854

ø 23,81 mm

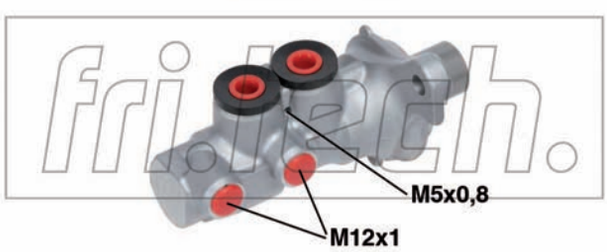

PF855

ø 20,64 mm

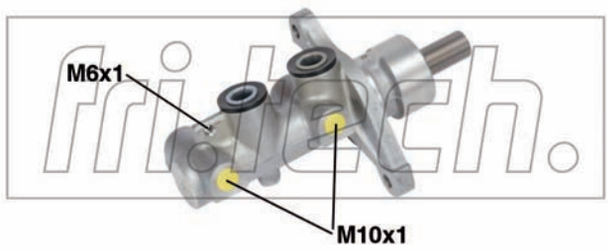

PF856

ø 23,81 mm

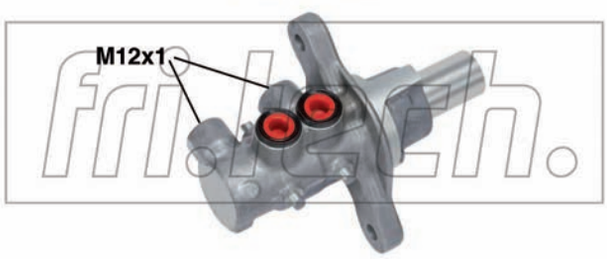

PF857

ø 23,81 mm

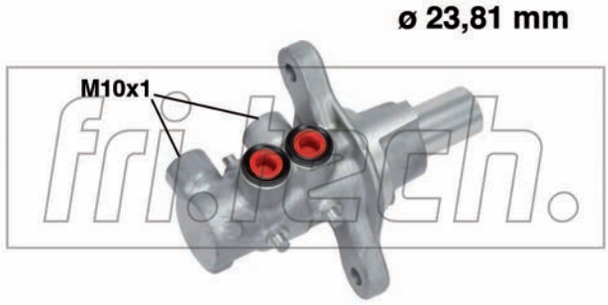

PF858

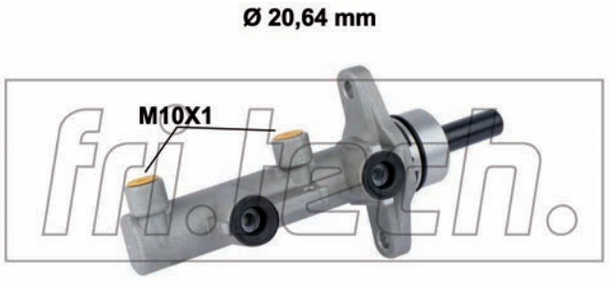

PF860

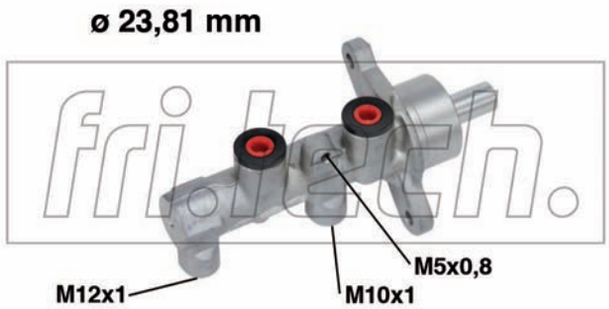

PF861

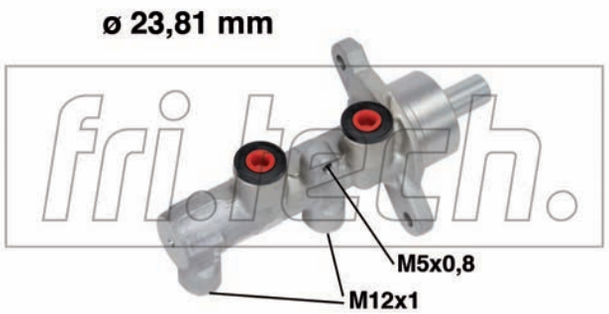

PF862

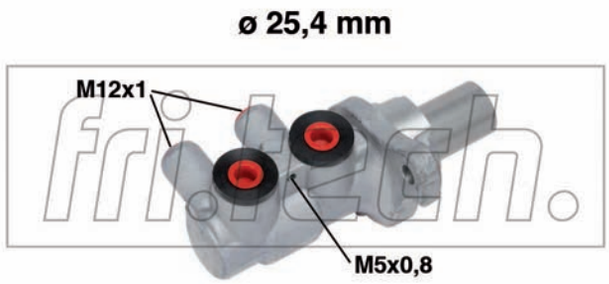

PF865

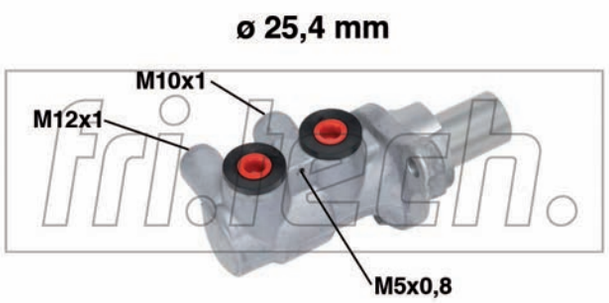

PF866

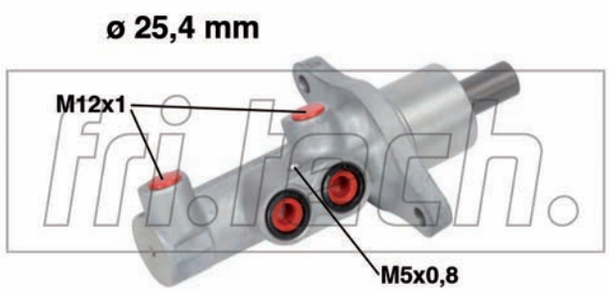

PF867

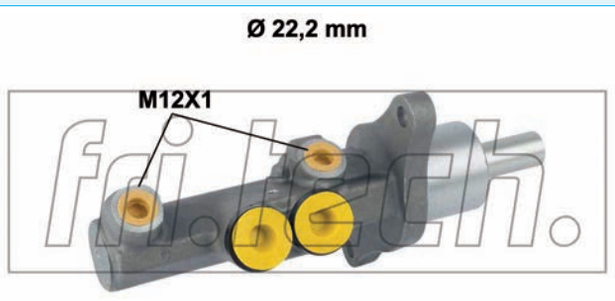

PF869

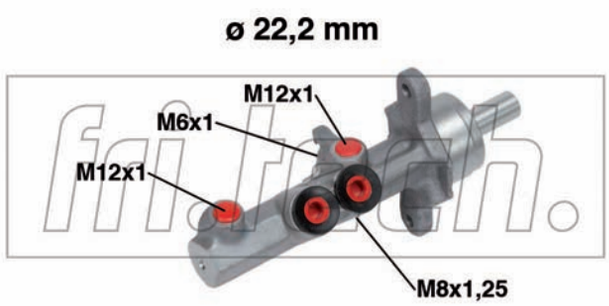

PF870

PF871

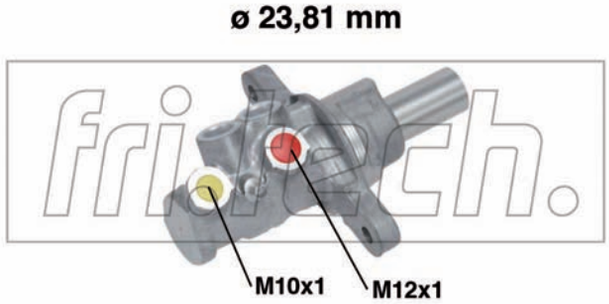

PF873

ø 25,4 mm

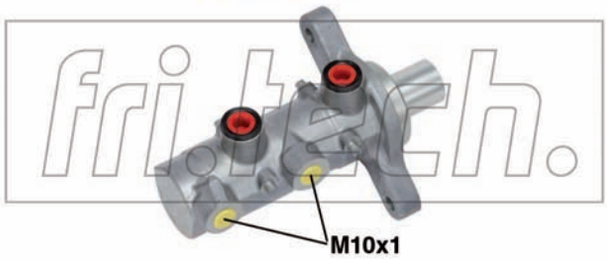

PF874

ø 25,4 mm

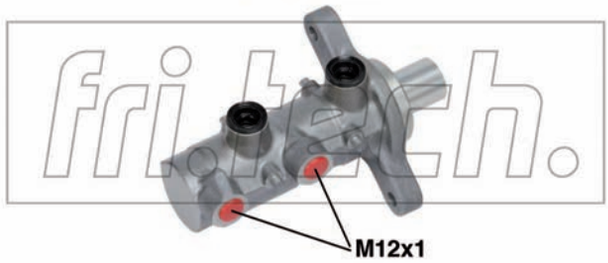

PF875

ø 26,99 mm

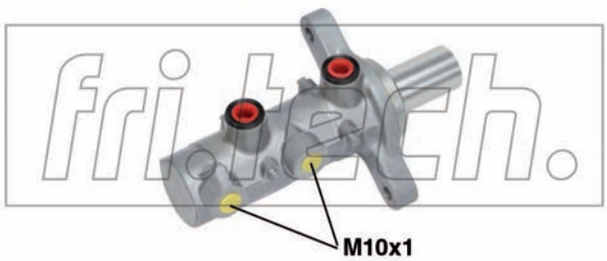

PF876

ø 25,4 mm

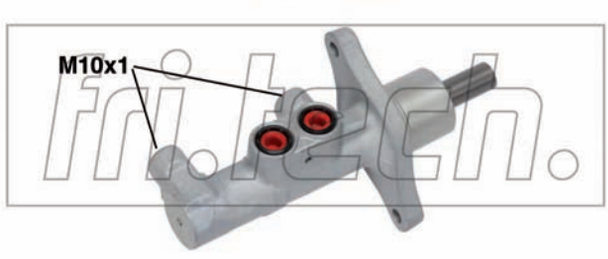

PF877

ø 25,4 mm

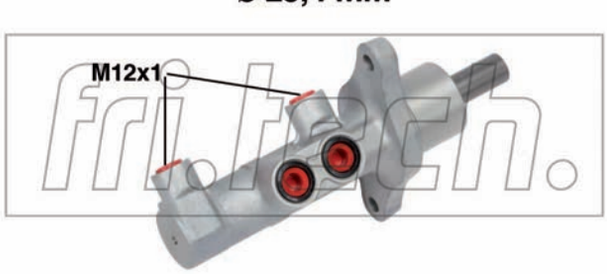

PF878

ø 26,99 mm

PF879

ø 20,64 mm

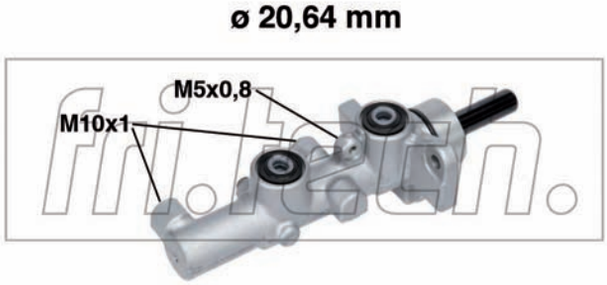

PF880

ø 23,81 mm

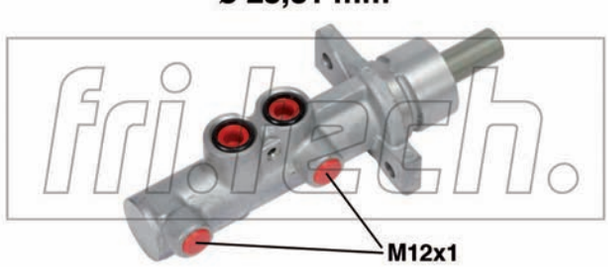

PF884

ø 22,2 mm

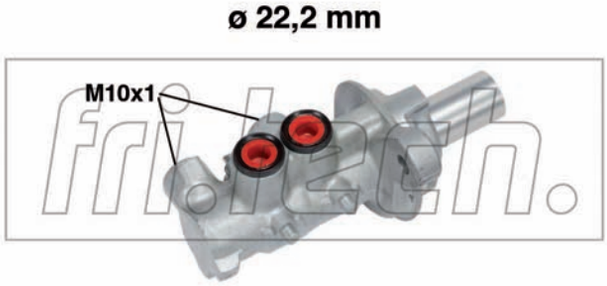

PF886

ø 20,64 mm

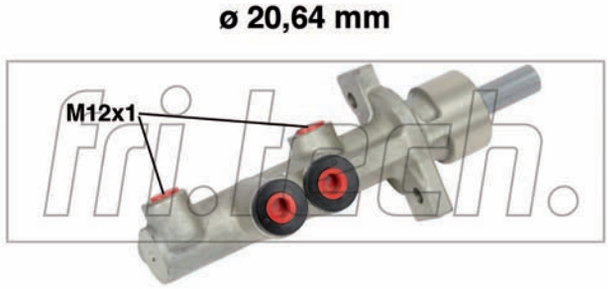

PF887

ø 25,4 - ø 22,2 mm

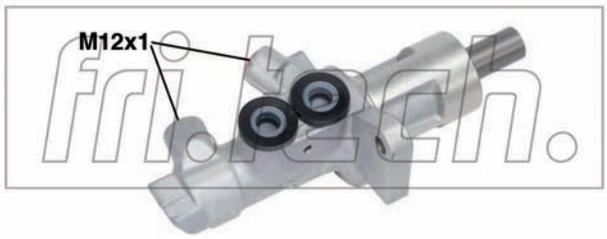

PF890

ø 23,81 mm

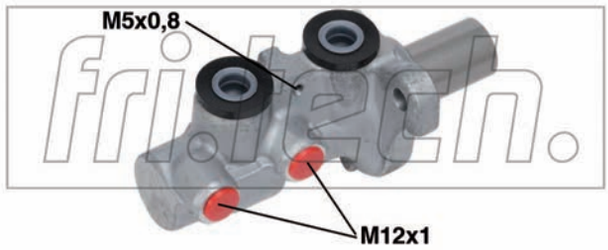

PF892

ø 23,81 mm

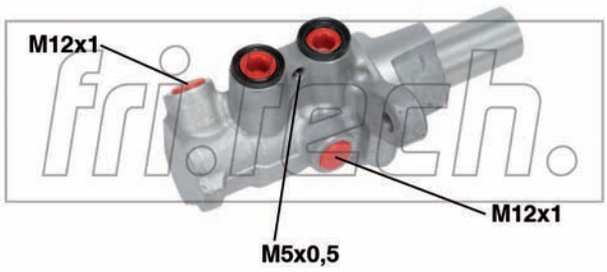

PF895

ø 23,81 mm

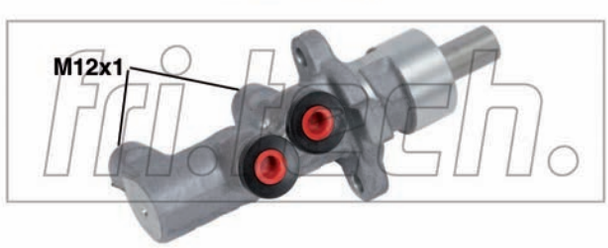

PF896

ø 25,4 mm

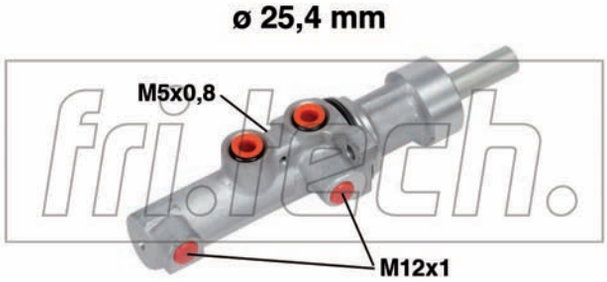

PF897

ø 25,4 mm

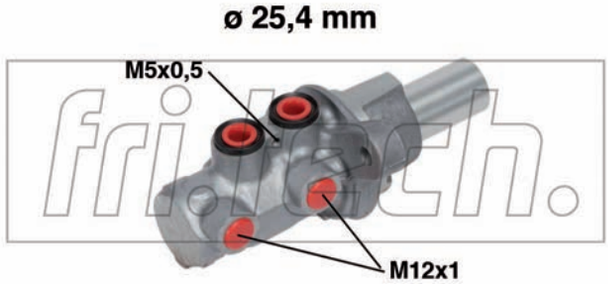

PF898

ø 22,2 mm

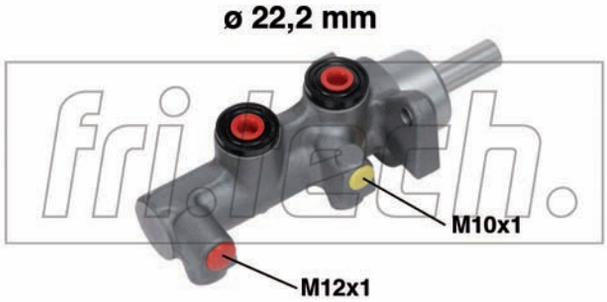

PF899

ø 22,2 mm

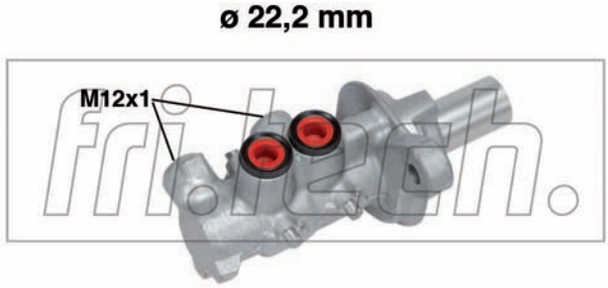

PF901

Ø 20,64 mm

PF902

Ø 22,2 mm

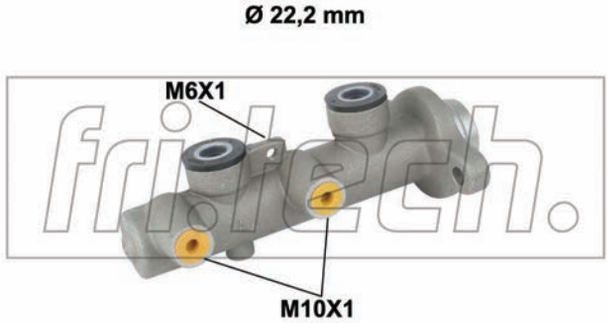

PF904

ø 22,2 mm

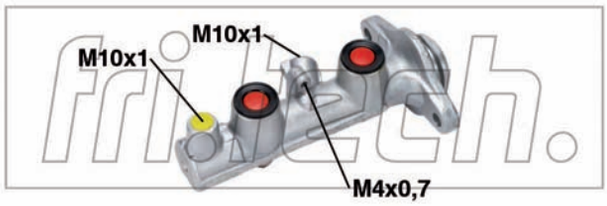

PF905

ø 22,2 / 23,81 mm

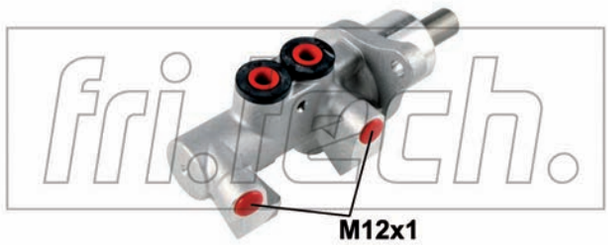

PF906

ø 25,4 mm

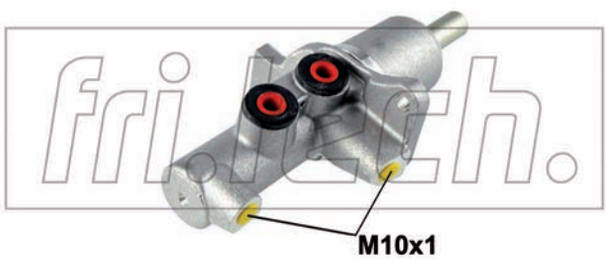

PF907

Ø 23,81 mm

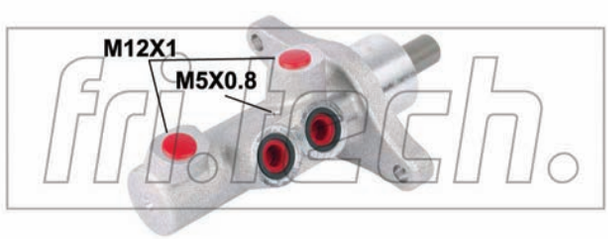

PF908

ø 23,81 mm

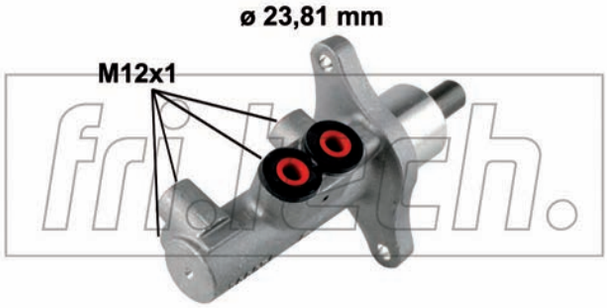

PF909

ø 23,81 mm

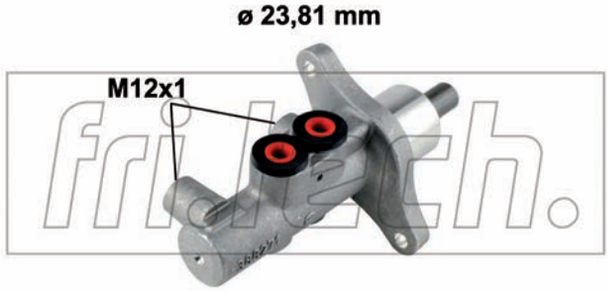

PF910

Ø 23,81 mm

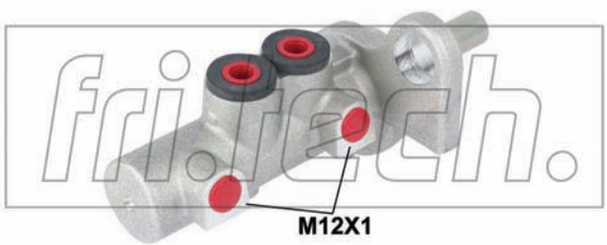

PF911

Ø 23,81 mm

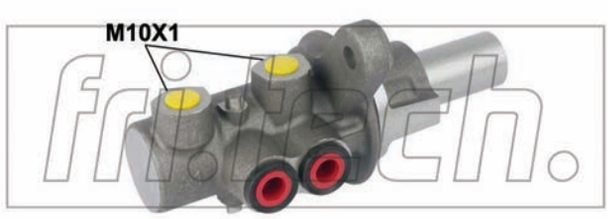

PF912

Ø 23,81 mm

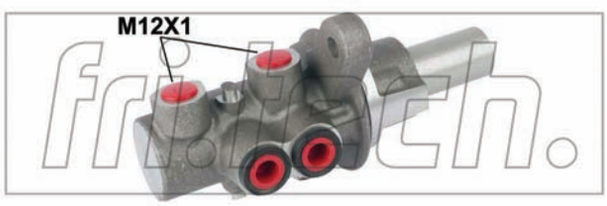

PF913

Ø 23,81 mm

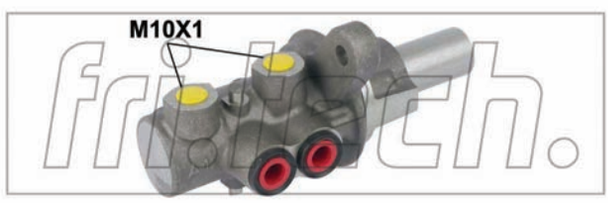

PF914

PF915

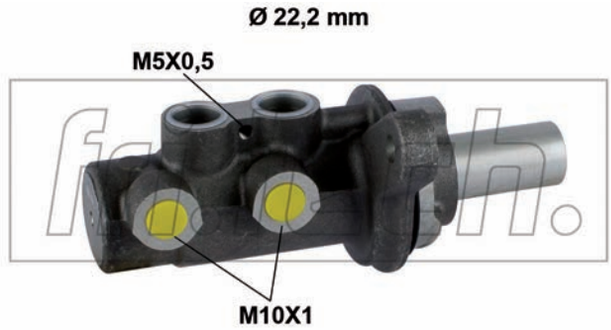

PF916

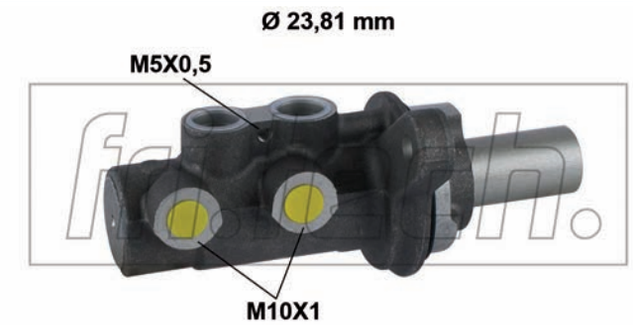

PF917

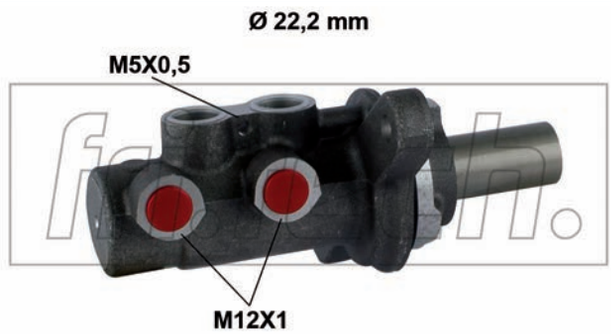

PF918

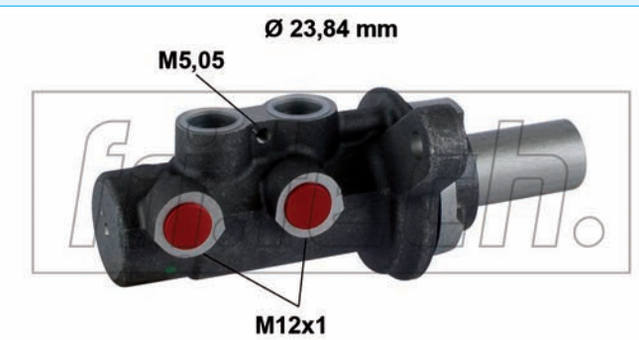

PF919

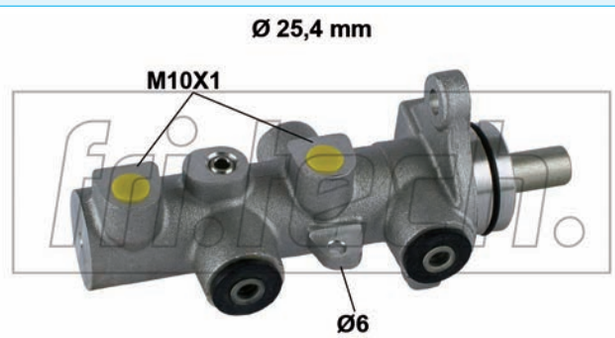

PF920

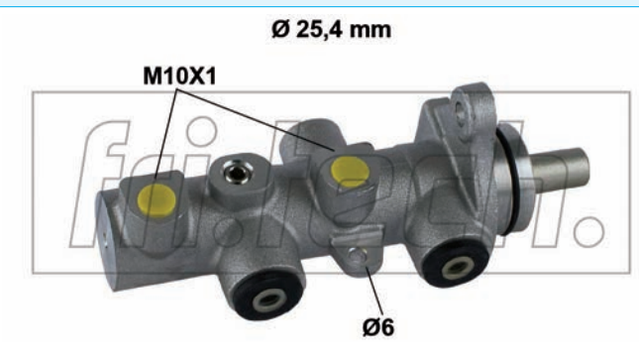

PF921

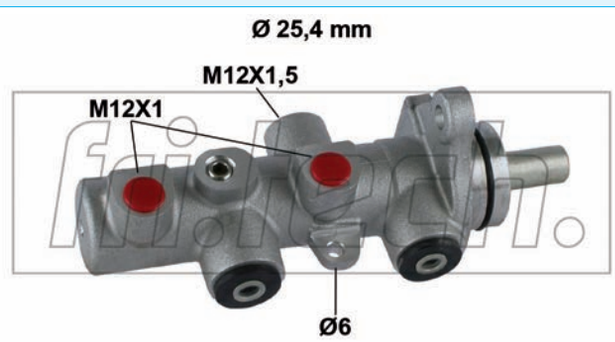

PF922

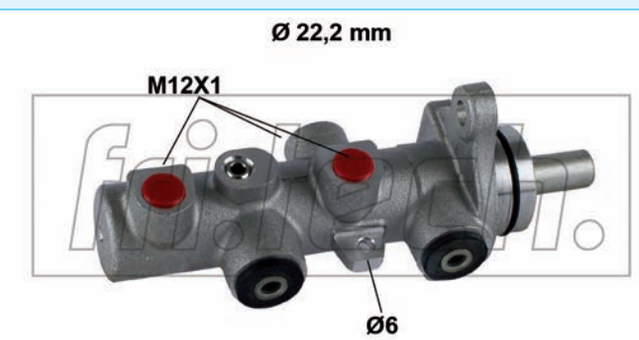

PF923

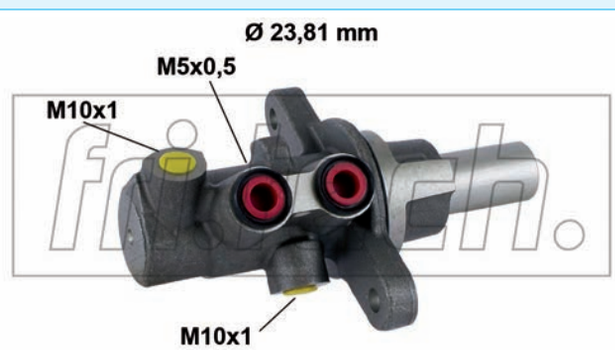

PF924

PF925

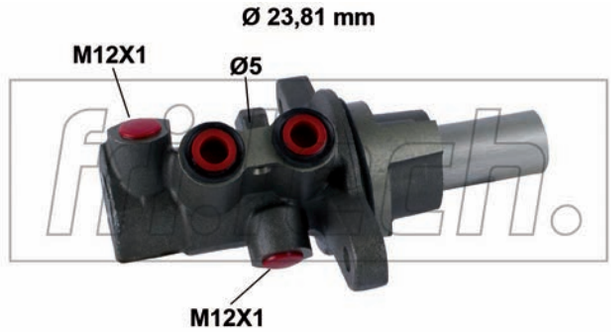

PF926

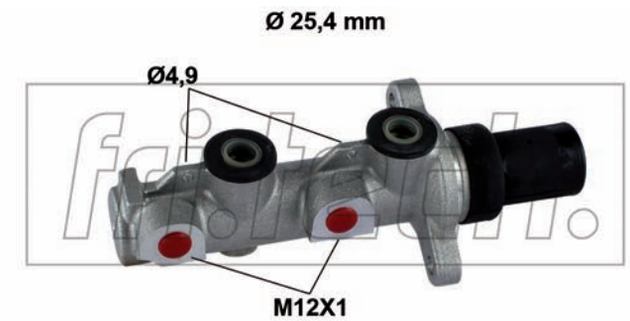

PF927

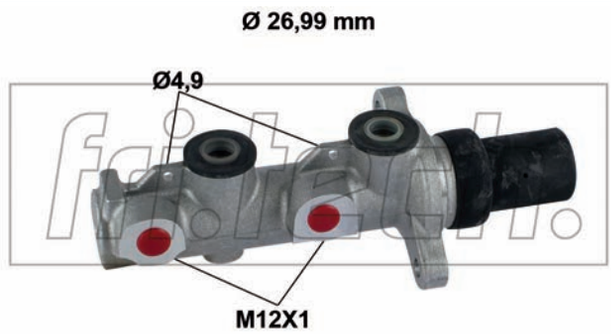

PF928

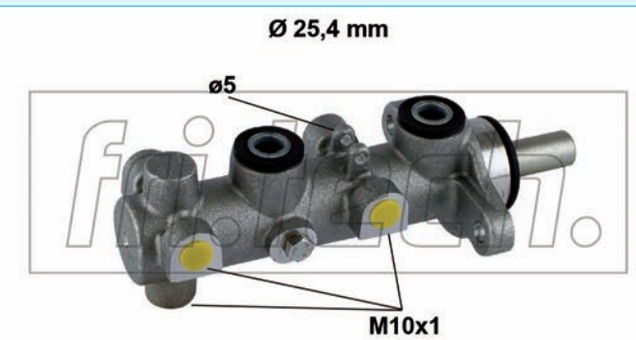

PF931

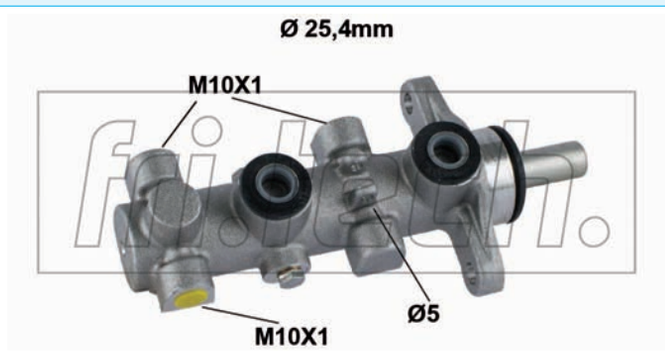

PF932

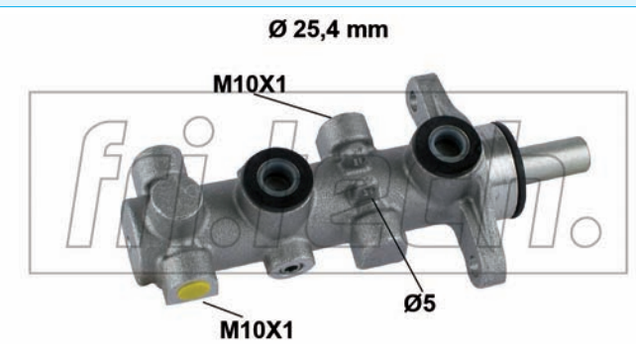

PF933

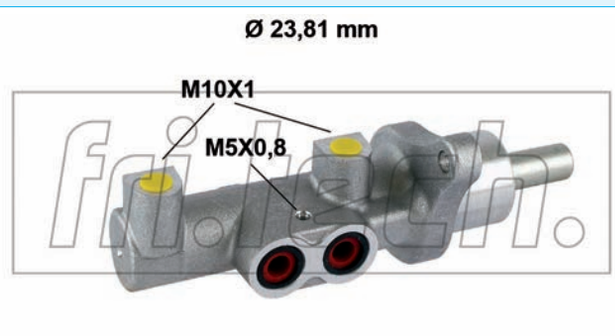

PF934

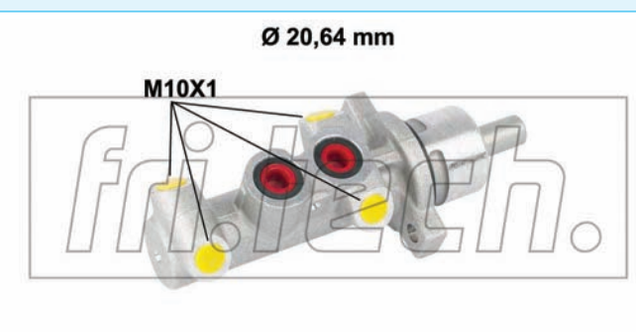

PF935

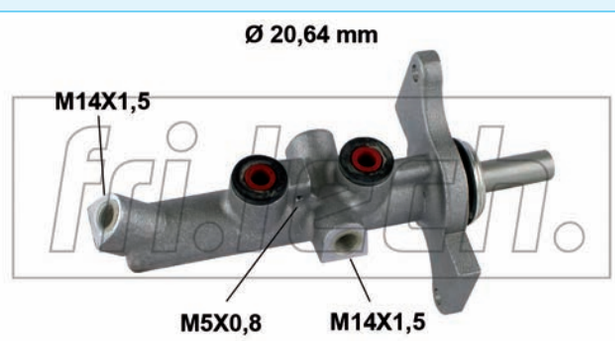

PF936

Ø 22,2 mm

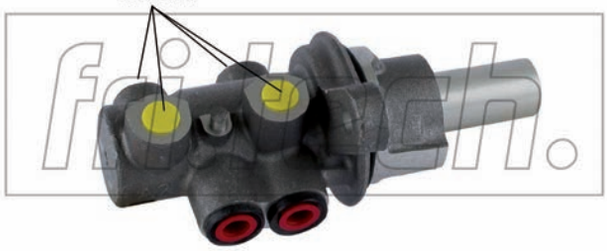

PF937

Ø 22,2 mm

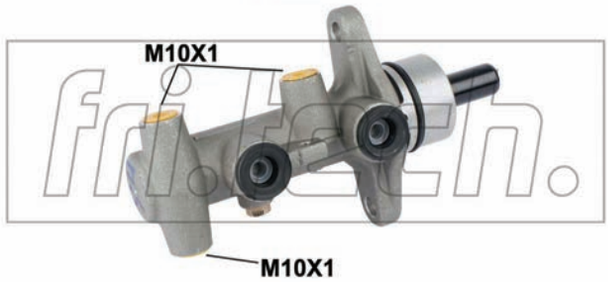

PF938

Ø 26,99 mm

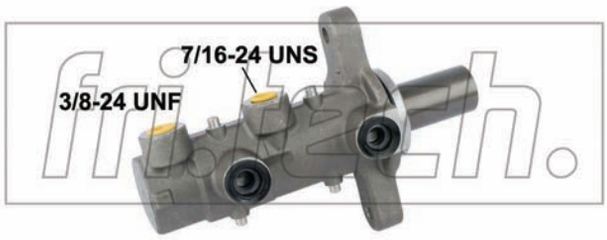

PF939

Ø 20,64 mm

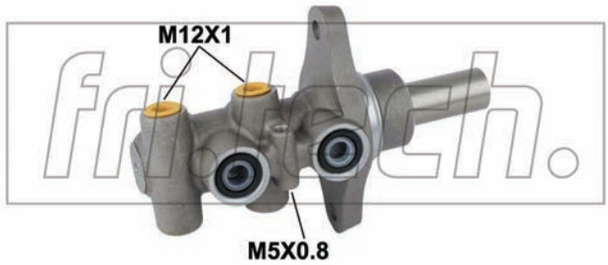

PF940

Ø 25,4 mm

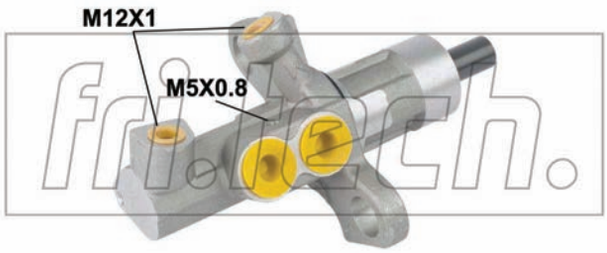

PF941

Ø 23,81 mm

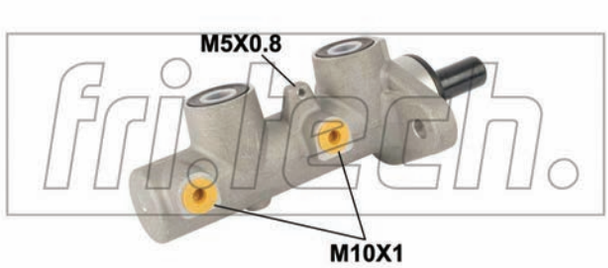

PF942

Ø 19,05 mm

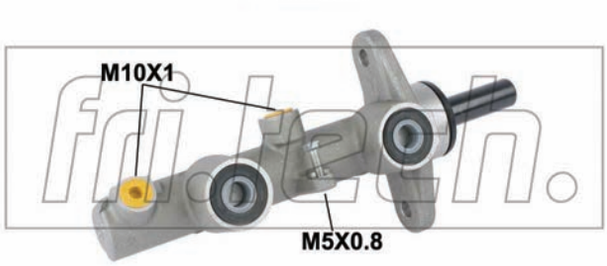

PF943

Ø 20,64 mm

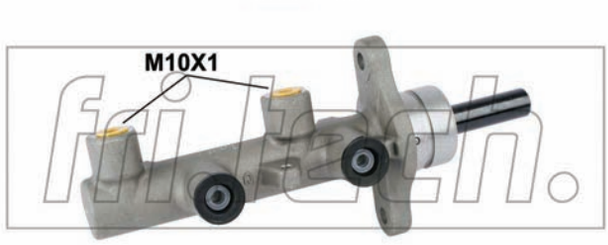

PF944

Ø 22,2 mm

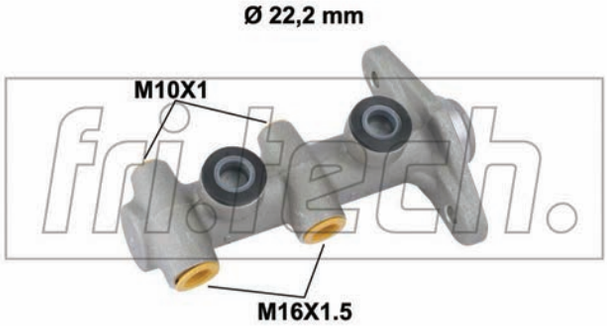

PF945

Ø 22,2 mm

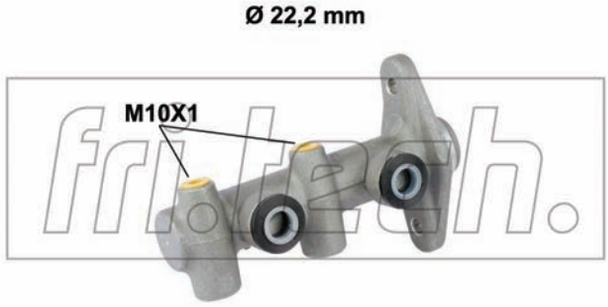

PF946

Ø 25,4 mm

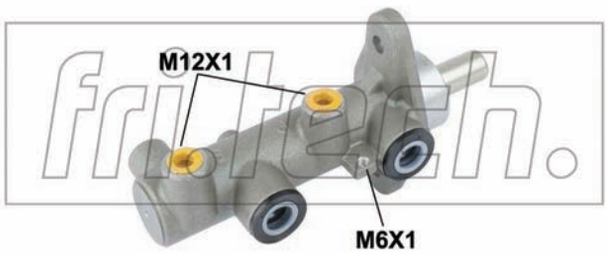

PF947

Ø 25,4 mm

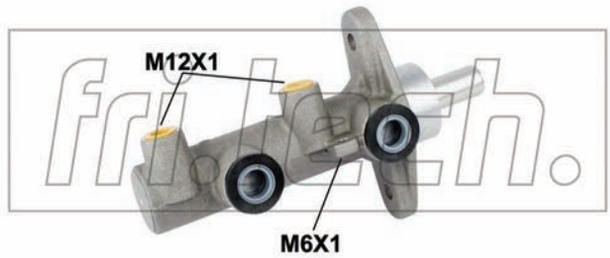

PF948

Ø 22,2 mm

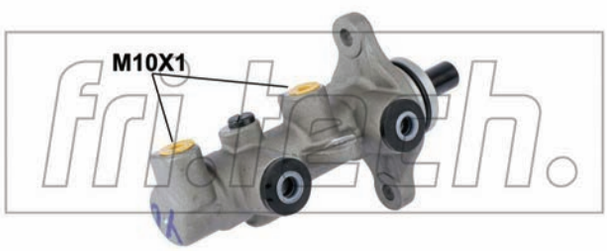

PF949

Ø 26,99 mm

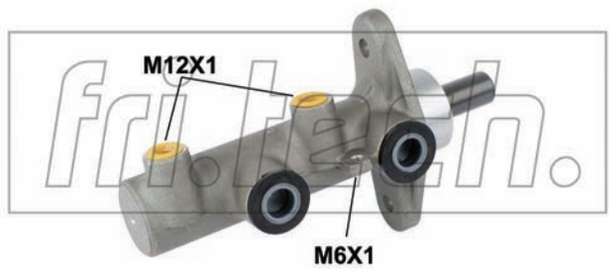

PF950

Ø 25,4 mm

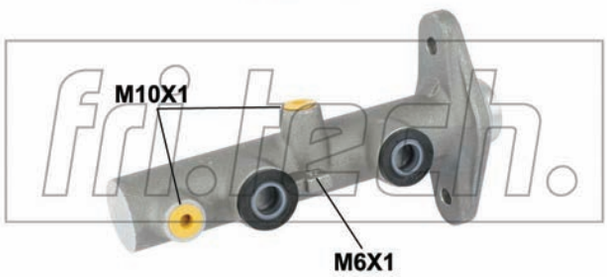

PF951

Ø 22,2 mm

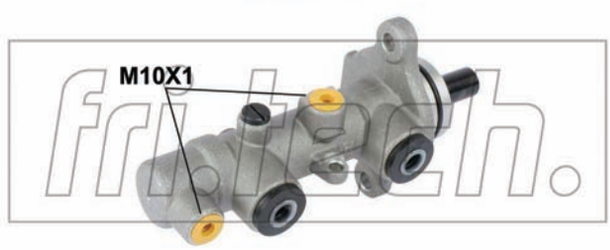

PF952

Ø 22,2 mm

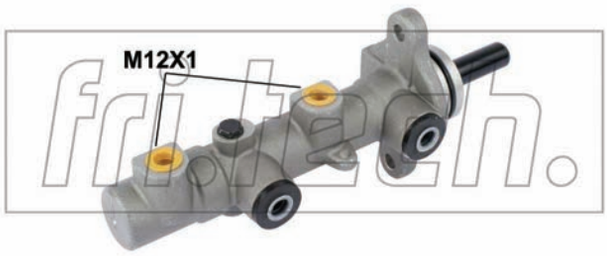

PF953

Ø 25,4 mm

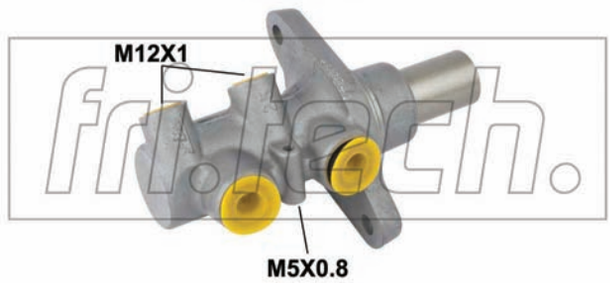

PF954

Ø 20,64 mm

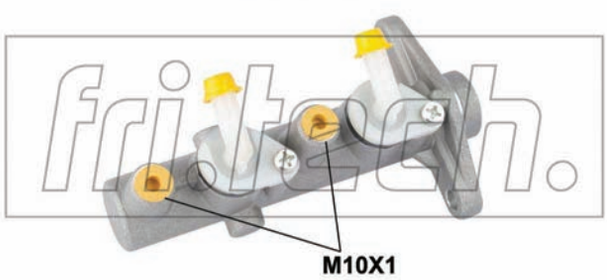

PF955

Ø 25,4 mm

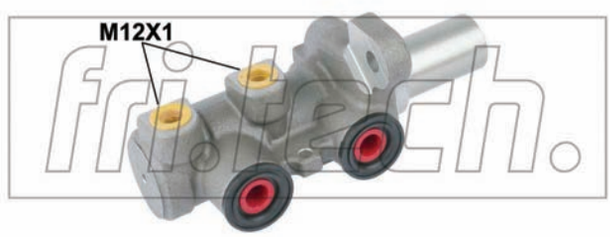

PF956

Ø 20,64 mm

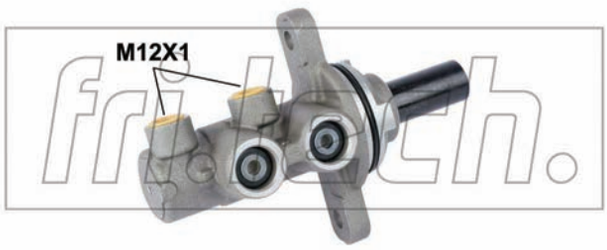

PF957

Ø 22, 2 mm

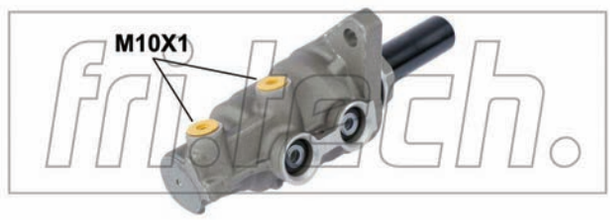

PF958

ø22,2 mm

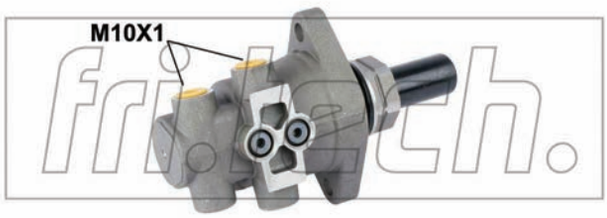

PF959

Ø 26,99 mm

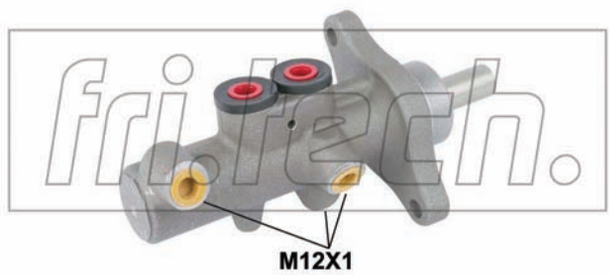

PF960

Ø 22,2 mm

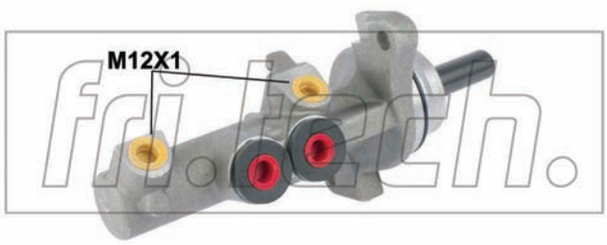

PF961

Ø 22,2

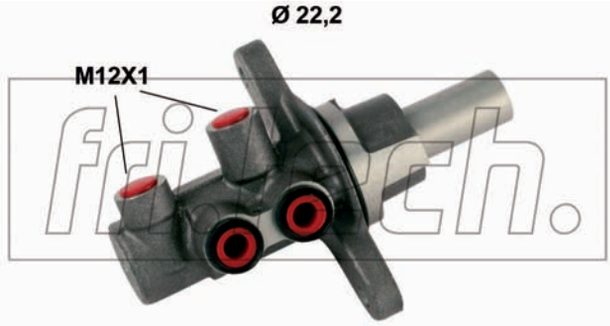

PF969

Ø 23,81

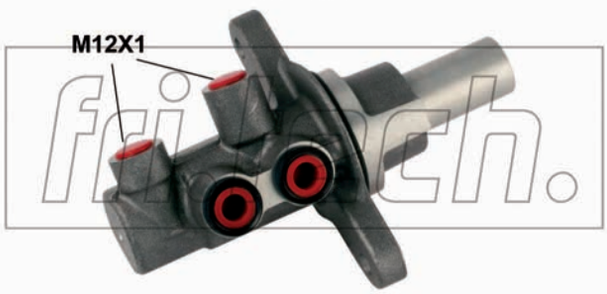

PF970

Ø 23,81 mm

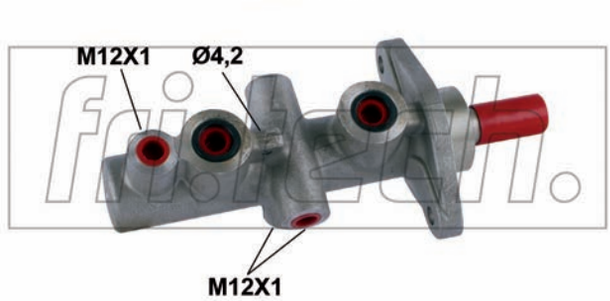

PF974

Ø 26,99 / 20,64 mm

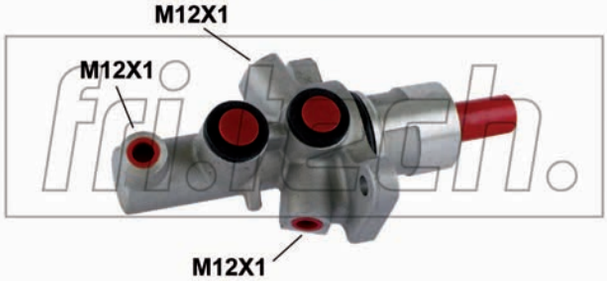

PF976

Ø 20,64

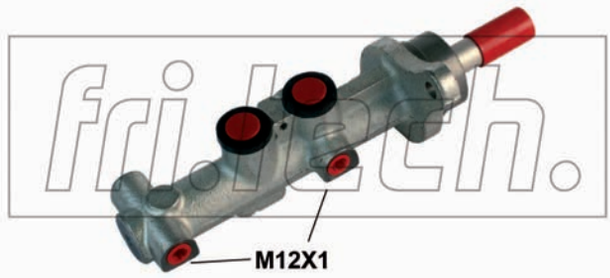

PF978

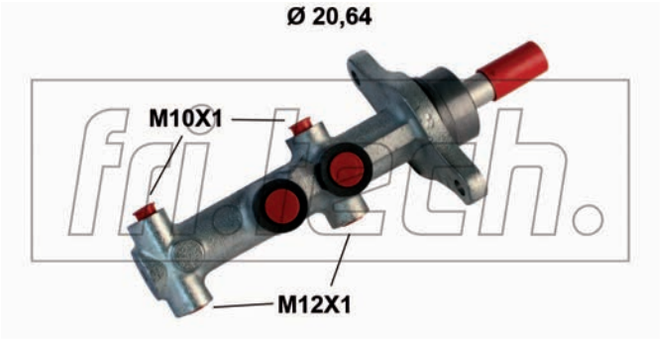

PF979

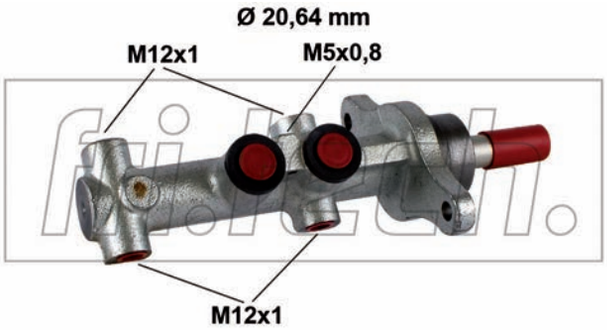

PF980

PF981

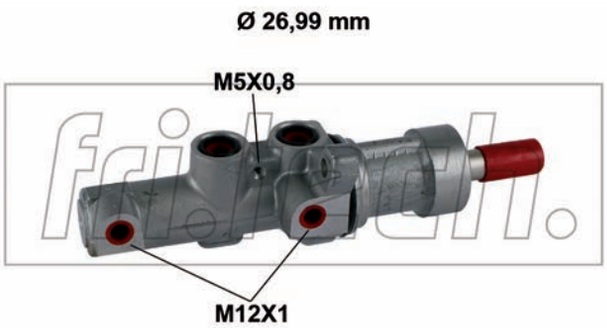

PF982

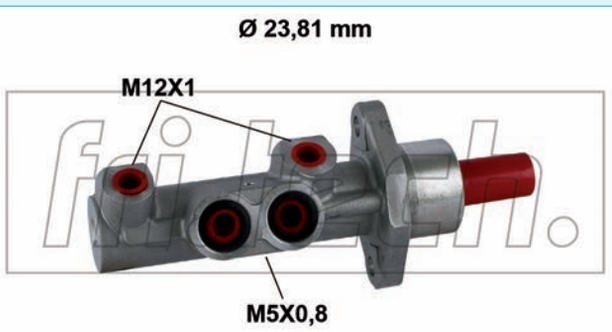

PF983

PF984

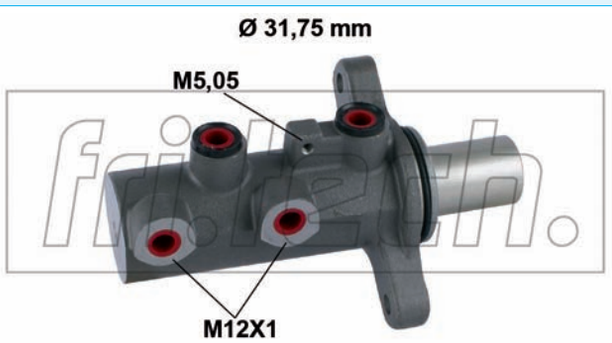

PF985

PF986

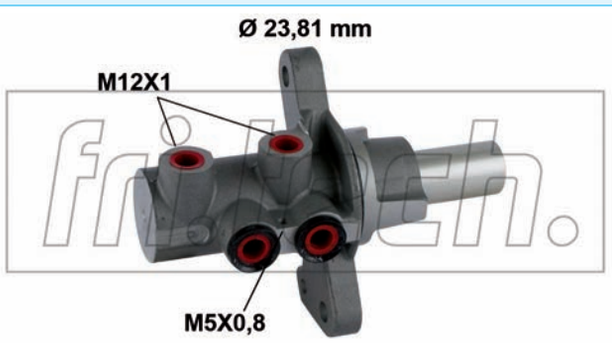

PF987