This is the Engine Parts (UK) LTD Valve train catalogue.

The catalogue has not been updated since 2014, for some later
engines, you may not find what you are looking for. If this is the case, we refer you to the use of the Freccia catalogue where new parts have been added to our range.

CONTENTS LIST

PAGES

2-5	ALFA ROMEO
6-7	ALFA ROMEO DIESEL
8-13	AUDI
14-17	AUDI DIESEL
18-19	BEDFORD
20-23	B.M.W.
24-25	B.M.W. DIESEL
26-27	CHRYSLER
28-29	CHRYSLER DIESEL
30-35	CITRÓEN
36-39	CITRÓEN DIESEL
40-41	CUMMINS
42.43	DAEWOO/DAEWOO DIESEL
44-45	DAIHATSU
46-51	FIAT
52-57	FIAT DIESEL
58-59	FIAT-IVECO
60-67	FORD
68-71	FORD DIESEL
72-75	HONDA/HONDA DIESEL
76-79	HYUNDAI
80-81	HYUNDAI DIESEL
82-83	ISUZU/ISUZU DIESEL
84-85	JAGUAR
86-87	JEEP/JEEP DIESEL
88-91	KIA/KIA DIESEL
90-91	LADA
92-95	LANCIA
96-99	LANCIA DIESEL
100-101	LEYLAND/DAF
>>>>	LEXUS - SEE TOYOTA
102-107	MAZDA
108-109	MAZDA DIESEL
110-115	MERCEDES
116-119	MERCEDES DIESEL
120-123	MITSUBISHI
124-125	MITSUBISHI DIESEL
126-129	NISSAN
130-133	NISSAN DIESEL
134-139	OPEL/VAUXHALL
140-143	OPEL/VAUXHALL DIESEL
144-145	PERKINS
146-151	PEUGEOT
152-155	PEUGEOT DIESEL
156-157	PORSCHE
158-161	RENAULT
162-165	RENAULT DIESEL
166-171	ROVER (inc. BLMC)
172-173	ROVER DIESEL (inc. BLMC)
174-175	SAAB
176-177	SAAB DIESEL
178-179	SCANIA
180-183	SEAT
184-187	SEAT DIESEL
188-191	SKODA
192-193	SKODA DIESEL
194-195	SMART/SMART DIESEL
196-197	SSANGYONG &DIESEL
198-199	SUBARU
200-201	SUZUKI
202-203	SUZUKI DIESEL
204-209	TOYOTA
210-213	TOYOTA DIESEL
214-221	VOLKSWAGEN
222-227	VOLKSWAGEN DIESEL
228-229	VOLVO
230-231	VOLVO DIESEL
232-241	VALVE SHIM LISTINGS
242-245	PRE-COMBUSTION CHAMBERS
246-254	CROSS REFERENCES
255-275	NUMERICAL LISTINGS
276-277	TECHNICAL INFORMATION

MODEL	YEAR	CC	No. Cyls	IN/ EX	VALVE PART NUMBER	DIMENSIONS	MAT.	SA CG
ALFA ROMEO								
33 145-146 Engs. 30736/737/743/750/751/753/755/33201/501	1990-94 1994/96	1351 1490 1596 1712	4 4 4 4	In Ex				
Mito 1.4ie 16v Eng. 198A4.000	2008	1368	4	In Ex	FTVI720001 FTVX720001	26.8 x 6 x 95.2 22.5 x 6 x 94.7	C C	45-3 45-3
Mito 1.4ie Turbo 16v Eng 198A8.000	2008	1368	4	In Ex	FTVI720001 FTVX720002	26.8 x 6 x 95.2 22.4 x 6 x 94.7	C C	45-1 45-1
Giulia Super Spider/Sprint/GT Engs. 00526, 00530	1970-77 1962-77	1290 1556	4	In Ex				
Alfasud Alfasud Sprint Engs. 30102/104/124/128/146/168/180/184/508/550/588	1971-89	1186 1351 1490 1712	4 4 4 4	In Ex				
Alfa 75 Alfa 164 20i Twin Spark 155 1.7 155 1.8 155 2.0 164 2.0	1987 1994 1992 1993	1962 1749 1773 1995	4 4 4 4	In Ex	ARVI840000 ARVX840000	44 x 8 x 116 38 x 8 x 119.5	P P	45-3 45-3
New 75 2.0 16v 155 2.0 Quadrifoglio	1991	1995	4	In Ex	FTVI840000 FTVX840000	34.5 x 7 x 128 28.5 x 7 x 125.6	P P	45-1 45-1
Alfa164, 166 Eng. 641.01 Eng. 641.02	1991-92 1992-96	1996	V6	In Ex				
145 1.4 16v TS 146 1.4 16v TS 147 1.6 16v TS Eng. AR37203	1999 2001	1370 1598	4 4	In Ex	FTVI820003 FTVX820003	30 x 7 x 113.1 26.1 x 7 x 108.5	P P	45-3 45-3
33 1.7 ie 16v Eng. 307.46 145/146 1.7 16V 95kw	1989 1995	1712	4	In Ex	ARVI870000 ARVX870000	32 x 7 x 99.1 26 x 7 x 101.2	P P	45-3 45-3

OE PART NUMBER	VALVE GUIDE PART NUMBER	GUIDE TYPE	MAT.	DIMENSIONS	OE PART NUMBER
	G3317 G3317	F F	G G	8.02 x 13.08 x 40.5 8.02 x 13.08 x 40.5	60750222 60750222
55185028 55185080	G11069 G11069	F F	S06 S06	6.02 x 10.03 x 39.7 6.02 x 10.03 x 39.7	46441525 73500256 46441525 73500256
55185028 55206233	G11069 G11069	F F	S06 S06	6.02 x 10.03 x 39.7 6.02 x 10.03 x 39.7	46441525 73500256 46441525 73500256
	G2014 G2018	F-1 F-1	B B	9.00 x 14.04 x 51 9.00 x 14.04 x 54	105000150304 101100150302
	G2022 G2026	F A	G G	8.02 x 13.08 x 40.5 8.02 x 13.08 x 44	700001 700002
195.36.03.300.00 60513310 60564098 195.10.03.301.05 60512751	G3110 G3114	F F	B G1	8 x 15.07 x 48 8 x 15.07 x 45	60701202 60579200
60805834 7574739 60805836 7574742 7598073/7611673	G3205 G3206 G3205 G3206	F F	G1 G1	7.02 x 14.05 x 51.3 14.10 7.02 x 14.05 x 51.3 14.10	7616998 7616998
	G11009 G11011	F F	B1 G1	9.00 x 14.05 x 48.5 9.00 x 14.06 x 42	60810438 60810435
60812982 7735898 60812981 7735899	G3531 G11007 G3532 G11008	F F	G1 G1	7.02 x 13.03 x 42.5 13.08 7.02 x 13.03 x 46 13.08	6081186 6081187 6081189 6081190
A133.798 60525336 A133.799 60525337	G3130 G3134	F F	B1 B1	7 x 12.07 x 40.5 7 x 12.07 x 40.5	60562594 60562595

MODEL	YEAR	CC	No. Cyls	IN/ EX	VALVE PART NUMBER	DIMENSIONS	MAT.	SA CG
145 1.6/2.0 16v 146 1.6/1.8 16v 1471.6/2.0 16v 1561.6/1.8/2.016v 166 2.0 16v Spider Twin Spark Engs.	1999 2001	1598 1747 1970	4 4 4	In Ex	FTVI820002 FTVX820002	33.6 x 7 x 113 27.9 x 7 x108.5	P P	45-3 45-3
159 Brera Spider 3.2 JTS 24v Eng. 939A000	2005 2006	3195	V6	In Ex	ARVI856000 ARVX856000	35 x 6 x 101.4 30.6 x 6 x 97.2		45-1 45-1
159 1.9 JTS 159 2.2 JTS Brera 2.2 JTS Spider 2.2 JTS Engs. 939A6.000 939A5.000	2005 2006	1858 2198	4	In Ex	ARVI860000 ARVX860000	35 x 6 x 102.2 30 x 6 x 100.1		45-3 45-3
Alfa 6/GTV6 Alfa 90/GTV6 Alfa 75 Alfa 6 155 2.5V6 164	1979/84 1984 1985 1984 1992	2492	V6	In Ex	ARVI880000 ARVX880000	41 x 9 x 107.3 36.5 x 9 x 94.8	C P	45-1 45-1
Alfa 6, 75, 90 Alfa 164 GTV Engs. 643.05 119.11	1987-92 1987-98	2959	V6	In In Ex				
156 2.5V6 24v 166 2.5V6 24v	1999	2492	V6	In Ex	ARVI930000 ARVX930000	33.6 x 7 x 102 29.1 x 7 x 102.1	C P	45-3 45-3
164 3.0 V6 24v 164 3.0 QD GTV 3.0 TB 24v	1993 1999	2959	V6	In Ex	ARVI930001 ARVX930001	35.6 x 7 x 102 31.1 x 7 x 102.2	C P	45-3 45-3

OE PART NUMBER	VALVE GUIDE PART NUMBER	GUIDE TYPE	MAT.	DIMENSIONS	OE PART NUMBER
60811153 7766564 60674496 60811154	G3531 G11007 G3532 G11008	F F	G1 G1	7.02 x 13.03 x 42.5 13.08 7.02 x 13.03 x 46 13.08	6081186 6081187 6081189 6081190
71741112 71741113					
55192156 71739686	G11379 G11379	A-1 A-1	G G	6 x 10.04 x 36 6 x 10.04 x 36	71739350 71739350
119.13.03.300.00 119.28.03.300.01 60523548 119.00.03301.15 119.28.03.301.01 60523550/60605745	G3098 G3102	F F	G1 G1	9.00 x 14.07 x 49 9.00 x 14.07 x 42.5	119.28.01.503.00 60737369
	G3098 (75, 164) G11009 (6, 90, GTV) G3102	F F F	B B1 G1	9.00 x 14.07 x 49 9.00 x 14.05 x 48.5 9.00 x 14.07 x 42.5	605005940 60810438 60737369
60582738 60582739	G11016 G11005	F F	G1 G1	7 x 12.06 x 38 7 x 12.07 x 43	60612839 60612835
60560643 60560644	G11003 G11005	F F	B1 G1	7.01 x 12.06 x 38 7.01 x 12.07 x 43	60572415 60612835

MODEL	YEAR	CC	No. Cyls	IN/ EX	VALVE PART NUMBER	DIMENSIONS	MAT.	SA CG
ALFA ROMEO DIESEL								
Mito 1.3 JTDM Euro 5	2008	1248	4	In	FTVI730001	22.45 x 6 x 109.2		45-3
				Ex	FTVX730001	22.5 x 6 x 109.2		45-3
Mito 1.6 JTDM 16v Eng. 198A.2.000	2008	1598	4	In	ARVI720002	26.6 x 5 x 114.4	P	45-3
				Ex	ARVX820001	24.5 x 5 x 114.4	P	45-3
147/156 1.9JTD 147/156 2.4JTD Eng. 192A5	2002	1910 2387	4 5	In	ARVI820000	27.8 x 6 x 114.4	P	45-3
				Ex	ARVX820000	25.8 x 6 x 114.4	p	45-3
159 1.9 JTDM Engs. 939A2.000 159 2.0 JTDM Eng. 939B3.000	7/2006 2009	1910 1956	4	In	ARVI820001	28 x 5 x 114.4 Ret to S/E 4.9mm		45-3
				Ex	ARVX820001	24.5 x 5 x 114.4 Ret to S/E 5.9mm		45-3
159 2.4JTDM 166 2.4 JTDM Brera 2.4 JTDM Spider 2.4 JTDM Eng. 939A9.000 From engine no. 5553218	07/2006-	2387	5	In	ARVI820001	28 x 5 x 114.4 Ret to S/E 4.9mm		45-3
				Ex	ARVX820001	24.5 x 5 x 114.4 Ret to S/E 5.9mm		45-3
159 2.4JTDM 166 2.4 JTDM Brera 2.4 JTDM Spider 2.4 JTDM Eng. 939A9.000 939A3.000 936B000 To engine no. 5553217	2005- 2006 2006 2007	2387	5	In	ARVI820002	28 x 5 x 114.4 Ret to S/E 5.8mm		45-3
				Ex	ARVX820002	24.5 x 5 x 114.4 Ret to S/E 6.5mm		45-3
145/146 1.9JTD 147/156 1.9JTD 156/166 2.4JTD	1998 2001 1997	1910 1910 2387	4 4 5	In	FTVI820004	35.5 x 8 x 115	P	45-3
				Ex	FTVX820004	34.5 x 8 x 115	P	45-3
145/146 2.0TD 155 1.9TD 155 2.0TD	1994/99 1993/97	1929		In	FTVI826000	37.4 x 8 x 116.6	P	45-1
				Ex	FTVX826000	33.5 x 8 x 116.6	P	45-1
Alfa33 TD Giulietta 2.0TD Alfetta 2.0TD Alfa 75-90 2.0TD Alfetta 2.4TD Alfa 75-90 2.4TD 6 2.5 TD 155 2.5TD 164 2.5TD Giordinetta	1986/87 1983 1981 1985/88 1984 1983 1992	1779 1995 2393 2492 239	4 4 4 4 5	In	VMVI920000	40.1 x 8 x 121	P	35-1
				Ex	VMVX920000	33.9 x 8 x 121	P	45-1

OE PART NUMBER	VALVE GUIDE PART NUMBER	GUIDE TYPE	MAT.	DIMENSIONS	OE PART NUMBER
55204574 55223836	G11310 G11310	P P	G G	6.02 x 10.03 x 43 6.02 x 10.03 x 43	46816601 46816601
55205125 55207955	G11481 G11481	F-1 F-1	G G	5 x 10.03 x 46.7 5 x 10.03 x 46.7	55210016 55210016
46802049 46787902	G11302 G11302	F F	G G	6.02 x 11.03 x 47 6.02 x 11.03 x 47	55186786 55186786
55206431 55205183 55207955	G11481 G11481	F-1 F-1	G G	5 x 10.03 x 46.7 5 x 10.03 x 46.7	55210016 55210016
55206431 55205183 55207955	G11481 G11481	F-1 F-1	G G	5 x 10.03 x 46.7 5 x 10.03 x 46.7	55210016 55210016
55190248 55190249	G11481 G11481	F-1 F-1	G G	5 x 10.03 x 46.7 5 x 10.03 x 46.7	55210016 55210016
46478834 60814605/46750859 46416321 60814604	G11000 G11000	F F	G1 G1	8.02 x 14.03 x 43 8.02 x 14.03 x 43	60813598 60813598
60808694 60808695	G11000 G11000	F F	G1 G1	8.02 x 14.03 x 43 8.02 x 14.03 x 43	60813598 60813598
203.60.26 116.76.03.300.01 60507189 203.70.18 203.70.25A 116.76.03.301.01 195.58.03.301.00 60540864 60732850	G3126 G3126	A A	G G	8.01 x 14.07 x 55 8.01 x 14.07 x 55	60507152 60507152

MODEL	YEAR	CC	No. Cyls	IN/ EX	VALVE PART NUMBER	DIMENSIONS	MAT.	SA CG
AUDI								
A1 1.2TFS A3 1.2TFS Engs. CBZA/ZB	2011	1197	4	In Ex	ADVI710000 ADVX710000	35.5 x 6 x 98.7 30 x 6 x 98.3	C P	45-3 45-3
A2 1.4 Eng. AUA	2001	1390	4	In Ex	ADVI765000 ADVX765000	29.5 x 6 x 100.9 26 x 6 x 100.6	C P	45-3 45-3
A2 1.6 FSi 16v A3 1.6 FSi 16v Engs. BAD, BAG, BLF, BLP	2002	1598	4	In Ex	ADVI765000 ADVX765000	29.5 x 6 x 100.9 26 x 6 x 100.6	C P	45-3 45-3
80CC/CD 80 Quattro 100,100Avant 80CL,GL,Formel E, Quattro 80CC/CD Coupe 80 Coupe GT5S-CD5E-5S 100 C5,CL5,GL5, L5, Avant, Coupe 90E,CoupeGT 100 Avant 100 Avant 5CS, CL5S, GL5C, CD5S 200 5E, Coupe GT5E 200 5T Turbo 200, 200 Turbo Quattro Turbo 200 Quattro Turbo	1984 1986 1983 1982 1981 1984 1981 1981/82 1979/81 1983 1981 1985	1595 1781 1921 1994 2144	4 4 5 5 5	In Ex	ADVI810003 ADVX810003	38 x 7.97 x 98.7 33.2 x 7.97 x 98.5	P P	45-3 45-3
80GTE 80 GTE Quattro	1983 1984	1781	4	In Ex	ADVI810001 ADVX810003	40 x 7.97 x 98.7 33.2 x 7.97 x 98.5	P P	45-3 45-3
80 Quattro Coupe 80, 90 Quattro 90, 90 Quattro 20v 90, 90 2.0 20v Quattro Coupe S2, S4 Avant T S6 2.2 90 E Quattro 20v V8 Quattro	1991 1988 1991 1991 1989	1984 1994 2226 2308 3562 3697 4172	4 4 5 5 8 8 8	In Ex	ADVI810002 ADVX810002	32 x 7 x 95.5 28 x 7 x 98.2	P P	45-1 45-1
100 2.3E, Avant	1990	2308	5	In Ex	ADVI795000 ADVX810004	36 x 7.97 x 95 33.2 x 7.97 x 91.2	P P	45-3 45-3

OE PART NUMBER	VALVE GUIDE PART NUMBER	GUIDE TYPE	MAT.	DIMENSIONS	OE PART NUMBER
03F109601A 03F109611B 03F109611C					
036109601S 036106601AD 036109611K	G3552 G3552	F F	B B	6 x 11.06 x 36 6 x 11.06 x 36	058103415 058103415
036106601AD 036109601S 036109611K	G3552 G3552	F F	B B	6 x 11.06 x 36 6 x 11.06 x 36	058103415 058103415
035109601C 035109601F 035109611F 035109611H	G2664 G3061	G G	B B	8 x 12.06 x 36.5 7.98 x 12.06 x 42.3	056103419A 049103419
026109601 035109611F 035109611H	G2664 G3061	G G	B B	8 x 12.06 x 36.5 8 x 12.06 x 42.3	056103419A 049103419
027109601C 027109611R 027109611C 027109611D	G3504 G3504	G G	B B	7.00 x 12.07 x 38 7.00 x 12.07 x 38	027103419 027103419
069109601F 069109601G 069109601H 053109611	G2664 G2664	G G	B B	8 x 12.06 x 36.5 8 x 12.06 x 36.5	056103419A 056103419A

MODEL	YEAR	CC	No. Cyls	IN/ EX	VALVE PART NUMBER	DIMENSIONS	MAT.	SA CG
80S.CC ,CD, Quattro	1985/87	1595	4	In	ADVI810005	38 x 7.97 x 91.9	P	45-3
80, 80 Quattro	1986	1781	4					
90, 90 Quattro								
100, 100 Avant, Quattro	1988							
Coupe, GT, Quattro	1986/87			Ex	ADVX810005 (S/S by ADVX810004)	33.2 x 7.97 x 90.8	P	45-3
80, 100 CC/CD & Avant, Quattro	1985							
Coupe	1987	1994	5					
90, 100 CC/CD & Avant	1985			Ex	ADVX810004	33.2 x 7.97 x 91.2	P	45-3
Coupe GT	1983	2144	5					
80, 90 & Quattro	1985/87	2226	5					
100 CC, CD, CS & Avant/Quattro	1985/88							
90E Coupe, Quattro, GT	1984							
200 & Turbo	1984/88							
100 & Avant Turbo	1986/88							
100 Quattro Turbo	1986							
80, 90 Quattro & Coupe	1986	1781	4	In	ADVI810004	40 x 7.97 x 91	P	45-3
80GTE, Quattro	1985/86							
100, Avant/ Quattro/CoupeGT	1987							
80 & Quattro	1986	1847	4					
80E & Quattro				Ex	ADVX810005 (S/S by ADVX810004)	33.2 x 7.97 x 90.8	P	45-3
100E Avant/ Coupe	1990	1984	4					
80 Quattro Coupe	1991							
80, 90/90 Quattro 100 & Avant	1987/88	1994	5					
100 & Avant/ Quattro	1984	2226	5	Ex	ADVX810004	33.2 x 7.97 x 91.2	P	45-3
90E & Quattro	1987	2309	5					
100, Avant/ Quattro/CoupeGT	1986 1988							
80 Quattro/Coupe	1991							
100 2.8E & Avant/Quattro	1990	2771						
A3,A4,A6,TT & Avanti	1996	1781	4	In	ADVI810000	27 x 6 x 105.1	C	45-3
All 20v inc. Turbo Eng. Codes AGU,AJL,AJQ, AMB, AMK, APP, APX, ,APY, AQA, ARY, AUM, AUQ, AWT, BAM, BFB, BEX				Ex	ADVX810001	29.9 x 6 x 103.8	C	45-3

OE PART NUMBER	VALVE GUIDE PART NUMBER	GUIDE TYPE	MAT.	DIMENSIONS	OE PART NUMBER
035109301G 035109601J 035109601K	G2664	G	B	8 x 12.06 x 36.5	056103419A
034109611B 035109611K 048109611A 053109611	G2664	G	B	8 x 12.06 x 36.5	056103419A
026109601A 026109601C	G2664	G	B	8 x 12.06 x 36.5	056103419A
034109611B 035109611K	G2664	G	B	8 x 12.06 x 36.5	056103419A
048109611A 053109611	G2664	G	B	8 x 12.06 x 36.5	056103419A
058109601C	G3552	F	B	6 x 11.06 x 36	058103415
058109611E	G3552	F	B	6 x 11.06 x 36	058103415

MODEL	YEAR	CC	No. Cyls	IN/ EX	VALVE PART NUMBER	DIMENSIONS	MAT.	SA CG
A3,A4,A6,A8 inc.Avant, Quattro & Cabrio	1996			In	ADVI810000	27 x 6 x 105.1	C	45-3
20v Engs. ADR, AFY, AGN, AGP, APT, ARX, AUM		1781	4					
				Ex	ADVX810000	29.9 x 6 x 104	P	45-3
30v Engs. AGA, AGB, AJG, ALF, APS, APZ, APR, AQD, ASN, BBJ.		2393 2771 2976	V6 V6 V6					
A3, A4 Engs. ALZ, AVU, BGU	2001	1595	4	In	ADVI810011	39.4 x 6 x 93.8	C	45-3
				Ex	ADVX810011	32.9 x 6 x 93.8	P	45-3
A8 Engs. BHT, BTE	2006	2350	V5	In				
				long	ADVI810016	30.9 x 6 x 136.1	C	45-3
				short	ADVI810017	31 x 6 x 102.2	C	45-3
				Ex				
				Long	ADVX810016	27 x 6 x 136.4	P	45-3
				short	ADVX810017	27 x 6 x 102.5	P	45-3
A3, A4 FSI 16v Engs. AWA, AXW BYK, BLR, BLX., BLY, CABB, CAWB, CFPA, CDNB, CDNC, CAEA	2002	1984	4	In	ADVI825002	33.8 x 6 x 104	C	45-3
				Ex	ADVX825002	28 x 6 x 101.9	P	45-3
80,90,A6 Avant/ Coupe/Cabrio ACE 16v	1994	1985	4	In	ADVI825000	32 x 7 x 95.5	P	45-3
A6/A8 ABH,AEC,ABZ, 32v		4172	V8	Ex	ADVX825000	27 x 7 x 98	P	45-3
80 1.6/2.0 80 Quattro 100 2.0/2.3/2.8	1990 1981/84 1990/94			In	ADVI810007	39.5 x 7.97 x 91.9	P	45-3
Engs. ABB,ADA		1595	4					
3A,AAD,AAE, ABK,ABT,ADW		1984	4	Ex	ADVX810004	33.2 x 7.97 x 91.2	P	45-3
PS,RT		1994	5					
AAR, NG		2309	5					
AAH		2771	V6					
A3, A4 1.6 Engs. ADP, AEH, AHL, ARM	1994	1595	4	In	ADVI825001	39.5 x 7 x 91.9	C	45-3
A4 2.6 Eng. ABC	1994	2598	V6	Ex	ADVX825001	32.9 x 7 x 91.2	P	45-3
A4,A6,A8 Eng. AAH	1998	2771	V6					
A6 2.4 V6 Eng. BDW	2004	2393	V6	In	ADVI810018	32.3 x 6 x 104	C	45-3
				Ex	ADVX825002	28 x 6 x 101.9	P	45-3

OE PART NUMBER	VALVE GUIDE PART NUMBER	GUIDE TYPE	MAT.	DIMENSIONS	OE PART NUMBER
058109601C	G3552	F	B	6 x 11.06 x 36	058103415
058109611M	G3552	F	B	6 x 11.06 x 36	058103415
06B109601B	G11384	F	B	5.98 x 12.06 x 36.5	
06B109611B	G11384	F	B	5.98 x 12.06 x 36.5	
022109601F 022109601E 022109611C 022109611B					
06D109601K	G3552	F	B	6 x 11.06 x 36	058103415
06D109611K 06D109611L	G3552	F	B	6 x 11.06 x 36	058103415
051109601B	G3561 G3504 (ABH ONLY)	G G	B B	7 x 12.07 x 35 7 x 12.07 x 38	051103419 027103419
051109611B	G3561 G3504 (ABH ONLY)	G G	B B	7 x 12.07 x 35 7 x 12.07 x 37	051103419 027103419
048109601A	G2664	G	B	8 x 12.06 x 36.5	056103419A
048109611A 053109611	G2664	G	B	8 x 12.06 x 36.5	056103419A
078109601B	G3593	G	B	7 x 12.07 x 36.5	037103419B
078109611C 048109611B	G3593	G	B	7 x 12.07 x 36.5	037103419B
06E109601H	G3552	F	B	6 x 11.06 x 36	058103415
06D109611K 06D109611L	G3552	F	B	6 x 11.06 x 36	058103415

MODEL	YEAR	CC	No. Cyls	IN/ EX	VALVE PART NUMBER	DIMENSIONS	MAT.	SA CG
AUDI DIESEL								
A2 TDi Eng. ANY	2003	1191	3	In Ex	ADVI765008 ADVX765008	35.9 x 7 x 89.7 31.5 x 7 x 89.7	P P	45-3 45-3
80/90 1.6 N/asp & Turbo Engs. CR, JK, CY YT	1985	1588	4	In Ex	ADVI765005 ADVX795000	34 x 7.97 x 95.1 31.2 x 7.97 x 95	P P	45-3 45-3
A4 2.5TDI A6 2.5TD A8 2.5TDI Eng. AFB, AKE, AYM, AKN.	1998	2496	V6	In Ex	ADVI783000 ADVX783000	27.2 x 6 x 100.6 24.1 x 6 x 100.6	P P	45-3 45-3
A6 2.5 TDi Eng. BCZ	2003	2496	V6	In Ex	ADVI783001 ADVX783001	27.2 x 6 x 100.6 24.1 x 6 x 100.7 9mm 1st groove to top of valve	P P	45-3 45-3
80, 80TD 100 Avant CC/CD 100 Avant CC/CD Turbo Diesel 100/100 AvantTD 100 Engs. 1Y, 1Z, 3D AAZ	1989 1985/86 1988 1989	1896 1986 2360	4 5 5	In Ex	ADVI795000 ADVX795000	36 x 7.97 x 95.5 31.2 x 7.97 x 95.5	P P	45-3 45-3
80TD A4 1.9TDI 100 & Avant 100 & Avant TD A6 2.5TDI Engs. 1Z, 1T, AAS, AAT, ABP.	1991 1995 1990/92 1995	1896 2370 2461	4 5 5	In Ex Ex	ADVI795001 ADVX795001 ADVX795000 (Alt on some AAS & AAT engines)	36 x 7.97 x 96.9 31.5 x 7.97 x 96.9 31.2 x 7.97 x 95.5	P P P	45-3 45-3 45-3
A3 1.9TDI Eng. AEY, AHF, AFN, AGR, ALH, ASV A4 1.9TDI Eng. AFN, AFF, AHH, AHU, AVG	1996	1896	5	In Ex	ADVI795002 ADVX795002	36 x 7 x 96.9 31.5 x 7 x 96.9	P P	45-3 45-3

OE PART NUMBER	VALVE GUIDE PART NUMBER	GUIDE TYPE	MAT.	DIMENSIONS	OE PART NUMBER
045109601 045109611	G3593 G3593	G G	B B	7 x 12.07 x 36.5 7 x 12.07 x 36.5	037103419B 037103419B
068109601L 068109601M 068109601N 068109611L/M 069109611 074109611	G2664 G3061	G G	B B	8 x 12.06 x 36.5 8 x 12.06 x 42.3	056103419A 049103419
059109601B 059109611B	G11255 G11255	F F	B B	5.98 x 10.06 x 42 5.98 x 10.06 x 42	
059109601F 059109611G					
069109601F 069109601G 069109601H 068109611L/M 069109611 074109611	G2664 G2664	G G	B B	8 x 12.06 x 36.5 8 x 12.06 x 36.5	056103419A 056103419A
028109601A-H 046109601G-J 046109611C-F-E 068109611L/M 069109611 074109611	G2664 G2664	G G	B B	8 x 12.06 x 36.5 8 x 12.06 x 36.5	056103419A 056103419A
028109601D 028109611G	G3593 G3593	G G	B B	7 x 12.07 x 36.5 7 x 12.07 x 36.5	037103419B 037103419B

MODEL	YEAR	CC	No. Cyls	IN/ EX	VALVE PART NUMBER	DIMENSIONS	MAT.	SA CG
A2 1.4TDI Eng. AMF, ATL A3, A4, A6 Eng. AJM, AVB, AVF, AWX, ASZ, ATD, BKE.	2000	1422 1896	3 4	In Ex	ADVI795003 ADVX795003	36 x 7 x 89.9 31.5 x 7 x 89.9	P P	45-3 45-3
A3 1.9TDi Eng. BKC	2003	1896	4	In Ex	ADVI795006 ADVX795006	35.9 x 7 x 89.4 31.5 x 7 x 89.1	P P	45-3 45-3
Ai 1.6TDi Eng. CAYC	2010	1598	4	In Ex	ADVI795007 ADVX795007	26.5 x 6 x 99.3 24.4 x 6 x 99.1	P P	45-3 45-3
A4 2.0TDi Engs. BPW, BRC	2004	1968	4	In Ex	ADVI810009 ADVX810009	35.5 x 7 x 89 31.4 x 7 x 88.4	P P	45-3 45-3
A3 2.0 TDI Eng. AZV, BKD	2002	1968	4	In Ex	ADVI810012 ADVX810012	29.4 x 6 x 88.5 25.5 x 6 x 88.2	P P	45-3 45-3
A4 2.0 TDI 16v Eng. AZV, BKD, BLB, BNA, BRE, BRF, BVG	2004	1968	4	In Ex	ADVI810014 ADVX810014	29.1 x 6 x 87.8 25.4 x 6 x 87.5	P P	45-3 45.3
A4 2.0TDi-PD Q5 2.0TDi-PD Eng. CACG CAHA	2008 2009	1968	4	In Ex	ADVI810015 ADVX810015	28.1 x 6 x 99.3 26 x 6 x 99.1	P P	45-3 45-3
A5, A6 2.7 TDi 24v Engs. BPP, BSG, CAMA/B/C/D CANA/B/C/D CGKA/B A4, A5, A6, A8 3.0 TDi 24v Engs. ASB, BKN, BMK, BNG, BUG, CAPA, CASA, CASB, CCWA/B CDYA/B/C	2005 2003	2698 2967	V6 V6	In Ex	ADVI830000 ADVX830000	28.8 x 6 x 99.5 26.8 x 6 x 99.4	P P	45-3 45.3

OE PART NUMBER	VALVE GUIDE PART NUMBER	GUIDE TYPE	MAT.	DIMENSIONS	OE PART NUMBER
038109601B 038109611B	G11257 G11257	F F	B B	7.00 x 12.06 x 31.5 7.00 x 12.06 x 31.5	
038109601E 038109611E	G3593 G3593	G G	B B	7 x 12.07 x 36.5 7 x 12.07 x 36.5	037103419B 037103419B
03L109601A 03L109611A	G11255 G11255 **NOT CONFIRMED CHECK SIZES BEFORE SELLING.**	F F	B B	5.98 x 10.06 x 42 5.98 x 10.06 x 42	
038109601F 038109611G	G3593 G3593	G G	B B	7 x 12.07 x 36.5 7 x 12.07 x 36.5	037103419B 037103419B
03G109601A 03G109611B	G11255 G11255	F F	B B	5.98 x 10.06 x 42 5.98 x 10.06 x 42	
03G109601B 03G109611D	G11255 G11255	F F	B B	5.98 x 10.06 x 42 5.98 x 10.06 x 42	
03L109601 03L109611	G11255 G11255	F F	B B	5.98 x 10.06 x 42 5.98 x 10.06 x 42	
059109601G 059109611K	G11445 G11445	F F	B B	5.98 x 10.06 x 36 5.98 x 10.06 x 36	

MODEL	YEAR	CC	No. Cyls	IN/ EX	VALVE PART NUMBER	DIMENSIONS	MAT.	SA CG
BEDFORD Midi 4FC1 4FD1	 1987/88 1988/92	 1995 2189	 4 4	 In Ex				
Brava KB25 Pick-up Eng. Isuzu, 4ZC1 4ZD1, G180Z (Petrol)	1988/93	1817 1995 2254	4 4 4	In Ex				
KG, KH, KM, YRT 381ci, 466ci TM 500ci Phase 1	1967/72 1966/75 1975/81	6200 7600 8200	6 6 6	In Ex				
TM 500ci Phase 2	1981	8200	6	In Ex				

OE PART NUMBER	VALVE GUIDE PART NUMBER	GUIDE TYPE	MAT	DIMENSIONS	OE PART NUMBER
	01-2325 01-2325	A1 A1	G G	8.00 x 12.03 x 60 8.00 x 12.03 x 60	
	G2804 G2805	A1 A1	G G	7.99 x 12.05 x 45.9 7.99 x 12.05 x 55	8-942067620 8-942067630
	G3311 G3311	A A	G G	8.70 x 13.27 x 64.6 8.70 x 13.27 x 64.6	91021971 91021971
	G3310 G3310	A A	G G	10.00 x 17.01 x 81 10.00 x 17.01 x 81	91000162 91000162

MODEL	YEAR	CC	No. Cyls	IN/ EX	VALVE PART NUMBER	DIMENSIONS	MAT.	SA CG
B.M.W.								
Mini One W10B16A	2001	1598	4	In Ex	BMVI770000 BMVX770000	30.3 x 6 x 109 23.3 x 6 x 117.8	C P	45-3 45-3
Mini One Mini Cooper Engs. N12B14A N12B16A	2007	1397 1598	4	In Ex	BMVI770001 BMVX770001	30 x 5 x 97 25.1 x 5 x 110.8	C C	45-3 45-3
Mini Cooper Mini Cooper S Engs. N14B16A N14B16C	2007	1598	4	In Ex	PGVI785002 PGVX785002	28.8 x 5 x 105.7 26 x 5 x 110.1	C C	45-3 45-3
320, 320i 520, 520i 323i 325, 325E 525, 525E 528E Eng. M20	1977/83 1981/83 1977/84 1983/84	1990 2316 2693	6 6 6	In Ex	BMVI800000 BMVX800000	39.9 x 7 x 102.5 33.9 x 7 x 102.5	P P	45-3 45-3
320i 320i, 520i 24v	1987/90 1990/92	1991	6	In Ex	BMVI800001 BMVX800001	29.9 x 7 x 107.7 26.9 x 7 x 106.8	P P	45-3 45-3
320 (E46) Z3 2.0 520 (E39)	1999	1991	6	In Ex	BMVI800003 BMVX800003	29.9 x 6 x 107 26.9 x 6 x 106.1	P P	45-3 45-
316i 318i 518i Eng. M40	1988 1990	1596 1796	4 4	In Ex	BMVI840000 BMVX840000	42 x 7 x 102 36 x 7 x 101	P P	45-3 45-3
316i 318i 518i Z3 316(E46) 318i(E46) Eng. M43 750i, 850, 850CSi 24v M73	1993/94 1999 1993	1596 1796 1895 5379 5576	4 4 4 V12 V12	In Ex	BMVI840001 BMVX840001	41.9 x 7 x 104 35.9 x 7 x 102.9	P P	45-3 45-3
318i,318i, Ti, Z3 Engs. M42B18 M44B19 323i, 523i 325i, 525i 323, 328 Z3, 528, 728 325, 330, Z3, X5 Engs. M50B25 M52B25/B28/ B52, M54B30 256S5/306S3	1992/97 1995 1992 1999 2001	 1796 1895 1995 2494 2793 2973	 4 4 6 6 6 6	In Ex	BMVI840002 BMVX840002	33 x 6 x 106.1 30.4 x 6 x 105.6	P P	45-3 45-3

OE PART NUMBER	VALVE GUIDE PART NUMBER	GUIDE TYPE	MAT.	DIMENSIONS	OE PART NUMBER
11341485585 11347829943	G11487 G11487	A A	G G	6 x 11.06 x 42 6 x 11.06 x 4	
11347533884 11347533885	G11524 G11526 Check dimensions with	L L customer	B B first.	5.01 x 9.05 x 41 5.01 x 9.05 x 44.5	
	G11524 G11526	L L	B B	5.01 x 9.05 x 41 5.01 x 9.05 x 44.5	
1265453/1267687 11341265453 11341267721 1267688/1271273 1280643 11341280643 11341267722	G2073 G2782 G2073 G2872	F F	B B	7.00 x 13.05 x 45 13.25 7.00 x 13.05 x 45 13.25	1280523 1280523
11341722910 11341722911	G2073 G2782 G2073 G2872	F F	B B	7.00 x 13.05 x 45 13.25 7.00 x 13.05 x 45 13.25	1280523 1280523
11341738220 11341738221 11347502351	G11023 G11023	F F	B B	6 X 12.05 X 43.4 6 X 12.05 X 43.4	
1709955 11341727358 1717978 11341727352	G3145 G3145	F F	B B	7.00 x 12.55 x 43.5 7.00 x 12.55 x 43.5	11121715373 11121715373
11341433892 11341436949 11341739658 11341436950 11341433893 11341739665	G3145 G3145	F F	B B	7.00 x 12.55 x 43.5 7.00 x 12.55 x 43.5	11121715373 11121715373
11341738218 11341739820 11341739822 11341438451 11341738219 11341739821 11341739823 11347505731	G11023 G3544 G11023 G3544	F F F F	B B B B	6 x 12.05 x 43.4 6 x 12.56 x 43.5 6 x 12.05 x 43.4 6 x 12.56 x 43.5	 11121735534 11121735534

MODEL	YEAR	CC	No. Cyls	IN/ EX	VALVE PART NUMBER	DIMENSIONS	MAT.	SA CG
316i 318i/is 325i 24v 525i 24v Engs. M42, M50	1991 1989/91 1991/92 1990/92	1796 2494	4 6	In Ex	BMVI840003 BMVX840003	32.9 x 7 x 106.7 30.4 x 7 x 106.3	P P	45-3 45-3
316Ti, 318Ti 16v 118i, 120i 16v 320i 16v Eng. N42B20A N46B18A/B20A	2001	1796 1995	4	In Ex	BMVI840004 BMVX840004	32 x 6 x 100 28.9 x 6 x 100.1	C C	45-3 45-3
325i, Ci 525i Z1 Eng. M20	1985 1988/91	2494	6	In Ex	BMVI840006 BMVX840006	42 x 7 x 102.5 36 x 7 x 102.5	P P	45-3 45-3
130i 330i 530i 630i 730i X3, X5, Z4 Engs. N52B30A,	2007 2005	2996	6	In Ex	BMVI850005 BMVX850005	34.2 x 5 x 104.5 29 x 6 x 110.6	C C	45-3 45-3
135i 335i 740i 24v X6, Z4 Eng. N54B30A	2006 2007	2979	6	In Ex	BMVI850006 BMVX850006	31.4 x 5 x 106.6 28 x 6 x 114.6	C C	45-3 45-3
3, 5, 7, Series M10, M20, M30, M40	1963/88	1573 1766 1796 1990 2494 2788	4 4 4 6 6 6	In Ex				
M3 Z3 Eng. S50	1995-99 1997	3201(6)		In Ex	BMVI860000 BMVX860000	35 x 6 x 119.8 30.5 x 6 x 121.3	C C	45-3 45-3
535i, 540i 840Ci M5 E39 X5 M62TU/M60B40/ M62B46	2001	3498 4398 4619 4941	V8	In Ex	BMVI920000 BMVX920000	35 x 6 x 104.1 30.4 x 6 x 103.6	P P	45-3 45-3
116i 16v Eng. N45B16A 545, 745 E60 M62 760 E65 M73	2004 2003 2004	1596 4398 5972	4 V8 V12	In Ex	BMVI920001 BMVX840004	34.9 x 6 x 100 28.9 x 6 x 100.1	C C	45-3 45-3

OE PART NUMBER	VALVE GUIDE PART NUMBER	GUIDE TYPE	MAT.	DIMENSIONS	OE PART NUMBER
11341722908	G3145	F	B	7.00 x 12.55 x 43.5	11121715373
11341722909 11341726903	G3145	F	B	7.00 x 12.55 x 43.5	11121715373
11341440304	G11023 G3544	F F	B B	6 x 12.05 x 43.4 6 x 12.56 x 43.5	11121735534
11341707519	G11023 G3544	F F	B B	6 x 12.05 x 43.4 6 x 12.56 x 43.5	11121735534
11341720827 11341708895	G2073 G2782	F	B	7.00 x 13.05 x 45 13.25	1280523
11341720828 11341708896	G2073 G2782	F	B	7.00 x 13.05 x 45 13.25	1280523
11347553771 1134753772					
11347553775 11347553776					
	G2070 G2067	F F	B B	8 x 14.05 x 50 8 x 14.04 x 52	11121263642 11120721100
	G2070 G2067	F F	B B	8 x 14.05 x 50 8 x 14.04 x 52	11121263642 11120721100
11341404588	G3544	F	B	6.00 x 12.56 x 43.5	11121735534
11341404589	G3544	F	B	6.00 x 12.56 x 43.5	11121735534
1731640/1736549 1435480/1408015 1736558/1741231 1433481/1433699 1408016 All prefixed 1134	G3544 G3544	F F	B B	6.00 x 12.56 x 43.5 6.00 x 12.56 x 43.5	11121735534 11121735534
11347503737 11341435461	G11486	A	B	6 x 10.05 x 39	
11347503738 11341707519 11347592839	G11486	A	B	6 x 10.05 x 39	

MODEL	YEAR	CC	No. Cyls	IN/ EX	VALVE PART NUMBER	DIMENSIONS	MAT.	SA CG
BMW DIESEL								
Mini One W17D14A	2002	1364	4	In Ex	TYVI710000 TYVX710000	30.6 x 6 x 100 28 x 6 x 100	C C	45-1 45-1
318TDS, 325TDS 525TDS, 725TDS Eng. M41/M51	1992	1665 2498	4 6	In Ex	BMVI800002 BMVX800002	35.9 x 6 x 103.7 30.9 x 6 x 103.6	P P	45-3 45-3
318TDS 325/525 TDS M51D25	1991 1990	1665 2498	4 6	In Ex	BMVI800004 BMVX800004	35.9 x 7 x 103.7 30.9 x 7 x 103.5	P P	45-3 45.3
X3, X5 320D 330D, 530D, 730D 540D, 740D Engs. M47D20-204D4, M57D30, M57N30-306D3 306D4 , M67D39	2000 1998 1998 2004	1951 2926 2993 3901	4 6 6 V8	In Ex	BMVIX840005 BMVIX840005	} 25.9 x 6 x 99.9	P	45-3
X3, X5 330D X6 335D 535D Eng. N57N306D5	2006	2993	6	In Ex	BMVI840007 BMVIX840005	27.5 x 6 x 99.8 25.9 x 6 x 99.9	P P	45-3 45-3
123D X1/X3 325/330/335D Eng. N47D20B/C, N57D30A	2007	1995 2496 2993	4 6 6	In Ex	BMVI840008 BMVX840008	27.2 x 5 x 94 24.6 x 5 x 94	P P	45-3 45-3

OE PART NUMBER	VALVE GUIDE PART NUMBER	GUIDE TYPE	MAT.	DIMENSIONS	OE PART NUMBER
11347791054	G11368	P-1	G	6.01 x 11.04 x 40.6	11122-30020
11347791055	G11368	P-1	G	6.01 x 11.04 x 40.6	11122-30020
11342244814 11342246524	G13599	F	B	6 x 12.55 x 39.5	2244464
11342244815 11342246525	G13599	F	B	6 x 12.55 x 39.5	2244464
11342244858 11342343328	G2073	F	B	7 x 13.05 x 45	11121280523
11342244851 11342244282	G3141	F	B	7 x 13.05 x 52	
11342247077	G11313	A	B	6 x 11.54 x 39	
1134779612	G11313	A	B	6 x 11.54 x 39	
11342247077	G11313	A	B	6 x 11.54 x 39	
11127797711	G11528	A	B	5 x 10.05 x 36	
11347797712	G11528	A	B	5 x 10.05 x 36	

MODEL	YEAR	CC	No. Cyls	IN/ EX	VALVE PART NUMBER	DIMENSIONS	MAT.	SA CG
CHRYSLER								
P.T. Cruiser 1.6 16v Eng. N30N (R50 Tritec)	2003	1598	4	In Ex	BMVI770000 BMVX770000	30.3 x 6 x 109 23.3 x 6 x 117.8	C P	45-3 45-3
Stratus 2.5 24v	1995/99	2497	V6	In Ex	MIVI850002 MIVX850002	33 x 6 x 112.3 29 x 6 x 114.1	C C	45-1 45-1
Neon 2.0 16v Stratus 2.0 16v	1994	1996	4	In Ex	CHVI875000 CHVX875000	33.2 x 6 x 114.9 28.7 x 6 x 117.2	C C	45-1 45-1
Neon P.T. Cruiser Sebring Stratus Voyager Eng. ECC 2.0 16v Eng. EDV 2.4 16v	1996 2000 2001 1995 2000	1995 2429	4	In Ex	CHVI875001 CHVX875001	34.8 x 6 x 111.6 28.5 x 6 x 109.8	C C	45-3 45-3
Voyager V6	1990	3301 3778	V6 V6	In Ex	CHVI930000 CHVX930000	45.5 x 8 x 125.8 37.4 x 8 x 126.3	C C	45-2 45-4
Hillman Hunter Hillman Minx Singer Gazelle Singer Vogue Sumbeam	1966	1725	4	In Ex				
Simca 1300 Talbot Horizon	1975	1299	4	In Ex				
Avenger Sunbeam	1970/81	1299 1598	4 4	In Ex				

OE PART NUMBER	VALVE GUIDE PART NUMBER	GUIDE TYPE	MAT.	DIMENSIONS	OE PART NUMBER
04777770AB 04777772AB-AC	G11487 G11487	A-1 A-1	G G	6 x 11.06 x 42 6 x 11.06 x 42	
MD301193 MD306183					
04648615 04648613					
04667969AB 04777898AA	G11501 G11501	A-1 A-1	G G	6 x 11.08 x 44 6 x 11.08 x 44	
4448052 4621115					
	01-0868 01-0869	A1 A1	G G	7.94 x 14.33 x 50.8 7.94 x 14.33 x 54.8	5118370 5118376
	01-1359 01-1359	F1-1 F1-1	G G	8.02 x 14.01 x 49 8.02 x 14.01 x 49	35513 35513
	01-1921 01-1922 (flanged) 01-1921 01-1922(flanged)	A A A A	G G G G	7.91 x 11.16 x 60.3 7.91 x 11.16 x 60.3 7.91 x 11.16 x 60.3 7.91 x 11.16 x 60.3	

MODEL	YEAR	CC	No. Cyls	IN/ EX	VALVE PART NUMBER	DIMENSIONS	MAT.	SA CG
CHRYSLER DIESEL								
Sebring 2.0 CRD ENG. ECD 16v	2007	1968	4	In	ADVI810014	29.1 x 6 x 87.8	P	45-3
				Ex	ADVX810014	25.4 x 6 x 87.5	P	45-3
P.T. Cruiser 2.2 CRD 16v Eng. OM664	2002	2151	4	In	MBVI880000	30.1 x 7 x 104	P	45-1
				Ex	MBVX880000	28.4 x 7 x 104.4	P	45-1
Voyager 2.5TD	1992	2499		In	VMVI920000	40.1 x 8 x 121	P	35-1
				Ex	VMVX920000	34 x 8 x 121	P	45-1
Voyager CRD Grand Voyager CRD		2499		In	CHVI920000	32.4 x 6 x 109	P	45-3
				Ex	CHVX920000	30.9 x 6 x 108.3	P	45-3

OE PART NUMBER	VALVE GUIDE PART NUMBER	GUIDE TYPE	MAT.	DIMENSIONS	OE PART NUMBER
68001582AA	G11255	F	B	5.99 x 10.06 x 42	
68001583AA	G11255	F	B	5.99 x 10.06 x 42	
05073735AA	G11054	F	G	7 x 12.57 x 37.6	
05073738AA	G11054	F	G	7 x 12.57 x 37.6	
04720146	G3126	A	G	8.01 x 14.07 x 55	60507152
04720148	G3126	A	G	8.01 x 14.07 x 55	60507152
05066770AA	G11476	F	G	6.01 x 11.03 x 44.5	5066773AA
05066769AA	G11476	F	G	6.01 x 11.03 x 44.5	5066773AA

MODEL	YEAR	CC	No. Cyls	IN/ EX	VALVE PART NUMBER	DIMENSIONS	MAT.	SA CG
CITRÓEN								
AX10 SAXO 1.0 Eng TU9	1986 1999	954	4	In	PGVI700000	34.7 x 7 x 112.8	P	30-1
				Ex	PGVX700000	27.7 x 7 x 112.6	P	45-1
C1 1.0i 12v Eng. 1KR-FE	2005	998	3	In	TYVI710002	27.5 x 5 x 88.5		45-1
				Ex	TYVX710002	23.6 x 5 x 89.1		45-1
AX 1.1RE/TRE Saxo 1.1 Eng TU1 AX Sport AX1.4 TRS, TZS TZX AX GT AX XT, ZX Reflex ZX Advantage Aura AX 1.4TGS/4.x4 Turbo ZX Tilt 1.4i & Break AX GT Saxo 1.4VTS ZX 1.4 Xsara 1.4 Coupe VTR Engs. TU3MZ/2K TU3S, TUFJZ.	1986 1987 1991 1993 1999	1124 1294 1361	4 4 4	In In Ex	PGVI720000 PGVI720001 PGVX720000	36.7 x 7 x 112.8 36.7 x 7 x 112.8 29.2 x 7 x 112.6	P P P	30-1 45-1 45-1
Berlingo 1.4 AX XSI, Allure Saxo 1.6 Xsara 1.6 Xsara Picasso 1.6 Eng. TU3F-J2K	1991 1999	1361 1587	4 4	In In Ex	PGVI750000 PGVI750001 PGVX750000	39.4 x 7 x 111.7 39.4 x 7 x 111.7 31.3 x 7 x 111.5	C C C	30-3 45-3 45-3
C4 1.4 16v Eng. ET3J4	2004	1360	4	In	PGVI750002	28.3 x 5.5 x 100.8	C	45-3
				Ex	PGVX750002	24.3 x 5.5 x 101.1	C	45-3
C3, C4 DS3 DS4 C4, C5. Eng.EP3C/EP6C	2007	1397 1598	4	In	BMVI770001	30 x 5 x 97		45-3
				Ex	BMVX770001	25.1 x 5 x 110.8		45-3
Saxo 1.6 VTS 16v Eng. TU5 J4	1999	1587	4	In	PGVI785000	28.7 x 6 x 104.4	C	45-1
				Ex	PGVX785000	24.6 x 6 x 104.2	C	45-1
Berlingo 1.6 16v Xsara Coupe 1.6 16v Eng. TU5 JP4	2001	1587	4	In	PGVI785001	31.2 x 6 x 103.7	C	45-1
				Ex	PGVX785000	24.6 x 6 x 104.2	C	45-1

OE PART NUMBER	VALVE GUIDE PART NUMBER	GUIDE TYPE	MAT.	DIMENSIONS	OE PART NUMBER
97531079 094857 97531046 094958	G3159 01-2459 G3159 01-2459	F F F F	G B G B	7 x 13.06 x 47.5 7 x 13.06 x 47.6 7 x 13.06 x 47.5 7 x 13.06 x 47.6	022059 Bronze 022059 Bronze
0948.E2 0948.C8	G11364 G11364	P-1 P-1	G G	5 x 9.74 x 34.5 5 x 9.74 x 34.5	0221.28 0221.28
97531080 094858 094891 97531044 094959	G3159 01-2459 G3159 01-2459	F F F F	G B G B	7 x 13.06 x 47.5 7 x 13.06 x 47.6 7 x 13.06 x 47.5 7 x 13.06 x 47.6	022059 Bronze 022059 Bronze
96183535 96096852 96101887 094970 094893	G3159 01-2459 G3159 01-2459	F F F F	G B G B	7 x 13.06 x 47.5 7 x 13.06 x 47.6 7 x 13.06 x 47.5 7 x 13.06 x 47.6	022059 Bronze 022059 Bronze
0948C8 0949C4	G11495 G11495	A A	B B	5.5 x 10.57 x 38 5.5 x 10.57 x 38	
0948F9 0949F6	G11524 G11526	A A	B B	5.01 x 9.05 x 41 5.01 x 9.05 x 44.5	
094883 094989	G11259 G11259	F F	B B	6 x 11.06 x 40 6 x 11.06 x 40	022095 022095
0948A9 094989	G11259 G11259	F F	B B	6 x 11.06 x 40 6 x 11.06 x 40	022095 022095

MODEL	YEAR	CC	No. Cyls	IN/ EX	VALVE PART NUMBER	DIMENSIONS	MAT.	SA CG
DS3/DS5 C4 Eng.EP6DT/DTF/ CDT/CDTM	2006	1587	4	In Ex	PGVI785002 PGVX785002	28.8 x 5 x 105.7 26 x 5 x 110.1	C C	45-3 45-3
DS4 DS5 C4, Picasso Eng. EP6CDTX	2006	1587	4	In Ex	PGVI785003 PGVX785002	29.7 x 5 x 95.1 26 x 5 x 110.1	C C	45-3 45-3
Xsara Picasso 1.8 16v Eng. EW7J4	2001	1749	4	In Ex	PGVI830003 PGVX830003	29.8 x 6 x 106 27.3 x 6 x 104	P P	45-1 45-1
Visa GTi BX16 RS/TRS ZX Aura Xantia 1.6 & XS ZX Break & Advantage ZX 1.8 Break & Advantage Xantia 1.8 XS Xsara 1.8 Berlingo 1.8 BX19 TRS/TRI BX 4x4 Break Jumper 27 2.0B Engs. XU5-XU5JA- XU5M-XU7JP-XU9-2C-XU9C-XU9M-XU9JA	1985 1991 1993 1999 1987 1988 1999	1580 1761 1905	4 4 4	In Ex	PGVI830002 PGVX830002	41.6 x 8 x 108.8 34.5 x 8 x 108.4	P P	45-1 45-1
Xantia 1.8i 16v BX1.9 16v GTI ZX 16v 2.0 XM 2.0 16v Xantia SX 2.0i 16v Engs. XU7JP4-XU9J4-XU10J4R	1995 1987/88 1995	1761 1905 1998	4 4 4	In Ex	PGVI860000 PGVX860000	34.6 x 7 x 106.4 29.6 x 7 x 105.8	P P	45-3 45-3
XM 2.0,Ambience & Harmonie Xantia SX-VSX XM 2.0 Turbo Xantia 2.0 Turbo Evasion 2.0 Evasion 2.0 CT Engs. XU10J2-XU10J2TE-XU102C	1989	1998	4	In Ex	PGVI860001 PGVX860001	42.6 x 8 x 108.8 34.5 x 8 x 108.4	P P	45-3 45-3

OE PART NUMBER	VALVE GUIDE PART NUMBER	GUIDE TYPE	MAT.	DIMENSIONS	OE PART NUMBER
0948E8 0949E2	G11524 G11526	A A	B B	5.01 x 9.05 x 41 5.01 x 9.05 x 44.5	
0948G4 0949E2	G11524 G11526	A A	B B	5.01 x 9.05 x 41 5.01 x 9.05 x 44.5	
0948A4 0949A4	G11315 G11317	F F	B G	6 x 12.07 x 40 6 x 12.07 x 40	02130.12 02130.13
91535017 91537468 094856 094887 91535019 91537470 094957	G3239 G3240 01-2300 G3241 G3242 01-2303	F-3 F	B B	8.01 X 13.06 X 38.7 13.11 13.28 8.01 X 13.07 X 45 13.12 13.28	 022072
96142795 91540748 094875 96172795 91540782 094981	G3538 G3538	F F	B B	7 x 12.06 x 40 7 x 12.06 x 40	022119 022119
96060701.80 96059361 094866 96060704.80 96059362 96147032.80 094972 094976	G3340 G3341 G3344 G3345	F F	B B	8.01 x 13.07 x 43.6 13.12 8.01 x 13.07 x 50.6 13.12	022085 022121

MODEL	YEAR	CC	No. Cyls	IN/ EX	VALVE PART NUMBER	DIMENSIONS	MAT.	SA CG
Xsara 1.8 Xantia 1.8 16v Evasion 2.0 16v XM 2.0 16v Engs. XU7JP4 07795 on XU10J4R 07358 on	 2001 1999	1761 1998	4 4	In Ex	PGVI860003 PGVX860003	34.6 x 6 x 106.3 29.6 x 6 x 105.7	P P	45-1 45-1
Xsara Coupe 2.0 16v C5 2.0 16v Evasion 2.0 16v Engs. RF8-RFN (EW10J4)	2001	1997	4	In Ex	PGVI860004 PGVX860004	33.3 x 6 x 106.1 28.9 x 6 x 103.6	C P	45-1 45-1
C5 2.0 16v HPI Eng. RLZ (EW10J4)	2001	1998	4	In Ex	PGVI850001 PGVX850001	32.4 x 6 x 105.1 29.2 x 6 x 102.7	C C	45-1 45-1
C8 2.2 16v Eng. 3FZ (EW12J4)	2000	2230	4	In Ex	PGVI860006 PGVX860006	35.1 x 6 x 106 30.9 x 6 x 102.9	C C	45-1 45-1
Xsara VTS 2.0 16v Eng. XU10J4RS	2001	1998	4	In Ex	PGVI860007 PGVX860007	34.1 x 6 x 106.4 30.7 x 6 x 105.3	C C	45-1 45-1
XM 3.0 V6 Eng. ZP3	1989	2975	V6	In Ex	RNVI910000	46 x 8 x 112.6	C	45-1
CX 2.0 Eng. 829-A5 CX22 Eng. J6TA500	1979 1985	1995 2165	4 4	Ex	RNVX910000	38.6 x 8 x 111.4	P	45-1
Xantia XM C5 C8 Eng. ES9j4/J4s	1997 1997/00 2001 2002	2946	V6	In Ex				

OE PART NUMBER	VALVE GUIDE PART NUMBER	GUIDE TYPE	MAT.	DIMENSIONS	OE PART NUMBER
094892	G11158	P	B	6 x 12.07 x 40.8	022125
094992 0949A6	G11159	P	G	6 x 12.07 x 40.8	022126
094899	G11315	F	B	6 x 12.07 x 40	02130.12
094999	G11317	F	G	6 x 12.07 x 40	02130.13
0948A7 0948C6	G11315	F	B	6 x 12.07 x 40	02130.12
0949A7 0949C2	G11317	F	G	6 x 12.07 x 40	02130.13
0948A1	G11315	F	B	6 x 12.07 x 40	02130.12
0949A2	G11317	F	G	6 x 12.07 x 40	02130.13
094882	G11352	F	B	6 x 12.07 x 41	
094987	G11352	F	B	6 x 12.07 x 41	
7910248209 7910248148	G11029 G11030	P	B	8.01 x 13.07 x 48.4 13.12	
	G3241	F	B	8.01 x 13.07 x 45	
95536523	G2980	F-1	G	8.01 x 13.05 x 51	
	G11259	F	B	6.00 x 11.06 x 40	
	G11259	F	B	6.00 x 11.06 x 40	

MODEL	YEAR	CC	No. Cyls	IN/ EX	VALVE PART NUMBER	DIMENSIONS	MAT.	SA CG
CITRÓEN DIESEL								
C3 1.4 16v HDI Eng. DV4TED4	2004	1400	4	In Ex	CTVI737000 CTVX737000	24.3 x 5.5 x 96.40 22.4 x 5.5 x 96.5	C C	45-3 45-3
AX14 D/RD/TRD Eng. TUD3	1988	1361	4	In Ex	CTVI750000 CTVX750000	35.5 x 7 x 108.5 30.5 x 7 x 108	P P	45-1 45-1
C3, C4, C5 Xsara Picasso Berlingo 1.6 16v HDi Eng. DV6TED4 9HX-9HY-9HY	2004	1560	4	In Ex	CTVI750001 CTVX750001	25.6 x 5.5 x 96.40 23.4 x 5.5 x 96.6	C C	45-3 45-3
C3,4,5 1.6HDi DS3,4,5 1.6HDi Eng, 9HR(DV6C)	2010 2011	1560	4	In Ex	CTVI750003 CTVX750003	30.2 x 5.5 x 95.5 27.5 x 5.5 x 95.5	P P	45-3 45-3
C3 1.4 HDI Eng. DV4TD	2002	1398	4	In Ex	PGVI770000 PGVX770000	32.8 x 5.5 x 97.3 30.3 x 5.5 x 97.3	C C	45-3 45-3
AX 15DX Saxo 15D Eng. TUD5	1994 1999	1527	4	In Ex	CTVI770000 CTVX770000	37 x 7 x 108.5 31.5 x 7 x 108.2	P P	45-1 45-1
Visa, BX17 C15D ZX, BX19 Engs. XUD7/ XUD9/9A Normally Aspirated	1983	1769 1905	4 4	In Ex	PGVI830000 PGVX830001	38 x 8 x 112.5 33 x 8 x 112	P P	30-1 45-1
BX17DTR C15TD Eng. XUD7-TE Xsara 1.9D Berlingo 1.9D Eng. DW8 BX19TRD ZX19TD Xantia TD Evasion TD Jumper 1.9D/TD Engs. XUD9-TE/ XUD9-TF Turbocharged	1983 1998 1983 1993 1994	1769 1868 1905	4 4 4	In Ex	PGVI830001 PGVX830001	38.5 x 8 x 112.4 33 x 8 x 112	P P	45-1 45-1

OE PART NUMBER	VALVE GUIDE PART NUMBER	GUIDE TYPE	MAT.	DIMENSIONS	OE PART NUMBER
0948C4 0949C1	G11413 G11413	A1 A1	G G	5.5 x 9.54 x 34 5.5 x 9.54 x 34	
95638449 96012815 95638450 96012816	G3555 G3555	F F	B B	7 x 13.07 x 40.2 7 x 13.07 x 42.8	
0948C7 0949C3	G11413 G11413	A-1 A-1	G G	5.5 x 9.54 x 34 5.5 x 9.54 x 34	
0948f7 0949f5	G11413 G11413	A1 A1	G G	5.5 x 9.54 x 34 5.5 x 9.54 x 34	
0948C2 0949B1	G11413 G11413	A-1 A-1	G G	5.5 x 9.54 x 34 5.5 x 9.54 x 34	
96150145 094874 0948A8 96150144 094980	G3555 G3555	F F	B B	7 x 13.07 x 40.2 7 x 13.07 x 40.2	
93501070 93501279 094846 93501280 93510773 93510774 96005392 96137360/96272853 094960/094973	G3167 to 1986 G3168 G3163 1986 on G3528 Step type G3167 to 1986 G3168 G3163 1986 on G3528 Step type	A-1 A-1 F A-1 A-1 F	B B B B B B B	8.02 x 14.06 x 50 14.11 8.02 x 14.05 x 52 8.02 x 14.05 x 48 8.02 x 14.06 x 50 14.11 8.02 x 14.05 x 52 8.02 x 14.05 x 48	022055 0220.75 022055 0220.75
93510365 93510415 9005391 094859 094863 094894 93501280 93510773 93510774 96005392 96137360 96272853 094960/094973	G3528 XUD9TE/F G3163 DW8 G3528 XUD9TE/F G3163 DW8	F F F F	B B B S06	8.02 x 14.05 x 48 8.02 x 14.05 x 52 8.02 x 14.05 x 48 8.02 x 14.05 x 52	0220A0 0220A0

MODEL	YEAR	CC	No. Cyls	IN/ EX	VALVE PART NUMBER	DIMENSIONS	MAT.	SA CG
Xantia 2.1 TD XM 2.1 TD Ambience & Harmonie Evasion 2.1TD Eng. XUD11ATE, XUD11BTE 12V Turbocharged	1995 1989 1995-98	2088 2138	4 4	In Ex	PGVI860002 PGVX860002	33.9 x 8 x 122.3 33.9 x 8 x 121.9	P P	45-3 45-3
Evasion HDI Xantia HDI Xsara HDI Berlingo HDI C5 HDI Jumpy HDI Engs. DW10TD,ATED, BTED 8v	1999 2001	1997	4	In Ex	PGVI850000 PGVX850000	35.6 x 6 x 107.1 33.8 x 6 x 107.1	P P	45-3 45-3
Evasion C8 HDI Jumpy HDI Eng. DW10ATED 16v	2001	1997	4	In Ex	PGVI850003 PGVX850003	29.6 x 6 x 106.2 25 x 6 x 106.2	P P	45-3 45-3
C5 2.2 16v C8 2.2 16v Eng. DW12TED4 (4HX-4HW)	2001	2179	4	In Ex	PGVI850002 PGVX850002	29.8 x 6 x 105 25 x 6 x 104.9	P P	45-3 45-3
C5 2.2 HDi C8 2.2 HDi Eng. DW12BTED4 (4HT)	2008	2179	4	In Ex	PGVI850004 PGVX850004	27.2 x 6 x 95.8 25 x 6 x 95	P C	45-3 45-3
XM 2.5TD Jumper 31 2.5D Engs. DJ5TD DK5-ATE 12v	1994	2446	4	In Ex	PGVI920000 PGVX920000	36.9 x 7 x 127.8 36.9 x 7 x 127.5	P P	45-3 45-3
Jumper 2.5TD Eng. DJ5TED 8v	1996	2446	4	In Ex	PGVI920001 PGVX920001	41 x 7 x 115.6 37.7 x 7 x 115.4	P P	45-3 45-3
Jumper 31 2.8D Sofim eng. 8140.63	2001	2799	4	In Ex	FTVI930002 FTVX930002	43.4 x 8 x 121.7 35.9 x 8 x 122	P P	30-1 45-1
Jumper 31 2.8TD Sofim eng. 8140.43S	2001	2799	4	In Ex	FTVI930000 FTVX930002	40.8 x 8 x 120.7 35.9 x 8 x 122	P P	30-1 45-1

OE PART NUMBER	VALVE GUIDE PART NUMBER	GUIDE TYPE	MAT.	DIMENSIONS	OE PART NUMBER
96007817 96008334 094868 96042957 96079213 094968	G3513 G3513	F F	B B	8.01 x 13.06 x 54.5 8.01 x 13.06 x 54.5	220081 220081
094895 094996	GS11396 -CH8393 GS11319 CH8394 on GS11396 -CH8393 GS11319 CH8394 on	F A F A	S06 S06 S06 S06	6 x 12.06 x 42.5 6 x 10.06 x 41.5 6 x 12.06 x 42.5 6 x 10.06 x 41.5	0220A1 0220A2 0220A1 0220A2
0948C0 0949A9	GS11396 -CH8393 GS11319 CH8394 on GS11396 -CH8393 GS11319 CH8394 on	F A F A	S06 S06 S06 S06	6 x 12.06 x 42.5 6 x 10.06 x 41.5 6 x 12.06 x 42.5 6 x 10.06 x 41.5	0220A1 0220A2 0220A1 0220A2
0948A3 0949A3	GS11319 GS11319	A A	S06 S06	6 x 10.06 x 41.5 6 x 10.06 x 41.5	0220A2 0220A2
0948.E5 0949.E1	GS11319 GS11319	A A	S06 S06	6 x 10.06 x 41.5 6 x 10.06 x 41.5	0220A2 0220A2
094872 96095457 094979 96096146	G3566 G3566	F F	B B	7.01 x 13.05 x 54 7.01 x 13.05 x 54	022093 022093
094884 094990	G11415 G11415	F F	B B	7 x 13.07 x 43.1 7 x 13.07 x 43.1	
094896 0949A0	G2713 G2713	F F	G1 G1	8.03 x 13.03 x 56 8.03 x 13.03 x 56	
0948A2 0949A0	G2713 G2713	F F	G1 G1	8.03 x 13.03 x 56 8.03 x 13.03 x 56	

MODEL	YEAR	CC	No. Cyls	IN/ EX	VALVE PART NUMBER	DIMENSIONS	MAT.	SA CG
CUMMINS								
6B, 6BT, 6BTA	1984		6	In	CMVI102000	45 x 8 x 129.2	P	30-1
				Ex	CMVX102000	42 x 8 c 129	P	45-1
LT10-250B LT10C-A225 LT10C-C225 LTA10-290B LTA10-A250 LTA10C-300	1984	10000	6	In Ex				
NH230, 230B NH250,250B, 250C, 250P NHC250 NHC1270 NHCT-C1 NHCT-NNH250 NHE220, 225, 225B NT270, 280, 300, 310, 335, 370, 400, 420 NTA380 NTC230, 250, 280, 290, 335, 350, 400 NTF365	1960	9640	6	In Ex	CMVIX139700 CMVIX139700	47.5 x 11.5 x 179.5 47.5 x 11.5 x 179.5	P P	30-2 30.2

OE PART NUMBER	VALVE GUIDE PART NUMBER	GUIDE TYPE	MAT.	DIMENSIONS	OE PART NUMBER
3802355 3920867 3802356 3920868	01-5684 01-5685	B B	G G	8.03 x 11.18 x 60.5 8.03 x 11.18 x 57.8	
	01-5602 01-5796 (when seal fitted) 01-5602 01-5796 (when seal fitted)	A F A F	G G G G	9.68 x 16.53 x 74.4 9.68 x 16.53 x 66 9.68 x 16.53 x 74.4 9.68 x 16.53 x 66	3033314 3073512 3033314 3073512
300926 145701 135957 300926 145701 135957	01-1358 01-1358	A7 A7	G G	11.50 x 19.09 x 86 11.50 x 19.09 x 86	3006456 3006456

MODEL	YEAR	CC	No. Cyls	IN/ EX	VALVE PART NUMBER	DIMENSIONS	MAT.	SA CG
DAEWOO								
Matiz Eng. F8CV	9/1998	796	3	In	DWVI685000	35.6 x 5.5 x 110.6	C	45-1
Matiz 1.0i Eng. B10S	2003	995	4	Ex	DWVX685000	31.8 x 5.5 x 110.4	C	45-1
Kalos 1.2 Eng. F12S3	2002	1148	4					
Lanos 8v A13DM/14SMS	1998	1349	4	In	DWVI765000	37.9 x 7 x 103.5	C	45-1
				Ex	DWVX765000	31 x 7 x 103.6	C	45-1
Kalos SOHC F14S3	2002	1399	4	In	DWVI779000	38 x 6 x 104	C	45-3
				Ex	DWVX779000	31 x 6 x 104	C	45-3
Kalos DOHC F14D5	2002	1399	4	In	DWVI779001	28.6 x 6 x 101.6	C	45-1
Laccetti F16D3	2004	1598		Ex	DWVX779001	27.3 x 6 x 101.2	C	45-1
Nexia 1.5 8v	1996	1498	4	In	OPVI790003	38 x 7 x 101.3	C	45-1
				Ex	OPVX790003	31 x 7 x 101.4	C	45-1
Nubira 1.5 16v Nubira 1.6 16v	1995 1998	1498 1598	4 4	In	DWVI790000	30.3 x 6 x 102.4	P	45-1
Lanos 1.6 16v A15DMS A16DMS				Ex	DWVX790000	26 x 6 x 102.1	C	45-1
Tacuma 1.8SX Eng. F18N	2001	1761	4	In	DWVI848000	38 x 6 x 101.3	C	45-3
				Ex	DWVX848000	31.4 x 6 x 101.1	C	45-3
Espero 1.8 Espero 2.0	1996 1999	1796 1998	4 4	In	DWVI860000	41.8 x 7 x 104.1	C	45-1
Nubira 2.0 C20SE 8v				Ex	DWVX860000	36.5 x 7 x 103.5	C	45-1
Leganza Nubira Tacuma	1999 1999 2001	1998	4	In	OPVI860000	32 x 6 x 102.1	P	45-3
Leganza Engs. T20SED T22SED X20SED	1999	2198	4	Ex	OPVX860000	29 x 6 x 92.2	P	45-3
DAEWOO	**DIESEL**							
Truck Plus	2000	1900	4	In	PGVI830001	38.5 x 8 x 112.4	P	45-1
				Ex	PGVX830001	33 x 8 x 111.8	P	45-1
Captiva Nubira Epica 2.0 TDCi	3007	1991	4	In	OPVI830000	28.5 x 6 x 95.7		45-3
Engs. Z20DM Z20DMH				Ex	OPVX830000	24.4 x 6 x 95.7		45-3

OE PART NUMBER	VALVE GUIDE PART NUMBER	GUIDE TYPE	MAT.	DIMENSIONS	OE PART NUMBER
12911/78800/000 96352793	G11184 G11184	P P	G G	5.50 x 11.07 x 43 5.50 x 11.07 x 43	11115A-70B00 11115A-70B00
96182934 96182933	G11417 G11417	A-1 A-1	G G	7.02 x 11.03 x 47.5 7.02 x 11.03 x 47.5	96350913 96350913
96335947 96335948	G11443 G11443	A-1 A-1	G G	6 x 11.04 x 47.5 6 x 11.04 x 47.5	96338200 96338200
96376881 96376980	G11268 G11268	A A	G G	5.99x 11.06 x 40 5.99 x 11.06 x 40	96103034 96103034
90215492 96098751	G2800 G2800	A-1 A-1	G G	7 x 11.03 x 45.8 7 x 11.03 x 45.8	
96182806 96182805	G11268 G11268	A A	G G	5.99x 11.06 x 40 5.99 x 11.06 x 40	96103034 96103034
96230591 96230595	G3511 G3511	F F	G G	6 x 10.05 x 45 6 x 10.05 x 45	90502079 90502079
90220119 90323757	G2800 G2800	A-1 A-1	G G	7 x 11.03 x 45.8 7 x 11.03 x 45.8	
90412277 90410813	G3511 G3511	F F	G G	6 x 10.05 x 45 6 x 10.05 x 45	90502079 90502079
FSO54982 50054982 FSO60609 50060609					
96951454 96951455					

MODEL	YEAR	CC	No. Cyls	IN/ EX	VALVE PART NUMBER	DIMENSIONS	MAT.	SA CG
DAIHATSU								
Move	1999	847	3	In	DHVI666000	34 x 7 x 111.1	C	45-1
				Ex	DHVX666000	28 x 7 x 110.6	C	45-1
Sirion 1.3I 16V YRV 1.0 12v YRV 1.3 16v Terios 1.3I 16V Eng. K3-VE	1999	998 1298	3 4	In	TYVI690000	26 x 5 x 88.2	C	45-1
				Ex	TYVX690000	22.6 x 5 x 89.2	C	45-1
Cuore	1999	997	3	In	DHVI720000	24.5 x 5 x 79.2	P	45-1
				Ex	DHVX720000	20.1 x 5 x 79.8	P	45-1
Sirion	1999	1000	3	In	DHVI720001	24.1 x 5 x 79.5	C	45-1
				Ex	DHVX720000	20.1 x 5 x 79.8	P	45-1
Charade Terios Sportrak Engs. HC,HD	1988 1999 1988	1295 1589	4 4	In	DHVI760000	30 x 6.6 x 112.6	P	45-1
				Ex	DHVX760000	26.1 x 6.6 x 114.5	P	45-1

OE PART NUMBER	VALVE GUIDE PART NUMBER	GUIDE TYPE	MAT.	DIMENSIONS	OE PART NUMBER
13711-87202 13715-87202	G3173 G3173	A-1 A-1	G G	6.99 x 12.06 x 50 6.99 x 12.06 x 50	11124-87701 11124-87701
13711-97401 13711-23030 13715-97401 13715-23030	G11364 G11364	P P	G G	5 x 9.74 x 34.5 5 x 9.74 x 34.5	11122-21010 11122-21010
13711-97205 13715-97203					
13711-87208 13715-87208					
13711-87103 13711-87104 13715-87105 13715-87106					

MODEL	YEAR	CC	No. Cyls	IN/ EX	VALVE PART NUMBER	DIMENSIONS	MAT.	SA CG
FIAT								
126 Engs. 126A1/A2/ AB	1978/94	599	2	In Ex				
127 128 Strada X/19 Engs.127A/A1AB 128A/A1/AC/AS	1974/88	899 1116 1290	4 4 4	In Ex				
Cinquecento Seicento To eng no. 2543170 Panda Punto 55,60,75 Doblo To eng no. 2533527 Engs. 176B2.000 187A1.000	1999	1100 1242	4 4	In Ex	FTVI700000 FTVX700000	31.5 x 7 x 97.1 27.3 x 7 x 97.2	C P	45-1 45-1
Uno 45 Panda 1000S Panda 4x4 Tipo Uno 60 Punto 55 Punto 60 Punto 60SPI Engs. 156.A2/A3 160.A3 176A6	1985 1986 1988 1989 1998	999 1108 1200	4 4 4	In Ex	FTVI700001 FTVX700000	30.4 x 7 x 97 27.3 x 7 x97.2	C P	45-1 45-1
Panda Seicento Eng. 187A.1000 Panda Punto Eng. 188A4000 Doblo Eng. 225A.5000 Natural power	2004 engines	1108 1242	4	In Ex	FTVI700002 FTVX700002	31.9 x 5 x 98.4 27.3 x 5 x 98.7		30-3 30-3
Bravo 80 Stilo 16v Eng. 188.A5, 192B2.000	1999 2001	1242	4	In Ex	FTVI708000 FTVX708000	26.9 x 6 x 95.2 22.4 x 6 x 96	C P	45-3 45-3
Doblo New Punto 1.2ie Eng, 188A4.000 Doblo Eng. 225A5.000 Fr. Eng no's 2533528	2004	1242	4	In Ex	FTVI708001 FTVX708001	31.9 x 5 x 98.4 27.3 x 5 x 98.7	C C	45-3 45-3

OE PART NUMBER	VALVE GUIDE PART NUMBER	GUIDE TYPE	MAT.	DIMENSIONS	OE PART NUMBER
	01-0480 01-0480	A A	G G	8.02 x 14.06 x 59 8.02 x 14.06 x 59	4294108 4294108
	01-0195 01-0195	F F	G G	8.02 x 15.06 x 46.5 8.02 x 15.06 x 46.5	4373602 4373602
46436048 7770334 5942728 7666227 46514754	G3554 G3554	F F	G1 G1	7.03 x 13.04 x 40.4 7.03 x 13.04 x 40.4	7765039 7765039
46406854 5942727 7666228 5942728 7666227 46514754	G2196 G2196	F F	G G	7.03 x 13.04 x 42.5 7.03 x 13.04 x 42.5	4265699 4265699
	GS11425 GS11425	F F	S06 S06	5 x 10.03 x 44 5 x 10.03 x 44	
46403681 46471639	G11069 G11069	F F	G G	6.02 x 10.03 x 39.7 6.02 x 10.03 x 39.7	46441525 46441525
55194993 55194994	G11425 G11425	F F	G G	5 x 10.03 x 44 5 x 10.03 x 44	55190559 55190559

MODEL	YEAR	CC	No. Cyls	IN/ EX	VALVE PART NUMBER	DIMENSIONS	MAT.	SA CG
Uno Turbo Eng. 146A2	1985	1301	4	In Ex				
Grand Punto 1.2ie 8v Eng. 199A4.000 Idea/Doblo Grande Punto 1.4ie 8v Engs. 199A7.000 350A1.000 500 1.2 8v Eng. 169A4.000	2004 2005 2007	1242 1368 1242	4	In Ex	FTVI708002 FTVX708002	33.3 x 5 x 99.9 28.1 x 5 x 100.5		45-3 45-3
Grand Punto 1.2ie 8v Eng. 199A4.000 Idea/Doblo Grande Punto 1.4ie 8v Engs. 199A7.000 350A1.000 500 1.2 8v Eng. 169A4.000 Natural power	2004 2005 2007 engines	1242 1368 1242	4	In Ex	FTVI708003 FTVX708003	33.3 x 5 x 99.9 28.1 x 5 x 100.5		30-3 30-3
Doblo 1.4 ie Idea 1.4 ie Grande Punto Engs. 350A1. 199A4, A7	2005 2006	1242 1368	4 4	In Ex	FTVI708002 FTVX708002	33.3 x 5 x 99.9 28.1 x 5 x 100.5	C C	45-3 45-3
Idea 1.4ie 16v Grande Punto Eng. 188A5, 192B2, 199A6 500 1.4ie 16v Eng. 169A.3.000	2006 2007	1242 1368	4 4	In Ex	FTVI720001 FTVX720001	26.8 x 6 x 95.2 22.5 x 6 x 94.7	C C	45-3 45-3
500 Abarth 1.4 16v Turbo Eng. 199A8.000 Grande Punto Bravo 1.4 16v Turbo Eng. 198A4.000	2008	1368	4	In Ex	FTVI720001 FTVX720002	26.8 x 6 x 95.2 22.4 x 6 x 94.7	C C	45-1 45-1
Brava 1.4 12v Bravo 1.4 12v Engs.182A3/A5	1995	1370	4	In Ex	FTVI820000 FTVX820000	30.5 x 7 x 110.4 35.5 x 7 x 110.4	P P	45-1 45-1
Brava 1.8 16v Bravo 1.8 16v Barchetta 1.8 16v Marea 1.8 16v Coupé 1.8 16 v Stilo 1.8 130Cv Stilo 2.4 20V Engs. 192A2/A4	1998 2001	1747 2387	4 5	In Ex	FTVI820002 FTVX820002	33.6 x 7 x 113.1 27.9 x 7 x 108.5	P P	45-3 45-3

OE PART NUMBER	VALVE GUIDE PART NUMBER	GUIDE TYPE	MAT.	DIMENSIONS	OE PART NUMBER
	G2243 G2243	F F	B1 B1	8.03 x 14.02 x 46.5 8.02 x 14.02 x 46.5	7552897/5997546 7552897/5997546
55194219 55200422	G11425 G11425	F F	G G	5 x 10.03 x 44 5 x 10.03 x 44	55190559 55190559
	GS11425 GS11425	F F	S06 S06	5 x 10.03 x 44 5 x 10.03 x 44	
55191256 55194219 55200422	G11425 G11425	F F	G G	5 x 10.03 x 44 5 x 10.03 x 44	55190559 55190559
55185028 55185080	G11069 G11069	F F	S06 S06	6.02 x 10.03 x 39.7 6.02 x 10.03 x 39.7	46441525 73500256 46441525 73500256
55185028 55206233	G11069 G11069	F F	S06 S06	6.02 x 10.03 x 39.7 6.02 x 10.03 x 39.7	46441525 73500256 46441525 73500256
7712114 46413334	G3531 G11007 G3531 G11007	F F	G1 G1	7.02 x 13.03 x 42.5 13.08 7.02 x 13.03 x 42.5 13.08	7756897 7757052 7756897 7757052
7766564 7766565 60674496	G3531 G11007 G3532 G11008	F F	G1 G1	7.02 x 13.03 x 42.5 13.08 7.02 x 13.03 x 46 13.08	7756897 7757052 7779402

MODEL	YEAR	CC	No. Cyls	IN/ EX	VALVE PART NUMBER	DIMENSIONS	MAT.	SA CG
Bravo 2.0 HGT Marea Coupé Coupé T Eng. 182A1 20v	1995	1998	5	In Ex	FTVI820003 FTVX820003	30 x 7 x 113.1 26.1 x 7 x 108.5	P P	45-3 45-3
Croma Engs. 154A2,C4 154C5	1985/92	1995	4	In Ex Ex				
Tipo ie Tipo ie Coupé Croma Engs. 160A5/A8	1990 1990/93 1993 1992	1756 1995	4 4	In Ex	FTVI840000 FTVX840000	34.5 x 7 x 128 28.5 x 7 x 125.6	P P	45-1 45-1
Brava/Bravo Marea Multipla Palio Stilo Eng 160B6 16v	1999 2001	1581	4	In Ex	FTVI864000 FTVX864000	30.3 x 7 x 102.4 29.9 x 7 x 102.3	C C	45-1 45-1
Ulysse 2.0 Engs. XU10J2C XU10J2TE	1997	1998	4	In Ex	PGVI860001 PGVX860001	42.6 x 8 x 108.8 34.5 x 8 x 108.4	P P	45-3 45-3
Ulysse 2.0 16v Eng. XU10J4R	1997	1998	4	In Ex	PGVI860003 PGVX860003	34.6 x 6 x 106.4 29.6 x 6 x 105.8	P P	45-1 45-1

OE PART NUMBER	VALVE GUIDE PART NUMBER	GUIDE TYPE	MAT.	DIMENSIONS	OE PART NUMBER
60812982 7735898 7735899 46417653 60812981	G3531 G11007 G3532 G11008	F F	G1 G1	7.02 x 13.03 x 42.5 13.08 7.02 x 13.03 x 46 13.08	7756897 7757052 7779402
	G2231 G2231 G2239(Turbo only)	F F F	G1 G1 Cu	8.03 x 14.06 x 42 8.03 x 14.06 x 42 8.02 x 14.02 x 42	4250801 4250801 82399099
7574739 7722907 7574742/7598073 7611673 7650916	G3205 G3206 G3205 G3206	F F	G1 G1	7.02 x 14.03 x 51.3 14.10 7.02 x 14.03 x 51.3 14.10	7616998 7616998
46413806/46517325 46462158/46761369 46461209/46413807 46462159/46761370	G2196 G3532	F F	G G1	7.03 x 13.04 x 42.5 7.02 x 13.03 x 42.5	4265499 46780852
9505936180 9614703280	G3340 G3344	F F	B B	8.01 x 13.07 x 43.5 8.01 x 13.07 x 51	
9628943380 9629861180	G11159 G11159	P P	G G	5.99 x 12.07 x 41 5.99 x 12.07 x 41	

MODEL	YEAR	CC	No. Cyls	IN/ EX	VALVE PART NUMBER	DIMENSIONS	MAT.	SA CG
FIAT DIESEL								
Idea New Punto New Panda Qubo 500 Grande Punto 1.3MJT 16v Engs. 188A.9000 196A.1000 199A.2000/3000	2003 2009 2007 2006	1300	4	In Ex	FTVI730000 FTVX730000	21.9 x 6 x 109.2 21.9 x 6 x 109.2	P P	45-3 45-3
Panda Punto Idea 500 Qubo Grand Punto 1.3MJT 16v Euro 5 diesel	2009	1248	4	In Ex	FTVI730001 FTVX730001	22.45 x 6 x 109.2 22.5 x 6 x 109.2		45-3 45-3
Idea Grand Punto Bravo 1.6 MJT16v Euro 5 diesel 3502A.2000 955A.3000 198A.2000	2008	1598	4	In Ex	ARVI720002 ARVX820001	26.6 x 5 x 114.4 24.5 x 5 x 114.4	P P	45-3 45-3
Scudo 1.6d Eng. DV6	2006	1560	4	In Ex	CTVI750001 CTVX750001	25.6 x 5.5 x 96.4 23.4 zx 5.5 x 96.6	C P	45-3 45-3
Brava/Bravo Marea Punto TD100 Marea TD125 Engs. 182A7/A8 185A2	1998	1910 2387	4 5	In Ex	FTVI820001 FTVX820001	37.5 x 8 x 114.3 31 x 8 x 114.1	P P	45-3 45-3
Brava/Bravo Marea Multipla Punto JTD105 Stilo JTD80/115 Marea JTD130 Engs, 182B4/B9 185A6. 186A6/A8 188A3/A3	2001 1998 2001	1910 2387	4 5	In Ex	FTVI820004 FTVX820004	35.5 x 8 x 115 34.5 x 8 x 115	P P	45-3 45-3

OE PART NUMBER	VALVE GUIDE PART NUMBER	GUIDE TYPE	MAT.	DIMENSIONS	OE PART NUMBER
46518930 55195680	G11310	p	G	6.02 x 10.03 x 43	46816601
46518931	G11310	p	G	6.02 x 10.03 x 43	46816601
55204574	G11310	P	G	6.02 x 10.03 x 43	46816601
55223836	G11310	P	G	6.02 x 10.03 x 43	46816601
55205125	G11481	F-1	G	5 x 10.03 x 46.7	55210016
55207955	G11481	F-1	G	5 x 10.03 x 46.7	55210016
9645024780 9640840080	G11413 G11413	A-1 A-1	G G	5.5 x 9.54 x 34 5.5 x 9.54 x 34	
46527855 7798620 7793225 46527856	G11000 G11018 G11019 01-2409 G11000 G11000 G11000 01-2409	F F	G1 G1	8.02 x 14.03 x 43 14.06 14.11 14.26 8.02 x 14.03 x 43 14.06 14.11 14.26	7565472 7565472
60814605 46750859 60814604 46764378 46783962	G11000 G11018 G11019 01-2409 G11000 G11000 G11000 01-2409	F F	G1 G1	8.02 x 14.03 x 43 14.06 14.11 14.26 8.02 x 14.03 x 43 14.06 14.11 14.26	7565472 7565472

MODEL	YEAR	CC	No. Cyls	IN/ EX	VALVE PART NUMBER	DIMENSIONS	MAT.	SA CG
Croma 1.9 MJT Stilo 1.9 MJT 16v Croma 2.4 MJT 20v Engs. 937A5, 939A1, 939A3	2006 2004 2006	1910 2387	4 5	In Ex	ARVI820000 ARVX820000	27.8 x 6 x 114.4 25.8 x 6 x 114.4	P P	45-3 45-3
Croma 1.9MJT Stilo 1.9MJT Engs. 937A.5000 939A.1000 Bravo 2.0MJTD Eng. 198A.5000	7/2006 2009	1910 1956	4	In Ex	ARVI820001 ARVX820001	28 x 5 x 114.4 Ret to S/E 4.9mm 24.5 x 5 x 114.4 Ret to S/E 5.9mm		45-3 45-3
Croma 2.4JTDM Eng. 939A3.000 From engine no. 5553218	7/2006	2387	5	In Ex	ARVI820001 ARVX820001	28 x 5 x 114.4 Ret to S/E 4.9mm 24.5 x 5 x 114.4 Ret to S/E 5.9mm		45-3 45-3
Croma 2.4JTDM Eng. 939A3.000 To engine no. 5553217	2005-6/2006	2387	5	In Ex	ARVI820002 ARVX820002	28 x 5 x 114.4 Ret to S/E 5.8mm 24.5 x 5 x 114.4 Ret to S/E 6.5mm		45-3 45-3
Fiorino D Regata, Weekend Uno 60D Tipo 1.7D Punto 1.7D/DS/TD Regata D/TD Tempra Tipo TD1.9TDS Tempra TD Ducato 1.9D/TD Brava/Bravo 1.9D Punto TD60/TD70 Engs. 149B3/B4 149A1/B1. 160A6/A7 280A1	1986 1993 1984/88 1990 1988 1990 1990 1995 1999	1697 1929	4 4	In Ex	FTVI826000 FTVX826000	37.4 x 8 x 116.6 33.5 x 8 x 116.6	P P	45-1 45-1

OE PART NUMBER	VALVE GUIDE PART NUMBER	GUIDE TYPE	MAT.	DIMENSIONS	OE PART NUMBER
46802049 55195535 46787902 55190249	G11302 G11302	F F	S06 S06	6.02 x 11.03 x 47 6.02 x 11.03 x 47	55186786 55186786
55206431 55205183 55207955	G11481 G11481	F-1 F-1	G G	5 x 10.03 x 46.7 5 x 10.03 x 46.7	55210016 55210016
55206431 55205183 55207955	G11481 G11481	F-1 F-1	G G	5 x 10.03 x 46.7 5 x 10.03 x 46.7	55210016 55210016
55190248 55190249	G11481 G11481	F-1 F-1	G G	5 x 10.03 x 46.7 5 x 10.03 x 46.7	55210016 55210016
5990532 7547158 5990533 7588577	G2828 A149A1 G2265 A149B1/ A160A6/A160A7 G2235 A149B3/B4 G2828 A149A1 G2265 A149B1/ A160A6/A160A7 G2235 A149B3/ B4	F F F F F F	G G1 G G G1 G	8.03 x 15.03 x 59.5 8.03 x 14.06 x 46.5 8.03 x 14.06 x 46.5 8.03 x 15.03 x 59.5 8.03 x 14.06 x 46.5 8.03 x 14.06 x 46.5	4354245 4250803 4354245 4250803

MODEL	YEAR	CC	No. Cyls	IN/ EX	VALVE PART NUMBER	DIMENSIONS	MAT.	SA CG
Ulysse Scudo XUD9/XUD9TF	1998	1905	4	In Ex	PGVI830001 PGVX830001	38.4 x 8 x 112.5 32.9 x 8 x 111.8	P P	45-1 45-1
Ulysse 2.0JTD Eng. DW10TE	1999	1997	4	In Ex	PGVI850000 PGVX850000	35.6 x 6 x 107.1 33.8 x 6 x 107.1	P P	45-3 45-3
Ulysse 2.0MJTD 16v Eng. RHR/RHK Ulysse 2.2JTD 16V Eng. 4HW	2006 2001	1997 2179	4	In Ex	PGVI850002 PGVX850002	29.8 x 6 x 105 25 x 6 x 105	P P	45-3 45-3
Ulysse 2.0JTD 16v Scudo 2.0JTD 16v Eng. DW10ATED	2000 2001	1997	4	In Ex	PGVI850003 PGVX850003	29.9 x 6 x 106.2 25 x 6 x 106.1	P P	45-3 45-3
Ducato 2.2JTD 4HV	2006	2198	4	In Ex	FDVI860002 (FTVI860000) FDVX860002 (FTVX860000)	29.8 x 7 x 122.3 25.8 x 7 x 122.1		30-3 45-3
Daily 2.3 Unijet Ducato 2.3JTD 16v Eng. F1AE481B	2006	2287	4	In Ex	FTVI880000 FTVX880000	30 x 6 x 120.4 30 x 6 x 120.35		45-3 45-3
Croma D/TD Ducato Daily Engs. 8140.21/23/27/43/ 47/61/67/91/97 inc. 8144 versions	1984 1986 1986	2445 2499 2799	4 4 4	In Ex Ex	FTVI930000 FTVX930000 FTVX930002	41 x 8 x 121 34.5 x 8 x 122 36 x 8 x 122	P P P	30-1 45-1 45-1
New Daily New Ducato Maxi 8140.47/63	1990	2499	4	In Ex	FTVI930001 FTVX930001	43.4 x 8 x 121.8 36.6 x 8 x 121.9	P P	30-1 45-1
Ducato 3.0JTD 16v Eng. F1CE0481A	2006	2998	4	In Ex	FTVI958000 FTVX958000	32.4 x 6 x 120 32.4 x 6 x 119.95		30-3 30-3

OE PART NUMBER	VALVE GUIDE PART NUMBER	GUIDE TYPE	MAT.	DIMENSIONS	OE PART NUMBER
9601136380 9351036580 9613736280	G3528 G3528	F F	B B	8.02 x 14.05 x 48 8.02 x 14.05 x 48	
9624774280 9624774580	G11396 G11396	F F	G G	6 x 12.06 x 42.5 6 x 12.06 x 42.5	
9627184380 9683321080 9634437580	G11319 G11319	A-1 A-1	G G	6 x 10.06 x 41.5 6 x 10.06 x 41.5	9640340380 9640340380
9635317980 9635318480	G11319 G11396 G11319 G11396	A-1 A-1	G G G G	6 x 10.06 x 41.5 6 x 12.06 x 42.5 6 x 10.06 x 41.5 6 x 12.06 x 42.5	9640340380 9640340380
9660640080 9660640080	G11459 G11460 G11459 G11460	A-1 A-1 A-1 A-1	G G G G	6.96 x 12.06 x 51.5 6.96 x 12.10 x 51.5 6.96 x 12.06 x 51.5 6.96 x 12.10 x 51.5	
504069199 500362856	G11388 G11388	F F	G G	6 x 10.05 x 49 6 x 10.05 x 49	500388426 500388426
4757358 7301820 4826033 7301821 7302157 7303309 99432837	G2713 G2269 (8144-91) G2713 G2269 (8144-91) G2713 G2269 (8144-91)	F A F A F A	G1 G1 G1 G1 G1 G1	8.03 x 13.03 x 56 8.03 x 13.03 x 60 8.03 x 13.03 x 56 8.03 x 13.03 x 60 8.03 x 13.03 x 56 8.03 x 13.03 x 60	4749395 4726483 4749395 4726483 4749395 4726483
98468338 98418161	G2713 G2713	F F	G1 G1	8.03 x 13.03 x 56 8.03 x 13.03 x 56	4749395 4749395
504072531 504081062	G11388 G11388	F F	G G	6 x 10.05 x 49 6 x 10.05 x 49	500388426 500388426

MODEL	YEAR	CC	No. Cyls	IN/ EX	VALVE PART NUMBER	DIMENSIONS	MAT.	SA CG
FIAT-IVECO								
Eurocargo 60E10/E12 65E10/E12 75E12 60/65/75E14 Zeta 35/40NC 50/55/65/70/75NC 50.8/50.9/60.8 Engs. 8040.02/04/05/25/45	1991 1966/71 1970 1971	3400 3600 3900	4 4 4	In Ex				
Eurocargo 80E15/e21 100E15/E18/E21 120E15 130E15/E18 135E18 150E15/E18 170E18 180E18/E21 Zeta 79.13/79.14 95.14/109.14 645/650/655N1/2 Engs. 8060.02/04/05/25/45	1991 1979/91 1960/71	5100 5800	6 6	In Ex				
Eurotech/ Eurotrakker 190/260/400/440-E24/E27/E31/E35 Engs. F2BE0681A/B/C/D	9/1998	7800	6	In Ex				
Eurostar/Eurotech 190/260/440E39-E40-E43 Engs.F3aE0681B/D/E	11/1999	10300	6	In Ex				
Eurotrakker 190/260/340E38-E44 Stralis 260/440-S54 Engs.F3BE0681A/C/E/G	9/2000 02/2002	12800	6	In Ex				

OE PART NUMBER	VALVE GUIDE PART NUMBER	GUIDE TYPE	MAT.	DIMENSIONS	OE PART NUMBER
	G2298	A	G	8.03 x 14.04 x 56	4802126
	G2298	A	G	8.03 x 14.04 x 56	4802126
	G2298	A	G	8.03 x 14.04 x 56	4802126
	G2298	A	G	8.03 x 14.04 x 56	4802126
	G11407	F	S01	8.02 x 13.03 x 75.5	500391440
	G11409	F6	S01	8.02 x 13.03 x 75.5	500391436
	G11338	F	S01	9.02 x 15.03 x 97	500391479
	G11339	F6	S01	9.02 x 15.03 x 97	500391476
	G11340	F	S01	10.02 x 16.03 x 97	500390993
	G11341	F6	S01	10.02 x 16.03 x 97	500390994

MODEL	YEAR	CC	No. Cyls	IN/ EX	VALVE PART NUMBER	DIMENSIONS	MAT.	SA CG
FORD								
Fiesta 1.0/1.1 Escort 1.1 Eng. HCS	1989	999 1119	4 4	In Ex	FDVI687000 FDVX687000	33 x 7 x 104 29 x 7 x 104.4	C P	45-3 45-3
Fiesta 1.3 Escort 1.3 KA, KA Z Eng. HCS	1989	1299	4	In Ex	FDVI740000 FDVX687000	34.5 x 7 x 104 29 x 7 x 104.4	C P	45-3 45-3
Fiesta 1.25 Eng. Zetec-SE Single collet	1995	1242	4	In Ex	FDVI720000 FDVX720000	26.1 x 6 x 97.7 22.2 x 6 x 99.7	C P	45-1 45-1
Fiesta 1.25 Eng. Zetec-SE Three collet	1995	1242	4	In Ex	FDVI720001 FDVX720001	26.1 x 6 x 97.9 22.1 x 6 x 99.7	C C	45-3 45-3
Fiesta 1.25 Engs. M7JA/ M7JB/FUJA/ FUJB	2002	1242	4	In Ex	FDVI720002 FDVX720002	26 x 6 x 99.7 22.1 x 6 x 101.7	C C	45-3 45-3
Ka, Fiesta Fusion 8v OHC	2002	1299	4	In Ex	FDVI739600 FDVX739600	35.1 x 6 x 109.6 29.7 x 6 x 109.8		45-3 45-3
Escort OHV Fiesta OHV	1982/89	1117	4	In Ex				
Escort Fiesta Orion 1.3 CVH	1981	1295	4	In Ex	FDVI800002A FDVX740002A	42 x 8 x 135 34 x 8 x 131.5		45-3 45-3
Escort Fiesta Mondeo Eng. Zetec 16v Single collet Standard Hydraulic lifter	1992 on to 8/1995 to 5/1998	1597	4	In Ex	FDVI760000 FDVX760000	26 x 6 x 97.1 24.5 x 6 x 96.7	P P	45-1 45-1
Escort Fiesta Mondeo Eng. Zetec 16v Three collet Standard Hydraulic lifter	1992 on to 8/1995 to 5/1998	1597	4	In Ex	FDVI760001 FDVX760001	26 x 6 x 97.1 24.5 x 6 x 96.7	C C	45-3 45-3
Fiesta 1.4 Puma 1.4 Eng. Zetec-SE 16v	1995-01	1388	4	In Ex	FDVI760002 FDVX760002	28.1 x 6 x 97.4 24.1 x 6 x 99.4	C P	45-1 45-1

OE PART NUMBER	VALVE GUIDE PART NUMBER	GUIDE TYPE	MAT.	DIMENSIONS	OE PART NUMBER
6165227 89BM6507AA 1653978 89BM6505CA					
89BM6507BA 6165228 74TM6507AB 89BM6505CA 1653978/1038606					
1004446 4004444	G11221 G11221	A A	G G	6.00 x 11.05 x 39 6.00 x 11.05 x 39	
97MM6507A2B 98MM6505A2A	G11221 G11221	A A	G G	6.00 x 11.05 x 39 6.00 x 11.05 x 39	
1207533 1320928 1113187	G11221 G11221	A A	G G	6.00 x 11.05 x 39 6.00 x 11.05 x 39	
1144340 1144339					
	01-1940 01-1940	F F	G G	7.89 x 12.75 x 54 7.89 x 12.75 x 54	
81SM6507KF 81SM6505AF	G2882 G2882	F F	G G	8.07 x 13.56 x 65 8.07 x 13.56 x 65	81SM6501LC 81SM6501LC
6742921 928M6507C1A/C2A 7314594-9 948M6505A2A	G3520 G3520	A A	G1 G1	6.08 x 12.03 x 36 6.08 x 12.03 x 36	
6742922 1041830 1033898	G3520 G3520	A A	G1 G1	6.08 x 12.03 x 36 6.08 x 12.03 x 36	
1012749 1012747	G11221 G11221	A A	G G	6.00 x 11.05 x 39 6.00 x 11.05 x 39	

MODEL	YEAR	CC	No. Cyls	IN/ EX	VALVE PART NUMBER	DIMENSIONS	MAT.	SA CG
Focus 1.4 16v Fiesta 1.4 16v Eng. Zetec-S Uses variable size lifter & shim	1998	1388	4	In Ex	FDVI760003 FDVX760003	28.1 x 6 x 97.4 24.1 x 6 x 99.4	C P	45-3 45-3
Fiesta 1.4 16v Zetec Eng. FXJA, FXJB FXJAA, FXJAB Uses variable size lifter & shim	2001	1388	4	In Ex	FDVI760006 FDVX760005	28 x 6 x 99.4 24.1 x 6 x 101.5	C C	45-3 45-3
Fiesta 1.6 Focus 1.6 Puma 1.6 Zetec-S 16v Uses variable size lifter & shim	5/98-12/00 5/98-10/00 5/98-7/00	1596	4	In Ex	FDVI760004 FDVX760003	30 x 6 x 96.9 24.1 x 6 x 99.4	C P	45-3 45-3
Fiesta 1.6 Focus 1.6 C-Max 1.6 Fusion Puma Zetec-S 16v Uses variable size lifter & shim	01/2001- 11/2000- 2004 08/2002 08/2000	1596	4	In Ex	FDVI760005 FDVX760005	30 x 6 x 99 24.1 x 6 x 101.5	C C	45-3 45-3
StreetKa 8v Zetec-rocam	2002	1597	4	In Ex	FDVI760007 FDVX760007	40 x 6 x 109.7 34 x 6 x 109.8	C C	45-3 45-3
Fiesta VI 1.4 16v Bi-fuel	2009	1388	4	In Ex	FDVI760008 FDVX760008	28.1 x 6 x 99.4 24.13 x 6 x 101.4		45-3 45-3
Escort Fiesta Orion 1.4 CVH	1986	1392	4	In Ex	FDVI772400A FDVX772400A	40 x 8 x 136.5 34 x 8 x 133		45-3 45-3
Mondeo Zetec-E 16v Solid lifter & variable size shim	5/9810/00	1596	4	In Ex	FDVI790000 FDVX790000	27 x 6 x 98.2 24.5 x 6 x 97.7	C C	45-3 45-3
Sierra 1.8 CVH	1989	1769	4	In Ex	FDVI800000 FDVX800000	39 x 8 x 136.7 34 x 8 x 134	C C	45-3 45-3

OE PART NUMBER	VALVE GUIDE PART NUMBER	GUIDE TYPE	MAT.	DIMENSIONS	OE PART NUMBER
1051773 1069529 1101934	G11221 G11221	A A	G G	6.00 x 11.05 x 39 6.00 x 11.05 x 39	
1151997 1113189 1S6C6505BA	G11221 G11221	A A	G G	6.00 x 11.05 x 39 6.00 x 11.05 x 39	
1072048 98MM6507C2B 1101934 X56G6505B2A	G3499 G3499	P P	G G	6.01 x 11.04 x 40.5 6.01 x 11.04 x 40.5	
1122364 1S4G6507CA 1320927 1113189 1S6C6505BA	G3499 G3499	P P	G G	6.01 x 11.04 x 40.5 6.01 x 11.04 x 40.5	
1127416 1089830					
1673829 1673827					
86SM6507AA 6137194 86SM6505AD 6162460	G2882 G2882	F F	G G	8.07 x 13.56 x 65 8.07 x 13.56 x 65	81SM6501LC 81SM6501LC
1053844 1053842 1066044 1124512	G3499 G3499	P P	G G	6.01 x 11.04 x 40.5 6.01 x 11.04 x 40.5	
E7EE6507B2A E7FZ6507A E7EE6505B2C E7FZ6505A	G2882 G2882	F F	G G	8.07 x 13.56 x 65 8.07 x 13.56 x 65	81SM6510LC 81SM6510LC

MODEL	YEAR	CC	No Cyls	IN/ EX	VALVE PART NUMBER	DIMENSIONS	MAT.	SA CG
Puma 1.7 16v	1999	1679	4	In	FDVI800001	30 x 6 x 96.2	C	45-1
				Ex	FDVX800001	26 x 6 x 98.3	P	45-1
Escort CVH Fiesta CVH Orion CVH	1981	1596	4	In	FDVI800002A	42 x 8 x 135	C	45-3
				Ex	FDVX800002A	37 x 8 x 132	C	45.3
Focus 1.8 16v Focus 2.0 16v Mondeo 1.8 16v Mondeo 2.0 16v Eng. Zetec E Duratec-HE Solid lifter & variable size shim	5/1998-2000	1796 1989	4 4	In	FDVI806000	33 x 6 x 98	C	45-3
				Ex	FDVX806000	28 x 6 x 97.7	C	45-3
Capri Cortina Escort Crossflow 711/751M	1967	940 1098 1298 1599	4 4 4 4	In Ex				
Galaxy 2.8 VW VR6	1998	2792	V6	In	ADVI810010	39 x 7 x 106	P	45-3
				Ex	ADVX810010	34.2 x 7 x 107	P	45-3
Cougar Mondeo Duratec V6	1999 1994	2495 2544	V6 V6	In	FDVI824000	32 x 6 x 114.8	P	45-3
				Ex	FDVX824000	26 x 6 x 115.8	C	45-3
Focus C-Max Transit Connect Mondeo Eng. Duratec-HE	2004	1798	4	In	FDVI830000	32.5 x 5.5 x 103.4	C	45-1
				Ex	FDVX830000	28 x 5.5 x 104.6	C	45-1
Focus ST Mondeo Turbo S-Max Turbo Eng. HUWA	2007	2521	5	In	FDVI830001	31 x 6 x 104.3		45-3
				Ex	FDVX830001	27 x 6 x 103.3		45-3
Probe 16v Eng. FS	1993	1991	4	In	MZVI830000	31.5 x 6 x 89.8	C	45-1
				Ex	MZVX830000	27.6 x 6 x 90	P	45-1
Probe 24v Eng. KL	1993	2495	V6	In	MZVI845000	32 x 6 x 94	C	45-1
				EX	MZVX845000	27.6 x 6 x 95	C	45-1
Cougar Escort Fiesta Mondeo Eng. Zetec Single collet Standard hydraulic lifter	1998 1991 1992 1991	1796 1998	4 4	In	FDVI848000	32 x 6 x 97.1	C	45-1
				Ex	FDVX848000	28 x 6 x 96.7	C	45-1

OE PART NUMBER	VALVE GUIDE PART NUMBER	GUIDE TYPE	MAT.	DIMENSIONS	OE PART NUMBER
1031008 1031007					
81SM6507KF 81SM6505AG	G2882 G2882	F F	G G	8.07 x 13.56 x 65 8.07 x 13.56 x 65	81SM6501LC 81SM6501LC
1053845 1053843 1066045	G3520 G3520	A A	G1 G1	6.08 x 12.03 x 36 6.08 x 12.03 x 36	
	01-1921 01-1921	A A	G G	7.91 x 11.16 x 60.3 7.91 x 11.16 x 60.3	
10044128 1072283 1031317 1031316 1004127	G3504 G3504	B B	G G	7 x 12.07 x 38 7 x 12.07 x 38	7402396 7402396
7221531 7221529					
1324691 1324690	G11427 G11427	A-1 A-1	G G	5.5 x 11.05 x 39 5.5 x 11.05 x 39	
1369828 1369831	G11371 G11447 G11371 G11447	F F F F	G G G G	45 x 6 x 11.99 39.5 x 6 x 11.52 45 x 6 x 11.99 39.5 x 6 x 11.52	
FS01-12111B FS01-12121A					
KL01-12111A KL01-12121					
928M6507D1A 6640543 6640511-8 948M6505B2A 6640542 6911483 1023593-3	G3520 G3520	A A	G1 G1	6.08 x 12.03 x 36 6.08 x 12.03 x 36	

MODEL	YEAR	CC	No. Cyls	IN/ EX	VALVE PART NUMBER	DIMENSIONS	MAT.	SA CG
Cougar Escort/Fiesta Mondeo Eng. Zetec Three Collet Standard hydraulic lifter	1998 1991 1992 1991	1796 1998	4 4	In Ex	FDVI848001 FDVX848001	32 x 6 x 97.1 28 x 6 x 96.7	C C	45-3 45-3
Focus ST170 16v Eng. ALDA	2002- 2004	1988	4	In Ex	FDVI848002 FDVX848002	33.5 x 6 x 102.85 28 x 6 x 102.35		45-3 45-3
Granada Scorpio Sierra Galaxy DL20H DOHC	1989 1994 1989 06/1995	1998	4	In Ex	FDVI860000 FDVX860000	42.6 x 7 x 108.5 38 x 7 x 109	C P	45-3 45-3
Escort XR3i Escort RS2000 Galaxy Transit Eng. DOHC 16v	1990 1991 1998	1993 2295	4 4	In EX	FDVI860001 FDVX860001	33.5 x 7 x 111.9 30 x 7 x 111.6	C P	45-3 45-3
Focus Focus C-Max Mondeo Mk3/Mk4 Eng. Duratec-HE 16v	2004 2000	1999	4	In Ex	FDVI875000 FDVX875000	35 x 5.5 x 103.4 30 x 5.5 x 104.6	C P	45-1 45-1
Capri Cortina Escort Scorpio Sierra Transit 1.6 OHC	1971 1976 1982 1972	1599	4	In Ex				
Capri Cortina Escort Scorpio Sierra Transit 2.0 OHC(Pinto)	1971 1976 1982 1972	1993	4	In Ex	FDVI908000 FDVX908000	42 x 8 x 111.15 36 x 8 x 110.5	C C	45-3 45-3
Escort Cosworth Sierra Cosworth Eng, N5B	1986	1993	4	In Ex	FDVI908001 FDVX908001	35 x 7 x 105.6 31 x 8 x 105.8		45 45
Granada Scorpio Enga. BOA, BOB 24v	1991	2935	V6	In Ex	FDVI930000 FDVX930000	34 x 7 x 105.5 30 x 7 x 104	P P	45-3 45-3
Granada Scorpio Sierra TV23/TV28	1974/86	2294 2792	V6 V6	In Ex				
Capri, Consul Corsair, Granada Zephyr, Zodiac Eng. Essex	1966/77	1663 1996 2494 2994	V6 V6 V6 V6	In Ex				

OE PART NUMBER	VALVE GUIDE PART NUMBER	GUIDE TYPE	MAT.	DIMENSIONS	OE PART NUMBER
928M6507F2A 1033899 928M6505D2A	G3520 G3520	A A	G1 G1	6.08 x 12.03 x 36 6.08 x 12.03 x 36	
1143059 1143057					
88WM6507BA 95WM6507AA 7078139 88WM6505DA/EA 95WM6505AA 7078136	G3407 G3407	F F	G1 G1	7 x 13.56 x 43 7 x 13.56 x 43	6172956 6172956
91XM6507AC 7076363 91XM6505AB 6576229	G3407 G3407	F F	G1 G1	7 x 13.56 x 43 7 x 13.56 x 43	6172956 6172956
1124378 1124377	G11427 G11427		G G	5.5 x 11.05 x 39 5.5 x 11.05 x 39	
	01-1941 01-1942	G G	F F	8.04 x 12.75 x 53.3 8.07 x 12.75 x 53.3	
70HM6507DD 6063961 70HM6505DE 6048949	01-1944 01-1945	G G	F F	8.04 x 12.75 x 60.3 8.06 x 12.75 x 60.3	
	G3195 G3195	F1 F1	B B	7 x 13.06 x 43 8 x 13.06 x 43	
919M6507AA 919M6505AA					
	01-1943 01-1943	F F	G G	8.02 x 12.75 x 56 8.02 x 12.75 x 56	
	01-1946 01.1946	F F	G G	7.91 x 12.75 x 53.3 7.91 x 12.75 x 53.3	

MODEL	YEAR	CC	No. Cyls	IN/ EX	VALVE PART NUMBER	DIMENSIONS	MAT.	SA CG
FORD DIESEL								
Ka 1.3TDCi Eng. MJT	2009	1242	4	In In Ex	FTVI730000 FTVI730001 FTVX730000	21.9 x 6x 109.2 22.45 x 6 x 109.2 21.9 x 6 x 109.2		45-3 45-3 45-3
Focus Focus C-Max TDCi Eng. G8DA / DB16v	2004	1560	4	In Ex	CTVI750001 CTVX750001	25.6 x 5.5 x 96.4 23.4 x 5.5 x 96.6	P P	45-3 45-3
C-Max 1.6TDCi Fiesta 1.6TDCi Focus 1.6TDCi S-Max 1.6TDCi Engs. TJZA/ZB	2010	1560	4	In Ex	CTVI750003 CTVX750003	30.2 x 5.5 x 95.5 27.5 x 5.5 x 95.5	P P	45-1 45-1
Fiesta Fusion Duratorq TDCi 8v Eng. F6JA/F6JB	2003	1399	4	In Ex	PGVI770000 PGVX770000	32.8 x 5.5 x 97.3 30.3 x 5.5 x 97.3	C P	45-3 45-3
Galaxy Engs. 1Z, AHU, AFN	1995/96	1896	4	In Ex	ADVI795001 ADVX795001	36 x 8 x 96.9 31.5 x 8 x 96.9	P P	45-3 45-3
Galaxy 1.9TDi. Engs. 1Z, AHU, AFN	05/1996-2000	1896	4	In Ex	ADVI795002 ADVX795002	36 x 7 x 96.9 31.4 x 7 x 96.9	P P	45-3 45-3
Galaxy 1.9TDi. Engs. ANU, AUY, ASZ	2000	1896	4	In Ex	ADVI795003 ADVX795003	36 x 7 x 89.9 31.5 x 7 x 89.9	P P	45-3 45-3
Escort Fiesta Orion N/Aspirated	1989	1753	4	In Ex	FDVI825000 FDVX825000	36.5 x 8 x 107.1 32 x 8 x 109.2	P P	45-3 45-3
Galaxy 2.0TDCi Kuga 2.0TDCi Mondeo 2.0TDCi S-Max 2.0TDCi Engs. AZWA QXWA-QXWB	2006 2008 2006 2006	1997	4	In Ex	PGVI850002 PGVX850002	29.8 x 6 x 105 25 x 6 x 105	P P	45-3 45-3
Mondeo 2.2TDCi S-Max 2.2TDCi ENG. Q4AB	2008	2179	4	In Ex	PGVI850004 PGVX850004	27.2 x 6 x 95.8 25 x 6 x 95		45-3 45-3
Escort TD Fiesta TD Mondeo TD Orion TD Sierra TD	1989 1991 1989	1753	4	In Ex	FDVI825001 FDVX825001	36.5 x 8 x 107.1 32 x 8 x 109.2	P P	45-3 45-3

OE PART NUMBER	VALVE GUIDE PART NUMBER	GUIDE TYPE	MAT.	DIMENSIONS	OE PART NUMBER
	G11310 G11310 G11310	A-1 A-1 A-1	G G G	43 x 6.02 x 10.03 43 x 6.02 x 10.03 43 x 6.02 x 10.03	
1229882 1229883	G11413 G11413	A1 A1	G G	5.5 x 9.54 x 34 5.5 x 9.54 x 34	
1685847 1685845	G11413 G11413	A1 A1	G G	5.5 x 9.54 x 34 5.5 x 9.54 x 34	
1145933 1152191 1145932 1152190	G11413 G11413	A1 A1	G G	5.5 x 9.54 x 34 5.5 x 9.54 x 34	
1669766 1669772	G2664 G2664	G G	B B	8 x 12.06 x 36.5 8 x 12.06 x 36.5	
1079769 1049788	G3593 G3593	G G	B B	6.98 x 12.06 x 36.5 6.98 x 12.06 x 36.5	1037143 1037143
1100679 1100678	G3593 G3593	G G	B B	6.98 x 12.06 x 36.5 6.98 x 12.06 x 36.5	1037143 1037143
89FF6507AA 6781621 6781619 89FF6505AA 6172845 6172848	G11325 G11325	F F	G G	8.01 x 12.76 x 38 8.01 x 12.76 x 38	7402396 7402396
1231931 1231930	GS11319 GS11396 GS11319 GS11396	A-1 F A-1 F	SO6 SO6 SO6 SO6	41.5 x 6 x 10.06 42.5 x 6 x 12.06 41.5 x 6 x 10.06 42.5 x 6 x 12.06	
	GS11319 GS11319	A-1 A-1	SO6 SO6	41.5 x 6 x 10.06 41.5 x 6 x 10.06	
93FF6507AA/AF 1078433 93FF9505AA	G11325 G11325	F F	G G	8.01 x 12.76 x 38 8.01 x 12.76 x 38	7402396 7402396

MODEL	YEAR	CC	No. Cyls	IN/ EX	VALVE PART NUMBER	DIMENSIONS	MAT.	SA CG
Focus TDCi/TDDi Mondeo TDi Transit Connect Engs. Endura, Lynx, Duratorq FFDA,BHDA,BHDB	1998 1998 2001	1753	4	In Ex	FDVI825001 FDVX825002	36.5 x 8 x 107.1 32 x 8 108.7	P P	45-3 45-3
Focus Focus C-Max TDCi G6DA/G6DC	2003	1997	4	In Ex	PGVI850002 PGVX850002	29.9 x 6 x 105 25 x 6 x 105	P P	45-3 45-3
Mondeo TDCi New Transit 2.0TD Eng, Duratorq HUBA/B/C D5BA/D6BA FMBA/N7BA	2000 2000	1998 2198	4 4	In Ex	FDVI860002 FDVX860002	29.8 x 7 x 122.2 25.8 x 7 x 122.2	P P	30-3 45-3
New Transit 330/350 Eng.Duratorq D2FA,/D2FE/ D4FA/D4FA/ D0FA	2001	2402	4	In Ex	FDVI899000 FDVX899000	31.3 x 7 x 122.2 27.7 x 7 x 122.2	P P	30-3 45-3
Granada Scorpio Eng. VM-TD	1996/99	2498	4	In Ex	VMVI920000 VMVX920000	40.1 x 8 x 121 33.9 x 8 x 121	P P	35-1 45-1
Ranger 2.5 TDi Eng. WL-T 12v	1998	2500	4	In Ex	MZVI930000 MZVX930000	32.7 x 7 x 111.8 35.6 x 7 x 111.8	P P	45-1 45-1
Ranger 16v TDi 2.5 3.0	2006 2005	2499 2978	4	In Ex	MZVI930001 MZVX930001	31 x 6 x 112 28 x 6 x 111.9	P P	45-1 45-1
Transit Di N/Asp. & Turbo	1984	2496	4	In Ex	FDVI936700 FDVX936700	42 x 9 x 124.5 36.3 x 9 x 123.9	P P	30-3 45-3
Maverick Eng. TD27T	1990	2663	4	In Ex	NSVI960000 NSVX960000	43.5 x 8 x 117 38 x 8 x 117	P P	45-1 45-1
A Series 409, 509, 609, 709 York diesel	1973	3498	6	In Ex				
Tractor 32D, 40D, PD	1964	2500 2800 3200 6500	3 3 3 6	In Ex				

OE PART NUMBER	VALVE GUIDE PART NUMBER	GUIDE TYPE	MAT.	DIMENSIONS	OE PART NUMBER
93FF6507AA/AF 1078433 1078429 1198044 1352129	G11325 G11325	F F	G G	8.01 x 12.76 x 38 8.01 x 12.76 x 38	7402396 7402396
1231931 1231930	GS11396 GS11396	F F	S06 S06	6 x 12.06 x 42.5 6 x 12.06 x 42.5	
1216915 1121331/332/333 1132466 1214456	G11459 G11460 G11459 G11460			6.96 x 12.06 x 51.5 6.96 x 12.10 x 51.5 6.96 x 12.06 x 51.5 6.96 x 12.10 x 51.5	
1096250 1096248	G11459 G11460 G11459 G11460			6.96 x 12.06 x 51.5 6.96 x 12.10 x 51.5 6.96 x 12.06 x 51.5 6.96 x 12.10 x 51.5	
V94DD-6507AA V94DD-6505AA	G3126 G3126	A A	G G	8 x 14.07 x 55 8 x 14.07 x 55	
3595890 3595885					
1449108 1449109					
894F6507A1B 894F6505A1B	G2886 G2886	A-1 A-1	G G	8.98 x 14.74 x 56.6 8.98 x 14.74 x 56.6	844F6510CA 844F6510CA
	G3564 G3564	A-2-6 A-2-6	G G	8 x 12.04 x 47 8 x 12.04 x 47	
	01-0829 01-1971	A1 A1	G G	8.98 x 14.74 x 61.5 8.98 x 14.74 x 58	715F6510ABA 715F6510ACA
	01-1947 01-1947	A A	G G	9.42 x 12.75 x 78.7 9.42 x 12.75 x 78.7	

MODEL	YEAR	CC	No. Cyls	IN/ EX	VALVE PART NUMBER	DIMENSIONS	MAT.	SA CG
HONDA Ballade Civic Integra	1983/87	1335 1488	4 4	In Ex				
Ballade Civic Integra	1974/82	1488	4	In Ex				
Jazz 1.2 DSi Jazz 1.4 DSi Engs. L12A, L13A	2003	1246 1339	4	In Ex	HDVI730000 HDVX730000	32 x 5.5 x 118.3 28 x 5.5 x 118	C C	45-1 45-1
Civic 16v Eng. D16A	1988	1590	4	In Ex	HDVI750000 HDVX750000	30 x 6.5 x 105.3 27 x 6.5 x 104.5	C C	45-1 45-1
Civic 16v Engs. D15B/D16A SOHC/DOHC	1988	1493 1596	4 4	In Ex	HDVI750001 HDVX750001	29 x 5.5 x 115 25 x 5.5 x 118.7	C C	45-1 45-1
Civic 1.6 V-tec CRX 1.6 VTi Civic 1.8 VTi	1989	1590 1797	4 4	In Ex	HDVI750002 HDVX750002	33 x 5.5 x 102.3 27.9 x 5.5 x 102.3	C C	45-1 45-1
Civic 1.4 Civic 1.5VX V-tec Civic 1.5 LS Civic 1.6SR, Cvt Accord LS HR-V 1.6	1992	1396 1500 1590	4 4 4	In Ex	HDVI750003 HDVX750003	27.4 x 5.5 x 120 23.4 x 5.5 x 117.5	C C	45-1 45-1
CRX 1.6 Civic EX/Exs Civic 1.6Si Civic 1.4 Civic 1.6 V-tec Logo 1.3 Stream 1.7 Engs. D16Z6/ Z7,D13B7, D14Z6, D17A2	>12/95 2000 1999 2001	1590 1396 1343 1668	4 4 4 4	In Ex	HDVI750004 HDVX750004	30 x 5.5 x 118.7 26 x 5.5 x 116	C C	45-1 45-1
Civiv V-Tec 16v FRV V-Tec 16v Eng. RA18A1/A2	2006 2005	1799	4	In Ex	HDVI750005 HDVX750004	32 x 5.5 x 116.7 26 x 5.5 x 116	C C	45-1 45-1
Civic V Eng. B18C1	1996/01	1797	4	In Ex				
CR-V 2.0 Engs. B20B/B20Z	1998	1973	4	In Ex	HDVI840000 HDVX840000	31.1 x 6.5 x 105.6 28.1 x 6.5 x 106	C C	45-1 45-1
Accord 1.8/2.0 2.2 V-tec Shuttle 2.3 Engs. F18B2, F20B5/6,F22,F23	1998	1850 1997 2156 2254	4 4 4 4	In Ex	HDVI850000 HDVX850000	34 x 5.5 x 116 29 x 5.5 x 114.2	C C	45-1 45-1

OE PART NUMBER	VALVE GUIDE PART NUMBER	GUIDE TYPE	MAT.	DIMENSIONS	OE PART NUMBER
	01-2056 01-2057	P3 P	G G	6.80 x 12.08 x 50 6.80 x 12.08 x 55	
	G3573 G3574 G11091	P7 P7 P7	G G G	6.60 x 12.11 x 52 6.60 x 12.11 x 63 6.60 x 12.11 x 57	12208-634-000 12209-634-000 12209634670
14711-PWA000 14721-PWA000	G3571 G3572	A-1 A-1	G G	5.5 x 11.06 x 47.5 5.5 x 11.06 x 54	12204-PJ7-305 12205-PJ7-305
14711-PG6000 14721-PG6000					
14711-PM3000 14711-P1KE01 14721-PM3000 14721-P1KE01	G3571 G3572	A-1 A-1	G G	5.5 x 11.06 x 47.5 5.5 x 11.06 x 54	12204-PJ7-305 12205-PJ7-305
14711-PR3000 14721-PR3000	G3571 G3572	A-1 A-1	G G	5.5 x 11.06 x 47.5 5.5 x 11.06 x 54	12204-PJ7-305 12205-PJ7-305
14711-PO7000 14721-PO7000	G3571 G3572	A-1 A-1	G G	5.5 x 11.06 x 47.5 5.5 x 11.06 x 54	12204-PJ7-305 12205-PJ7-305
14711-PO8000 14711-P2A000 14721-PO8000 14721-P2A000	G3571 G3572	A-1 A-1	G G	5.5 x 11.06 x 47.5 5.5 x 11.06 x 54	12204-PJ7-305 12205-PJ7-305
14711-RNA-000 14721-P2A-000	G3571 G3572	A-1 A-1	G G	5.5 x 11.06 x 47.5 5.5 x 11.06 x 54	12204-PJ7-305 12205-PJ7-305
	G11474 G11475	F F	G1 G1	5.51 x 12.10 x 41.7 5.51 x 12.10 x 47	12204-PR3-305 12205-PR3-305
14711-P75000 14721-P75000	01-2589 01-2590	F F	G1 G1	6.60 x 12.10 x 45 6.60 x 12.10 x 50	12204-PM7-305 12205-PM7-305
14711-POA000 14711-PDAE00 14711-POHA00 14721-POA000 14721-POAE00 14721-POHA00	G3571 G3572	A-1 A-1	G G	5.5 x 11.06 x 47.5 5.5 x 11.06 x 54	12204-PJ7-305 12205-PJ7-305

MODEL	YEAR	CC	No. Cyls	IN/ EX	VALVE PART NUMBER	DIMENSIONS	MAT.	SA CG
Accord Shuttle Engs. F18A3, F20B3, F22A	1990	1850 1997 2156	4	In Ex	HDVI850001 HDVX850001	31.9 x 5.5 x 111.8 29 x 5.5 x 123.5	C C	45-1 45-1
Accord FR-V Stream K20A6 16v V-tec	2001	1996	4	In Ex	HDVI860000 HDVX860000	35 x 5.5 x 109.1 29.9 x 5.5 x 108.5	C C	45-1 45-1
Integra Engs, C25, C27	1987	2494 2657	V6 V6	In Ex				
Accord Type “R” Prelude 2.2 V-tec Eng. H22A4/5/7	1993 1998	2157	4	In Ex	HDVI870000 HDVX870000	35 x 5.5 x 106.7 30 x 5.5 x 106.9	C C	45-1 45-1
Accord 2.0 Civic 1.5 16v Prelude 2.0 Engs. D15B H23A1/2/3	1992-96 1988 1992-96	2259 1493 2259	4 4 4	In Ex	HDVI870001 HDVX870001	34 x 6.6 x 103.7 29 x 6.6 x 102.7	C C	45-1 45-1
HONDA DIESEL Accord Civic Eng.20T2N/R	1996	1994	4	In Ex	RVVI844502 RVVX844502	37.2 x 6.9 x 86.7 32.5 x 6.9 x 86.7	P P	45-1 45-1
Civic IV CTDi Eng. 4ZUZ	1686	2003	4	In Ex	OPVI790002 OPVX790002	27.4 x 6 x 98.5 26.5 x 6 x 98.1	P P	45-1 45-1
Civic CDTi Accord CDTi CR-V CDTi FR-V CDTi ENG. N22A1/A2	2004	2204	4	In Ex	HDVI850002 HDVX850002	28.1 x 5.5 x 100.7 26 x 5.5 x 100.4	P P	45-1 45-1

OE PART NUMBER	VALVE GUIDE PART NUMBER	GUIDE TYPE	MAT.	DIMENSIONS	OE PART NUMBER
14711-POBA00	G3571	A-1	G	5.5 x 11.06 x 47.5	12204-PJ7-305
14721-PT6A00	G3572	A-1	G	5.5 x 11.06 x 54	12205-PJ7-305
14711-PNA000	G11472	A-1	G	5.5 x 11.07 x 41.5	12204-PH7-305
14721-PNA000 14721-PRB000	G11513	A-1	G	5.5 x 11.07 x 45.5	12205-PNA-305
	G11096	P3	G	6.60 x 12.08 x 47.5	12204-PH7-305
	G11097	A	G	6.60 x 12.08 x 53	12205-PH7-305
14711-P13000	01-2598	F	G1	5.53 x 12.10 x 43.5	12204-P13-305
14721-P13000	01-2599	F	G1	5.53 x 12.10 x 52	12205-P13-305
14711-PT2000	01-2591	F	G1	6.60 x 12.10 x 39	12204-PT2-305
14721-PT2000	01-2592	F	G1	6.60 x 12.10 x 43	12205-PT2-305
14711-P5TG01	G11323	A	G1	6.95 x 12.07 x 28.5	12204-P5T-G00
14721-P5TG01	G11323	A	G1	6.95 x 12.07 x 28.5	12204-P5T-G00
14711-PLZ-D00	G11251	F	G1	6 x 11.06 x 42.3	
14721-PLZ-D00	G11251	F	G1	6 x 11.06 x 42.3	
14711-RBDE00	G11472	A-1	G	5.5 x 11.07 x 41.5	12204-PNA-305
14721-RBDE00	G11513	A-1	G	5.5 x 11.07 x 45.5	12205-PNA-305

MODEL	YEAR	CC	No. Cyls	IN/ EX	VALVE PART NUMBER	DIMENSIONS	MAT.	SA CG
HYUNDAI								
Atos 1.0 12v Atos Prime 1.1 12v Getz 1.1 12v Eng. G4HC	1999 9/2002	999 1086	4 4	In Ex	HYVI660000 HYVX660000	23 x 5.4 x 100.3 27.1 x 5.4 x 100.1	C C	45-1 45-1
I10 1.1 12v Eng. G4HG	2008	1086	4	In Ex	KAVI680000 KAVX680000	23.5 x 5.5 x 99.57 27 x 5.5 x 99		45-1 45-1
I10 1.2 16v I20 1.2 16v	2008	1248	4	In Ex	HYVI710000 HYVX710000	26.7 x 5.5 x 101.15 24.1 x 5.5 x 101.3		45-1 45-1
S-Coupé L/GT 12v Eng. G4EK	1992 - 1996	1495	4	In Ex	HYVI715000 HYVX715000	27.4 x 6 x 99 32 x 6 x 99.2	P C	45-1 45-1
Accent 1.3 12v Accent 1.5 12v Getz 1.3 12v Lantra 1.5 12v Eng. G4EH/EK/K	1996 - 2000	1341 1495	4 4	In Ex	HYVI715000 HYVX715001	27.4 x 6 x 99 32 x 6 x 98.4	P C	45-1 45-1
Coupe Lantra Eng. G4DG	>2000	1600	4	In Ex	HYVI765000 HYVX765000	30 x 6 x 102.9 25.5 x 6 x 105.3	C P	45-1 45-1
I20 1.4 16v I30 1.4 16v Eng.G4FA I30 1.6 16v Eng. G4FC	2008	1396 1591	4	In Ex	HYVI770000 HYVX770000	31.5 x 5.5 x 93.2 26 x 5.5 x 92.6		45-1 45-1
Coupé 1.6 16v Elantra 1.6 16v Getz 1.6 16v Matrix 1.6 16v Eng. G4ED-G	2000 2002 2001	1599	4	In Ex	HYVI774000 HYVX774000	29.1 x 6 x 91.9 25 x 6 x 92.4	C C	45-1 45-1
Coupé Elantra 2.0 16v Eng. G4GF	1996-1999 1997	1975	4	In Ex	HYVI820000 HYVX820000	32 x 6 x 102.3 27.5 x 6 x 104.7	C P	45-1 45-1
Coupé Matrix Coupé Trajet Tucson Coupé Engs. G4GC-G/ G4GB-G	2003 2002 2003	1795 1975 2656	4 4 V6	In Ex	HYVI820001 HYVX820001	32 x 6 x 114.4 27.5 x 6 x 116.6	C C	45-1 45-1

OE PART NUMBER	VALVE GUIDE PART NUMBER	GUIDE TYPE	MAT.	DIMENSIONS	OE PART NUMBER
22211-02500 22211-02510 22212-02500	G11324 G11324	P-1 P-1	G G	5.5 x 10.06 x 48 5.5 x 10.06 x 48	22114-02500 22114-02500
22211-02200 22212-02200	G11324 G11324	P-1 P-1	G G	5.5 x 10.06 x 48 5.5 x 10.06 48	22114-02500 2211-02500
22211-03200 22212-03200	G11324 G11324	P-1 P-1	G G	5.5 x 10.06 x 48 5.5 x 10.06 x 48	22114-02500 22114-02500
22211-22003 22212-22004	G11418 G11419	P P	S03 S03	6.01 x 11.10 x 42.7 6.01 x 11.10 x 39	22114-22905 22115-22905
22211-22003 22212-22011	G11418 01-S2790 G11419 01-S2791 Check dimensions	P P P P	S03 S03 S03 S03	6.01 x 11.10 x 42.7 6 x 11.12 x 36.6 6.01 x 11.10 x 39 6 x 11.12 x 41	22114-22905 22114-26901 22115-22905 22115-26901
22211-23100 22212-23100					
22211-2B000 22212-2B000	G11478 G11478	P-1 P-1	G G	40.5 x 5.5 x 10.05 40.5 x 5.5 x 10.05	22114-2B000 22114-2B000
22211-26600 22212-26000	GS11461 GS11462	F P-6	S03 S03	6.01 x 11.06 x 36.5 6.01 x 11.06 x 41	22114-26000 22115-26000
22211-23000 22212-23000	01-S2725 01-S2733	P P-6	S03 S03	6.01 x 11.10 x 39 6.01 x 11.10 x 44.5	22114-23901 22115-23901
22211-23600 22212-23600	G11420 G11421	P P-6	G G	6.01 x 11.05 x 46 6.01 x 11.05 x 54.5	22114-23501 22115-23501

MODEL	YEAR	CC	No. Cyls	IN/ EX	VALVE PART NUMBER	DIMENSIONS	MAT.	SA CG
Coupe Sonata Trajet Sante-Fe Tucson Eng. G6B4 24v	2002 2001 2002 2001 2004	2656	V6	In Ex	HYVI820002 HYVX820002	32 x 6 x 96.2 27.5 x 6 x 97.3		45-1 45-1
Elantra Santa Fé Sonata Trajet	2003 2001	1599 1795 1997 2351	4 4 4 4	In Ex	MIVI850001 MIVX850001	34 x 6.57 x 109.5 30.5 x 6.57 x 109.7	C C	45-1 45-1
Santa-Fé Eng. G4JSG	02/2001	2351	4	In Ex				

OE PART NUMBER	VALVE GUIDE PART NUMBER	GUIDE TYPE	MAT.	DIMENSIONS	OE PART NUMBER
22211-37201 22212-37200	G11422 G11423	P-1 P-1-6	G G	6 x 11.05 x 39 6 x 11.10 x 43	22214-23000 22115-37100
22211-33000 22212-33000	G11216 G11219	P P	S03 S03	6.60 x 12.11 x 45.5 6.60 x 12.11 x 50.5	
	G11215 G11218	P P	S03 S03	6.60 x 12.06 x 45.5 6.60 x 12.06 x 50.5	22114-33000 22115-33010

MODEL	YEAR	CC	No. Cyls	IN/ EX	VALVE PART NUMBER	DIMENSIONS	MAT.	SA CG
HYUNDAI DIESEL								
Accent 1.5 CRDi Getz 1.5 CRDi Virna 1.5 CRDi Matrix 1.5 CRDi Eng. D4FA 16v	2005 2004	1493	4	In Ex	HYVI750000 HYVX750000	26 x 5.5 x 93 21 x 5.5 x 93.7		45-3 45-3
I10 1.1 CRDi Eng. D3FA 12v I20/I30 1.4 CRDi I20/I30 1.6 CRDi Eng. D4FA 16v	2008	1120 1396 1582	3 4	In Ex	HYVI750000 HYVX750000	26 x 5.5 x 93 21 x 5.5 x 93.7		45-3 45-3
Accent CRDi Elantra CRDi Matrix CRDi Santa-Fe CRDi Trajet CRDi Tuscon CRDi D3EA/D4EA	2004 2002 2000 2004	1493 1991 1493 1991 1991 1991	3 4 3 4 4 4	In Ex	HYVI830000 HYVX830000	28.5 x 6 x 95.7 24.4 x 6 x 95.4	P P	45-1 45-1
H-1 2.5TDi 2.5 16v. Eng. D4CB	2006	2497	4	In Ex	KAVI910000 KAVX910000	31.7 x 7 x 110.5 28 x 7 x 110.5		45-3 45-3
H-1 2.5TD	1999	2476	4	In Ex	HYVI911000 HYVX911000	42 x 8 x 136 36 x 8 x 136.2	P P	45-1 45-1
Galloper TD/TDi Terracan CRDi Engs. D4BB-D4BF	1999 2003	2477 2902	4 4	In Ex	MIVI911003 MIVX911003	40.1 x 8 x 130 34 x 8 x 129.7	P P	45-1 45-1
Galloper TD 4D56T	1984-98	2476	4	In Ex	MIVI911002 MIVX911002	40 x 8 x 136.5 34 x 8 x 136.5	P P	45-1 45-1
Terracan 2.9 CRDi 16v Eng. J3TCi	2001	2902	4	In Ex	KAVI971000 KAVX971000	34 x 7 x 126.2 31.6 x 7 x 126	C P	45-1 45-1

OE PART NUMBER	VALVE GUIDE PART NUMBER	GUIDE TYPE	MAT.	DIMENSIONS	OE PART NUMBER
22211-2A100 22212-2A100	G11477 G11477	F F	G G	31.5 x 5.5 x 11.03 31.5 x 5.5 x 11.03	22114-2A000 22114-2A000
22211-2A100 22212-2A100	G11477 G11477	F F	G G	31.5 x 5.5 x 11.03 31.5 x 5.5 x 11.03	22114-2A000 22114-2A000
22211-27000 22212-27000	01-S2720 01-S2720	P P	S03 S03	6.01 x 11.05 x 36.6 6.01 x 11.05 x 36.6	22114-27000 22114-27000
22211-4A061 22212-4A061	G11490 G11491	P-1 P-1	G G	7 x 12.06 x 43.3 7 x 12.06 x 39.4	22114-4A000 22115-42000
22211-42200 22212-42200	01-2746 01-2748	P P-6	G1 G1	8.00 x 13.07 x 71 8.00 x 13.07 x 74	22114-42000 22115-42000
22211-42520 22212-42520	01-2746 01-2748	P P-6	G1 G1	8.00 x 13.07 x 71 8.00 x 13.07 x 74	22114-42000 22115-42000
22211-42850 22212-42850	01-2170 01-2170	P P	G G	8.00 x 13.11 x 71 8.00 x 13.11 x 71	22114-42520 22114-42520
OK5511-2111A OK5511-2121A	G11483 G11483	F-6 F-6	G G	52.7 x 7 x 12.05 52.7 x 7 x 12.05	OK5511-0281 OK5511-0281

MODEL	YEAR	CC	No. Cyls	IN/ EX	VALVE PART NUMBER	DIMENSIONS	MAT.	SA CG
ISUZU DIESEL								
Gemini D Gemini TD Eng. 4EC1 4EC1T	1984 1988	1488	4	In Ex	OPVI790001 OPVX790001	34.6 x 7 x 104.1 30.6 x 7 x 104	P P	45-1 45-1
Trooper 4JB1-T	1988	2772	4	In Ex	IZVI930000 IZVX930000	40.1 x 8 x 118.1 35.7 x 8 x 117.6	P P	45-1 45-1
Trooper 3.0TD Eng. 4JX1	2001	3000	4	In Ex	IZVI954001 IZVX954001	33 x 7 x 98.2 33 x 7 x 98.1	P P	45-1 45-1
Trooper Pick-up Eng. 4JG2T	1991	3059	4	In Ex	IZVI954000 IZVX930000	42.1 x 8 x 117.6 35.7 x 8 x 117.6	P P	45-1 45-1
ISUZU PETROL								
Gemini, Rodeo Trooper Engs. G180Z, 4ZC1, 4ZD1, 4ZE1	1966 1985/91	1584 1817 1949	4 4 4	In Ex				

OE PART NUMBER	VALVE GUIDE PART NUMBER	GUIDE TYPE	MAT.	DIMENSIONS	OE PART NUMBER
8-94326-843-0	01-2058	P-1	G	7.02 x 11.54 x 43	642005
8-94110-017-3 8-94115-059-2	01-2058	P-1	G	7.02 x 11.54 x 43	642005
9-94464-921-0	01-2149	A-1-2	G	8.00 x 14.03 x 50.3	94029-347
8-94433-245-0	01-2149	A-1-2	G	8.00 x 14.03 x 50.3	94029-347
8-97137-154-0 8-97137-155-1					
8-97131-729-0 8-97043-86H					
	01-1697	A1	G	7.99 x 12.05 x 45.9	8-942067620
	01-1698	A1	G	7.99 x 12.05 x 55	8-942067630

MODEL	YEAR	CC	No. Cyls	IN/ EX	VALVE PART NUMBER	DIMENSIONS	MAT.	SA CG
JAGUAR								
2.4, 240 3.4, 340 S-type XK120/140/150	1956/69 1948/61	2482 3442 3442	6 6 6	In Ex	JRVI830000 JRVX830000	44.5 x 7.9 x 106 41 x 7.9 x 103.5	P P	45-1 45-1
2.8 XJ 3.8 Mk9/10, XK150 E-type 4.2 420, MK10, XJ6, Sovereign E-type	1969-73 1958/61 1961/65 1959/68 1968/86 1965/71	2792 3442 4235	6 6 6	In Ex	JRVI830000 JRVX830000	44.5 x 7.9 x 106 41 x 7.9 x 103.5	P P	45-1 45-1
2.9 3.6 XJ6, Sovereign XJS	1986/90 1983/91	2919 3590	6 6	In Ex				
3.2 - 24v 4.0 - 24v XJ6, Sovereign XJR, XJS	9/1990 1989	3239 3980	6 6	In Ex				
5.3 E-type XJ12 XJs	1971/81	5343	V12	IN Ex				
5.3 Sovereign XJ12 XJs	1981-93	5343	V12	In Ex				

OE PART NUMBER	VALVE GUIDE PART NUMBER	GUIDE TYPE	MAT.	DIMENSIONS	OE PART NUMBER
ECH1547	JRVG830000	A1	G	7.90 x 12.78 x 46	G26198
	01-0318			12.85	
EAC1548	01-0319	A2	G	7.91 x 12.73 x 49.5	G8310
	01-1353			12.85	C26195
ECH1547	JRVG830000	A1	G	7.93 x 12.78 x 46	C26198
	01-1352	A112		7.93 x 12.85 x 47.5	C27477
EAC1548	01-0319	A2	G	7.91 x 12.73 x 49.5	G8310
	01-1353	A12	G	7.93 x 12.85 x 49.5	C26195
	JRVG830000	A1	G	7.93 x 12.78 x 46	C26198
	01-1352	A112	G	7.93 x 12.85 x 47.5	C27477
	JRVG830000	A1	G	7.93 x 12.78 x 46	C26198
	01-1352	A112	G	7.93 x 12.85 x 47.5	C27477
	01-1388	A112	G	7.91 x 12.85 x 48.5	C29890
	01-1388	A112	G	7.91 x 12.85 x 48.5	C29890
	01-1388	A112	G	7.91 x 12.85 x 48.5	C29890
	01-1389	A12	G	7.91 x 12.85 x 54	C29386
	01-1983	A112	G	7.91 x 12.97 x 48.5	C29391
	01-1985	A12	G	7.91 x 12.97 x 43.8	EAC3637

MODEL	YEAR	CC	No. Cyls	IN/ EX	VALVE PART NUMBER	DIMENSIONS	MAT.	SA CG
JEEP (DIESEL)								
Patriot 2.0CRDi 16v Eng. ECD	2006	1968	4	In	ADVI810014	29.1 x 6 x 87.8		45-3
				Ex	ADVX810014	25.4 x 6 x 87.5		45-3
Cherokee 3.0 CRD 24v Eng. OM642.982	2005	2987	V6	In	MBVI800002	28.5 x 6 x 102.3	P	45-3
				Ex	MBVX800002	25.4 x 6 x 102.3	P	45-3
Cherokee Eng. J8S		2068	4	In	RNVI860000	40.2 x 8 x 111.6	P	45-1
				Ex	RNVX860000	33.3 x 8 x 111.6	P	45-1
Grand Cherokee 2.7 CRD Eng. OM612	2003	2685	5	In	MBVI880000	30.1 x 7 x 104	P	45-1
				Ex	MBVX880000	28.4 x 7 x 104.4	P	45-1
Cherokee 2.8 16v CRDi. Eng. VM/ENS	2003	2776	4	In	CHVI920000	32.4 x 6 x 109		45-3
				Ex	CHVX920000	30.9 x 6 x 108.3		45-3
Cherokee Grand Cherokee 2.5 TD VM Eng.	1990	2499	4	In	VMVI920000	40.1 x 8 x 121	P	35-1
				Ex	VMVX920000	34 x 8 x 121	P	45-1
JEEP(PETROL) Cherokee Grand Cherokee 242ci	1990-1998	3960	6	In	JPVI984000	48.5 x 8 x 124.5	C	45-1
				Ex	JPVX984000	38.1 x 8 x 125	C	45-1

OE PART NUMBER	VALVE GUIDE PART NUMBER	GUIDE TYPE	MAT.	DIMENSIONS	OE PART NUMBER
68001582AA 68001583AA	G11255 G11255	F F	B B	42 x 5.9 x 10.06 42 x 5.9 x 10.06	
05175396AA 05175397AA	G11398 G11398	F F	G G	34.5 x 6 x 11.56 34.5 x 6 x 11.56	
05073735AA 05073737AA 05073738AA	01-S2681 01-S2681	F F	S03 S03	7 x 12.56 x 37.5 7 x 12.56 x 37.5	6110530329 6110530329
05066770AA 05066769AA	G11476 G11476	F F	G G	44.5 x 6.01 x 11.03 44.5 x 6.01 x 11.03	5066773AA 5066773AA
04720146 04720148	01-1973 01-1973	A A	G G	8.01 x 14.05 x 55 8.01 x 14.05 x 55	
33003515 33003860R					

MODEL	YEAR	CC	No. Cyls	IN/ EX	VALVE PART NUMBER	DIMENSIONS	MAT.	SA CG
KIA								
Picanto 1.0/1.2 12v Engs G4HE/ G4HG	2004	999 1088	3 3	In Ex	KAVI680000 KAVX680000	23.5 x 5.5 x 99.6 27 x 5.5 x 98.9	C C	45-1 45-1
Rio 1.3	2003	1343	4	In Ex	KAVI755001 KAVX755001	37.1 x 6.5 x 105.1 31.6 x 6.5 x 103.4	C P	45-1 45-1
Rio 1.5 16v Eng. A5D	2002	1493	4	In Ex	KAVI755000 KAVX755000	27.8 x 5.5 x 96.4 24.9 x 5.5 x 95.5	C C	45-1 45-1
Ce'ed 1.4 16v Eng. G4FA Ce'ed 1.6 16v Eng. G4FC	2006 2008	1396 1591	4	In Ex	HYVI770000 HYVX770000	31.5 x 5.5 x 93.2 26 x 5.5 x 92.6		45-1 45-1
Carens 16v Cerato 16v Rio 16v Eng. G4ED	02-04 2004 2006	1599	4	In Ex	HYVI774000 HYVX774000	29.1 x 6 x 91.9 27.5 x 6 x 92.4	C C	45-1 45-1
Carens 16v	2004	1594	4	In Ex	KAVI780000 KAVX780000	29.1 x 5.5 x 96 25.8 x 5.5 x 94.8	C C	45-1 45-1
Carens 1.8	2003	1793	4	In Ex	KAVI810000 KAVX810000	31.5 x 6 x 102.9 27.4 x 6 x 90.1	C C	45-1 45-1
Magentis 2.5l 24v Optima 2.5l 24v Sportage 2.7 24v Eng. G6BA	2003 2004	2493 2656	V6 V6	In Ex	HYVI820002 HYVX820002	32 x 6 x 96.2 27.5 x 6 x 97.3	P P	45-1 45-1
Sedona V6	2002	2497	V6	In Ex	MZVI830000 MZVX830000	31.5 x 6 x 89.8 27.6 x 6 x 90.1	C C	45-1 45-1
Magentis 16v	2000	1997	4	In Ex	MIVI850001 MIVX850001	34 x 6.5 x 109.5 30.5 x 6.5 x 109.7	C C	45-1 45-1

OE PART NUMBER	VALVE GUIDE PART NUMBER	GUIDE TYPE	MAT.	DIMENSIONS	OE PART NUMBER
22211-02200 22212-02200	G11324 G11324	P-1 P-1	G G	5.5 x 10.06 x 48 5.5 x 10.06 x 48	22114-02500 22114-02500
OK30C12111 OK30C12121					
OK30E12111 OK30E12121	G11324 G11324	P-1 P-1	G G	5.5 x 10.06 x 48 5.5 x 10.06 x 48	22114-02500 22114-02500
22211-2B000 22212-2B000	G11478 G11478	P-1 P-1	G G	5.5 x 10.05 x 40.5 5.5 x 10.05 x 40.5	22114-2B000 22114-2B000
22211-26600 22212-26000	GS11461 G11098 GS11462 G11098	P-1 P-1 P-1-6 P-1	S03 G S03 G	6.01 x 11.06 x 36.5 6.01 x 11.07 x 40 6.01 x 11.06 x 40 6.01 x 11.07 x 40	22114-26000 22115-26000
OK2NC-12111 OK2NC-12121					
OK247-12111 OK247-12121					
22211-37201 22212-37200	G11422 G11423		G g	6 x 11.05 x 39 6 x 11.10 x 43	22114-2300 22115-37100
OK9BV-12111A OK566-12121 OK9BV-12121					
22211-33000 22212-33000	01-S2744 01-S2745	P P	S03 S03	6.60 x 12.10 x 45.5 6.60 x 12.10 x 50.5	

MODEL	YEAR	CC	No. Cyls	IN/ EX	VALVE PART NUMBER	DIMENSIONS	MAT.	SA CG
Sportage Eng. FE 16v	1995	1988	4	In Ex	KAVI860000 KAVX860000	38.1 x 7 x 103.7 32 x 7 x 102.8	C p	45-1 45-1
Sportage 16v Eng. G4GC	1998	1975	4	In Ex	KAVI860001 KAVX860001	32 x 6 x 114.4 27.5 x 6 x 116.6	C C	45-1 45-1
Opirus V6	2004	3497	V6	In Ex	MIVI911000 MIVX911000	35 x 6.5 x 106.3 30.5 x 6.5 x 105.4	C C	45-1 45-1
KIA DIESEL								
Picanto 1.1CRDi Eng. D3FA 12v Rio, 1.5CRDi 16v Eng. DFFA Ce'ed Cerato 1.6CRDi 16v Eng. D4FB	2005 2007	1120 1493 1582	3 4 4	In Ex	HYVI750000 HYVX750000	26 x 5.5 x 93 21 x 5.5 x 93.7		45-3 45-3
Carens Sportage CRDi	2002 2004	1991	4	In Ex	HYVI830000 HYVX830000	28.5 x 6 x 95.7 24.4 x 6 x 95.4	P P	45-1 45-1
Sorento CRDi 2.5 16v. Eng. D4CB	2003	2497	4	In Ex	KAVI910000 KAVX910000	31.7 x 7 x 110.5 28 x 7 x 110.5		45-3 45-3
Pregio TDi	2004	2476	4	In Ex	MIVI911003 MIVX911003	39.8 x 8 x 130.1 34 x 8 x 129.9	P P	45-1 45-1
Sedona TDi	1998	2902	4	In Ex	KAVI971000 KAVX971000	34 x 7 x 126.2 31.6 x 7 x 126	C P	45-1 45-1
LADA								
Samara VAZ2108, 2111, 2112	1987	1100 1200 1500	4 4 4	In Ex				

OE PART NUMBER	VALVE GUIDE PART NUMBER	GUIDE TYPE	MAT.	DIMENSIONS	OE PART NUMBER
K93012111 K93012121					
22211-23600 22212-23600	GS11461 GS11462	F P-6	S03 S03	6.01 x 11.06 x 36.5 6.01 x 11.06 x 41	22114-26000 22115-26000
22211-35520 22212-35500					
22211-37201 22211-2A100 22212-2A100	G11477 G11477	F F	G G	5.5 x 11.03 x 31.5 5.5 x 11.03 x 31.5	22114-2A000 22114-2A000
22211-27000 22212-27000	G11424 G11424	P P	G G	6.01 x 11.05 x 36.6 6.01 x 11.05 x 36.6	22114-27000 22114-27000
22211-4A061 22212-4A061	G11490 G11491	P-1 P-1	G G	7 x 12.06 x 43.3 7 x 12.06 x 39.4	22114-4A000 22115-42000
22211-42520 22212-42520	G11327 G11328	P P-6	G1 G1	8.00 x 13.07 x 71 8.00 x 13.07 x 74	22114-42000 22115-42000
OK055-112111A OK055-112121A	G11483 G11483	F F			
	01-2326 01-2327	F1-7 F1-8	G G	8.02 x 14.06 x 38 8.02 x 14.06 x 38	2108.1007032/20 2108.1007033/20

0 MODEL	YEAR	CC	No, Cyls	IN/ EX	VALVE PART NUMBER	DIMENSIONS	MAT.	SA CG
LANCIA								
Y10 LX, Fire, 4wd Y10 Selectronic Y10 4wd Eng.156A-/A2/C	1981 1989	999 1108	4 4	In Ex	FTVI700001 FTVX700000	30.4 x 7 x 97 27.5 x 7 x 97.2	P P	45-1 45-1
Y10 Eng. 146A5 156A1	1985/89	999 1301	4 4	In Ex				
Y10 Eng. 156B	1985/95	1301	4	In Ex				
Y Eng. 840A3	1998	1242	4	In Ex	FTVI700000 FTVX700000	31.5 x 7 x 97.1 27.5 x 7 x 97.2	C P	45-1 45-1
Y 16v Engs. 179B9/ 188A5	1997	1242	4	In Ex	FTVI708000 FTVX708000	26.9 x 6 x 95.2 22.4 x 6 x 96	C P	45-3 45-3
Ypsilon 1.4ie 8v Musa 1.4ie 8v Eng. A350A1000	2005	1368	4	In Ex	FTVI708002 FTVX708002	33.3 x 5 x 99.9 28.1 x 5 x 100.5		45-3 45-3
Ypsilon 1.4ie 8v Musa 1.4ie 8v Eng. A350A1000 **Nat. power eng.**	2005	1368	4	In Ex	FTVI708003 FTVX708003	33.3 x 5 x 99.9 28.1 x 5 x 100.5		30-3 30-3
Y 12v Enf 840A2	1996	1370	4	In Ex	FTVI820000 FTVX820000	30.5 x 7 x 110.4 35.5 x 7 x 110.4	P P	45-1 45-1
Delta HPE K LS.LX 20v Lybra Thesis Eng. 182A1/ A8/838.A2, 841D/	1994 1999 2001	1747 1970 2446	4 4 5	In Ex	FTVI820002 FTVX820002	33.6 x 7 x 113.1 28.1 x 7 x 108.5	P P	45-3 45-3
K 20v K 20v Turbo Eng. 838.A1	1994	1998	5	In Ex	FTVI820003 FTVX820003	30 x 7 x 113.1 26.1 x 7 x 108.5	P P	45-3 45-3

OE PART NUMBER	VALVE GUIDE PART NUMBER	GUIDE TYPE	MAT.	DIMENSIONS	OE PART NUMBER
5942727 7666228 5942728 7666227	G2196 G2196	F F	G G	7.02 x 13.03 x 42.5 7.02 x 13.03 x 42.5	4265699 4265699
	01-0195 01-0195	F G	G G	8.02 x 15.06 x 46.5 8.02 x 15.06 x 46.5	
	01-2090 01-2090	F F	B1 B1	8.02 x 14.02 x 46.6 8.02 x 14.02 x 46.6	5997546 5667546
7770334 46436048 7666227 46514754	01-2386 01-2386	F F	G1 G1	7.02 x 13.03 x 40 7.02 x 13.03 x 40	
46403681 46471639	G11069 G11069	F F	G1 G1	6.02 x 10.03 x 39.7 6.02 x 10.03 x 39.7	46441525 46441525
55194219 55200422	G11425 G11425	F F	G G	5 x 10.03 x 44 5 x 10.03 x 44	
	GS11425 GS11425	F F	S06 S06	5 x 10.03 x 44 5 x 10.03 x 44	
7712114 46413334	G3531 G3531	F F	G1 G1	7.02 x 13.03 x 42.5 7.02 x 13.03 x 42.5	7756897 7756897
7766564 7766565	G3531 G3531	F F	G1 G1	7.02 x 13.03 x 42.5 7.02 x 13.03 x 42.5	7756897 7756897
7735898 7735899 46417653	G3531 G3531	F F	G1 G1	7.02 x 13.03 x 42.5 7.02 x 13.03 x 42.5	7756897 7756897

MODEL	YEAR	CC	No. Cyls	IN/ EX	VALVE PART NUMBER	DIMENSIONS	MAT.	SA CG
Dedra 16v Delta 4x4 Delta HF &Turbo Intergrale 2.0HF K 2.0 Turbo Thema ie & Turbo Engs. 834F2/835A3	1994 1989 1991 1989 1989	1995	4	In Ex	FTVI840000 FTVX840000	34.5 x 7 x 128 28.5 x 7 x 125.6	P P	45-1 45-1
Dedra Turbo Intergrale Thema Engs. 831B5, C2, C5	1986/92	1995	4	In Ex Ex				
Delta GT/HPE Lybra 12v Eng.182A4	1997 1999	1581	4	In Ex	FTVI864000 FTVX864000	30.3 x 7 x 102.5 29.8 x 7 x 102.9	C C	45-1 45-1
Z ie Turbo Eng, XU10J2-CTE(RGX)	1994	1998	4	In Ex	PGVI860001 PGVX860001	42.6 x 8 x 108.8 34.5 x 8 x 108.4	P P	45-3 45-3
Z 16v Eng. XU10J4R (RFV)	1998	1998	4	In Ex	PGVI860003 PGVX860003	34.6 x 6 x 106.4 29.6 x 6 x 105.8	P P	45-3 45-3
Phedra 16v Eng. RFN	2003	1997	4	In Ex	PGVI860004 PGVX860004	33.3 x 6 x 106.1 28.9 x 6 x 103.6	C P	45-1 45-1
K K Coupe Thesis 24v Eng. 838B/841A	1997 2001	2959	V6	In Ex	ARVI930001 ARVX930001	35.6 x 7 x 102 31.1 x 7 x 102.2	C P	45-3 45-3

OE PART NUMBER	VALVE GUIDE PART NUMBER	GUIDE TYPE	MAT.	DIMENSIONS	OE PART NUMBER
7574739 7722907 7574742 7650916 7598073 7611673	G3208 G3208	F F	B B	7.02 x 14.03 x 51.3 7.02 x 14.03 x 51.3	7611679 7611679
	G2231 G2231 G2239	F F F	G1 G1 B	8.02 x 14.06 x 42 8.02 x 14.06 x 42 8.02 x 14.06 x 42	4250801 4250801 92399099
46462158 46517325 46462159 46461209	G2196 G2196	F F	G G	7.02 x 13.03 x 42.5 7.02 x 13.03 x 42.5	4265699 4265699
9605936180 9611782880	G3340 G3344	F F	B B	8.01 x 14.06 x 43.6 8.01 x 13.07 x 50.6	
9628943380 9629861180	G11158 G11159	P P	B G	6.00 x 12.06 x 40.8 6.00 x 12.06 x 40.8	
9623950380 9636001780	G11315 G11317	F F	B G	6.00 x 12.07 x 40 6.00 x 12.07 x 40	
60810666 60663241 60810667 60560644	G11003 G11005	F F	B G1	7.00 x 12.06 x 38 7.00 x 12.07 x 43	60812062 60810592

MODEL	YEAR	CC	No. Cyls	IN/ EX	VALVE PART NUMBER	DIMENSIONS	MAT.	SA CG
LANCIA DIESEL								
Y Multijet 16v Eng. 188A4	2003	1248	4	In Ex	FTVI730000 FTVX730000	21.8 x 6 x 109.2 21.8 x 6 x 109.2	P P	45-3 45-3
Ypsilon 1.3 16v Musa 1.3 16v Eng. MJT Euro 5	2009	1248	4	In Ex	FTVI730001 FTVX730001	22.45 x 6 x 109.2 22.5 x 6 x 109.2		45-3 45-3
Musa 1.6 16v New Delta 1.6 Engs. MJT 350A2000 350A3000	2008	1598	4	In Ex	ARVI720002 ARVX820001	26.6 x 5 x 114.4 24.5 x 5 x 114.4		45-3 45-3
K TD 10v Eng. 838A3	1994	2387	5	In Ex	FTVI820001 FTVX820001	37.5 x 8 x 114.3 31 x 8 x 114.1	P P	45-3 45-3
New Delta 1.9 MJT Eng. 844A.1000 New Delta 2.0 MJTD Eng. 198A.5000 Thesis 2.4 JTD 20v Eng. 841P0000 Fr eng.5553218	7/2006 2009 7/2006	1910 1956 2387	4 4 5	In Ex	ARVI820001 ARVX820001	28 x 5 x 114.4 Ret to S/E 4.9mm 24.5 x 5 x 114.4 Ret to S/E 5.9mm		45-3 45-3
Thesis 2.4 JTD 20v Eng. 841P0000 T0 eng.5553217	2005	2387	5	In Ex	ARVI820002 ARVX820002	28 x 5 x 114.4 Ret to S/E 5.8mm 24.5 x 5 x 114.4 Ret to S/E 6.5mm		45-3 45-3
K JTD Lybra JTD Thesis JTD Eng.838A8 839A5/A6 841C/CO	1988 2001	1910 2387	4 5	In Ex	FTVI820004 FTVX820004	35.5 x 8 x 115 34.5 x 8 x 115	P P	45-3 45-3
Dedra TD/TDS Delta TD Prisma D/TD Engs. 149A1 831A1/835A4	1997 1986 1984	1929	4	In Ex	FTVI826000 FTVX826000	37.4 x 8 x 116.6 33.5 x 8 x 116.6	P P	45-1 45-1

OE PART NUMBER	VALVE GUIDE PART NUMBER	GUIDE TYPE	MAT.	DIMENSIONS	OE PART NUMBER
46518930 46518931	G11310 G11310	P P	G G	6.02 x 10.03 x 43 6.02 x 10.03 x 43	46816601 46816601
55204574 55223836	G11310 G11310	P P	G G	6.02 x 10.03 x 43 6.02 x 10.03 x 43	46816601 46816601
55205125 55207955	G11481 G11481	F-1 F-1	G G	46.7 x 5 x 10.03 46.7 x 5 x 10.03	55210016 55210016
7798620 7783225	G11000 01-2433 01-2407 01-2409 G11000 01.2433 01-2407 01-2409	F F	G1 G1	8.02 x 14.03 x 43 14.06 14.11 14.26 8.02 x 14.03 x 43 14.06 14.11 14.26	7565472 7565472
55206431 55205183 5520795	G11481 G11481	F-1 F-1	G G	46.7 x 5 x 10.03 46.7 x 5 x 10.03	55210016 55210016
55190248 55190249	G11481 G11481	F-1 F-1	G G	46.7 x 5 x 10.03 46.7 x 5 x 10.03	55210016 55210016
60814605 46750859 60814604 46783962	G11000 01-2433 01-2407 01-2409 G11000 01.2433 01-2407 01-2409	F F	G1 G1	8.02 x 14.03 x 43 14.06 14.11 14.26 8.02 x 14.03 x 43 14.06 14.11 14.26	7565472 7565472
5990532 7547158 5990533 7588577	G2235 G2235	F F	G1 G1	8.02 x 14.06 x 46.5 8.02 x 14.06 x 46.5	

MODEL	YEAR	CC	No. Cyls	IN/ EX	VALVE PART NUMBER	DIMENSIONS	MAT.	SA CG
Thesis JTD 20v Eng. 841G	2003	2387	5	In	ARVI820000	27.8 x 6 x 114.4	P	45-3
				Ex	ARVX820000	25.8 x 6 x 114.4	P	45-3
Phedra JTD Eng, RHW	2003	2179	4	In	PGVI850002	29.8 x 6 x 105	P	45-3
				Ex	PGVX850002	25 x 6 x 104.9	P	45-3
Phedra JTD Eng. DW10ATED	2004	1997	4	In	PGVI850003	29.9 x 6 x 106.3	P	45-3
				Ex	PGVX850003	25 x 6 x 106.3	P	45-3
Z TDS Eng. P8C	1999	2088	4	In	PGVI860002	37.9 x 8 x 122.2	P	45-3
				Ex	PGVX860002	33.8 x 8 x 121.8	P	45-3
Thema TD Engs, 8144.91 8144.97	1984 1989	2445 2499	4 4	In	FTVI930000	41 x 8 x 121	P	30-1
				Ex	FTVX930000	34.5 x 8 x 122	P	45-1

OE PART NUMBER	VALVE GUIDE PART NUMBER	GUIDE TYPE	MAT.	DIMENSIONS	OE PART NUMBER
46802049 46787902	G11302 G11302	F F	G G	6.02 x 11.03 x 47 6.02 x 11.03 x 47	55186786 55186786
9627184380 9634437580	GS11319 GS11319	A A	S06 S06	6.01 x 10.06 x 41.5 6.01 x 10.06 x 41.5	
9635317980 9635318480	GS11396 GS11396	F F	S06 S06	6.00 x 12.06 x 42.5 6.00 x 12.06 x 42.5	
9600781780 9604295780	G3513 G3513	F F	B B	8.01 x 13.07 x 54.5 8.01 x 13.07 x 54.5	
4757358 7301820 4826033 7301821 7302157	G2269(8144.91) G2713(8144.97) G2269(8144.91) G2713(8144.97)	A F A F	G1 G1 G1 G1	8.02 x 13.03 x 60 8.02 x 13.03 x 56 8.02 x 13.03 x 60 8.02 x 13.03 x 56	4726483 4749395 4726483 4749395

MODEL	YEAR	CC	No. Cyls	IN/ EX	VALVE PART NUMBER	DIMENSIONS	MAT.	SA CG
LEYLAND & DAF								
Taxi FX4D	1968	2498	4	In Ex				
Bison Boxer Laird Buffalo Terrier FG, FJ, FM, WF Series Engs. 38JJ/VD 4/98, 4/98NV 51JJ/VD 57JJ/JC/VD 6/98DV/NV/TV	1968 1962 1962 1968 1972 1962	 3770 3770 5103 5655 5650	 4 4 6 6 6	In Ex				
Comet, Super Comet, Chieftan, Clydesdale, Reiver. Engs. 0350 Mk2 0350 Mk3 0370 0375 0400 PP 0401/0402 0410/0411	 1952/55 1956/73 1960 1958/73 1960 1966/82 1972/79	 5800 6100 6200 6540	 6 6 6 6	In Ex				
Atlantean Eng. 0680 PP Leopard National Panther Eng. 0690 Turbo	1951 1966	11100 11100	6 6	In Ex				
Leyland TL11	1979	11100	6	In Ex	LYVI130000 LYVX130000	55.1 x 11 x 151.8 46.5 x 11 x 150.3	P P	30-1 30-1
Daf 900,1100 Eng DD575 1600, 1800 Eng	1960/69 1969	5700 6100	6 6	In Ex				
DU825/DHU825	1969/78	8200	6	In Ex				
Daf 2400, 2600 DKA/B/L 1160 2600, 2800 DKS/T 1160T	1969/76 1973	11600 11600	6 6	In Ex				
Daf F series Engs. DKV/X/Z WS225/259/282	1988/91	11600	6	In Ex				

OE PART NUMBER	VALVE GUIDE PART NUMBER	GUIDE TYPE	MAT.	DIMENSIONS	OE PART NUMBER
	01-1446	A1	G	8.73 x 14.34 x 54.4	12B2108
	01-1974	A169	G	8.73 x 14.34 x 63.5	12B2109
	01-0358	G	G	8.81 x 15.09 x 73	86K144
	01-0359	G	M	8.81 x 15.09 x 82.5	86K145
	01-0887	A	G	8.72 z 14.33 x 71	232864
	01-0887	A	G	8.72 x 14.33 x 71	232864
	01-0888	A	G	11.11 x 17.5 x 68	281325
	01-0888	A	G	11.11 x 17.5 x 68	281325
612817	01-0888	A	G	11.11 x 17.5 x 68	281325
VEJ1005	01-0888	A	G	11.11 x 17.5 x 68	281325
	01-0887	A	G	8.72 x 14.33 x 71	232864
	01-0887	A	G	8.72 x 14.33 x 71	232864
	01-0389	A	G	10 x 16.03 x 70	240472-5
	01-0389	A	G	10 x 16.03 x 70	240472-5
	01-0788 01-1893 01-0788 01-1893	A A2 A A2	G G G G	11.11 x 17.50 x 70.3 11.07 x 17.50 x 70.1 11.11 x 17.50 x 70.3 11.07 x 17.50 x 70.1	236534-3 655401 236534-3 655401
	01-2501	A2	G	11.07 x 17.55 x 75	0266425
	01-2501	A2	G	11.07 x 17.55 x 75	0266425

MODEL	YEAR	CC	No. Cyls	IN/ EX	VALVE PART NUMBER	DIMENSIONS	MAT.	SA CG
MAZDA								
121 323 B3 SOHC	1989	1323	4	In Ex	MZVI720000 MZVX720000	25.5 x 6 x 108.2 21.5 x 6 x 109.4	C C	45-1 45-1
323 Engs E3, E5 616, 626, 808 Bongo & Pick up Eng. NA, TC, UC VB, VC	1970/84	1272 1388 1490 1586 1796	4 4 4 4 4	In Ex				
323 Eng. PC 626 929 Pick up Eng. MA	1976/84	900 1970	4 4	In Ex				
Demio 16v 323 1.5 16v 323 1.6 16v Engs. B5,B6	1998 1989	1498 1597	4 4	In Ex	MZVI710000 MZVX710000	25.5 x 6 x 104 21.5 x 6 x 105	C P	45-1 45-1
121 1.3i Eng. JJA/J4C	03/1996	1299	4	In Ex	FDVI740000 FDVX687000	34.5 x 7 x 104 29 x 7 x 104.4	C P	45-3 45-3
Mazda 2 16v Eng. C2	2004	1242	4	In Ex	FDVI720002 FDVX720002	26 x 6 x 99.7 22.1 x 6 x 101.7	C C	45-3 45-3
Mazda 3 16v	2003	1349	4	In Ex	MZVI740000 MZVX740000	27.7 x 5.5 x 98.3 24 x 5.5 x 98.8	C P	45-1 45-1
MX-3 24v Xedos 6/9 24v	1992 1994	1845 (V6) 1995 (V6)	V6 V6	In Ex	MZVI750000 MZVX750000	28.5 x 6 x 94.2 23 x 6 x 95.2	C C	45-1 45-1
323 Lantis 16v Eng. Z5-DE	1994- 1998	1489	4	In Ex	MZVI753000 MZVX753000	27.7 x 5.5 x 92.3 24 x 5.5 x 92.8	C P	45-1 45-1
Mazda 2 1.4 16v Eng. FXJA	2003	1388	4	In Ex	FDVI760006 FDVX760005	28.1 x 6 x 99.4 24.1 x 6 x 101.5	C C	45-3 45-3
Mazda 2 1.6 16v Eng. FXJA	2003	1596	4	In Ex	FDVI760005 FDVX760005	30 x 6 x 99. 24.1 x 6 x 101.5	C C	45-3 45-3

OE PART NUMBER	VALVE GUIDE PART NUMBER	GUIDE TYPE	MAT.	DIMENSIONS	OE PART NUMBER
B3C7-12-111A B3C7-12-121A B3D2-12-121A	G11213 G11213	P-1-6 P-1-6	G1 G1	6.01 x 11.05 x 48.6 6.01 x 11.05 x 48.6	B6Z0-10-290 B6Z0-10-290
	G2937 G2938	F1 F1-6	G G	8.09 x 14.03 x 50.5 8.09 x 14.03 x 50.5	0370-10-280 0305-23-090
	G2938 G2938	F1-6 F1-6	G G	8.09 x 14.03 x 50.5 8.09 x 14.03 x 50.5	0305-23-090 0305-23-090
B366-12111 B366-12121	G11213 G11211 (With no end counter bore) G11213	P-1-6 P-1 P-1-6	G1 G1	6.01 x 11.05 x 48.6 6.01 x 11.05 x 48.6 6.01 x 11.05 x 48.6	B6Z0-10-290 B6Z0-10-280 B6Z0-10-290
1E03-12111 1E03-12121					
1E06-12111 C201-12111 C201-12121	G11221 G11221	A A	G G	6.00 x 11.05 x 39 6.00 x 11.05 x 39	
ZJ01-12111A ZJ01-12121	G11427 G11427	A-1 A-1	G G	5.5 x 11.05 x 39 5.5 x 11.05 x 39	
KF01-12111A KF01-12121 K801-12121					
Z501-12111A Z501-12111C Z501-12121	01-S2758 01-S2758	A-1-6 A-1-6	S03 S03	5.51 x 11.05 x 44.5 5.51 x 11.05 x 44.5	Z5Y1-10-280A Z5Y1-10-280A
C401-12111A C401-12121	G3499 G3499	P P	G G	6.01 x 11.04 x 40.5 6.01 x 11.04 x 40.5	
C601-12111 C401-12121	G3499 G3499	P P	G G	6.01 x 11.04 x 40.5 6.01 x 11.04 x 40.5	

MODEL	YEAR	CC	No. Cyls	IN/ EX	VALVE PART NUMBER	DIMENSIONS	MAT.	SA CG
323 Eng. B6 SOHC	1989- 1994	1597	4	In Ex	MZVI780000 MZVX780000	38 x 7 x 103.6 32 x 7 x 102.7	C P	45-1 45-1
323 Familia MX-3 Eng. B6 16v	1989 1992- 1993	1597	4	In Ex	MZVI780001 MZVX780001	29.5 x 6 x 104 23.5 x 6 x 105	C P	45-1 45-1
323 Eng. ZL	1998	1498	4	In Ex	MZVI780003 MZVX780003	29.2 x 6 x 91.2 25.9 x 6 x 90.6	C P	45-1 45-1
MX-3 MX-5 Xedos 6 Eng. B6 DOHC	1996 1998 6/1994	1597 1598	4 4	In Ex	MZVI780004 MZVX780004	31.1 x 6 x 105.4 26.2 x 6 x 105.5	C P	45-1 45-1
Mazda 3 16v Eng. B6ZE	2003	1598	4	In Ex	MZVI780005 MZVX780005	29.2 x 5.5 x 97.1 25.9 x 5.5 x 96.6	C P	45-1 45-1
MX-6 Eng. FS	1993	1991	4	In Ex	MZVI830000 MZVX830000	31.5 x 6 x 89.8 27.6 x 6 x 90.1	C P	45-1 45-1
323 MX-5 Eng. BP	1994 1998	1840	4	In Ex	MZVI830001 MZVX830001	32.9 x 6 x 101.7 28 x 6 x 102	C P	45-1 45-1
323 626 Premacy MPV Engs. FP/FS	1998 1997 1999	1840 1991	4 4	In EX	MZVI830000 MZVX830000	31.5 x 6 x 89.8 27.6 x 6 x 90.1	C P	45-1 45-1
Mazda5 1.8 16v Mazda 6 1.8 16v Eng L8	2002 2003	1798	4	In Ex	FDVI830000 FDVX830000	32.5 x 5.5 x 103.4 28 x 5.5 x 104.6	C C	45-1 45-1
MX-6 Eng. KL	1993	2495	V6	In EX	MZVI845000 MZVX845000	32 x 6 x 94 27.6 x 6 x 95	C C	45-1 45-1

OE PART NUMBER	VALVE GUIDE PART NUMBER	GUIDE TYPE	MAT.	DIMENSIONS	OE PART NUMBER
B630-012111 B630-012121	01-2563 01-2563	A-1-6 A-1-6	G G	7.02 x 12.06 x 50 7.02 x 12.06 x 50	B6Y0-10-290 B6Y0-10-290
B541-12111 B541-12121	G11211 G11213	P-1 P-1-6	G1 G1	6.01 x 11.05 x 48.6 6.01 x 11.05 x 48.6	B6Z0-10-280 B6Z0-10-290
ZI02-12111 ZI02-12121	01-S2755 01-S2755	P-1-6 P-1-6	S03 S03	6.01 x 11.06 x 38 6.01 x 11.06 x 38	FSY1-10-280 FSY1-10-280
B657-12111 B6MC-12111 B695-122121B B660-12121 BJ01-12121	G11211 G11213	P-1 P-1-6	G1 G1	6.01 x 11.05 x 48.6 6.01 x 11.05 x 48.6	B6Z0-10-280 B6Z0-10-290
ZY01-12111A ZY01-12121					
FS01-12111B FS01-12111C FS01-12121A FS01-12121B					
BP06-12111 BP05-12111 BP4W-12111 BP05-12121A BP4W-12121	01-2571 01-2546	P-1 P-1-6	G1 G1	6.01 x 11.05 x 48.6 6.01 x 11.05 x 48.6	B6Z0-10-280 B6Z0-10-290
FS01-12111B FS01-12111C FS01-12121A FS01-12121B	01-S2755 01-S2755	P-1-6 P-1-6	S03 S03	6.01 x 11.06 x 38 6.01 x 11.06 x 38	FSY1-10-280 FSY1-10-280
	G11427 G11427	A-1 A-1	G G	5.5 x 11.05 x 39 5.5 x 11.05 x 39	
KL01-12111A KL01-12121					

MODEL	YEAR	CC	No. Cyls	IN/ EX	VALVE PART NUMBER	DIMENSIONS	MAT.	SA CG
Tribute Eng. YF	2002	1989	4	In Ex	MZVI848000 MZVX848000	32 x 6 x 97.1 28 x 6 x 96.7	C C	45-1 45-1
B1800 B2000 929 Engs. F8/FE	1982	1789 1998	4 4	In Ex	MZVI860000 MZVX860000	44 x 8.1 x 111.7 36 x 8.1 x 111.5	C C	45-1 45-1
B2200 626 MX-6 Inc. Turbo Eng. F2-12v	1991-96 1988-92	2184	4	In Ex	MZVI860001 MZVX860001	32.5 x 7 x 115.8 34 x 7 x 116.2	C C	45-1 45-1
Mazda 6 CX-7 16v T DISI Eng. MZR Turbo	2007	2261	4	In Ex	MZVI870000 MZVX870000	36 x 6 x 103.5 30 x 6 x 104.7		
Mazda 3 Mazda 5 Mazda 6 MPV Duratec-HE Engs. LF(2.0) L3(2.3)	2003	1999 2261	4 4	In Ex	FDVI875000 FDVX875000	35 x 5.5 x 103.4 30 x 5.5 x 104.6	C P	45-1 45-1
Tribute 3.0V6 24v Eng. AJ03	2003	2967	V6	In Ex	MZVI890000 MZVX890000	34.9 x 6 x 114.4 29.9 x 6 x 115.4	C C	45-3 45-3

OE PART NUMBER	VALVE GUIDE PART NUMBER	GUIDE TYPE	MAT.	DIMENSIONS	OE PART NUMBER
YF09-12111 YF09-12121	G3520 **CHECK DIMENSIONS FIRST** G3520 **CHECK DIMENSIONS FIRST**	A A	G1 G1	6.08 x 12.03 x 36 6.08 x 12.03 x 36	
F801-12111A F801-12121A F804-12121	01-1905 01-1905	A-1-6 A-1-6	G G	8.11 x 14.03 x 50.5 8.11 x 14.03 x 50.5	8173-23-090 8173-23-090
F201-12111 F202-12111 F201-12121 F201-12121A F201-12121B	01-2572 01-2572	A-6 A-6	G1 G1	7.02 x 12.08 x 53 7.02 x 12.08 x 53	F2Y1-23-091 F2Y1-23-091
L3K9-12111 L3K9-12121C					
LF01-12111 LF01-12121	G11427 G11427	A-1 A-1	G G	5.5 x 11.05 x 39 5.5 x 11.05 x 39	
AJ03-12111 AJ03-12121					

MODEL	YEAR	CC	No. Cyls	IN/ EX	VALVE PART NUMBER	DIMENSIONS	MAT.	SA CG
MAZDA DIESEL								
Mazda 3 1.6CDTi 16v Eng. Y6	2004	1560	4	In Ex	CTVI750001 CTVX750001	25.6 x 5.5 x 96.4 23.4 x 5.5 x 96.6	P P	45-3 45-3
Mazda 2 1.4CDTi Eng. FJ6A/B 8v (DV4TD)	2003	1398	4	In Ex	PGVI770000 PGVX770000	32.8 x 5.5 x 97.3 30.3 x 5.5 x 97.3	C P	45-3 45-3
B2000 B2200 Engs. RF/R2	1983	1998 2184	4 4	In Ex	MZVI860002 MZVX860002	41 x 8 x 106.9 36 x 8 x 106.8	P P	45-1 45-1
323 TD 626 TD Premacy Ditd Eng. RF2	1999	1998	4	In Ex	MZVI860003 MZVX860003	29.7 x 6 x 115.3 25.5 x 6 x 114.6	P P	45-1 45-1
Mazda 6 CD MPV TD Eng. RF5	2003	1998	4	In Ex	MZVI860004 MZVX860003	27.2 x 6 x 115.2 25.5 x 6 x 114.5	P P	45-1 45-1
Mazda 3 2.2TDi Mazda 6 2.2TDi CX-7 2.2TDi Eng. MRZ	2009	2184	4	In Ex	MZVI860005 MZVX860005	27.3 x 6 x 91.80 25.4 x 6 x 91.30		45-1 45-1
B2500 TDS MPV TD Eng. WL-12v	1998 1999	2499	4	In Ex	MZVI930000 MZVX930000	32.7 x 7 x 112 35.6 x 7 x 111.8	P P	45-1 45-1
BT-50 16V Bongo 2500 Eng. (WL16V)	2006 2005	2499 2978	4	In Ex	MZVI930001 MZVX930001	31 x 6 x 112 28 x 6 x 111.9	P P	45-1 45-1

OE PART NUMBER	VALVE GUIDE PART NUMBER	GUIDE TYPE	MAT.	DIMENSIONS	OE PART NUMBER
Y601-12111 Y601-12121	G11413 G11413	A1 A1	G G	5.5 x 9.54 x 34 5.5 x 9.54 x 34	
Y401-12111 Y401-12121	G11413 G11413	A1 A1	G G	5.5 x 9.54 x 34 5.5 x 9.54 x 34	
RF01-12111 RF01-12121B	01-2345 01.2346	A-1 A-1-6	G G	8.03 x 14.03 x 40.5 8.03 x 14.03 x 37.7	011-10-280 011-10-290
RF2A-12111 RF2A-12121	G11430 G11430	P P	G G	6.05 x 11.04 x 45 6.05 x 11.04 x 45	RFY1-10-291 RFY1-10-291
RF5C-12111 RF5C-12121 RF2A-12121	G11430 G11430	P P	G G	6.05 x 11.04 x 45 6.05 x 11.04 x 45	RFY1-10-291 RFY1-10-291
R2AA-12111 R2AA12121					
WL01-12111 WL51-12111 WL01-12121 WL51-12121A					
WE0112111 WE0112121					

MODEL	YEAR	CC	No. Cyls	IN/ EX	VALVE PART NUMBER	DIMENSIONS	MAT.	SA CG
MERCEDES								
A140 A160 Vaneo 1.6	1998	1397 1598	4 4	In Ex	MBVI800000 MBVX800000	40 x 6 x 103 34 x 7 x 102.7	C P	45-1 45-1
C180-230 E200 CLK/SLK200 Kompressor Engs,M271.	2003	1796	4	In Ex	MBVI820000 MBVX820000	30.5 x 7 x 105.4 27 x 7 x 109.2	C P	45-1 45-1
C180/200 16V Kompressor Eng. M271.950/952	2007	1796	4	In Ex	MBVI820001 MBVX820001	30.5 x 6 x 105.4 27 x 6 x 109.3	C P	45-3 45-3
190E/260E Eng. M103	1985	2599	4	In Ex	MBVI829000 MBVX829000	40 x 8 x 110.3 35 x 9 x 110.9	P P	45-1 45-1
A190 A210 Vaneo 1.6/1.9	1998	1898	4	In Ex	MBVI840000 MBVX840000	43 x 6 x 102.9 36 x 7 x 102.7	C P	45-1 45-1
A150 A170 A200	2004	1497 1698 2034	4 4 4	In Ex	MBVI840000 MBVX840001	43 x 6 x 102.9 35 x 7 x 102.7	C C	45-1 45-1
C180 Eng. MB111.920	1993-96	1799	4	In Ex	MBVI853000 MBVX853000	33 x 7 x 101.5 29 x 7 x 103.5	P P	45-3 45-3
C180 Eng. MB111.921	1996	1799	4	In Ex	MBVI853001 MBVX853001	32.9 x 7 x 101.5 29 x 7 x 103.5	P P	45-1 45-1
280, 280S 280E, 280SE/SL 280SE/SEL 280GE Engs. M110.920-924 M110.981-985 M110.987-988 M110.994	1972/80 1976/81 1984/89	2746	6	In Ex				
C230 Eng. M272.921 C280/R280/E280 Eng. M272.843/945/ 947	2007	2496 2996	V6 V6	In Ex	MBVI880002 MBVX880002	37 x 6 x 109.4 28 x 6 x 107.5	P P	45-3 45-3
300GE 300E 300SE/SEL/SL 300E/CE/TE Engs. M103	1989 1985	2960 2962	6 6	In Ex	MBVI885000 MBVX885000	43 x 8 x 110.3 39 x 9 x 110.9	P P	45-1 45-1

OE PART NUMBER	VALVE GUIDE PART NUMBER	GUIDE TYPE	MAT.	DIMENSIONS	OE PART NUMBER
1660530101 1660500327	G11057 G11039	F F	G-1 G-1	6 x 12.56 x 37.5 7.02 x 12.56 x 37.5	6060531229 6060530230
2710530001 2710500027	G11401 G11401 G11039	F F F	G G g	7 x 12.57 x 40 7 x 12.57 x 40 7 x 12.57 x 37.5	 1110531029
2710530501 2710530601 2710500627					
1030531601 1030532101 1030532301 1030501327	G3175 G3176	F-1 F-1	B B	8 x 14.04 x 42 9 x 14.04 x 48	1030500324 103050o724
1660530201 1660500427	G11057 G11039	F F	G-1 G-1	6 x 12.56 x 37.5 7 x 12.56 x 37.5	6060531229 6060530230
1660530201 2660530105 2660500027	G11057 G11039	F F	G-1 G-1	6 x 12.56 x 37.5 7 x 12.56 x 37.5	6060531229 6060530230
1110530401 1110500627	G11039 G11039	F F	G-1 G-1	7 x 12.56 x 37.5 7 x 12.56 x 37.5	6060530230 6060530230
1110531201 1110501327	G11039 G11039	F F	G-1 G-1	7 x 12.56 x 37.5 7 x 12.56 x 37.5	6060530230 6060530230
	01-1311 01-1309 01-2061	F-1 F-1 F-1	Cu Cu Cu	11 x 15.04 x 54 9 x 14.04 x 51.5 9 x 15.04 x 54	1100506524 1100505424 1100505924
2720530801 2720500927					
1030531301 1030532001 1030500527 1030501727	G3175 G3176	F-1 F-1	B B	8 x 14.04 x 42 9 x 14.04 x 48	1030500324 1030500724

MODEL	YEAR	CC	No. Cyls	IN/ EX	VALVE PART NUMBER	DIMENSIONS	MAT.	SA CG
190E 190, 190E 200T/E/GE 230GE Engs. M102	1990 1982-84 1984 1989	1797 1997 2298	4 4 4	In Ex	MBVI890000 MBVX890000	43 x 8 x 114.9 39 x 9 x 115.8	P P	45-1 45-1
300SE/SEL 24v Eng. M104 600SE/SEL/SEC Eng. M120	1991 1991	3199 5987	6 V12	In Ex	MBVI899000 MBVX899004	35 x 7 x 101.5 31 x 8 x 103.5	P P	45-1 45-1
250S Eng M108 200, 230, 250 Engs. M114/115/121/ 123/129/130/180	1966/69 1968/81	1988 2281 2292 2295 2307 2307 2778	4 4 6 4 4 6 6	In Ex				
E200/230 E280/320 C/CLK200/200K C/CLK230 SLK200/200K SLK230K V200/230/E200K C180SC/200SCK C230SC/Vito 113 Sprinter 214b-314 ML230 Engs. MB111 4v per cyl.	1995 1999 2001 2002	1998 2295 2799 3199	4 4 V6 V6	In Ex	MBVI899000 MBVX899000	35 x 7 x 101.5 31 x 7 x 103.5	P P	45-1 45-1
C240 18v E240 18v Eng. M112-914	1999 2002	2398	V6	In Ex	MBVI899001 MBVX899001	30 x 7 x 120.7 34 x 7 x 121.7	P P	45-1 45-1
C/CLK240 C/E/SL280 C/E/SL/SLK320 V280/M320 M430 Vito 119 G-Wagon Engs. 112912/915 113.940/1/2/3/4 3v per cyl.	1999	2597 2799 3199 4266	V6 V6 V6 V8	In Ex	MBVI899002 MBVX899002	36 x 7 x 119.5 41.1 x 7 x 122.3	P P	45-1 45-1

OE PART NUMBER	VALVE GUIDE PART NUMBER	GUIDE TYPE	MAT.	DIMENSIONS	OE PART NUMBER
1020500426/526 1020501601/801 1020530901/1801	G3089	F-1	B	8 x 14.04 x 46	1020508924
1020500027 1020500327	G3090	F-1	B	9 x 14.04 x 51	1020500562
1040531201 1040531401	G11042	F-1	B	7 x 13.53 x 35.5	1040505224
1040501027 1040501727	G11046	F-1	B	8 x 13.53 x 38	1040504724
	G2140	F-1	Cu	9 x 14.04 x 55	1300500124
	G2142	F-1	Cu	11 x 15.04 x 45	1080500524
1110531101	G11039	F	G-1	7 x 12.56 x 37.5	6060530230
1110501227 1110501427	G11039	F	G-1	7 x 12.56 x 37.5	6060530230
1130530001	GS11039	F	S03	7 x 12.56 x 37.5	6110530329
1130500127	GS11039	F	S03	7 x 12.56 x 37.5	6110530329
1130530101 1130530501	GS11039 G11060 G11039	F F F	S03 S03 G1	7 x 12.56 x 37.5 7 x 12.56 x 50 7 x 12.56 x 37.5	6110530329 6060530230
1130500227	GS11039 G11060 G11039 Check dimensions carefully	F F F	S03 S03 G1	7 x 12.56 x 37.5 7 x 12.56 x 50 7 x 12.56 x 37.5	6110530239 6060530230

MODEL	YEAR	CC	No. Cyls	IN/ EX	VALVE PART NUMBER	DIMENSIONS	MAT.	SA CG
C200/E200 200E/CE/TE C220/E220 220E/CE/TE C280/E280 S/SL280 280E/TE S/SL320 320E/CE/TE G320 Engs. MB111 4v per cyl.	1993 1992 1993 1992 1992	1998 2199 2799 3199	4 4 V6 V6	In Ex	MBVI899003 MBVX899003	35 x 7 x 101.5 31 x 7 x 103.5	P P	45-3 45-3
380SL/SE Engs. M116.960/961 M116.962/963	1980/86 1979/85	3818 3839	V8 V8	In Ex				
420SL Eng. M116.964 420SE/SEL Eng. M116.965 560SE Eng. M117.965	1986/89 1985/91 1985/91	4196 4973	V8 V8	In Ex				
280SE/300SEL 350SL/SE/SEL Engs. M116980-985 450SL/SEC/SEL 500SL/SE/SEL Engs. M117.960-965 982/983/986	1971	3499 4520 4950	V8 V8 V8	In Ex				
E420/S420 500SE/SL/SEL E500 E50AMG Engs. M119.960 M119.970-975 M119.985	1991/98 1989/92 1993/95 1996	4196 4973	V8 V8	In Ex				
208/210/308/310 /410 L408/409/410 LK408/409/410 O306B/410/510 230E/CE/TE 230GE 190E Eng. M102	1982 1980 1982 1986	2299	4	In Ex	MBVI955000 MBVX890000	46 x 8 x 115 39 x 9 x 115.8	P P	45-1 45-1
190E-16 Eng. M102- 983/990	1984-88 1989-90	2299 2498	4 4	In Ex	MBVI955001 MBVX955001	38 x 7 x 111.7 33 x 8 x 111.5	P P	45-1 45-1

OE PART NUMBER	VALVE GUIDE PART NUMBER	GUIDE TYPE	MAT.	DIMENSIONS	OE PART NUMBER
1110530201 1110530101 1110500527	G11039 G11039	F F	G1 G1	7 x 12.56 x 37.5 7 x 12.56 x 37.5	6060530230 6060530230
	G3181 G3083 G3183 G3363	F-1 F-1 F-1 F-1	B B B B	9 x 14.04 x 47.5 9 x 14.04 x 47.5 9 x 15.04 x 50.5 9 x 15.04 x 50.5	1160504724 1160503624 1160505324 1170500624
	G3181 G3183	F-1 F-1	Cu B	9 x 14.04 x 47.5 9 x 15.04 x 50.5	1160504724 1160505324
	G3181 G3083 G3183 01-1688 G3376	F-1 F-1 F-1 F-1 F-1	B B B B B	9 x 14.04 x 47.5 9 x 14.04 x 47.5 9 x 15.04 x 50.5 11 x 15.04 x 49 9 x 15.04 x 54	1160504724 1160503624 1160505324 1160504124 1100505924
	G11042 G11044 01-2429	F-1 F-1 F-1	B B B	7 x 13.53 x 35.5 7 x 13.53 x 40.5 9 x 13.53 x 38	1040505224 1040505724 1040502724
1020500326 1020530801 1020531501 1020531701 1020500027 1020500327	G3089 G3090	F-1 F-	B B	8 x 14.04 x 46 9 x14.04 x 51	1020508924 1020500562
1020531001 1020531401 1020500627 1020500827 1020501027	G3177 G3178	F-1 F-1	B B	7 x 13.04 x 45.5 8 x 13.04 x 43	1020504024 1020503724

MODEL	YEAR	CC	No. Cyls	IN/ EX	VALVE PART NUMBER	DIMENSIONS	MAT.	SA CG
MERCEDES DIESEL								
A160CDI A170CDI Vaneo 1.7CDI Engs. OM668.940/941	1998	1689	4	In Ex	MBVI800001 MBVX800001	29.6 x 6 x 105.2 24.6 x 7 x 105	P P	45-3 45-3
A Classe CDi C Classei CDi E Classe CDi ML CDi Vito CDI Viano CDI Engs. MB640.940 941/942. MB642. 910/920/921/930/ 960/961/990	2004 2006 2005 2006 2007 2006	1991 2987	4 V6	In Ex	MBVI800002 MBVX800002	28.5 x 6 x 102.3 25.4 x 6 x 102.3	P P	45-3 45-3
190D-200D/TD C200D/E200D 208/308/408/ 508D 250D/GD/TD 210/310/410D 300D/GD/TD 350GD G290 Eng. OM601 OM602 OM603	 1979-83 1993 1990 1984 1990 1985 1989	1997 2197 2299 2497 2874 2996 3449	4 4 4 5 5 6 6	In Ex	MBVI870000 MBVX870000	38 x 8 x 106.4 35 x 9 x 106.4	P P	45-1 45-1
C220D E300D Eng. OM604-910 OM606-910 4v per cyl.	1993	2155 2996	4 6	In Ex	MBVI870001 MBVX870001	29 x 6 x 105.4 26 x 6 x 105.7	P P	45-3 45-3
E220D C250D E250D E300TD OM605-910/912	1993-99	2497	5	In Ex Ex	MBVI870002 MBVX870002 MBVX870003	29 x 6 x 105.4 26 x 7 x 105.8 26 x 6 x 105.8	P P P	45-1 45-1 45-1
C200/220CDi E200/220CDi V220CDi C220CDI Sportcoupe C270CDi S320CDi M270CDi Vito 108/110 Sprinter 208/211 213/313/415/416 CDi OM611 OM612 OM613	1999 2000	2151 2685 3226	4 5 6	In Ex	MBVI880000 MBVX880000	30.1 x 7 x 104 28.4 x 7 x 104.4	P P	45-1 45-1

OE PART NUMBER	VALVE GUIDE PART NUMBER	GUIDE TYPE	MAT.	DIMENSIONS	OE PART NUMBER
6680530301 6680530101	G11048	F	B	6.01 x 11.56 x 47.5	6680530229
6680500127	G11051	F	B	7.01 x 11.56 x 47.5	6680530230
6420530401	G11398	F	G	6 x 11.56 x 34.5	
6420500527	G11398	F	G	6 x 11.56 x 34.5	
6010530201 6010530401 6010530201	G3091	F-1	G	8 x 14.03 x 39.5	6010500624
6010500227 6010500527 6010501227 6010501927 6010502127 6010502327	G3092	F-1	G	9 x 14.03 x 37.5	6010500924
6060530701	G3578	F	G-1	6 x 12.56 x 37.5	6060531229
6060530305	G3578	F	G-1	6 x 12.56 x 37.5	6060531229
6060531101	G3578	F	G-1	6 x 12.56 x 37.5	6060531229
6060501527 6060501127	G11039	F	G-1	7.02 x 12.56 x 37.5	6060530230
6060530705	G3578	F	G-1	6 x 12.56 x 37.5	6060531229
6110530101 6110530401	G11054	F	G	7 x 12.56 x 37.5	6110530329
6110530105 6110500127	G11054	F	G	7 x 12.56 x 37.5	6110530329

MODEL	YEAR	CC	No. Cyls	IN/ EX	VALVE PART NUMBER	DIMENSIONS	MAT.	SA CG
C200/220CDI E220/270/280/ 320CDI Vito 109/111/ 115 Sprinter 208-308 213/313/413 316/416/616 Engs. MB611.960/961/ 962/963/980/981 MB646.961/962/ 982/983 MB612.961/962/ 963/965/967 MB647.961 MB613.960/961 ML400CDI		2148 16V 2685 3226 24V 4000	4 5 6 V8	In Ex	MBVI880001 MBVX880001	28.7 x 7 x 104.1 26.2 x 7 x 104.5	P P	45-1 45-1
240D/TD O309D 406DG 407/507/510D 300D/GD/TD OM616 OM617	1973-79 1990	2399 2998	4 5	In Ex	MBVI909000 MBVX909000	39.8 x 10 x 131.5 34.2 x 10 x 131	C C	30-22 30-22
OM352	1969/77	5675	6	In Ex				
OM353 OM362 OM364 OM366	1975	5675 3972 5958	6 4 6	In Ex				
Atego 815/817 1217/1228 Vario 815 OM904LA 12v OM906LA 18v	1996	4247 6370	4 6	In Ex	MBVI102000 MBVX102000	33.9 x 8 x 125.9 37.9 x 8 x 152.5	P P	20-1 45-1
Atego 716/1017 1023 OM904LA 12v OM906LA 18v	1996	4247 6370	4 6	In Ex	MBVI102001 MBVX102000	34 x 8 x 128.7 37.9 x 8 x 152.5	P P	20-1 45-
OM401 OM402 OM403 OM407 OM421 OM422/442 OM423/443 OM427/447 OM441	1973	9600 12700 16000 11000 11000 14600 18300 12000 11300	6 V8 V10 6 6 V8 V10 6 6	In Ex				

OE PART NUMBER	VALVE GUIDE PART NUMBER	GUIDE TYPE	MAT.	DIMENSIONS	OE PART NUMBER
6280530001	GS11054	F	S03	7 x 12.56 x 37.5	6110530329
6280530005	GS11054	F	S03	7 x 12.56 x 37.5	6110530329
6160530201 6160530301 6170530001 6160500027 6160500127 6160500527 6170500027	G2133	A-1	G	10 x 14.03 x 60	6160530329
	G2136	A-1	G	10 x 14.03 x 48.5	6210533630
	G3514	A-1	G	9 x 15.03 x 72	3520531229
	G3515	A-1	G	10 x 15.03 x 67	3530532030
	G3514	A-1	G	9 x 15.03 x 72	3660530729
	G3515	A-1	G	10 x 15.03 x 67	3660530230
9060500226	G11335 G11455	F F	G-1 G-1	8 x 13.03 x 60 8 x 14.05 x 60	9060530129 9060530529
9060500327	G11335 G11455	F F	G-1 G-1	8 x 13.03 x 60 8 x 14.05 x 60	9060530129 9060530529
9060500326	G11335 G11455	F F	G-1 G-1	8 x 13.03 x 60 8 x 14.05 x 60	9060530129 9060530529
9060500326	G11335 G11455	F F	G-1 G-1	8 x 13.03 x 60 8 x 14.05 x 60	9060530129 9060530529
	G3080	F	G-1	12 x 18.04 x 67	4220530430
	G3080	F	G-1	12 x 18.04 x 67	4220530430

MODEL	YEAR	CC	No. Cyls	IN/ EX	VALVE PART NUMBER	DIMENSIONS	MAT.	SA CG
MITSUBISHI								
Colt Lancer Mirage Eng. 4G13/15 12v	1989	1299 1468	4 4	In In Ex	MIVI710000 MIVI710001 MIVX710000 (1 of each per cylinder)	30.9 x 6.6 x 100.9 26 x 6.6 x 100.7 33 x 6.6 x 101.2	C C C	45-1 45-1 45-1
Space Star 1.3 6v Eng. 4G13	1998	1299	4	In Ex	MIVI710002 MIVX710002	27 x 5.5 x 111.6 23.4 x 5.5 x 114.8	C C	45-1 45-1
Colt 1.2 12v Colt 1.3 16v Colt 1.5 16v Engs, 3A91, 4A90, 4A91	2004	1124 1332 1499	3 4 4	In Ex	MIVI750000 MIVX750000	30.4 x 5 x 89.5 25.4 x 5 x 90.9	C C	45-1 45-1
Space Star 1.6 16v Eng. 4G18	2004	1584	4	In Ex	MIVI760000 MIVX760000	29 x 5.5 x 115.5 25.4 x 5.5 x 114.7	C C	45-1 45-1
Colt 16v Carisma 16v Vista 4WD Expo 2/4WD Summit Engs. 4G92 4G93/4G93k	1993 1995 1992 1995	1597 1834	4 4	In Ex	MIVI810000 MIVX810000	30 x 6 x 110 27 x 6 x 113.5	C C	45-1 45-1
Carisma Space Star Pajero Pinin 2.0 Engs. 4G93/4G94 16v GDi	1999	1834 1999	4 4	In Ex	MIVI810001 MIVX810001	33 x 6 x 104.3 28.2 x 6 x 103.8	C C	45-1 45-1
Galant Lancer Starion L200 L300 Eng. G62/G63 4G63	1981 1982 1990	1795 1997	4 4	In Ex	MIVI850000 MIVX850000	43 x 8 x 109.8 35 x 8 x 108.7	P P	45-1 45-1

OE PART NUMBER	VALVE GUIDE PART NUMBER	GUIDE TYPE	MAT.	DIMENSIONS	OE PART NUMBER
MD128435	01-2166	F-6	G1	6.60 x 12.04 x 44	
MD128434	01-2166	F-6	G1	6.60 x 12.04 x 44	
MD139755 MD149314	01-2167	F-6	G1	6.60 x 12.04 x 49.5	
MD342090 MD342091					
MR984260	G11504	F	G	5.00 x 10.56 x 34.5	
MR984261	G11504	F	G	5.00 x 10.56 x 34.5	
MD339752 MD339754					
MD162799 MD162422	G11342	P	G	6 x 11.11 x 45.5	MD300702
MD162423	G11342	P	G	6 x 11.11 x 45.5	MD300702
MD162780	G11342	P	G	6 x 11.11 x 45.5	MD300702
MD162800	G11342	P	G	6 x 11.11 x 45.5	MD300702
MD070691	G3559	P	G	8.01 x 13.11 x 47	MD020551
MD070693 MD070694	G3560	P-6	G	8.01 x 13.11 x 52	MD020561

MODEL	YEAR	CC	No. Cyls	IN/ EX	VALVE PART NUMBER	DIMENSIONS	MAT.	SA CG
Colt Mirage & Turbo Eclipse Vista 4WD Galant Eng. 4G61/ 4G63 16v	1989 1990 1988-91 1990	1595 1997	4 4	In Ex	MIVI850001 MIVX850001	34 x 6.57 x 109.5 30.5 x 6.57 x 109.7	C C	45-1 45-1
Galant Carisma Sonata SpaceGear Space Runner Spacewagon Vista Engs. SOHC 16v 4G63K/G64FR/ 4G64K.	1993 1996 1991 1992 1999 1998 1989	1997 2351	4 4	In Ex	MIVI850002 MIVX850002	33 x 6 x 112.5 29 x 6 x 114	C C	45-1 45-1
Space Runner Eng. 4G64 DOHC 16v	1994	2397	4	In Ex	MIVI850003 MIVX850003	34 x 6.5 x 105.6 30.5 x 6.5 x 105.8	C C	45-1 45-1
Galant Shogun Sigma Eng. 6G72 12v	1988-95	2972	V6	In Ex	MIVI911001 MIVX911001	43 x 8 x 103.2 35 x 8 x 102.8	C C	45-1 45-1
3000GT Shogun Sigma Engs. 6G72D4 6G74 24v	1991 1995 1991-96	2972 3497	V6 V6	In Ex	MIVI911000 MIVX911000	34.9 x 6.5 x 106.3 30.5 x 6.5 x 105.5	C C	45-1 45-1

OE PART NUMBER	VALVE GUIDE PART NUMBER	GUIDE TYPE	MAT.	DIMENSIONS	OE PART NUMBER
MD127840 MD127847 MD127841 MD127848	G11215 G11216 G11218 G11219	P P P P	G G	6.6 x 12.06 x 45.5 6.6 x 12.10 x 45.5 6.6 x 12.06 x 50.5 6.6 x 12.10 x 50.5	 MD372791 MD372795
MD301193 MD159502 MD197097 MD199193 MD306183 MD303177	G11342 G11342	P P	G G	6 x 11.11 x 45.5 6 x 11.11 x 45.5	MD300702 MD300702
MD348769 MD348770	G11215 G11216 G11218 G11219	P P P P	G G	6.6 x 12.06 x 45.5 6.6 x 12.10 x 45.5 6.6 x 12.06 x 50.5 6.6 x 12.10 x 50.5	 MD372791 MD372795
MD088811 MD088812 MD096219	01-2143 01-2144	P-1 P-6	G-1 G-1	8 x 13.12 x 44 8 x 13.12 x 48	MD000461 MD000471
MD135479 MD172315 MD135481 MD135480 MD168241 MD183730 MD135482	01-2865 01-2866	P P	G G	6.6 x 12.07 x 51 6.6 x 12.08 x 51	

MODEL	YEAR	CC	No. Cyls	IN/ EX	VALVE PART NUMBER	DIMENSIONS	MAT.	SA CG
MITSUBISHI DIESEL								
Colt 1.5 D1-D Eng. Mb640	2004	1493	4	In Ex	MBVI800002 MBVX800002	28.5 x 6 x 102.3 25.4 x 6 x 102.3	P P	45-3 45-3
Carisma TD F8QT	1997	1870	4	In Ex	RNVI800003 RNVX800003	35 x 8 x 110.3 31.5 x 8 x 110.5	P P	45-1 45-1
Space Star Di-D/Di-DHP Eng. F9Q1	2002	1870	4	In Ex	RNVI800002 RNVX800002	35.1 x 7 x 110.8 32.6 x 7 x 110.7	P P	45-1 45-1
Space Wagon Eng. 4D68/T	1992	1998	4	In Ex	MIVI827000 MIVX827000	36 x 8 x 114.1 31.9 x 8 x 113.6	P P	45-1 45-1
Galant L300 Shogun Eng. 4D55/56 Inc turbo	1984	2346 2476	4 4	In Ex	MIVI911002 MIVX911002	40 x 8 x 136.5 34 x 8 x 136.5	P P	45-1 45-1
Space Gear Pajero L200 L300 Eng. 4D56/T	1995	2476	4	In Ex	MIVI911003 MIVX911003	39.8 x 8 x 130.1 34 x 8 x 129.9	P P	45-1 45-1
L200TD 16v 2.5Di-D Eng. 4D56U	12-2005	2477	4	In Ex	MIVI911004 MIVX911004	31.5 x 6 x 107.6 27.5 x 6 x 108	P P	45-1 45-1
Pajero/Shogun Eng. 4M40/T	1994	2835	4	In Ex	MIVI950000 MIVX950000	41 x 8 x 108.6 35 x 8 x 108.4	P P	45-1 45-1
Pajero/Shogun 16v Eng. 4M41	2000	3200	4	In Ex	MIVI985000 MIVX985000	33 x 6.5 x 115.5 30.9 x 6.5 x 115.4	P P	45-1 45-1

OE PART NUMBER	VALVE GUIDE PART NUMBER	GUIDE TYPE	MAT.	DIMENSIONS	OE PART NUMBER
MN960088 MN960089	G11398 G11398	F F	G G	6 x 11.56 x 34.5 6 x 11.56 x 34.5	
M889130 M852144 M889131 M852146	G3244 G3244	F F	B B	8 x 13.07 x 39 8 x 13.07 x 39	
MW30620685 MW30620686	G13600 G13600	F-1 F-1	B B	7 x 12.06 x 38.3 7 x 12.06 x 38.3	
MD173602 MD180356					
MD083657 MD083661 MD083659 MD083662	G3217 G3218	P P-6	G G	8 x 13.11 x 71 8 x 13.11 x 74	MD050523 MD050527
MD198404 MD198406	G3217 G3218	P P-6	G G	8 x 13.11 x 71 8 x 13.11 x 74	MD050523 MD050527
MN176597 MN176598					
ME200050 ME200051	G11001 G11001	P-6 P-6	G G	8 x 13.08 x 58 8 x 13.08 x 58	
ME203101 ME203102					

MODEL	YEAR	CC	No. Cyls	IN/ EX	VALVE PART NUMBER	DIMENSIONS	MAT.	SA CG
NISSAN								
Micra 1.0 MA10 1.2 MA12	1986/91	997 1235	4 4	In Ex				
Kubistar 1.2 8v Eng. D7F726	2003	1149	4	In Ex	RNVI690000 RNVX690000	32.9 x 6 x 106.8 29.8 x 6 x 106.7	P P	30-1 45-1
Kubistar 1.2 16v Eng. D4F712	2003	1149	4	In Ex	RNVI690001 RNVX690001	26 x 5.5 x 110.7 22 x 5.5 x 112.5	P P	45-3 45-3
Micra Engs. CG10DE / CG13DE 16v/ CGA3DE 16V	1992	998 1275 1348	4 4 4	In Ex	NSVI710000 NSVX710000	27.5 x 5.5 x 95.8 22.5 x 5.5 x 95.8	C C	45-1 45-1
Micra Engs. CR10DE / CR12DE / CR14DE 16v	2003	998 1240 1386	4 4 4	In Ex	NSVI710001 NSVX710001	27..4 x 5.5 x 97.8 22.5 x 5.5 x 97.9	C C	45-1 45-1
Almera 1.5 16v Eng. QG15DE	2004	1497	4	In Ex	NSVI736000 NSVX736000	29 x 5.5 x 94.4 24 x 5.5 x 94.7	C C	45-1 45-1
Prarie Sunny Engs. E10, E13, E15	1981	997 1290 1487	4 4 4	In Ex				
Almera Primera Serena Sunny Engs. GA14DE / GA16DE 16v	1995	1392 1597	4 4	In Ex	NSVI760000 NSVX760000	30 x 5.5 x 92.3 24 x 5.5 x 92.6	C C	45-1 45-1
Almera Eng. QG15DE 16v	2000	1497	4	In Ex	NSVI760001 NSVX760000	29.1 x 5.5 x 92.3 24 x 5.5 x 92.6	C C	45-1 45-1
Almera Almera Tino Primera Eng. QG18DE	2001	1769	4	In Ex	NSVI760000 NSVX760002	30 x 5.5 x 92.3 25 x 5.5 x 92.6	C C	45-1 45-1

E PART NUMBER	VALVE GUIDE PART NUMBER	GUIDE TYPE	MAT.	DIMENSIONS	OE PART NUMBER
	01-2172 01-2172	A A	G G	7 x 12.04 x 50 7 x 12.04 x 50	
13201-00QAG 13202-00QAH	G11232 G11232	A A	B B	6 x 11.07 x 45 6 x 11.07 x 45	
13201-00QAJ 13202-00QAK	G11238 G11238	A A	B B	5.5 x 11.07 x 40.5 5.5 x 11.07 x 40.5	
13201-99B10 13201-99B00 13202-99B10 13202-99B00	G11126 G11129	P P-6	G1 G1	5.50 x 9.51 x 42 5.50 x 9.51 x 44	
13201-1F700 13202-1F700	G11126 G11129	P P-6	G1 G1	5.50 x 9.51 x 42 5.50 x 9.51 x 44	
13201-BM505 13202-BM500	G3221 G3222	P P-6	G1 G1	5.50 x 9.51 x 40 5.50 x 9.51 x 40	13212-53Y60 13213-53Y60
	01-2175 01-2176	F f	G G	7.00 x 12.03 x 49 7 x 12.03 x 55	
13201-57Y00/53Y00 /4M500/4M700/2F000 /71J00 13202-53Y00/2F000 /71J00 /57Y00/53Y60	G3221 G3222	P P-6	G1 G1	5.50 x 9.51 x 40 5.50 x 9.51 x 40	13212-53Y60 13213-53Y60
13201-BM500 13202-53Y60	G3221 G3222	P P-6	G1 G1	5.50 x 9.51 x 40 5.50 x 9.51 x 40	13212-53Y60 13213-53Y60
13201-2F000 13202-9f600 13202-9f610 13202-0M200	G3221 G3222	P P-6	G1 G1	5.50 x 9.51 x 40 5.50 x 9.51 x 40	13212-53Y60 13213-53Y60

MODEL	YEAR	CC	No. Cyls	IN/ EX	VALVE PART NUMBER	DIMENSIONS	MAT.	SA CG
Micra 1.6 16v Note 1.6 16v Qashqai 1.6 16v Tiida 1.6 16v Eng. HR16DE	2002 2006 2005	1598	4	In Ex	NSVI780000 NSVX780000	31.1 x 5 x 101.77 25.4 x 5 x 102.3	P P	45-1 45-1
Kubistar 1.6 16v Engs. K4M 16v	2003	1598	4	In Ex	RNVI795001 RNVX795001	32.7 x 5.5 x 109.3 28 x 5.5 x 107.7	C P	45-1 45-1
Almera Primera Eng. QG18DE 16v	2004	1769	4	In Ex	NSVI800000 NSVX800000	30 x 5.5 x 94.3 25 x 5.5 x 94.7	C C	45-1 45-1
Qashqai 2.0 16v Sentra 2.0 16v X-Trail 2.0 16v Eng. MR20DE	2006 2007 2008	1997	4	In Ex	NSVI840000 NSVX840000	33.9 x 5.5 x 106.3 27.7 x 5.5 x 105.2	P P	45-1 45-1
Bluebird Silvia, Sunny Engs. Z20/22/24	1979	1952 2200 2400	4 4 4	In Ex	NSVI850001 NSVI850003 NSVX850001 NSVI850003	42 x 8 x 124.4 42 x 8 x 126.5 38 x 8 x 125.4 38 x 8 x 127.5	C C	45-5 45-5
Serena Sunny Primera 200SX Engs. SR20DI/DE 16v	1990	1998	4	In EX Ex	NSVI860000 NSVX860000 (85bhp) NSVX860001 (110bhp)	34 x 6 x 101.5 30 x 6 x 102.5 30.1 x 7 x 102.5	P P P	45-1 45-1 45-1
Almera Almera Tino Primera X-Trail Engs. SR20DE 16v, QR20DE	2000	1998	4	In EX	NSVI860002 NSVX860002	34.1 x 6 x 98.4 30 x 6 x 99.3	C C	45-1 45-1
Primera X-Trail Engs. QR20DE QR25DE	2003	1998 2498	4 4	In EX	NSVI890000 NSVX890000	35.6 x 6 x 97.2 30.7 x 6 x 98.8	P C	45-1 45-1
Altima/Previa Eng. KA24DE	1993	2389	4	In Ex	NSVI890001 NSVX890001	36.6 x 7 x 101.3 31.3 x 7 x 89.8	P P	45-1 45-1

OE PART NUMBER	VALVE GUIDE PART NUMBER	GUIDE TYPE	MAT.	DIMENSIONS	OE PART NUMBER
13201-ED00A 13202-ED00C	G11464 G11466	P-1 P-1-6	G G	5 x 9.05 x 42.2 5 x 9.05 x 42.2	
	G11238 G11238	A A	B B	5.5 x 11.07 x 40.5 5.5 x 11.07 x 40.5	770010915 7700109151
	G3221 G3221	P P-6	G1 G1	5.50 x 9.51 x 40 5.50 x 9.51 x 40	13212-53Y60 13213-53Y60
13201-EN20A 13202-EN200					
13201-N8501 13201-W0401 13201-Y8780 13202-N8500 13202-W0401 13202-W8780	01-2352 01-2357	A1 A1-6	G G	8.01 x 12.23 x 67.5 8.01 x 12.23 x 67.5	13212-W0510 13212-W0510
13201- 89J00/53J00/70J00 / 1E700/1E710 13202- 70J10/64Y00/64Y02 /89 JOO 13202-70J00 13202-53J02	G3434 G11132 G11146 N/A	P P-6 P-6	G1 G1 G1	6.01 x 10.03 x 43 6.01 x 10.03 x 43 6.01 x 11.03 x 43	
13201-2F200 13201-2J201 13202-2F210 13202-2J201	G3434 G11132 G11146	P P-6 P-6	G1 G1 G1	6.01 x 10.03 x 43 6.01 x 10.03 x 43 6.01 x 11.03 x 43	
13201-BH300 13202-6N200	G11431 G11432	P P-6	G G	6.01 x 10.03 x 41.8 6.01 x 10.03 x 44	13212-BP360 13213-6N260
13201-53F02 13202-53F00					

MODEL	YEAR	CC	No. Cyls	IN/ EX	VALVE PART NUMBER	DIMENSIONS	MAT.	SA CG
NISSAN DIESEL								
Almera Kubistar Micra Note Qashqai Tiida Eng. K9K	2003 2006 2007	1461	4	In Ex	RNVI760000 RNVX760000	33.4 x 6 x 101 28.9 x 6 x 100.8	P P	45-3 45-3
Micra Eng. TUD5	1998	1527	4	In Ex	CTVI770000 CTVX770000	37 x 7 x 108.5 31.5 x 7 x 108.2	P P	45-1 45-1
Primera 1.9DCi Interstar 1.9DCi Primestar 1.9DCi Eng. F9Q	2003 2005	1870	4	In Ex	RNVI800002 RNVX800002	35.3 x 7 x 110.9 32.6 x 7 x 110.7	P P	45-1 45-1
Cabstar Pickup Urvan Forklift Engs. SD23, SD25	1980	2289 2488	4 4	In Ex				
Primastar Qashqai X-Trail 2.0DCi Eng. M9R-M1D	2007	1995	4	In Ex	RNVI840000 RNVX840000	27.7 x 6 x 103.9 26 x 6 x 103.8		45-3 45-3
Almera Primera Eng. CD20	1995 1991	1974	4	In Ex	NSVI845000 NSVX845000	39.1 x 7 x 99.7 32.1 x 7 x 99.6	P P	45-1 45-1
Patrol Eng. RD28-T	1989	2826	6	In Ex	NSVI850000 NSVX850000	39 x 7 x 101.8 32 x 7 x 101.6	P P	45-5 45-5
Patrol Eng. RD28-T	>1988	2826	6	In Ex	NSVI850001 NSVX850001	39 x 7 x 102.8 32 x 7 x 102.6	P P	45-5 45-5

OE PART NUMBER	VALVE GUIDE PART NUMBER	GUIDE TYPE	MAT.	DIMENSIONS	OE PART NUMBER
13201-BN700	G11308	F	B	6 x 11.07 x 40.5	
13202-BN700	G11308	F	B	6 x 11.07 x 40.5	
13201-6F900	G3555	F	B	7 x 13.07 x 40.2	13212-6F900
13202-6F900	G3555	F	B	7 x 13.07 x 42.8	13213-6F900
13201-AW300 13201-00QAC 13201-00QAM	G31600	F-1	B	7 x 12.06 x 35.3	
13202-AW300 13202-00QAN	G31600	F-1	B	7 x 12.06 x 35.3	
	01-2179	A2-6	G	8 x 12.03 x 52	13211-V1700
	01-2179	A2-6	G	8 x 12.03 x 52	13211-V1700
13201-00QOA	G11523	F	B	6 x 11.06 x 42.4	
13202-00QOA	G11523	F	B	6 x 11.06 x 42.4	
13201-60J03 13201-60J04	G3430	F	G	7 x 11.03 x 45	
13202-60J02	G11139	F-6	G	7 x 11.03 x 48	
13201-22J10/J11 13201-OY000	G3430	F	G	7 x 11.03 x 45	
13202-40L00 13202-40L01	G3432	F-6	G	7 x 11.03 x 45	
13201-22J00/01 13201-22301	G3430	F	G	7 x 11.03 x 45	
13202-V7202 13202-V2703	G3430	F-6	G	7 x 11.03 x 45	

MODEL	YEAR	CC	No. Cyls	IN/ EX	VALVE PART NUMBER	DIMENSIONS	MAT.	SA CG
Almera Almera Tino Primera X-Trail Eng. YD22ETi Navvara Pathfinder Eng. YD25DDTI	2001 2003 2003 2006	2184	4	In Ex	NSVI860003 NSVX860003	28.2 x 6 x 106.7 26.2 x 6 x 106.4	P P	45-1 45-1
Serena Vanette Cabstar Eng. LD23	1998	2283	4	In Ex	NSVI870000 NSVX870000	41.5 x 8 x 118 33.1 x 8 x 117.6	P P	45-1 45-1
Interstar 2.2 DCi Eng. G9T.700/710/720 Primestar 2.5 DCi Eng. G9U	2004	2188 2463	4 4	In Ex	RNVI870001 RNVX870001	30.7 x 6 x 123.2 29.5 x 6 x 122.9	P C	45-3 45-3
Alteon 3.0 TDi Patrol 4.2 Terrano Terrano 2 Cabstar Engs. TD27T, BD30TI, TD42	1989	2663 2953 4196	4 4 6	In Ex	NSVI960000 NSVX960000	43.5 x 8 x 117 38 x 8 x 117	P P	45-1 45-1
Patrol 3.0 Di Interstar 3.0Di Terrano 3.0 DTi Engs ZD30Ti/ DDTi	2001 2004 2002	2953	4	In Ex	NSVI960001 NSVX960001	32 x 7 x 113.5 30 x 7 x 113.4	C C	45-1 45-1

OE PART NUMBER	VALVE GUIDE PART NUMBER	GUIDE TYPE	MAT.	DIMENSIONS	OE PART NUMBER
13201-BN300 13201-AD210	G11350	P-1	G	6.00 x 10.04 x 59.8	13212-AD260
13202-BN300 13202-AD200	G11348	P-1	G	6.0 x 10.04 x 44.2	13213-AD260
13201-9C600	01-2779	A-6	G-1	8.01 x 12.04 x 59.1	
13202-9C601	01-2779	A-6	G-1	8.01 x 12.04 x 59.1	
13201-00QAD	G11356	F	B	6 x 11.05 x 50	
13202-00QAD	G11356	F	B	6 x 11.05 x 50	
13201-43G01 13201-G2403	G3564	A-2-6	G	8 x 12.03 x 47	13212-54T00
13202-31NO1/51N00 13202-G2403/7F400	G3564	A-2-6	G	8 x 12.03 x 47	13212-54T00
13201-2W200 13201-00QAL	G11346	F-6	G	7 x 11.04 x 45	
13202-2W200 13202-00QAM	G11346	F-6	G	7 x 11.04 x 45	

MODEL	YEAR	CC	No. Cyls	IN/ EX	VALVE PART NUMBER	DIMENSIONS	MAT.	SA CG
OPEL/ VAUXHALL								
Ascona Corsa Kadett Manta Engs. C12NZ/ X12SZ/ C14NZ/ 14NV	1979 1982 1979	1196 1297 1389	4 4 4	In Ex	OPVI720000 OPVX720000	33 x 7 x 104.6 29 x 7 x 104.6	P P	45-1 45-1
Corsa 1.0 Nova 1.0 Eng. 10s	88-92	993	4	In Ex	OPVI720001A OPVX720001A Inlet & exhaust valve	32 x 7 x 98.9 27 x 7 x 99.4 have narrow grooves		45-1 45-1
Agila Astra Corsa Engs. X10XE-12v/ X12XE-16v / Z14XEP	2001 2004 1999	973 1195 1389	3 4 4	In Ex	OPVI725000 OPVX725000	28 x 5 x 93.8 25.4 x 5 x 93.8	C C	45-3 45-3
Agila 1.0 12v Eng. K10B Agila 1.2 16v Eng K12B	2007	996 1242	3 4	In Ex	SZVI730000 SZVX730000	27.47 x 5.5 x 87.5 22.9 x 5.5 x 87.06		45-1 45-1
Astra Corsa Eng. C14SE	1991	1389	4	In Ex	OPVI776000 OPVX776000	38 x 7 x 104.6 31 x 7 x 104.6	C C	45-1 45-1
Astra Combo Corsa Meriva Tigra Vectra Zafira Engs,16v X14XE/ X14XE C16XE/ X16XE /X16XEL/ Y16XE/ Z16XE	1993 1999 1993 2002 1991 1993 1999	1364 1389 1598	4 4	In Ex	OPVI790000 OPVX790000	31 x 6 x 103.1 27.5 x 6 x 102.2	C C	45-3 45-3
Astra 8v Corsa 8v Vectra 8v Eng. 16SV/ C16NZ/ E16SE/ E16NX/ X16SZR	1991 1989 1987	1598	4	In Ex	OPVI790003 OPVX790003	38 x 7 x 101.1 31 x 7 x 101.1	P P	45-1 45-1
Insignia 1.6 16v Engs. Z16XER/ XEP, A16XER/ LET **GPL ENGINE**	2008	1598	4	In Ex	OPVI790004A OPVX790004A	31.2 x 5 x 113.9 27.5 x 5 x 113.2 Material is different to Petrol equivalent.	C C	45-3 45-3

OE PART NUMBER	VALVE GUIDE PART NUMBER	GUIDE TYPE	MAT.	DIMENSIONS	OE PART NUMBER
641002 90323519 641302	G2800 G2800	A A	G G	7.02 x 11.04 x 45.8 7.02 x 11.04 x 45.8	
642675 642837	G2800 G2800	A A	G G	7 x 11.04 x 45.8 7 x 11.04 x 45.8	
641045 641051 641354 641364	G13598 G13598	F F	G G	5 x 10.05 x 39 5 x 10.05 x 39	9158569 9158569
4708925 9319374 4708933 93193762	G11508 G11508	P-2 P-2	G G	5.5 x 10.57 x 34 5.5 x 10.57 x 34	4709231 4709231
641015 641317	G2800 G2800	A A	G G	7 x 11.04 x 45.8 7 x 11.04 x 45.8	
641034 641340	G3511 GS3511 (special alloy) G3511 GS3511 (special alloy)	F F F F	G-1 S06 G-1 S06	6.00 x 10.05 x 45 6.00 x 10.05 x 45	
642679 90295011 642854 90295015	G2800 G2800	A A	G G	7 x 11.04 x 45.8 7 x 11.04 x 45.8	
641100 642029	GS11479 GS11479	F F	SO06 SO06	5 x 10.03 x 37 5 x 10.03 x 37	

MODEL	YEAR	CC	No. Cyls	IN/ EX	VALVE PART NUMBER	DIMENSIONS	MAT.	SA CG
Ascona Carlton Cavalier Kadett Rekord Manta Engs. 16N/S/H, 19E/N/S, 20E/N/S	1975/86	1598 1897 1997	4 4 4	In Ex				
Astra Corsa Meriva Vectra Zafira Eng. Z14-XE X18XE1/ Z18XE 16v	2000 2002 2000	1364 1796	4 4	In Ex	OPVI805000 OPVX805000	31.2 x 5 x 101.3 27.4 x 5 x 100.8	C C	45-3 45-3
Astra 16v Vectra 16v Zafira 16v Twinport Eng. Z16XEP/ Z16XE1/Z16XER Insignia 1.6 16v Eng. A16XER/ A16LET	2004 2006 2005 2008	1598	4	In Ex	OPVI805001 OPVX805001	31.2 x 5 x 117.2 27.5 x 5 x 116.2	C C	45-3 45-3
Astra 16v Vectra Zafira Twinport Eng. Z18XEP/XER Astra 1.6T 16v Eng. Z16LET	2004	1796 1598	4	In Ex	OPVI805002 OPVX805002	31.2 x 5 x 113.9 27.5 x 5 x 113.2	C C	45-3 45-3
Vivaro 2.0 16v Eng. F4R	2001	1998	4	In Ex	RNVI827004 RNVX827004	33.4 x 5.5 x 110.7 28.9 x 5.5 x 108.9	C P	45-1 45-1
Ascona Cavalier Kadett Manta Engs. 18E/N/S, 18NE/NV	1982/86	1796	4	In Ex				

OE PART NUMBER	VALVE GUIDE PART NUMBER	GUIDE TYPE	MAT.	DIMENSIONS	OE PART NUMBER
	01-1954 01-2258	A B	G G	9.02 x 12.75 x 60.9 9 x 12.75 x 67	
641048 641357	G13598 G13598	F F	G G	5 x 10.05 x 39 5 x 10.05 x 39	9158569 9158569
642011 641379	G11598 G11479 G11598 G11479 Check sizes	F F	G G G G	5 x 10.03 x 39 5 x 10.03 x 37 5 x 10.03 x 39 5 x 10.03 x 37	9158569 642014 9158569 642014
641076 641391	G11479 G11479	F F	G G	5 x 10.03 x 37 5 x 10.03 x 37	642014 642014
7701471279 7701473101 7701471280	G11238 G11238	A A	B B	5.5 x 11.07 x 40.6 5.5 x 11.07 x 40.6	7700109151 7700109151
	01-2259 01-2181 01-2259 01-2181	A-1 A-1 A-1 A-1	G G G G	8 x 12.02 x 43 12.03 8 x12.02 x 43 12.03	

MODEL	YEAR	CC	No. Cyls	IN/ EX	VALVE PART NUMBER	DIMENSIONS	MAT.	SA CG
Astra/Calibra Carlton/Cavalier Frontera Omega Vectra Engs. C18-C20 NE/NV/SE/SHE/ SV	1986	1796 1998	4 4	In Ex	DWVI860000 DWVX860000	41.8 x 7 x 103.6 36.5 x 7 x 103.4	C C	45-1 45-1
Astra GSi Calibra inc Turbo Vectra Engs. C20LE/ LET/ XE/ 20XE - XEJ 16v	1988 1990 1991	1998	4	In Ex	OPVI860001 OPVX860001	33 x 7 x 104.9 29 x 7 x 105	P P	45-3 45-3
Astra Calibra Corsa Frontera Omega Sintra Vectra Zafira Eng.s C18-XE/ XEL/X18XE X20-SE/XE/XEV X22XE-Y22XE- Y26SE-X25XE- X30XE	1994 1999	1796 1998 2198 2498 2961	4 4 4 V6 V6	In Ex	OPVI860000 OPVX860000	32 x 6 x 102.1 29 x 6 x 92.3	P P	45-3 45-3
Signum Turbo Zafira Engs. Z20 Z22SE	2003	1998 2198	4 4	In Ex	OPVI860002 OPVX860002	35.1 x 6 x 102.2 30.1 x 6 x 100.9	C C	45-3 45-3
Insignia 2.0T 16v Eng. A20NHT	2008	1998	4	In Ex	OPVI860003 OPVX860003	27.7 x 5 x 114.4 24.33 x 5 x 114.4		45-3 45-3
Frontera Monterey Eng. 6VD1	2001 1998	3165	V6	In Ex	OPVI970000 OPVX970000	33.9 x 6 x 103.8 29 x 6 x 103.5	C C	45-1 45-1

OE PART NUMBER	VALVE GUIDE PART NUMBER	GUIDE TYPE	MAT.	DIMENSIONS	OE PART NUMBER
642667 642829 641306	G13598 G13598	F F	G G	5 x 10.05 x 39 5 x 10.05 x 39	9158569 9158569
642758 90281714 642858 90281715	G3594 01-S2593 G3594 01-S2593	F-1 F-1 F-1 F-1	G-1 S06 G-1 S06	7 x 13.03 x 41 7 x 13.03 x 41	
641022 641325 641331	G3511 GS3511 (special alloy) G3530 (Some 1.8) G3511 GS3511 (special alloy) G3530 (Some 1.8 & X20SE/XEV)	F F F F F F	G-1 S06 G-1 G-1 S06 G-1	6 x 10.05 x 45 6 x 10.05 x 35 6 x 10.05 x 45 6 x 10.05 x 35	
641063 641066 641376 641380	G11379 G11379	F-1 F-1	G G	6 x 10.04 x 36 6 x 10.04 x 36	
641464 641465	G11509 G11509	A A	G G	46.8 x 5 x 10 46.8 x 5 x 10	641463 641463
641049 641357					

MODEL	YEAR	CC	No. Cyls	IN/ EX	VALVE PART NUMBER	DIMENSIONS	MAT.	SA CG
OPEL/VAUXHALL	**DIESEL**							
Agila 16v Corsa 16v Eng. Fiat Multi-jet	2004	1248	4	In Ex	FTVI730000 FTVX730000	21.7 x 6 x 109.2 21.7 x 6 x 109.2	P P	45-3 45-3
Corsa 1.3 CDTi Engs. A13DTC/ DTE Z13DTE/DTR	2010	1248	4	In Ex	FTVI730001 FTVX730001	22.45 x 6 x 109.2 22.5 x 6 x 109.2		45-3 45-3
Astra Corsa Vectra Engs. 4EC1/T 4EE1/T	1987	1686	4	In Ex	OPVI790001 OPVX790001	34.6 x 7 x 104.1 30.6 x 7 x 104	P P	45-1 45-1
Astra Corsa Meriva Engs.Y17DT Z17DTH 16v	2001 2004	1686	4	In Ex	OPVI790002 OPVX790002	27.4 x 6 x 98.5 26.5 x 6 x 98.1	P P	45-1 45-1
Astra 17CDTi Corsa 17CDTi Meriva 17CDTi Engs. A17DTR, Z17DTR	2007	1686	4	In Ex	OPVI790005 OPVX790005	27.4 x 6 x 102.6 25.45 x 6 x 102.4	P P	45-1 45-1
Vivaro F9Q-DCi	2004	1870	4	In Ex	RNVI800002 RNVX800002	35.3 x 7 x 110.9 32.6 x 7 x 110.7	P P	45-1 45-1
Omega Eng. M51 D25 BMW	1993	2497	6	In Ex	BMVI800002 BMVX800002	39.9 x 6 x 103.7 30.9 x 6 x 103.6	P P	45-1 45-1
Astra CDTi 16v Signum CDTi 16v Vectra CDTi 16v Eng. Z19DTH	2004	1910	4	In Ex	ARVI820000 ARVX820000	27.8 x 6 x 114.4 25.8 x 6 x 114.4	P P	45-3 45-3
Astra H TD 16v Signum TD 16v Vectra C TD 16v Zafira B TD 16v Eng. Z19DTH	2005	1910	4	In Ex	ARVI820001 ARVX820001	28 x 5 x 114.4 Ret to S/E 4.9mm 24.5 x 5 x 114.4 Ret to S/E 5.9mm		45-3 45-3
Astra 2.0 CDTi Insignia 2.0 CDTi Zafira 2.0 CDTi Engs. A20DTC- DTH-DTJ-DTR	2010	1956	4	In Ex	ARVI820001 ARVX820001	28 x 5 x 114.4 Ret to S/E 4.9mm 24.5 x 5 x 114.4 Ret to S/E 5.9mm		45-3 45-3
Astra Signum Vectra 1.9JTD 8v	2001	1910	4	In Ex	FTVI820004 FTVX820004	35.5 x 8 x 115 34.5 x 8 x 115	P P	45-3 45-3
Astra Vecta Eng. X17DTL/16D	1982	1598 1699	4 4	In Ex	OPVI825000 OPVX825000	36 x 8 x 123.2 32 x 8 x 123.2	C C	45-1 45-1

OE PART NUMBER	VALVE GUIDE PART NUMBER	GUIDE TYPE	MAT.	DIMENSIONS	OE PART NUMBER
641072 641071	G11310 G11310	F F	G G	6.02 x 10.03 x 43 6.02 x 10.03 x 43	
641475 642052 641101	G11310 G11310	F F	G G	6.02 x 10.03 x 43 6.02 x 10.03 x 43	
641000 641007 641044 641300 641322	G3230 G3230	P-1 P-1	G G	7.02 x 11.54 x 43 7.02 x 11.54 x 43	
641025 641369	G11251 G11251	F F	G G	6 x 11.06 x 42.3 6 x 11.06 x 42.3	
641085 641086	G11251 G11251	F F	G G	6 x 11.06 x 42.3 6 zx 11.06 x 42.3	
4402633 4415921 4402634/4415922	G13600 G13600	F-1 F-1	B B	7 x 12.06 x 38.3 7 x 12.06 x 38.3	
641041 641346	G13599 G13599	F F	B B	6 x 12.55 x 39.5 6 x 12.55 x 39.5	
641073 641074 641385 641386	G11302 G11302	F F	S06 S06	6.02 x 11.03 x 47 6.02 x 11.03 x 47	
641464 641465 641106	G11481 G11481	F-1 F-1	G G	5 x 10.03 x 46.7 5 x 10.03 x 46.7	
641464 641465 641106	G11481 G11481	F-1 F-1	G G	5 x 10.03 x 46.7 5 x 10.03 x 46.7	
	G11000 G11000	F F	G-1 G-1	8.02 x 14.03 x 43 8.02 x 14.03 x 43	
642651 641345 641353/642818	G2947 G2947	A-1 A-1	G G	8 x 12.05 x 50 8 x 12.05 x 50	

MODEL	YEAR	CC	No. Cyls	IN/ EX	VALVE PART NUMBER	DIMENSIONS	MAT.	SA CG
Antara 2.0CDTi Engs. Z20DM/ DMT	2007	1991	4	In	OPVI830000	28.5 x 6 x 95.7		45-3
Insignia 2.0CDTi Engs. A20DTC/ DTJ/DTH/DTR	2010			Ex	OPVX830000	24.4 x 6 x 95.7		45-3
Asrta Frontera Omega Signum Vectra Zafira Engs. X20DTL/ DTH-Y20/22DTH/ DTR	1998 2001	1995 2175	4 4	In	OPVI840000	29 x 6 x 97.1	P	45-3
				Ex	OPVX840000	26 x 6 x 97.1	P	45-3
Vivaro 2.0 DCi Eng. M9R	2006	1995	4	In	RNVI840000	27.7 x 6 x 103.9		45-3
				Ex	RNVX840000	26 x 6 x 103.8		45-3
Vivaro Movano Engs. G9T-720/722 GU9T-720	2004	2188 2463	4 4	In	RNVI870001	30.6 x 6 x 123.2	P	45-3
				Ex	RNVX870001	29.5 x 6 x 123	C	45-3
Signum Vectra Eng, Y30DT	2003	2958	V6	In	OPVI875000	27.4 x 6 x 98.5	P	45-1
				Ex	OPVX875000	26.5 x 6 x 98.1	P	45-1
Carlton Frontera Omega Engs. 2.3YD/YDT/DTR	1986	2260	4	In	OPVI920000	42 x 8 x 127.2	P	45-1
				Ex	OPVX920000	34.5 x 8 x 127.2	P	45-1
Frontera TD 4JB1-T	1993	2772	4	In	IZVI930000	40.1 x 8 x 118.1	P	45-1
				Ex	IZVX930000	35.7 x 8 x 118.1	P	45-1
Monterey 3.0TD Eng. 4JX1	1998	3000	4	In	IZVI954001	33 x 7 x 98.2	P	45-1
				Ex	IZVX954001	33 x 7 x 98.1	P	45-1
Monterey TD Bravo Eng. 4JG2T	1992	3059	4	In	IZVI954000	42.1 x 8 x 117.6	P	45-1
				Ex	IZVX930000	35.7 x 8 x 117.6	P	45-1
Movano 2.8TDi	1998	2798	4	In	FTVI930000	41 x 8 x 121	P	30-1
				Ex	FTVX930002	36 x 8 x 122	p	45-1
Movano 3300/3500 Eng. 3.0CDTi	2004	2953	4	In	NSVI960001	32 x 7 x 113.5	C	45-1
				Ex	NSVX960001	30 x 7 x 113.4	C	45-1

OE PART NUMBER	VALVE GUIDE PART NUMBER	GUIDE TYPE	MAT.	DIMENSIONS	OE PART NUMBER
4805321/96951454 96440147 4817388 96951455					
642165 642168 642208 642211	GS3511 (special alloy) GS3511 (special alloy)	F F	S06 S06	6.01 x 10.05 x 45 6.01 x 10.05 x 45	
	G11523 G11523	F F	B B	6 x 11.06 x 42.4 6 x 11.06 x 42.4	
4506083 4506084	G11356 G11356	F F	B B	6 x 11.05 x 50 6 x 11.05 x 50	
641067 641380	G11503 G11503	P-1 P-1	G G	6 x 11.05 x 42 6 x 11.05 x 42	642060 642060
642659 642759 642200/642868 642882/642935	01-2184 01-2184	B B	G G	8 x 13.04 x 56 8 x 13.04 x 56	
641042 641352	01-2149 01-2149	A-1-2 A-1-2	G G	8.00 x 14.03 x 50.3 8.00 x 14.03 x 50.3	
7301820 99432837	G2713 G2713	F F	G-1 G-1	8.03 x 13.03 x 56 8.03 x 13.03 x 56	4749395 4749395
4415247 4415246	G11346 G11346	F-6 F-6	G G	7 x 11.04 x 45 7 x 11.04 x 45	

MODEL	YEAR	CC	No. Cyls	IN/ EX	VALVE PART NUMBER	DIMENSIONS	MAT.	SA CG
PERKINS Prima 65 Prima 80TD	 1987	 1994	 4	 In Ex				
3.152 6.305	1953 1959	2500 5000	3 6	In Ex				
4.107 4.108 4.99	1961 1958/73	1753 1759 1622	4 4 4	In Ex				
4.154 4.165	1969 1976	2500 2710	4	In Ex				
4.203, D	1959	3330	4	In Ex				
4.212 4.236 4.248 6.354 6.372/372.4 T4.40 Turbo T6.60 Turbo	1960 1960 1969 1960 1974 1986 1986	3475 3867 4065 5800 6097 3990 5985	4 4 4 6 6 4 6	In Ex				
G3.152 G4.203		2500 3300	3 4	In Ex				
P3 3.144 P4 4.192 P6 6.244	1945/66	2400 3100 4700	3 4 6	In Ex				
T4.236 Turbo	1988	3860	4	In Ex				
V8.510 V8.540 V8.640	1974 1974 1976	8400 8800 10500	V8	In Ex				

OE PART NUMBER	VALVE GUIDE PART NUMBER	GUIDE TYPE	MAT.	DIMENSIONS	OE PART NUMBER
	01-1975 01-1975	A-1 A-1	G G	7.46 x 12.06 x 39 7.46 x 12.06 x 39	L343FF01 L343FF01
	01-0378 01-0377	C-6 A-6	G G	7.94 x 12.72 x 66 7.98 x 12.74 x 62	0420002 33261723
	01-1350 01-1351 01-0377	A A A-6	G G G	7.98 x 12.75 x 54 7.98 x 12.75 x 62.3 7.98 x 12.74 x 62	33261742 33261722 33261723
	01-1350 01-1753 01-1350 01-1753	A F A F	G G G G	7.98 x 12.75 x 54 8 x 13.05 x 54 7.98 x 12.75 x 54 8 x 13.05 x 54	33261742 3313E004 33261742 3313E004
	01-0377 01-0377	A-6 A-6	G G	7.98 x 12.74 x 62 7.98 x 12.74 x 62	33261723 33261723
	01-0934 01-0935	F F-6	G G	9.52 x 15.92 x 58 9.52 x 15.92 x 61.2	33261732 3343J002
	01-1755 01-1755	A A	G G	7.99 x 12.74 x 57.1 7.99 x 12.74 x 57.1	33261725 33261725
	01-0378 01-0378	C-6 C-6	G G	7.94 x 12.72 x 66 7.94 x 12.72 x 66	0420002 0420002
	01-2336 01-2336	F F	G G	9.52 x 15.90 x 58 9.52 x 15.90 x 58	3343F002 3343 f002
	01-1298 (510 66-72) 01-0937 01-1298 (510 66-72) 01-0937	F F F F	G G G G	9.53 x 15.93 x 68.5 9.52 x 15.92 x 66 9.53 x 15.93 x 68.5 9.52 x 15.92 x 66	 33431503 33431503

MODEL	YEAR	CC	No. Cyls	IN/ EX	VALVE PART NUMBER	DIMENSIONS	MAT.	SA CG
PEUGEOT								
106 205 Engs. TU9A/9K C1A	1991 1986	954 1124	4 4	In Ex	PGVI700000 PGVX700000	34.7 x 7 x 112.8 27.7 x 7 x 112.6	P P	30-1 45-1
104 204 205 Engs XV3, 5, 8	1972 1972/87	954	4	In Ex				
107 1.0i 12v Eng. 1KR-FE	2006	998	3	In Ex	TYVI710002 TYVX710002	27.5 x 5 x 88.5 23.6 x 5 x 89.1		45-1 45-1
106 205 206 306 307 309 Engs. TU1/ TU1K-MZ/ TU3/TU3S/ TU3F2/ TU3M/ TU3MC/ TU32K/ TU3JP	1991 1987 2000 1993 2001 1987	1124 1360	4 4	In In Ex	PGVI720000 PGVI720001 PGVX720000	36.7 x 7 x 112.8 36.7 x 7 x 112.8 29.2 x 7 x 112.6	P C P	30-1 45-1 45-1
104 205 Engs. XW3, Xw7, XY7, XZ5	1975/87	1124 1294	4 4	In Ex				
204 304 305 Engs, XK5, XL5	1975	1294	4	In Ex				
106 206 306 Engs. TU3F-J2K/ TU2J2/ TU5J2/ TU5JP	1991 2001 1999	1294 1361 1578	4 4 4	In In Ex	PGVI750000 PGVI750001 PGVX750000	39.4 x 7 x 111.7 39.4 x 7 x 111.7 31.3 x 7 x 111.5	C C P	30-3 45-3 45-3
307 1.4 16v Eng. ET3J4	2004	1360	4	In Ex	PGVI750002 PGVX750002	28.3 x 5.5 x 100.8 24.3 x 5.5 x 101.1	C C	45-3 45-3
207/208 308 3008 Eng.EP3C/EP6C	2007	1397 1598	4	In Ex	BMVI770001 BMVX770001	30 x 5 x 97 25.1 x 5 x 110.8		45-3 45-3
106 206 307, Partner Eng. TU5JP4 16v	2001	1587	4	In Ex	PGVI785001 PGVX785000	31.2 x 6 x 103.7 24.4 x 6 x 104.2	C C	45-1 45-1

OE PART NUMBER	VALVE GUIDE PART NUMBER	GUIDE TYPE	MAT.	DIMENSIONS	OE PART NUMBER
094857	G3159	F	G	7 x 13.06 x 47.5	022059
094958	G3159	F	G	7 x 13.06 x 47.5	022059
	01-0944	A	G	8.01 x 13.04 x 55	7700636514
	01-0944	A	G	8.01 x 13.04 x 55	7700636514
0948.E2	G11364	P-1	G	34.5 x 5 x 9.74	0221.28
0949.C8	G11364	P-1	G	34.5 x 5 x 9.74	0221.28
094858	G3159	F	G	7 x 13.06 x 47.5	022059
0960401801 094891	G3159	F	G	7 x 13.06 x 47.5	022059
094959	G3159	F	G	7 x 13.06 x 47.5	022059
	G2976	F-1	G	8.01 x 13.07 x 47.5	0220-51
	G2976	F-1	G	8.01 x 13.07 x 47.5	0220-51
	01-1411	F-1	G	8.01 x 14.05 x 51	0220-40
	01-1411	F-1	G	8.01 x 14.05 x 51	0220-40
094865 094873	G3454	F	B	7 x 13.07 x 48.5	022084
094893	G3454	F	B	7 x 13.07 x 48.5	022084
094970	G3454	F	B	7 x 13.07 x 48.5	022084
0948C8	G11495	A	B	5.5 x 10.57 x 38	
0949C4	G11495	A	B	5.5 x 10.57 x 38	
0948F9	G11524	A	B	5.01 x 9.05 x 41	
0949F6	G11526	A	B	5.01 x 9.05 x 44.5	
0948A9	G11259	F	B	6 x 11.06 x 40	022095
0949A8	G11259	F	B	6 x 11.06 x 40	022095

MODEL	YEAR	CC	No. Cyls	IN/ EX	VALVE PART NUMBER	DIMENSIONS	MAT.	SA CG
207/208 308 3008/5008 Eng.EP6DTS	2007	1587	4	In Ex	PGVI785002 PGVX785002	28.8 x 5 x 105.7 26 x 5 x 110.1	C C	45-3 45-3
208/308/RCZ Eng. EP6CDTX	2006	1587	4	In Ex	PGVI785003 PGVX785002	29.7 x 5 x 95.1 26 x 5 x 110.1	C C	45-3 45-3
205/302 306 309 405 406 Expert Engs. XU5M/2C/ XU5JP/ XU7JP XU9-2C/JA	1985 1993 1987 1987 1998	1580 1761 1905	4 4 4	In EX	PGVI830002 PGVX830002	41.6 x 8 x 108.8 34.5 x 8 x 108.4	P P	45-1 45-1
406 407 607 Eng. EW7J4 16v	2000 2004	1749	4	In Ex	PGVI830003 PGVX830003	29.8 x 6 x 106 27.3 x 6 x 104	P P	45-1 45-1
406 2.0 16v HPI Eng. RLZ (EW10J4)	2001	1998	4	In Ex	PGVI850001 PGVX850001	32.4 x 6 x 105.1 29.2 x 6 x 102.7	C C	45-1 45-1
404, 504, 505 J7, J9 Engs. XB5, XC5/6/7, XM1, XM7, XNA, XN1,	1966	 1472 1618 1796 1971	 4 4 4 4	In Ex				
306 405 Engs. XU9J4/ XU10J4/ XU10J4TE **4MM TIP-1ST COLLET GROOVE**	1993 1992	1905 1998	4 4	In Ex	PGVI860000 PGVX860000	34.6 x 7 x 106.4 29.6 x 7 x 105.8	P P	45-3 45-3
306 405 605 806 Engs. XU102C/ XU10J2-CTE	1993 1992 1989 1994	1998	4	In Ex	PGVI860001 PGVX860001	42.6 x 8 x 108.8 34.5 x 8 x 108.4	P P	45-3 45-3
106 306 406 Eng. XU7JP4/ XU10J4R-7360>	1998 1999	1761 1998	4 4	In Ex	PGVI860003 PGVX860003	34.6 x 6 x 106.3 29.6 x 6 x 105.7	P P	45-1 45-1
106 306 406 Eng. XU7JP4/ XU10J4R->7360	1995	1761 1998	4 4	In Ex	PGVI860007 PGVX860003	34.1 x 6 x 106.4 29.6 x 6 x 105.7	C P	45-1 45-1

OE PART NUMBER	VALVE GUIDE PART NUMBER	GUIDE TYPE	MAT.	DIMENSIONS	OE PART NUMBER
0948E8 0949E2	G11524 G11526	A A	B B	5.01 x 9.05 x 41 5.01 x 9.05 x 44.5	
0948G4 0949E2	G11524 G11526	A A	B B	5.01 x 9.05 x 41 5.01 x 9.05 x 44.5	
094856 094957	G3239 G3241	F-3 F	B B	8.01 x 13.07 x 38.7 8.01 x 13.07 x 45	022064 022072
0948A4 0949A4	G11315 G11317	F F	B G	6 x 12.07 x 40 6 x 12.07 x 40	02130.12 02130.13
0948A7 0948C6 0949A7 0949C2	G11315 G11317	F F	B G	6 x 12.07 x 40 6 x 12.07 x 40	02130.12 02130.13
	01-0942 01-0942	F F	G G	8.01 x 14.05 x 55 801 x 14.05 x 55	0220-25 0220-25
094861 094962 094977	G3536 G3536 (TE Only) G3538	F-3 F-3 F	B B B	7 x 12.07 x 40 7 x 12.07 x 40 7 x 12.07 x 40	022073 022073 022019
094866 094972 094976	G3340 G3344	F F	B B	8.01 x 13.07 x 43.6 8.01 x 13.07 x 50.6	022085 022121
094892 0949A6	G11158 G11159	P P	B S06	6 x 12.06 x 40.8 6 x 12.065 x 40.8	022125 022124
094882 0949A6	G11158 G11159	P P	B S06	6 x 12.06 x 40.8 6 x 12.065 x 40.8	022125 022124

MODEL	YEAR	CC	No. Cyls	IN/ EX	VALVE PART NUMBER	DIMENSIONS	MAT.	SA CG
206 307 406 806 Expert Eng. EW10J4 16v	1999 2002 2000	1997	4	In Ex	PGVI860004 PGVX860004	33.3 x 6 x 106.1 28.9 x 6 x 103.6	C P	45-1 45-1
106 306 406 605 Engs. XU7JP4/ XU10J4R >7359 **3MM TIP-1ST COLLET GROOVE**	1995	1761 1998	4 4	In Ex	PGVI860005 PGVX860005	34.6 x 7 x 106.4 29.6 x 7 x 105.8	P P	45-3 45-3
406 607 Eng. EW12J4	2000	2231	4	In Ex	PGVI860006 PGVX860006	35.1 x 6 x 106 30.9 x 6 x 102.9	C P	45-1 45-1
306 Eng. XU10J4RS	1997	1998	4	In Ex	PGVI860007 PGVX860007	34.1 x 6 x 106.4 30.7 x 6 x 105.3	C C	45-1 45-1
Boxer 330 Eng. XU10J2	2000	1998	4	In Ex	PGVI860008 PGVX830002	41.6 x 8 x 109.3 34.5 x 8 x 108.4	P O	45-1 45-1
406 3.0 12v 605 3.0 12v	1996 1997/99	2946	V6	In Ex				
406 3.0 24v **407 3.0 24v** **607 3.0 24v** **807 3.0 24v** **Eng. ES9J4S/ ES9A**	2000 2004 2001	2946	V6	In Ex	PGVI870000 PGVX870000	35 x 6 x 108.4 30.5 x 6 x 106.9	P P	45-1 45-1

OE PART NUMBER	VALVE GUIDE PART NUMBER	GUIDE TYPE	MAT.	DIMENSIONS	OE PART NUMBER
094899 194999	G11352 G11352	F F	B B	6 x 12.07 x 41 6 x 12.07 x 41	
094875 094981	G3538 G3538	F F	B B	7 x 12.07 x 40 7 x 12.07 x 40	022119 022119
0948A1 0949A2	G11352 G11352	F F	B B	6 x 12.07 x 41 6 x 12.07 x 41	
094882 094987	G11159 G11159	P P	S06 S06	6 x 12.065 x 40.8 6 x 12.065 x 40.8	022124 022124
0948A6 094957	G3340 G3344	F F	B B	8.01 x 13.07 x 43.6 8.01 x 13.07 x 50.6	022085 022121
	G11259 G11259	F F	B B	6.00 x 11.06 x 40 6.00 x 11.06 x 40	
0948.A5 0949.A5	G11259 G11259	F F	B B	6.00 x 11.06 x 40 6.00 x 11.06 x 40	

MODEL	YEAR	CC	No. Cyls	IN/ EX	VALVE PART NUMBER	DIMENSIONS	MAT.	SA CG
PEUGEOT DIESEL								
206 HDi 307 HDi 407 HDi Eng. DW6TED4	2004	1560	4	In Ex	CTVI750001 CTVX750001	25.6 x 5.5 x 96.4 23.4 x 5.5 x 96.6	C P	45-3 45-3
106 1.4D Engs. TUD3/Y K9A/K9Y	92-96	1361	4	In Ex	CTVI750000 CTVX750000	35.5 x 7 x 108.4 30.6 x 7 x 108.2	P P	45-1 45-1
207, 308 HDi 16v 3008, 5008 HDi Eng. DV6ATED4	2009	1560	4	In Ex	CTVI750002 CTVX750002	25.6 x 5.5 x 96 23.5 x 5.5 x 96.2	P P	45-1 45-1
207 1.6 8v HDi Eng. DV6DTED	2009	1560	4	In Ex	CTVI750003 CTVX750003	30.2 x 5.5 x 95.5 27.5 x 5.5 x 95.5	P P	45-1 45-1
106 Eng. TUD5	1994	1527	4	In Ex	CTVI770000 CTVX770000	37 x 7 x 108.4 31.5 x 7 x 108.2	P P	45-1 45-1
206 307 Eng. DV4TD	2001	1398	4	In Ex	PGVI770000 PGVX770000	32.8 x 5.5 x 97.3 30.3 x 5.5 x 97.3	C P	45-3 45-3
407 24v TDi 607 24v TDi Eng. DT17TED4	2006	2720	V6	In Ex	PGVI810000 PGVX810000	27.7 x 6 x 97.1 25.2 x 6 x 96.4	P p	45-3 45-3
205 305 309 405 Engs. XUD7/ XUD9	1983	1769 1905	4 4	In Ex	PGVI830000 PGVX830001	38 x 8 x 112.5 33 x 8 x 112	P P	30-1 45-1
205/206/305 306/309 405/406 Boxer Expert Partner Engs. XUD9TE/ TF-DW8	1983	1868 1905	4 4	In Ex	PGVI830001 PGVX830001	38.5 x 8 x 112.3 33 x 8 x 112	P P	45-1 45-1
206/306 307 406 806/807 Expert Engs. DW10TD/ DW10ATED	1999 2002 1999	1997	4	In Ex	PGVI850000 PGVX850000	35.6 x 6 x 107.1 33.8 x 6 x 107.1	P P	45-3 45-3

OE PART NUMBER	VALVE GUIDE PART NUMBER	GUIDE TYPE	MAT.	DIMENSIONS	OE PART NUMBER
0948C7	G11413	A1	G	5.5 x 9.54 x 34	
0949C3	G11413	A1	G	5.5 x 9.54 x 34	
0948.69	G3332	F	B	7 x 13.07 x 40.2	
0949.71	G3336	F	B	7 x 13.07 x 43	
0948G1	G11413	A1	G	5.5 x 9.54 x 34	
0949F7	G11413	A1	G	5.5 x 9.54 x 34	
0948F7	G11413	A1	G	5.5 x 9.54 x 34	
0949F5	G11413	A1	G	5.5 x 9.54 x 34	
094874	G3555	F	B	7 x 13.07 x 40.2	
094980	G3555	F	B	7 x 13.07 x 40.2	
0948C2	G11413	A1	G	5.5 x 9.54 x 34	
0949B1	G11413	A1	G	5.5 x 9.54 x 34	
0948E1					
0949C6					
094846	G3234 to 1986	A	B	8.01 x 14.06 x 50	022055
	01-2103			14.09	
	01-2104			14.24	
094947	01-2290 1986 on	A	B	8.01 x 14.06 x 52	
094960	GS3528 Step type	F	B	8.01 x 14.05 x 48	
094964					
	G3234 to 1986	A	B	8.01 x 14.06 x 50	022055
	01-2103			14.09	
	01-2104			14.24	
	G3163 1986 on	A	B	8.01 x 14.06 x 52	
	GS3528 Step type	F	B	8.01 x 14.05 x 48	
094859	GS3528 XUD9TE/F	F	B	8.01 x 14.05 x 48	
094863	01-S2674 DW8	F	S06	8.01 x 14.06 x 48	0220A0
094894					
094973					
094974					
	GS3528 XUD9TE/F	F	B	8.01 x 14.05 x 48	
	01-S2674 DW8	F	S06	8.01 x 14.06 x 48	0220A0
094895	01-S2676 >8393	F	S06	6 x 12.06 x 42.5	
	01-S2750 8394>	A	S06	6.01 x 10.06 x 41.5	0220A2
094996	01-S2676 >8393	F	S06	6 x 12.06 x 42.5	
	01-S2750 8394>	A	S06	6.01 x 12.06 x 41.5	0220A2

MODEL	YEAR	CC	No. Cyls	IN/ EX	VALVE PART NUMBER	DIMENSIONS	MAT.	SA CG
307/406 806/807 Expert Eng. DW10AT-ED4 Euro 3	2001 1999 1999 2002 2000	1997	4	In Ex	PGVI850003 PGVX850003	29.9 x 6 x 106.2 25 x 6 x 106.2	P P	45-3 45-3
308/3008 5008/RCZ ENG. RHE/RHF DV10CTED4	2009	1997	4	In Ex	PGVI850005 PGVX850002	27.3 x 6 x 104.5 25 x 6 x 104.9	P P	45-3 45-3
406 607 807 Eng. DW12TED4	2000 2002	2179	4	In Ex	PGVI850002 PGVX850002	29.8 x 6 x 105 25 x 6 x 104.9	P P	45-3 45-3
407 2.2HDi 607 2.2HDI 4007 2.2HDI ENG. DW12BTED4 (4HT)	2006 2007	2179	4	In Ex	PGVI850004 PGVX850004	27.2 x 6 x 95.8 25 x 6 x 95		45-3 45-3
406 605 806 Eng. XUD11A/ XUD11ATE-BTE 12v	1995 1989 1997	2088 2138	4 4	In Ex	PGVI860002 PGVX860002	33.9 x 8 x 122.3 33.9 x 8 x 121.9	P P	45-3 45-3
404 504 505 604 J7, J9 Engs. XD88/90, XDP90, XD2/2S, XD3/3P/3T	1969 1973 1980 1980 1968 1980	1948 2112 2304 2498	In Ex					
605 Boxer Engs. DJ5/ DJ5T/ DK5ATE 12v	1999 1995	2446	4	In Ex	PGVI920000 PGVX920000	36.9 x 7 x 127.8 36.9 x 7 x 127.5	P P	45-3 45-3
Boxer Eng. DJ5TED 8v	1997	2446	4	In Ex	PGVI920001 PGVX920001	41 x 7 x 115.6 37.7 x 7 x 115.4	P P	45-3 45-3
Boxer 310 Eng. 8140.63 Non-turbo	2001	2798	4	In Ex	FTVI930002 FTVX930002	43.4 x 8 x 121.7 35.9 x 8 x 122	P P	30-1 45-1
Boxer 310 Eng. 8140.23/43 Turbo-intercooled	2001	2798	4	In Ex	FTVI930000 FTVX930002	40.8 x 8 x 120.7 35.9 x 8 x 122	P P	30-1 45-1
Boxer 3.0HDi 16v Eng. F1CE0481	2006	2999	4	In Ex	FTVI958000 FTVX958000	32.4 x 6 x 120 32.4 x 6 x 119.95		30-3 30-3

OE PART NUMBER	VALVE GUIDE PART NUMBER	GUIDE TYPE	MAT.	DIMENSIONS	OE PART NUMBER
0948C0 0949A	G11319 G11319	A A	S06 S06	6 x 10.06 x 41.5 6 x 10.06 x 41.5	0220A2 0220A2
0948F6 0949F1 0949A3	GS11319 GS11319	A A	S06 S06	6 x 10.06 x 41.5 6 x 10.06 x 41.5	0220A2 0220A2
0948A3 0949A3	GS11319 GS11319	A A	S06 S06	6 x 10.06 x 41.5 6 x 10.06 x 41.5	0220A2 0220A2
0948E5 0949.E1	GS11319 GS11319	A-1 A-1	S06 S06	6 x 10.06 x 41.5 6 x 10.06 x 41.5	0220.A2 0220.A2
094868 094969	G3513 G3513	F F	B B	8.01 x 13.07 x 54.5 8.01 x 13.07 x 54.5	
	01-0943 01-0943	A A	G G	8.51 x 14.05 x 55 8.51 x 14.05 x 55	0220-16 0220-16
094872 094979 094993	G3566 G3566	F F	B B	7.01 x 13.05 x 54 7.01 x 13.05 x 54	022093 022093
094884 094990	01-2672 01-2672 Some models may use	F F G3566	B B	7.01 x 13.07 x 43.1 7.01 x 13.07 x 43.1	
094896 0949A0	G2713 G2713	F F	G-1 G-1	8.03 x 13.03 x 56 8.03 x 13.03 x 56	
0948A2 0949A0	G2713 G2713	F F	G-1 G-1	8.03 x 13.03 x 56 8.03 x 13.03 x 56	
504072531 504081062	G11388 G11388	A A	G G	6 x 10.05 x 49 6 x 10.05 x 49	500388426 500388426

MODEL	YEAR	CC	No. Cyls	IN/ EX	VALVE PART NUMBER	DIMENSIONS	MAT.	SA CG
PORSCHE 911 930	1964	2000 2200 2700 3000 3200 3300	4 4 6	In Ex				
928 944	1977	4500 4700	V8	In Ex				
914	1969	1800	4	In Ex				

OE PART NUMBER	VALVE GUIDE PART NUMBER	GUIDE TYPE	MAT.	DIMENSIONS	OE PART NUMBER
	01-0530 01-0530	A A	Cu Cu	9 x 13.05 x 51 9 x 13.05 x 51	93010432100 93010432100
	01-2186 01-2186	F F	B B	9 x 13.06 x 40 9 x 13.06 x 40	92810432802 92810432802
	01-1478 01-1482	B B	B B-6	7.99 x 12.06 x 61 8.98 x 13.06 x 66.5	021101403a 021101417a

MODEL	YEAR	CC	No. Cyls	IN/ EX	VALVE PART NUMBER	DIMENSIONS	MAT.	SA CG
RENAULT								
Clio Kangoo Twingo Eng. D7F	1998	1149	4	In Ex	RNVI690000 RNVX690000	32.9 x 6 x 106.8 29.8 x 6 x 106.7	P P	30-1 45-1
Clio Kangoo Modus Twingo Eng. D4F-16v	2001 2004 2001	1149	4	In Ex	RNVI690001 RNVX690001	26 x 5.5 x 110.7 22 x 5.5 x 112.5	P P	45-3 45-3
Clio 1 R5 GL, GTL R4 GTL, GTP R9/1 C, GTC, TCE Engs. C1E, C1E.700/750	1991/98 1976 1998 1976	1108 1149 1108	4 4 4	In Ex	RNVI700000A RNVX715000A	33.5 x 7 x 89.5 29 x 7 x 89	P P	45-1 45-2
R5 TL, GTL,GTS R9 GTL, TSE R11 TL R18 TL R19 TR, GTR Engs. C1G, C1J, C2J	1984 1987 1984 1988	1237 1397	4 4	In Ex	RNVI715000A RNVX715000A	34 x 7 x 91.5 29 x 7 x 89	P P	45-1 45-2
R19TS/TSE/GTS Clio, Express Kangoo Megane Engs. C3J/ E5F/ E7F/ E6J/ E7J/ K7M	1988 1990	1171 1390 1598	4 4 4	In Ex	RNVI758000 RNVX758000	37.5 x 7 x 107.8 33.6 x 7 x 107.8	P P	30-1 45-1
5GT Turbo Eng. C1J-760/782/788	1985	1397	4	In Ex	RNVI760001 RNVX760001	34 x 7 x 90.5 29 x 7 x 89	C C	45-2 45-2
Clio Laguna Megane Scenic Engs. K4J/ K4M 16v	1999	1390 1598	4 4	In Ex	RNVI795001 RNVX795001	32.7 x 5.5 x 109.3 28 x 5.5 x 107.7	C P	45-1 45-1
Clio RT R5 R9, 11 R19 R21 Trafic Engs. F1N, F2N, F2R, F3N	1990 1985 1984 1988 1986 1987	1721	4	In Ex	RNVI810000A RNVX810000A	38.1 X 8 X 111.5 32.5 X 8 X 111.3		30-1 45-1
R19 Clio Eng. F7P 16v	1988 1990	1764	4	In Ex	RNVI820000 RNVX820000	30.7 x 7 x 107.5 28.6 x 7 x 108.3	P P	45-1 45-1

OE PART NUMBER	VALVE GUIDE PART NUMBER	GUIDE TYPE	MAT.	DIMENSIONS	OE PART NUMBER
7701469266 7701469269	G11232 G11232	A A	B B	6 x 11.07 x 45 6 x 11.07 x 45	
7701472986 7701473004	G11238 G11471 G11238 G11471	A F A F	B B B B	5.5 x 11.07 x 40.5 5.5 x 11.07 x 40.5 5.5 x 11.07 x 40.5 5.5 x 11.07 x 40.5	7700109151 7700109151
7701458180 7701460690 7701461802	G2571 G2571	A-12 A-12	G G	7 x 11.15 x 41.5 7 x 11.15 x 41.5	0710939000 0710939000
7701462137 7701461802	G2571 G2571	A-12 A-12	G G	7 x 11.15 x 41.5 7 x 11.15 x 41.5	0710939000 0710939000
7700853390 7701465088 7701465090 7700865934	G3466 G3454 (E7J Energy only) G3470 G3454 (E7J Energy only)	F F	B B	7.01 x 12.06 x 42 7 x 13.07 x 48 7.01 x 12.06 x 49 7 x 13.07 x 48	
7700690577 7701462385 7700677772	G2571 G2571	A-12 A-12	G G	7 x 11.15 x 41.5 7 x 11.15 x 41.5	0710939000 0710939000
7701471378 7701472124 7701471379 7701473354 7701473355	G11238 G11238	A A	B B	5.5 x 11.07 x 40.5 5.5 x 11.07 x 40.5	7700109151 7700109151
7701463081 7700713788 7701463082 7700713790	G2997 G3001	A A	G G	8.02 x 13.14 x 40 8.02 x 13.14 x 49	7701452333 0710942500
7701465172 7701465173	G3590 G3590	F F	B B	7.01 x 12.06 x 39.2 7.01 x 12.06 x 39.2	7700743529 7700743529

MODEL	YEAR	CC	No. Cyls	IN/ EX	VALVE PART NUMBER	DIMENSIONS	MAT.	SA CG
R19 Clio Laguna Engs. F3P-678-720-724/ F3R722-723	1992 1991 1993	1794 1995 1998	4 4 4	In Ex	RNVI827000 RNVX827000	40.1 x 8 x 107.1 32.7 x 8 x 106.9	P P	45-1 45-1
Laguna Megane Engs, F3P670-674/ F3R728-729	1993 1996	1794 1998	4 4	In Ex	RNVI827001 RNVX827001	40 x 8 x 115.6 32.5 x 8 x 115.3	P P	45-1 45-1
Megane Williams Clio Eng. F7R-710 16v	1996 1994	1998	4	In Ex	RNVI827002 RNVX827002	33 x 7 x 107.3 28.3 x 7 x 108.8	C P	45-1 45-1
Laguna Safrane Eng. N7Q 16v	1995 1996	1998	4	In Ex	RNVI827003 RNVX827003	31 x 7 x 104.1 27 x 7 x 103.5	C C	45-3 45-3
Clio/Espace Laguna/Megane Scenic/Trafic Vel Satis Engs. F4P/ F4R 16v	1998	1783 1998	4 4	In Ex	RNVI827004 RNVX827004	33.4 x 5.5 x 110.7 28.9 x 5.5 x 108.9	C P	45-1 45-1
Laguna 16v Megane 16v Eng. F5R.740	2001	1998	4	In Ex	RNVI827005A RNVX827005A	31.5 X 5.5 X 113.5 27.3 X 5.5 X 114		45-1 45-1
Laguna 2.0 16v Megane 2.0 16v Eng. M4R	2007 2008	1997	4	In Ex	NSVI840000 NSVX840000	33.9 x 5.5 x 106.3 27.7 x 5.5 x 105.2	P P	45-1 45-1
R21/25 Espace Safrane Engs. J7R/-734-735-754 / J7T-760-761 12v	1984 1988 1986 1992 1986	1995 2165	4 4	In In Ex	RNVI880000 RNVI880001 RNVX880000	36.4 x 7 x 111.8 30.4 x 7 x 111.9 40.1 x 7 x 112	P P P	45-1 45-1 45-1
R25 & Turbo Espace Laguna Safrane Eng. Z7W	1987 1991 1993 1992	2458 2849 2963 2975	V6 V6 V6 V6	In Ex	RNVI910000 RNVX910000	46 x 8 x 112.6 38.6 x 8 x 111.4	C P	45-1 45-1
Espace Grand Espace Vel-satis Eng. V4Y711 24v	2004	3497	V6	In Ex	RNVI955000 RNVX955000	37.1 x 6 x 96.4 31.4 x 6 x 94	C C	45-1 45-1

OE PART NUMBER	VALVE GUIDE PART NUMBER	GUIDE TYPE	MAT.	DIMENSIONS	OE PART NUMBER
7701466606	G11161	P	B	8 x 13.07 x 37.7	
7701466607	G11161	P	B	8 x 13.07 x 37.7	
7701468960	G11161	P	B	8 x 13.07 x 37.7	
7701468961	G11161	P	B	8 x 13.07 x 37.7	
7701468861	G3590	F	B	7.01 x 12.06 x 39.2	7700743529
7701468961	G3590	F	B	7.01 x 12.06 x 39.2	7700743529
7438610007	01-S2737	F	S03	7 x 12.15 x 45	
7438610008	01-S2737	F	S03	7 x 12.15 x 45	
7701471279	G11238	A	B	5.5 x 11.07 x 40.5	7700109151
7701473101 77014712	G11238	A	B	5.5 x 11.07 x 40.5	7700109151
7701471780	G11344	A	B	5.5 x 11.06 x 45	7700114862
7701471781	G11344	A	B	5.5 x 11.06 x 45	7700114862
13201-EN20A					
13202-EN200					
7701465495	G3005	F	G	8 x 13.05 x 51	7701459378
7701465496	G3005	F	G	8 x 13.05 x 51	7701459378
7701465497	G3005	F	G	8 x 13.05 x 51	7701459378
7701464556	G11029	P	B	8.01 x 13.07 x 48.4	
7701464557	G3241	F	B	8.01 x 13.07 x 45	
7701474099					
7701474100					

MODEL	YEAR	CC	No. Cyls	IN/ EX	VALVE PART NUMBER	DIMENSIONS	MAT.	SA CG
RENAULT DIESEL								
Clio DCi Eng. K9K-700/704	2001	1461	4	In Ex	RNVI760000 RNVX760000	33.4 x 6 x 101 28.9 x 6 x 100.8	P P	45-3 45-3
R5/9/11 R19/21 Clio RI/RN Express	1985 1989 1990 1985	1595 1870	4 4	In In Ex	RNVI800000 RNVI800001 RNVX800000	35 x 8 x 111.6 36.1 x 8 x 111.7 31.6 x 8 x 111.3	P P P	45-1 30-1 45-1
Espace Kangoo Megane TDi Megane Espace F9Q DCi/DTi 730/734/782/790/ 732/733/950	2001 1996 2001	1870	4	In Ex	RNVI800002 RNVX800002	35.3 x 7 x 110.9 32.6 x 7 x 110.7	P P	45-1 45-1
Clio Scenic Trafic Eng. F8Q-600/ 606/630/ 632/ 788/790	1997	1870	4	In Ex	RNVI800004 RNVX800003	35 x 8 x 110 31.5 x 8 x 110.5	P P	45-1 45-1
Clio Megane Scenic Engs. F8Q-786	1997	1870	4	In Ex	RNVI800004 RNVX800004	35 x 8 x 110 31.3 x 8 x 109.8	P P	45-1 45-1
Scenic 2.0DCi Megane 2.0DCi Laguna 2.0DCi Vel Satis 2.0DCi Koleos 2.0DCi Eng. M9R 16v	2003 2003 2002 2002 2008	1995	4	In Ex	RNVI840000 RNVX840000	27.7 x 6 x 103.9 26 x 6 x 103.8		45-3 45-3
R18/20/21/25/30-D/TD Espace D/TD Master Safrane Trafic Engs. J8S/J8S-T	1980 1984 1992	2068	4	In Ex	RNVI860000 RNVX860000	40.3 x 8 x 111.6 33.3 x 8 x 111.6	P P	45-1 45-1
Espace TD Grand Espace TD Laguna Safrane Eng. G8T-706/708 12v	1999 1993	2188	4	In Ex	RNVI870000 RNVX870000	32.2 x 7 x 117.6 31.1 x 7 x 117.6	P P	45-3 45-3

OE PART NUMBER	VALVE GUIDE PART NUMBER	GUIDE TYPE	MAT.	DIMENSIONS	OE PART NUMBER
7701473184	G11308	F	B	6 x 11.07 x 40.5	
7701473183	G11308	F	B	6 x 11.07 x 40.5	
7701468035	G3244	F	B	8 x 13.07 x 39	
7700-702871/738494	G3244	F	B	8 x 13.07 x 39	
7701-462813/465107/466716					
7700-696117 7701-462814/466717	G3244	F	B	8 x 13.07 x 39	
7700110387 7701471702 7701476024	G13600	F-1	B	7 x 12.06 x 38.3	7700859086
7700110389 7701471703 7701476025	G13600	F-1	B	7 x 12.06 x 38.3	7700859086
7701471704 7701468190	G3244	F	B	8 x 13.07 x 39	
7701468623 7701468193 7701469371	G3244	F	B	8 x 13.07 x 39	
7701469369 7701471704	G3244	F	B	8 x 13.07 x 39	
7701469373 7701471705	G3244	F	B	8 x 13.07 x 39	
	G11523	F	B	6 x 11.06 x 42.4	
	G11523	F	B	6 x 11.06 x 42.4	
7700-63545/692312 7701-461338/462232	G3251	F	B	8 x 13.07 x 49	
7700663546 7701461339	G3251	F	B	8 x 13.07 x 49	
7701469684 7701468169	G11354	F	B	7 x 12.04 x 42	
7701468170 7700859517	G11355	F	B	7 x 12.04 x 49	

MODEL	YEAR	CC	No. Cyls	IN/ EX	VALVE PART NUMBER	DIMENSIONS	MAT.	SA CG
Espace Grand Espace Laguna Trafic Vel-Satis Eng. G9T, G9U, P9X.A7	2002	2188 2463 2958	4 4 V6	In Ex	RNVI870001 RNVX870001	30.6 x 6 x 123.2 29.5 x 6 x 123	P C	45-3 45-3
Safrane Eng. 8144.97	1992	2499	4	In Ex	FTVI930000 FTVX930000	41 x 8 x 120.7 34.5 x 8 x 122	P P	30-1 45-1
Master 2.8TD S9W-700/702	1998	2799	4	In Ex	FTVI930000 FTVX930004	41 x 8 x 120.7 36.5 x 8 x 121.9	P P	30-1 45-1
Mascott Master 3.0l DCi 16v Eng.ZD3.A600/ A604	2004 2003	2953	4	In Ex	NSVI960001 NSVA960001	32 x 7 x 113.4 30 x 7 x 113.4	C C	45-1 45-1

OE PART NUMBER	VALVE GUIDE PART NUMBER	GUIDE TYPE	MAT.	DIMENSIONS	OE PART NUMBER
7701472669 7701472670	G11356 01-2705 (3.0 V6) G11356 01-2705 (3.0V6)	F P F P	B G B G	6.01 x 11.05 x 50 6.01 x 11.04 x 42 6.01 x 11.05 x 50 6.01 x 11.04 x 42	 7701052725 7701052725
7701463603 7701467250 7701203675	G2269 G2269	A A	G-1 G-1	8.02 x 13.03 x 60 8.02 x 13.03 x 60	
7701463603 7701467250 7701467249	G2269 G2269	A A	G-1 G-1	8.02 x 13.03 x 60 8.02 x 13.03 x 60	
7701475382 7701475381	G11346 G11346	F-6 F-6	G G	7 x 11.04 x 45 7 x 11.04 x 45	

MODEL	YEAR	CC	No. Cyls	IN/ EX	VALVE PART NUMBER	DIMENSIONS	MAT.	SA CG
ROVER including & Triumph A35, A40 Midget Mini Minor Sprite	**BLMC** 1958/74	 848 948	 4 4	 In Ex				
Allegro A35, A40 1100 Midget Mini, Minor Sprite	1962	1098	4	In Ex				
1300 Allegro, Ital Marina, Metro Midget, Mini inc. Cooper S Minor, Sprite	1963/90	998 1275	4 4	In Ex	RVVI706100A RVV706101A RVVI706102A RVVI706103A RVVX706100A RVVX706101A Valves for 1275 only	35.6 x 7.1 x 90.8 35.7 x 7.1 x 90.7 33.2 x 7.1 x 90.7 33.3 x 7.1 x 90.5 29.3 x 7.1 x 90.5 29.3 x 7.1 x 90.7 Check dimensions & OE references		45-1 45-3 45-3 45-1 45-1 45-3
Metro Turbo	1982	1275	4	In Ex				
Triumph Herald 1200, 12/50	1963/67	1147 1249	4 4	In Ex				
MG Midget 1500 Triumph 1300/1500 Dolomite Herald 13/60 Spitfire, Toledo	1974/79 1966/73 1976/80 1968/71 1973/79	1296 1493	4 4	In Ex				
2000 MK2 2500 TC GT6 MK2/3 TR5, TR6 Vitesse 2	1969/77 1974/77 1968/73 1967/75 1969/71	1998 2498	6 6	In Ex				
2000 GT6 Vitesse 1.6 Vitesse 2.0	1963/69 1966/68 1962/66 1967/69	1596 1998	6 6	In Ex				
216 Eng. D16A	1989	1590	4	In Ex	HDVI750001 HDVX750001	29 x 5.5 x 115 25 x 5.5 x 118.7	C C	45-1 45-1

OE PART NUMBER	VALVE GUIDE PART NUMBER	GUIDE TYPE	MAT.	DIMENSIONS	OE PART NUMBER
	01-0028 G2772 01-0028 G2772	A A-1 A A-1	G G G G	7.14 x 11.94 x 43 7.14 x 11.94 x 43 7.14 x 11.94 x 43 7.14 x 11.94 x 43	2A608 12G1111 2A608 12G1111
	01-1274 01-1274	A A	G G	7.14 x 11.91 x 39 7.14 x 11.91 x 39	12A186 12A186
AEG544 TAM1059 TAM1058 12G941 AHU1049 TAM1061	G2772 G2772	A-1 A-1	G G	7.14 x 11.94 x 43 7.14 x 11.94 x 43	12G1111 12G1111
	G2772 01-2122	A-1 A-1	G G	7.14 x 11.94 x 43 8.04 x 11.96 x 43	12G1111 CAM6980
	01-0426 01-0426	A A	G G	7.94 x 12.74 x 57 7.94 x 12.74 x 57	111869 111869
	G2161 G2161	A A	G G	7.94 x 12.74 x 52.4 7.94 x 12.74 x 52.4	58923 58923
	G2161 01-0426	A A	G G	7.94 x 12.74 x 52.4 7.94 x 12.74 x 57	58923 111869
	01-1300 01-1300	A A	G G	7.95 x 12.70 x 69 7.95 x 12.70 x 69	119622 119622
FDU1485 LGH101100 FDU1487 LGH101110	G3571 G3572	F F	G-1 G-1	5.53 x 11.06 x 47.5 5.53 x 11.06 x 54	FDU1256 FDU1260

MODEL	YEAR	CC	No. Cyls	IN/ EX	VALVE PART NUMBER	DIMENSIONS	MAT.	SA CG
111/214/414 25 Metro Eng. K8/11K/ 14K2	1990 2000 1990	1113 1396	4 4	In Ex	RVVI750001 RVVX750001	33.5 x 7 x 90.5 31.2 x 7 x 91	P P	45-1 45-1
111/214 414/416 100/200/400 25/45/75 Metro MGF Engs. 14K4/ 16K4/ 18K4 Non-VVC	1989 1991 1996 1999	1396 1588 1796	4 4 4	In Ex	RVVI750000 RVVX750000	27.7 x 6 x 89.6 24.2 x 6 x 90	P P	45-1 45-1
25/45/75 Freelander MGF-VVC Eng 18K16/20K4/ 25K4	1999 2001 1999	1796 1985 2497	4 V6 V6	In Ex	RVVI800000 RVVX800000	31.5 x 6 x 89.6 27.5 x 6 x 90	C C	45-1 45-1
Austin Cambridge A50, 55, 60 Princess 1800 MG Magnette MGA 1600 MGB 1800 Morris Cowley Marina Oxford Riley 4/68 Wolseley 15/60, 16/60	1954 1964 1954 1958/61 1962/78 1959/61 1971 1956	1498 1622 1798	4 4 4	In Ex				
220/420 620/820 Eng. 20T4	1991	1996	4	In Ex	RVVI844500 RVVX844500	31.9 x 7.1 x 110.8 29.4 x 7.1 x 110.8	P P	45-1 45-1
820E/SE 820I/SI Vitesse Turbo Eng. M16E/I	1986-1991	1996	4	In Ex	RVVI844501 RVVX844501	31.8 x 7.1 x 111.7 29.2 x 7.1 x 111.7	P P	45-1 45-1
Ambassador Ital Maestro Montego Princess Sherpa Eng. “O” series	1982 1978 1984 1978/82 1984	1695 1994	4 4	In Ex Ex				
Austin Healey 100/6 3000	1959 1959/68	2639 2912	6 6	In Ex				

OE PART NUMBER	VALVE GUIDE PART NUMBER	GUIDE TYPE	MAT.	DIMENSIONS	OE PART NUMBER
WAM4002 WAM4003 LGH101180	G11170 G11170	A A	G-1 G-1	7.01 x 12.03 x 32 7.01 x 12.03 x 32	WAM4227 WAM4227
LGH10029 LGH10029L LGH10028 LGH100820 LGH101190	G3483 G11166 G3483 G11186	A A-1 A A-1	G-1 G-1	6.01 x 9.84 x 30 6.01 x 9.88 x 30 6.01 x 9.84 x 30 6.01 x 9.88 x 30	WAM1452 LGH10034 WAM1452 LGH10034
LGH10064 LGH10065 LGH101360	G11166 G11166	A-1 A-1	G-1 G-1	6.01 x 9.88 x 30 6.01 x 9.88 x 30	LGH10034 LGH10034
	G3321 G2060	A-11 A-11	G G	8.74 x 14.34 x 47.8 8.74 x 14.34 x 56.3	12H2222 12B1339
LGH10020 LGH101060 LGH10049 LGH1010000	G11172 G11173	A A	G-1 G-1	7.14 x 12.04 x 46.8 7.14 x 12.04 x 51.3	LGJ100540 LGJ100550
UAM1755 LGH10004 LGH101140 UAM1756 LGH10005 LGH10061	G3479 G3480	A-1-3 A-1-3	G G	7.14 x 12.04 x 48.5 7.14 x 12.04 x 53	UAM2514 UAM2515
	G3138 G3138 01-2553 (turbo only)	A-1 A-1 A-1	G G G	7.46 x 12.06 x 39 7.46 x 12.06 x 39 8.03 x 12.05 x 38.8	CAM5821 CAM5821 UAM1955
	01-0026 01-0027	A A	G G	8.73 x 14.33 x 57.5 8.73 x 14.33 x 65.5	AEC135 AEC914

MODEL	YEAR	CC	No. Cyls	IN/ EX	VALVE PART NUMBER	DIMENSIONS	MAT.	SA CG
Dolomite Sprint Stag TR7	1972/80 1970/77 1975/82	1998 2997 1998	4 V8 4	In Ex				
623 Eng. H23A1/2/3	1993- 1997	2259	4	In Ex	HDVI870001 HDVX870001	34 x 6.6 x 103.7 29 x 6.6 x 102.7	C C	45-1 45-1
3500/3500S Discovery Land Rover 90- 110 Range Rover SD1 Engs. 21D/22D/ 23D/24D/25D/ 35D/36D/37D/ 38D/40D/42D/ 46D	1975 1989 1975 1989 1977	3528 3947 4273 4554	V8 V8 V8 V8	In Ex	RVVI888000 RVVX888000	39.9 x 8.7 x 117 34.3 x 8.7 x 117	C P	45-12 45-12
Rover 2.0SC/TC 2.2SC/TC	1963/73 1973/77	1980 2205	4 4	In Ex				
Land Rover 88 90 109 110 Engs. 10H, 11H	 1959 1983 1959 1983	 2286	 4	In Ex	LRVI904700 LRVI904704 LRVX904700 LRVX904704	44.5 x 7.9 x 111.4 44.5 x 7.9 x 111.4 35 x 8.7 x 111.4 34.3 x 8.7 x 111.4	P P P P	30-3 30-1 45-3 45-1
Land Rover 100 109 110	1960	2625 3000	6 6	In Ex				
Range Rover 4.4l 32v Eng. 448S2	2002	4398	V8	In Ex	BMVI920000 BMVX920000	35 x 6 x 104.1 30.4 x 6 x 103.6	P P	45-3 45-3
Discovery Range Rover 4.4l 32v	2002?	4400	V8	In Ex	RVVI920000 RVVX920000 **UNDER DEVELOPMENT**	34.8 x 5 x 105.3 30.9 x 5 x 105.1	C P	45-1 45-1

OE PART NUMBER	VALVE GUIDE PART NUMBER	GUIDE TYPE	MAT.	DIMENSIONS	OE PART NUMBER
	01-1299 01-1299	B B	G G	7.93 x 12.72 x 49.2 7.93 c 12.72 x 49.2	142476 142476
	01-2591 01-2592	F F	S03 S03	6.60 x 12.10 x 39 6.60 x 12.10 x 43	LGJ100460 LGJ100470
614088 ERR1780 ERC9088 614089 ERR7027 ETC8684	G3029 G3029	A A	G G	8.71 x 15.12 x 65.9 8.71 x 15.12 x 65.9	603554 603554
	G2739 G2740	C C	G G	7.95 x 14.30 x 64.3 8.74 x 14.30 x 64.3	541458 541457
ETC4067 ERC7150/277593 ETC5866 ERC7151/277594	G2579 G2583 G2580 G2584	C-4 G-2 C-4 G-2	G G G G	7.93 x 13.54 x 55.5 7.93 x 13.53 x 51 8.70 x 14.34 x 52.5 8.74 x 14.34 x 50	500144 568686 500145 568687
	01-1290 01-0348	C-4 C	G G	8.74 x 14.33 x 38.1 8.72 x 14.34 x 57	504169 511833
	G3544 G3544	F F	B B	43.5 x 6 x 12.56 43.5 x 6 x 12.56	11121735534 11121735534
4646005 LR002447 4646004					

MODEL	YEAR	CC	No. Cyls	IN/ EX	VALVE PART NUMBER	DIMENSIONS	MAT.	SA CG
ROVER DIESEL								
Range Rover Eng. M51	1994	2497	6	In Ex	BMVI800002 BMVX800002	35.9 x 6 x 103.7 30.9 x 6 x 103.6	P P	45-3 45-3
Discovery Range Rover TDV6/TDV8 Eng. 276DT/368DT	2006	2720 3600	V6 V8	In Ex	PGVI810000 PGVX810000	27.7 x 6 x 97.1 25.2 x 6 x 96.4	P P	45-3 45-3
218/418 TD 218/418 D Engs. XUD7TE/ XUD9A	1991	1769 1905	4 4	In Ex	PGVI830001 PGVX830001	38.5 x 8 x 121 33 x 8 x 112	P P	45-1 45-1
75 Freelander Eng. 204D2 (M47) Range Rover 3.0 TD6 Eng.306D1	1999 2000 2002	1950 2926	4 6	In Ex	BMVIX840005 BMVIX840005	25.9 x 6 x 99.9 25.9 x 6 x 99.9	P P	45-3 45-3
220/420/620 200/400 25/45 MGZR/ZS Eng. 20T2N/2R	1995 1999 2001	1994	4	In Ex	RVVI844502 RVVX844502	37.2 x 6.9 x 86.7 32.5 x 6.9 x 86.7	P P	45-1 45-1
Discovery Eng. TD5	1997	2496	5	In Ex	LRVI844500 LRVX844500	34.7 x 7 x 105.3 31.7 x 7 x 105.3	P P	30-3 45-3
Freelander TD4 2.2 16v Eng. 4HT	2006	2179	4	In Ex	PGVI850004 PGVX850004	27.2 x 6 x 95.8 25 x 6 x 95		45-3 45-3
Land Rover Sherpa Engs. 12J/19J N/A & Turbo	1958 1983	2495	4	In Ex	LRVI904701 LRVX904701	39.2 x 7.9 x 116.5 33.4 x 8.7 x 117	P P	45-3 45-3
Defender Discovery Engs. 200/300 TDi	1989	2495	4	In In EX	LRVI904702 LRVI904705 LRVX904702	39.5 x 8 x 116.5 38.9 x 8 x 116.3 36.5 x 8 x 116.5	P P P	45-3 45-3 45-3
Land Rover 88 109 Eng. 10J	1958 1959	2051 2286	4	In Ex	LRVI904703 LRVX904703	39.2 x 7.9 x 116.5 33.4 x 8.7 x 117	P P	45-1 45-1
825 Land Rover Range Rover Engs. VM81A/ VM84A	1990 1986	2393 2498	4 4	In Ex	VMVI920000 VMVX920000	40.1 x 8 x 121 33.9 x 8 x 121	P P	35-1 45-1

OE PART NUMBER	VALVE GUIDE PART NUMBER	GUIDE TYPE	MAT.	DIMENSIONS	OE PART NUMBER
STC2156 STC2149	G13599 G13599	F F	B B	6 x 12.55 x 39.5 6 x 12.55 x 39.5	
12311281 1316137 1520918					
LGH10051 LGH10053 LGH10052 LGH10054 LGH10075	G3528(XUD7TE) G3163(XUD9A) G3528(XUD7TE) G3163(XUD9A)	F A F A	B B B B	8.01 x 14.06 x 48 8.01 x 14.06 x 52 8.01 x 14.06 x 48 8.01 x 14.06 x 52	 022065 022065
LGH101450 LGH101450	G11313 G11313	A A	B B	6 x 11.54 x 39 6 x 11.54 x 39	
LGH100990 LGH100980	G11323 G11323	A A	G-1 G-1	6.95 x 12.04 x 28 6.95 x 12.04 x 28	LGJ100510 LGJ100510
ERR6611 ERR6612	G11428 G11428	A A	G G	6.93 x 12.05 x 39 6.93 x 12.05 x 39	
	GS11319 GS11319	A-1 A-1	S06 S06	41.5 x 6 x 10.06 41.5 x 6 x 10.06	
ERC9739A ETC5739 ERC9738A ETC5740	G2585 G2586	G-2 G-2	G G	7.94 x 13.54 x 46.5 8.74 x 14.34 x 57	605482 605483
ERR1157(200TDi) ERR3777(300TDi) ERR1156	G11175 G11175 G11175	F F F	G G G	8 x 14.06 x 49 8 x 14.06 x 49 8 x 14.06 x 49	ETC8003 ETC8003 ETC8003
	G2581 G2585(1971 on) G2582 G2586(1971 on)	C-4 G-2 C-4 G-2	G G G G	7.93 x 13.54 x 51 7.94 x 13.54 x 46.5 8.72 x 14.34 x 59.8 8.74 x 14.34 x 57	272206 605482 275552 605483
AEU2296L LGH10041 RTC4116	G3126 G3126	A A	G G	8.01 x 14.05 x 55 8.01 x 14.05 x 55	60507152 60507152

MODEL	YEAR	CC	No. Cyls	IN/ EX	VALVE PART NUMBER	DIMENSIONS	MAT.	SA CG
SAAB								
9.3 1.8 16v Eng. Z18XE	2004	1796	4	In Ex	OPVI805000 OPVX805000	31.2 x 5 x 101.3 27.5 x 5 x 100.7	C C	45-3 45.3
900SE 9000CSE/CDE Engs. B258i/ B308I 24v	1993 1994	2498 2962	V6 V6	In Ex	OPVI860000 OPVX860000	32 x 6 x 102.1 29 x 6 x 102.1	P P	45-3 45-3
9.3 Sport Sedan 2.0T Eng. B207R	09/2002	1998	4	In Ex	OPVI860002 OPVX860002	35 x 6 x 102.2 30.1 x 6 x 101	C C	45-3 45-3
99 EMS/GL/GLE 900 EMS/GL/GLE Engs, B20, B20E Inc. turbo	1972/76 1976	1985	4	In Ex				
900 9000 Engs. B202/ B234E 16v & Turbo	1984-93 1986-91	1985 2290	4 4	In Ex	SAVI900000 SAVX900000	32 x 7 x 108.3 29 x 7 x 108.3	P P	45-3 45-3
900 9000 Engs. B204/ B234i 16v & Turbo	1993 1992	1985 2290	4 4	In Ex	SAVI900001 SAVX900000	33 x 7 x 107.8 29 x 7 x 108.3	P P	45-3 45-3
9-3 9-5 B205E/L/R B234L B235E B235L	1997	1985 2290	4 4	In Ex	SAVI900002A SAVX900002A	33 x 5 x 107.5 29 x 5 x 108	P p	45-3 45-3

OE PART NUMBER	VALVE GUIDE PART NUMBER	GUIDE TYPE	MAT.	DIMENSIONS	OE PART NUMBER
	G13598 G13598	F F	G G	5 x 10.05 x 39 5 x 10.05 x 39	
4500849 4500864 90410816	G3511 G3511	F F	G-1 G-1	6 x 10.03 x 45 6 x 10.03 x 45	
12786696 12791961	G11379 G11379	F-1 F-1	G G	6 x 10.04 x 6 6 x 10.04 x 6	
	01-1970 01-1367 01-1970 01-1367	B B B B	G-1 G-1 G-1 G-1	8.01 x 13.04 x 46.5 8.01 x 13.04 x 49 8.01 x 13.04 x 46.5 8.01 x 13.04 x 49	 8350944 8350944
7484801 7562002 9165598	G3486 G3486	F F	G-1 G-1	7 x 12.04 x 49.2 7 x 12.04 x 49.2	7560154 7560154
9165580 9165598 7500085	G11274 01-S2643 (special alloy) G11274 01-S2643 (special alloy)	F F F F	G-1 S06 G-1 S06	7 x 12.03 x 43 7 x 12.03 x 42.7 7 x 12.03 x 43 7 x 12.03 x 42.7	 9185612 9185612
9185851 9399965	G11209 G11209	F F	G G	5 x 12.04 x 42.8 5 x 12.04 x 42.8	9399957 9399957

MODEL	YEAR	CC	No. Cyls	IN/ EX	VALVE PART NUMBER	DIMENSIONS	MAT.	SA CG
SAAB DIESEL								
9.3 1.9TiD 16v 9.5 1.9 TiD 16v Engs. Z19DT, Z19DTH	2004 2006	1910	4	In Ex	ARVI820000 ARVX820000	28 x 6 x 114.4 26 x 6 x 114.4	P P	45-3 45-3
9.3 1.9TiD 8v Eng. Z19DT	2003	1910	4	In Ex	FTVI820004 FTVX820004	35.5 x 8 x 115.2 34.47 x 8 x 115.1	P P	45-3 45-3
9-3 9-5 Eng. D223L (X22DTH)	1998 2002	2172	4	In Ex	OPVI840000 OPVX840000	29 x 6 x 97.1 25.8 x 6 x 97.1	P P	45-3 45-3
9.5 3.0TiD 24v Eng. Y30DT	2001	2958	V6	In Ex	OPVI875000 OPVX875000	27.5 x 6 x 98.5 26.5 x 6 x 98.10	P P	45-1 45-1

OE PART NUMBER	VALVE GUIDE PART NUMBER	GUIDE TYPE	MAT.	DIMENSIONS	OE PART NUMBER
	G11302 G11302	F F	G G	6.02 x 11.03 x 47 6.02 x 11.03 x 47	55186786 55186788
641083 641089	G11000 G11000	F F	G-1 G-1	8.02 x 14.03 x 43 8.02 x 14.03 x 43	7565472 7565472
4772380 4772414	GS3511 GS3511	F F	S06 S06	6 x 10.05 x 45 6 x 10.05 x 45	
	G11503 G11503	P-1 P-1	G G	6 x 11.05 x 42 6 x 11.05 x 42	642060 642060

MODEL	YEAR	CC	No. Cyls	IN/ EX	VALVE PART NUMBER	DIMENSIONS	MAT.	SA CG
SCANIA								
D420-440	1950/73	5650	4	In				
D610-640	1950/61	6235	6					
D810-830	1950/60	7790	6					
D8, D8L	1975	8470	6	Ex				
DN8		9350	6					
DS8		11300	V8					
D10/DS10	1958/68	10260	6	In				
DN11/DS11	1968/81	11015	6					
DN14/DS14	1969/81	14181	V8	Ex				
				Ex				
DN9, DS9, DSC9	1985	8471	6	In				
D11	1962/73	11015	6					
DN11, DS11	1981	14181	V8					
DSC11				Ex				
DS14, DSC14	1977							
DC11.01/02	1996	11015	6	In				
DSC11.79		11700	6					
DSC12.02								
				EX				
DSC11.06/08	1988/91	11015	6	In				
DSC11.13/7/8	1990/96	14181	V8					
DSC11.16/7/8	1988/96							
DSC11.21/3	1990/96			Ex				
DSC11.22/30/70	1991/96							
DSC14.13	1995							
DSC14.15	1995							

OE PART NUMBER	VALVE GUIDE PART NUMBER	GUIDE TYPE	MAT.	DIMENSIONS	OE PART NUMBER
	01-0969	A	G	11 x 18.01 x 86.2	277409
	01-0970	A-6	G	11 x 18.01 x 85.9	17543
	01-0971	A	G	11 x 18.01 x 80.2	269715
	01-0278	A-8	G	11 x 18.01 x 73	300958/269716
	01-0972	A-6	G	11 x 18.01 x 80.2	131086
	01-2077	A-8	G	11 x 18.01 x 80	300957
	01-2078	A-8	G	11 x 18.01 x 73	300958
	01-2634	F-8	G	10 x 16.01 x 73	1403823
	01-2634	F-8	G	10 x 16.01 x 73	1403823
	01-2658	F-8	G	11 x 18.01 x 75	393263
	01-2653	F-8	G1	11 x 18.01 x 68.2	1398624

MODEL	YEAR	CC	No. Cyls	IN/ EX	VALVE PART NUMBER	DIMENSIONS	MAT.	SA CG
SEAT								
Arosa Ibiza Engs. AER, ALL	1999	999	4	In Ex	ADVI671000 ADVX671000	31 x 7 x 94.7 26 x 7 x 94.4	P P	45-3 45-3
Arosa Eng. AHT	1998	999	4	In Ex	ADVI671001 ADVX671001	31 x 6 x 99 26 x 6 x 99	P P	45-3 45-3
Altea 1.2TSi Ibiza 1.2 TSi Leon 1.2 TSi Engs. CBZA/ZB	2011	1197	4	In Ex	ADVI710000 ADVX710000	35.5 x 6 x 98.7 30 x 6 x 98.3	C P	45-.3 45-3
Arosa Eng. AHT	1998	999	4	In Ex	ADVI755000 ADVX755000	34 x 7 x 101.4 30 x 7 x 101.4		45.3 45.3
Ibiza Engs. AAU, AAV ABD, 2G	>1996	1043 1272 1390	4 4 4	In In Ex	ADVI750000 ADVI750001 ADVX750000	32 x 8 x 99.3 36 x 7.97 x 98.8 28.8 x 7.97 x 99	P P P	45-3 45-3 45-3
Ibiza Cordoba Engs. AAU,AAV,ABD. 2G	05/1993	1043 1391	4 4	In In Ex	ADVI750002 ADVI750004 ADVX750002	34 x 7 x 99 35.9 x 7 x 99.2 28.8 x 7 x 99	P P P	45-3 45-3 45-3
Arosa 16v Cordoba 16v Ibiza 16v Leon 16v Engs. AFK,AQQ, AUA,AUS,AZD, BBY,BBZ,BKY	2001 2000 1998 1999	1198 1390 1597	3 4 4	In Ex	ADVI765000 ADVX765000	29.5 x 6 x 100.9 26 x 6 x 100.6	C P	45-3 45-3
Arosa Cordoba Ibiza Inca Engs. AEX,AEE,AKV	1997 1994 1993 1995	1390 1598	4 4	In Ex	ADVI765001 ADVX765001	35.5 x 7 x 94.7 29 x 7 x 95	P P	45-3 45-3
Ibiza 16v Cordoba 16v Eng. AFH	1996	1390	4	In Ex	ADVI765004 ADVX765004	29.5 x 6 x 97.9 26.1 x 6 x 97.2	C P	45-3 45-3
Ibiza Cordoba Inca Eng. ABU, AEE	1993	1598	4	In Ex	ADVI765003 ADVX765001	34.6 x 7 x 94.8 29 x 7 x 95	P P	45-3 45-3
Arosa Cordoba Ibiza Inca Engs. AKK,ANW, AUD	1997 1999 1999 1995	1390	4	In EX	ADVI765006 ADVX765006	33.5 x 6 x 99.2 28 x 6 x 99.1	P P	45-3 45-3

OE PART NUMBER	VALVE GUIDE PART NUMBER	GUIDE TYPE	MAT.	DIMENSIONS	OE PART NUMBER
030109601AG	G11181	G	B	7 x 11.07 x 33	032103419A
030109611N	G11181	G	B	7 x 11.07 x 33	032103419A
030109601AK	G3552	F	B	6 x 11.06 x 35.9	
030109611S	G3552	F	B	6 x 11.06 x 35.9	
03F109601A					
03F109611B 03F109611C					
047106601D	G11181	G	B	7 x 11.07 x 33	032103419A
047109611D	G11181	G	B	7 x 11.07 x 33	032103419A
030109601E 030109601B-D	G2664	G	B	7.98 x 12.06 x 36.5	056103419A
030109611A-B	G2664	G	B	7.98 x 12.06 x 36.5	056103419A
030109601G	G11194	G	B	7 x 11.07 x 36.5	030103419A
030109611D	G11194	G	B	7 x 11.07 x 36.5	030103419A
036109601S	G3552	F	B	6 x 11.06 x 35.9	
036109611K	G3552	F	B	6 x 11.06 x 35.9	
030109601AH	G11181	G	B	7 x 11.07 x 33	032103419A
030109611G	G11181	G	B	7 x 11.07 x 33	032103419A
036109601P	G3552	F	B	6 x 11.06 x 35.9	
036109611L	G3552	F	B	6 x 11.06 x 35.9	
032109601G	G11181	G	B	7 x 11.07 x 33	032103419A
032109611G	G11181	G	B	7 x 11.07 x 33	032103419A
030109601AL	G3552	F	B	6 x 11.06 x 35.9	
030109611T	G3552	F	B	6 x 11.06 x 35.9	

MODEL	YEAR	CC	No. Cyls	IN/ EX	VALVE PART NUMBER	DIMENSIONS	MAT.	SA CG
Alhambra Cordoba Ibiza Leon Toledo Engs. AJH,AQX, APP,ARY,AUQ, BAM 20v Turbo	1998 2000 2000 2000 1999	1781	4	In Ex	ADVI810000 ADVX810001	27 x 6 x 105.1 29.9 x 6 x 103.9	C P	45-3 45-3
Leon Toledo Engs. AGN/AGP 20v	1999 1998	1781	4	In Ex	ADVI810000 ADVX810000	27 x 6 x 105.1 29.9 x 6 x 103.8	C P	45-3 45-3
Cordoba Ibiza Toledo GT Eng. ABF 16v	1993 1991	1781	4	In Ex	ADVI810002 ADVX810002	32 x 7 x 95.5 28 x 7 x 98.2	P P	45-1 45-1
Cordoba Toledo Engs, AFT,ABS, AAM	1991	1598 1781 1984	4 4 4	In In Ex	ADVI810005 (AFT/ABS) ADVI810004 (AAM) ADVX810004	38 x 7.97 x 91.9 40 x 7.97 x 91 33.2 x 7.97 x 91.2	P P P	45-3 45-3 45-3
Altea Ibiza Toledo Eng. BGU Ibiza Bi Fuel Altea Bi Fuel Eng. CHGA	2004 2011	1595	4	In Ex	ADVI810011 ADVX810011	33.8 x 6 x 104 28 x 6 x 101.9	C P	45-3 45-3
Alhambra Ibiza Cordoba Toledo Eng. ABF, ADL 16v	1996 1996 1996 1993	1780 1984	4 4	In Ex	ADVI825000 ADVX825000	32 x 7 x 95.5 27 x 7 x 98	P P	45-3 45-3
Alhambra Cordoba Ibiza Toledo Engs. ADY,AGG,AEH, AFT,APF,AUR	1999 1993	1598 1780 1984	4 4 4	In Ex	ADVI825001 ADVX825001	39.5 x 7 x 91.9 32.9 x 7 x 91.2	C P	45-3 45-3
Altea 2.0 FSI 16v Leon 2.0FSI 16v Engs. BLR, BLX	2004	1984	4	In Ex	ADVI825002 ADVX825002	33.8 x 6 x 104 28 x 6 x 101.9	C P	45-3 45-3

OE PART NUMBER	VALVE GUIDE PART NUMBER	GUIDE TYPE	MAT.	DIMENSIONS	OE PART NUMBER
058109601C	G3552	F	B	6 x 11.06 x 35.9	
058109611E	G3552	F	B	6 x 11.06 x 35.9	
058109601C	G3552	F	B	6 x 11.06 x 35.9	
058109611M	G3552	F	B	6 x 11.06 x 35.9	
027109601C	G3504 (>96) G3561 (96>)	G G	B B	7 x 12.06 x 38 7 x 12.06 x 35	027103419 051103419
027109611D	G3504 (>96) G3561 (96>)	G G	B B	7 x 12.06 x 38 7 x 12.06 x 35	027103419 051103419
035109601K	G2664	G	B	7.98 x 12.06 x 36.5	056103419A
026109601A-C 053109611	G2664	G	B	7.98 x 12.06 x 36.5	056103419A
06B109601D 06B109601H	G11384	F	B	5.98 x 12.06 x 36.5	
06B109611C	G11384	F	B	5.98 x 12.06 x 36.5	
051109601B	G3561	G	B	7 x 12.06 x 35	051103419
051109611B	G3561	G	B	7 x 12.06 x 35	051103419
037109601 078109601A-B	G3593	G	B	7 x 12.06 x 36.5	037103419B
048109611B 037109611B	G3593	G	B	7 x 12.06 x 36.5	037103419B
06D109601K	G3552	F	B	6 x 11.06 x 35.9	
06D109611L	G3552	F	B	6 x 11.06 x 35.9	

MODEL	YEAR	CC	No. Cyls	IN/ EX	VALVE PART NUMBER	DIMENSIONS	MAT.	SA CG
SEAT DIESEL								
Cordoba Ibiza Inca Toledo Engs.1Y,AAZ	1993-96 1991-99	1896	4	In Ex	ADVI795000 ADVX795000	36 x 7.97 x 95 31.2 x 7.97 x 95	P P	45-3 45-3
Alhambra Toledo Eng. 1Z	1995	1896	4	In Ex	ADVI795001 ADVX795001	36 x 7.97 x 96.9 31.5 x 7.97 x 96.9	P P	45-3 45-3
Alhambra Cordoba Ibiza Leon Toledo Engs. AHN,AHU, ALH,AGR,AFN, ASV	2001 1999	1896	4	In Ex	ADVI795002 ADVX795002	36 x 7 x 96.9 31.5 x 7 x 96.9	P P	45-3 45-3
Arosa SDi Cordoba SDi Ibiza SDi Leon SDi Toledo D/SDi Engs. AEY,AGP, AHG,AKU,AQM, ASY	1999	1716 1896	4 4	In Ex	ADVI795004 ADVX795004	36 x 7 x 96.6 31.5 x 7 x 96.4	P P	45-3 45-3
Altea 1.9TDi Arosa TDi Alhambra TDi Cordoba TDi Ibiza 1.4TDi Leon TDi Leon Cupra TDi Toledo TDi Engs. AMF,AUY, ARL, ASZ, ATD	2004 2001 2003 2001	1422 1896	3 4	In Ex	ADVI795003 ADVX795003	36 x 7 x 89.9 31.5 x 7 x 89.6	P P	45-3 45-3
Ibiza Cordoba Toledo Engs. 1Y, AAZ	06/1996	1896	4	In Ex	ADVI795005 ADVX795005	36 x 7 x 95.5 31.1 x 7 x 95.5	P P	45-3 45-3
Ibiza 1.4 TDi Eng. BHC Leon 1.9TDi Engs.AXR, BKC, BLS, BXE, BXF, BLB Leon 2.0TDi 8v Toledo 2.0TDi 8v Eng. BMM	2003 2005 2005 2006	1422 1896 1968	3 4 4	In Ex	ADVI795006 ADVX795006	35.9 x 7 x 89.4 31.5 x 7 x 89	P P	45-3 45-3

OE PART NUMBER	VALVE GUIDE PART NUMBER	GUIDE TYPE	MAT.	DIMENSIONS	OE PART NUMBER
069109601F 069109601H 074109611	G2664 G2664	G G	B B	7.98 x 12.06 x 36.5 7.98 x 12.06 x 36.5	056103419A 056103419A
028109601H 046109611F	G2664 G2664	G G	B B	7.98 x 12.06 x 36.5 7.98 x 12.06 x 36.5	056103419A 056103419A
028109601D 028109611G	G3593 G3593 G3593 G3593	G G	B B	7 x 12.06 x 36.5 7 x 12.06 x 36.5	037103419B 037103419B
028109601J 028109611K	G3593 G3593	G G	B B	7 x 12.06 x 36.5 7 x 12.06 x 36.5	037103419B 037103419B
038109601B 038109611B 038109611F	G3593 G3593	G G	B B	7 x 12.06 x 36.5 7 x 12.06 x 36.5	037103419B 037103419B
028109601C 028109611E	G3593 G3593	G G	B B	7 x 12.06 x 36.5 7 x 12.06 x 36.5	037103419B 037103419B
038109601E 038109611E	G3593 G3593	G G	B B	7 x 12.06 x 36.5 7 x 12.06 x 36.5	037103419B 037103419B

MODEL	YEAR	CC	No. Cyls	IN/ EX	VALVE PART NUMBER	DIMENSIONS	MAT.	SA CG
Altea 1.6TDi Ibiza 1.6TDi Leon 1.6TDi Eng. CAYC, CAYB	2004 2011 2004	1598	4	In Ex	ADVI795007 ADVX795007	26.5 x 6 x 99.3 24.4 x 6 x 99.1	P P	45-3 45-3
Altea TDi 16v Toledo TDi 16v Eng. AZV,BKD	2004	1968	4	In Ex	ADVI810012 ADVX810012	29.4 x 6 x 88.5 25.5 x 6 x 88.2	P P	45-3 45-3
Altea TDi-PD Leon TDi-PD Toledo TDi-PD Eng. AZV,BKD, BMN 140CV 16v	2004 2005	1968	4	In Ex	ADVI810014 ADVX810014	29.1 x 6 x 87.8 25.4 x 6 x 87.5	P P	45-3 45.3
Altea 2.0TDi-FR Leon 2.0TDi-FR Engs. CBAA, CBAB, CBBA, CBBB	2008	1968	4	In Ex	ADVI810015 ADVX810015	28.1 x 6 x 99.3 26 x 6 x 99.1		45-3 45-3

OE PART NUMBER	VALVE GUIDE PART NUMBER	GUIDE TYPE	MAT.	DIMENSIONS	OE PART NUMBER
03L109601A	G11255	F	B	5.98 x 10.06 x 42	
03L109611A	G11255 **NOT CONFIRMED CHECK SIZES BEFORE SELLING.**	F	B	5.98 x 10.06 x 42	
03G109601A	G11255	F	B	5.99 x 10.06 x 42	
03G109611B	G11255	F	B	5.99 x 10.06 x 42	
03G109601B	G11255	F	B	5.99 x 10.06 x 42	
03G109611D	G11255	F	B	5.99 x 10.06 x 42	
03L109601	G11255	F	B	5.99 x 10.06 x 42	
03L109611	G11255	F	B	5.99 x 10.06 x 42	

MODEL	YEAR	CC	No. Cyls	IN/ EX	VALVE PART NUMBER	DIMENSIONS	MAT.	SA CG
SKODA								
Fabia 1.0i Eng. AER	1999	999	4	In Ex	ADVI671000 ADVX671000	31 x 7 x 94.7 26 x 7 x 94.4	P P	45-3 45-3
Fabia 1.2TSi Octavia 1.2TSi Roomster 1.2 TSi Yeti 1.2 TSi Engs, CBZA/ZB	2011	1197	4	In Ex	ADVI710000 ADVX710000	35.5 x 6 x 98.7 30 x 6 x 98.3	C P	45-.3 45-3
Fabia Engs. ATY,ARV, AQV	2000	997	4	In Ex	ADVI720000 ADVX720000	34 x 7 x 103.8 27 x 7 x 103.7	C P	45-3 45-3
Fabia 1.4 Felicia 1.3 Engs. AZF,ATZ, 781.135/136 8v	1999 1995	1289 1397		In Ex	ADVI755000 ADVX755000	34 x 7 x 101.3 30.1 x 7 x 101.3	P P	45-3 45-3
Fabia 1.2i 6v Eng. AWY, BMD, BBM, CHFA	2001	1198	3	In Ex	ADVI765007 ADVX765006	34.5 x 6 x 99.1 28 x 6 x 99.2	P P	45-3 45-3
Fabia 1.2i 12v Engs. AZQ, BME Fabia 1.4i 16v Engs. AUA, AUB, BBY, BBZ, BKY Octavia 1.6 FSI Eng. BLF	2003 1999	1198 1390	3 4	In Ex	ADVI765000 ADVX765000	29.5 x 6 x 100.9 26 x 6 x 100.6	C P	45-3 45-3
Felicia Octavia Eng. AEE 8v	1996	1598	4	In Ex	ADVI765001 ADVX765001	35.6 x 7 x 94.8 29 x 7 x 95	P P	45-3 45-3
Octavia TRS Superb 1.8T Eng. AGU, ARX, AUM, AUQ, AWT 20v	2000 2003	1781	4	In Ex	ADVI810000 ADVX810001	27 x 6 x 105.1 29.9 x 6 x 103.9	C P	45-3 45-3
Octavia 1.8 Eng. ADR/AGN 20v Superb 2.8 Eng. AMX 30v	1998 2003	1781 2771	4 V6	In Ex	ADVI810000 ADVX810000	27 x 6 x 105.1 29.9 x 6 x 104	C P	45-3 45-3
Octavia 1.6i Engs. AVU, BFQ, BGU	2000	1595	4	In Ex	ADVI810011 ADVX810011	39.4 x 6 x 93.8 32.9 x 6 x 93.8	C P	45-3 45-3
Fabia Octavia Superb Engs. AFT, AQY, AEH, AKL, AZL, AZM	2000 1997 2003	1595 1984	4 4	In Ex	ADVI825001 ADVX825001	39.5 x 7 x 91.9 32.9 x 7 x 91.2	C P	45-3 45-3

OE PART NUMBER	VALVE GUIDE PART NUMBER	GUIDE TYPE	MAT.	DIMENSIONS	OE PART NUMBER
030109601AG 030109611N	G11181 G11181	G G	B B	7 x 11.07 x 33 7 x 11.07 x 33	032103419A 032103419A
03F109601A 03F109611B 03F109611C					
014109601F 047109611B					
047109601D 047109611D	G11181 G11181	G G	B B	7 x 11.07 x 33 7 x 11.07 x 33	032103419A 032103419A
032109601L 03D109601B 030109611T 03D109611A	G3552 G3552	F F	B B	6 x 11.06 x 35.9 6 x 11.06 x 35.9	058103415 058103415
036109601S 036109611K	G3552 G3552	F F	B B	6 x 11.06 x 35.9 6 x 11.06 x 35.9	058103415 058103415
030109601AD 030109601AH 032109611G	G11181 G11181	G G	B B	7 x 11.07 x 33 7 x 11.07 x 33	
058109601C 058109611E	G3552 G3552	F F	B B	6 x 11.06 x 35.9 6 x 11.06 x 35.9	058103415 058103415
058109601C 058109611M	G3552 G3552	F F	B B	6 x 11.06 x 35.9 6 x 11.06 x 35.9	058103415 058103415
06B109601B 06B1109601D 06B109611B 06B109611C	G3552 G3552	F F	B B	6 x 11.06 x 35.9 6 x 11.06 x 35.9	058103415 058103415
078109601B 048109611B	G3593 G3593	G G	B B	7 x 12.06 x 36.5 7 x 12.06 x 36.5	

MODEL	YEAR	CC	No. Cyls	IN/ EX	VALVE PART NUMBER	DIMENSIONS	MAT.	SA CG
Octavia 16v 2.0FSi/2.0RS Engs. BLX, BLY, BLR, BWA	2004 2006	1984	4	In Ex	ADVI825002 ADVX825002	33.8 x 6 x 104 28 x 6 x 101.9	C C	45-3 45-3

OE PART NUMBER	VALVE GUIDE PART NUMBER	GUIDE TYPE	MAT.	DIMENSIONS	OE PART NUMBER
06D109601K	G3552	A	B	6 x 11.06 x 35.9	058103415
06D109611K/L	G3552	A	B	6 x 11.06 x 35.9	058103415

MODEL	YEAR	CC	No. Cyls	IN/ EX	VALVE PART NUMBER	DIMENSIONS	MAT.	SA CG
SKODA DIESEL								
Fabia 1.9TDi Octavia TDi Engs. AGR, AHF ALF AHF, ASV	1999 1998	1896	4	In Ex	ADVI795002 ADVX795002	36 x 7 x 96.9 31.5 x 7 x 96.9	P P	45-3 45-3
Fabia TDi Superb TDi Engs. ATD, ASZ, AVB, AWX, AMF	2000 2003	1422 -2003 1896	3 4	In Ex	ADVI795003 ADVX795003	36 x 7 x 89.9 31.5 x 7 x 89.9	P P	45-3 45-3
Fabia SDi Octavia SDI Engs. AEY, AGP AQM, ASY	2000	1896	4	In Ex	ADVI795004 ADVX795004	36 x 7 x 96.6 31.5 x 7 x 96.4	P P	45-3 45-3
Felicia Eng. AEF	1995	1896	4	In Ex	ADVI795000 ADVX795000	36 x 7.97 x 95.5 31.2 x 7.97 x 95.5	P P	45-3 45-3
Felicia Eng. AEF When fitted 7mm Stems.	06/1996	1896	4	In Ex	ADVI795005 ADVX795005	36 x 7 x 95.5 31.1 x 7 x 95.5	P P	45-3 45-3
Fabia 1.4TDi Eng. AMF, BMS Roomster Superb 1.9TDi-PD Engs. BLS, BXE, BSW	2003 on 2006 2008	1422 1896	3 4	In Ex	ADVI795006 ADVX795006	35.9 x 7 x 89.4 31.5 x 7 x 89	P P	45-3 45-3
Fabia 1.6TDi Octavia 1.6TDi Roomster 1.6TDi Superb 1.6TDi Yeti 1.6TD1 Eng. CAYC	2010	1598	4	In Ex	ADVI795007 ADVX795007	26.5 x 6 x 99.3 24.4 x 6 x 99.1	P P	45-3 45-3
Superb TDi Engs. AYM, BDG 24v	2002	2496	V6	In Ex	ADVI783001 ADVX783001	27.2 x 6 x 100.6 24.1 x 6 x 100.7	P P	45-3 45-3
Octavia TDi 16v Eng. BKD	2004	1999	4	In Ex	ADVI810014 ADVX810014	29.1 x 6 x 87.8 25.4 x 6 x 87.5	P P	45-3 45-3
Octavia 2.0TDi Octavia 2.0RS 16v Engs. CBAA, CBAB, CBBA, CBBB	2008	1968	4	In Ex	ADVI810015 ADVX810015	28.1 x 6 x 99.3 26 x 6 x 99.1		45-3 45-3

OE PART NUMBER	VALVE GUIDE PART NUMBER	GUIDE TYPE	MAT.	DIMENSIONS	OE PART NUMBER
028109601D	G3593	G	B	7 x 12.06 x 36.5	037103419B
028109611G	G3593	G	B	7 x 12.06 x 36.5	037103419B
038109601B	G3593	G	B	7 x 12.06 x 36.5	037103419B
038109611B 038109611F	G3593	G	B	7 x 12.06 x 36.5	037103419B
028109601J	G3593	G	B	7 x 12.06 x 36.5	037103419B
028109611K	G3593	G	B	7 x 12.06 x 36.5	037103419B
069109601F-G-H	G2664	G	B	7.98 x 12.06 x 36.5	056103419A
069109611L-M 069109611	G2664	G	B	7.98 x 12.06 x 36.5	056103419A
028109601B 028109601C	G3593	G	B	7 x 12.06 x 36.5	037103419B
028109611E	G3593	G	B	7 x 12.06 x 36.5	037103419B
038109601E	G3593	G	B	7 x 12.06 x 36.5	037103419B
038109611E	G3593	G	B	7 x 12.06 x 36.5	037103419B
03L109601A	G11255	F	B	5.99 x 10.06 x 42	
03L109611A	G11255 **NOT CONFIRMED CHECK SIZES BEFORE SELLING.**	F	B	5.99 x 10.06 x 42	
059109601F	G11255	F	B	5.99 x 10.06 x 42	
059109611G	G11255	F	B	5.99 x 10.06 x 42	
03G109601B	G11255	F	B	5.99 x 10.06 x 42	
03G109611D	G11255	F	B	5.99 x 10.06 x 42	
03L109601	G11255	B	F	5.99 x 10.06 x 42	
03L109611	G11255	B	F	5.99 x 10.06 x 42	

MODEL	YEAR	CC	No. Cyls	IN/ EX	VALVE PART NUMBER	DIMENSIONS	MAT.	SA CG
SMART								
Car Crossblade 600 City Four-two Roadster Eng. M160	1999 2002 2003 2004 2003	599 698	3	In Ex	SMVI635000 SMVX635000	30.1 x 6 x 89.2 24.9 x 6 x 89.4	P P	45-1 45-1
Four-two 1.0Turbo Brabus Eng. 132.930	2008	999	3	In Ex	SMVI720000 SMVX720000	28 x 5 x 85.54 25 x 5 x 86.9		45-1 45-1
Forfour 1.1 12v Eng. M134E11 Forfour 1.3 16v Eng. M135E13 Forfour 1.5 16v Eng. M135E15	2004	1124 1332 1499	3 4 4	In Ex	SMVI750000 SMVX750000	30.4 x 5 x 89.6 25.4 x 5 x 90.9		45-1 45-1
SMART DIESEL								
Cabrio City Fortwo 800CDi Eng. OM660DE.8LA	2001/04 11-1999 01-2004 11/1999	799	3	In Ex	SMVI650000 SMVX650000	27.5 x 6 zx 91.3 25.4 x 6 x 91.2		45-3 45-3
Forfour 1.5 CDi Eng. OM639	2004	1493	3	In Ex	SMVI830000 SMVX830000	28.6 x 6 x 102.2 25.4 x 6 x 102.2		45-3 45-3

OE PART NUMBER	VALVE GUIDE PART NUMBER	GUIDE TYPE	MAT.	DIMENSIONS	OE PART NUMBER
1600530001	G11288	F-1	G	6 x 12.56 x 35	
1600500027	G11288	F-1	G	6 x 12.56 x 35	
1320530001	G11504	F	G	5.00 x 10.56 x 34.5	
1320530005	G11504	F	G	5.00 x 10.56 x 34.5	
1350530001	G11504	F	G	5.00 x 10.56 x 34.5	
1350530005	G11504	F	G	5.00 x 10.56 x 34.5	
	G11398	F	S06	6 x 11.56 x 34.4	
	G11398	F	S06	6 x 11.66 x 34.4	
6420530401	G11398	F	S06	6 x 11.56 x 34.4	
6420500527	G11398	F	S06	6 x 11.66 x 34.4	

MODEL	YEAR	CC	No. Cyls	IN/ EX	VALVE PART NUMBER	DIMENSIONS	MAT.	SA CG
SSANGYONG								
Korando E20/ E23/E32	1996	1998 2295	4 4	In	MBVI899000	35 x 7 x 101.5	C	45-1
Musso E20/ E32		3199	V6	Ex	MBVX899000	31 x 7 x 103.6	P	45-1
MJE	2001							
SSANGYONG	**DIESEL**							
Korando TD	1995	2299	4	In	MBVI870000	38 x 8 x 106.4	P	45-1
Musso TD		2874	5					
MJ TD	2001			Ex	MBVX870000	35 x 9 x 106.4	P	45-1
Engs. OM602, 662								

OE PART NUMBER	VALVE GUIDE PART NUMBER	GUIDE TYPE	MAT.	DIMENSIONS	OE PART NUMBER
1110531101 1110501227 1110501257	G11039 G11039	F F	G-1 G-1	7.02 x 12.56 x 37.5 7.02 x 12.56 x 37.5	6060530230 6060530230
6010531701 6010501227	01-2099 01-2101	F-1 F-1	G G	8 x 14.03 x 39.5 9 x 14.03 x 37.5	6010500624 6010500924

MODEL	YEAR	CC	No. Cyls	IN/ EX	VALVE PART NUMBER	DIMENSIONS	MAT.	SA CG
SUBARU								
Justy Eng. G13BA	1995	1298	4	In Ex	SZVI665000 SZVX665000	36 x 7 x 115.5 30 x 7 x 114.6	C P	45-1 45-1
Justy 1.3i 16v Eng. G13BB	2001	1298	4	In Ex	SZVI750000 SZVX750000	29.1 x 5.5 x 92.3 24.9 x 5.5 x 79.9	P P	45-1 45-1
Justy G3X Eng. M13A	2004	1328	4	In Ex	SZVI780002 SZVX780002	30 x 5.5 x 101 25 x 5.5 x 99	P P	45-1 45-1
Impreza Impreza AWD Legacy Engs. EJ16/EJ18	1992 1990	1597 1820	4 4	In Ex	SBVI879000 SBVX879000	31 x 6 x 101 27 x 6 x 101.3	C C	45-1 45-1
Impreza GT Legacy Engs. EJ20G/GN	1993 1990	1994	4	In Ex	SBVI920000 SBVX920000	36 x 6 x 93.2 32 x 6 x 93.6	C C	45-1 45-1
Impreza Eng. EJ20E	08/1995	1994	4	In Ex	SBVI920001 SBVX920001	36 x 6 x 105.9 32 x 6 x 106.2	C C	45-1 45-1
Forester Turbo Impreza WRX Impreza Impreza Turbo Engs. EJ20/ EJ205/EJ207	2001 2001 08/1999	1994	4	In Ex	SBVI920002 SBVX920002	35.9 x 6 x 104.4 32 x 6 x 104.6	C C	45-1 45-1
Forester Legacy Eng. EJ20J/ EJ201	07/1997 1999	1994	4	In Ex	SBVI920003 SBVX920003	34 x 6 x 120.6 30 x 6 x 121.6	C C	45-1 45-1
Legacy 2.5 16v Outback 2.5 16v EJ251	2004	2457	4	In Ex	SBVI995000 SBVX995000	36 x 6 x 120.6 31.4 x 6 x 121.7	C C	45-1 45-1

OE PART NUMBER	VALVE GUIDE PART NUMBER	GUIDE TYPE	MAT.	DIMENSIONS	OE PART NUMBER
12911-82010 12915-82062	G3277 G3277	P P	G G	7 x 12.05 x 48 7 x 12.05 x 48	
12911-71C00 12915-71C50 12915-71000	G11280 G11280	P-6 P-6	S03 S03	5.50 x 11.10 x 32 5.50 x 11.10 x 32	11115-60B11 11115-60B11
12911-54G00 12915-54G00	G11470 G11470	P-6 P-6	S03 S03	5.50 x 10.60 x 40 5.50 x 10.60 x 40	11115-54G00-001 11115-54G00-001
13201-AA072 13201-AA180 13202-AA161 13202-AA102	G11363 G11363	P P	S06 S06	6 x 11.08 x 52.5 6 x 11.08 x 52.5	13212-AA040 13212-AA040
13201-AA250 13202-AA270 13202-AA281	G11276 G11278	P-6 P-6	S06 S03	6 x 11.08 x 39.5 6 x 11.08 x 47.5	13212-AA130 13212-AA120
13201-AA340 13202-AA320	G11276 G11278	P-6 P-6	S06 S03	6 x 11.08 x 39.5 6 x 11.08 x 47.5	13212-AA130 13212-AA120
13201-AA390 13202-AA400	G11276 G11278	P-6 P-6	S06 S03	6 x 11.08 x 39.5 6 x 11.08 x 47.5	13212-AA130 13212-AA120
13201-AA351 13202AA361	G11276 G11278	P-6 P-6	S06 S03	6 x 11.08 x 39.5 6 x 11.08 x 47.5	13212-AA130 13212-AA120
13201-AA361 13202-AA371	G11363 G11363	P P	S06 S06	6 x 11.08 x 52.5 6 x 11.08 x 52.5	13212-AA040 13212-AA040

MODEL	YEAR	CC	No. Cyls	IN/ EX	VALVE PART NUMBER	DIMENSIONS	MAT.	SA CG
SUZUKI								
Jimny Samurai Swift Engs. F10A/ G10A/B G13A 8v	1983	970 993 1298 1325	4 4 4 4	In Ex	SZVI665000 SZVX665000	36 x 7 x 115.5 30 x 7 x 114.6	C P	45-1 45-1
Wagon R Wagon R+ Eng. K10A	1997	996	4	In Ex	SZVI680000 SZVX680000	24.6 x 5.5 x 80.2 21.5 x 5.5 x 81.3	P P	45-1 45-1
Alto 1.1 Eng. RF410	2004	1061	4	In Ex	SZVI685000 SZVX685000	26.6 x 5.5 x 90.5 23.4 x 5.5 x 78.1	C P	45-1 45-1
Alto 1.0 Eng. G10B	1998	993	4	In Ex	SZVI720000 SZVX720000	34 x 7 x 117.5 28.1 x 7 x 116.3	C C	45-1 45-1
Splash 1.0 12v Splash 1.2 16v Engs, K10B/K12B	2007	996 1242	3 4	In Ex	SZVI730000A SZVX730000A	27.47 x 5.5 x 87.5 22.9 x 5.5 x 87.06		45-1 45-1
Swift 1.3 GTi Eng. G13B	1989	1298	4	In Ex	SZVI740000 SZVX740000	29 x 5.5 x 105.4 24 x 5.5 x 104.7	C P	45-1 45-1
Baleno Carry Jimny Swift Vitara & Grand Engs. G13B/BB G16B/BA SQ416V.SY416	1995 2000 1998	1299 1590	4 4	In Ex	SZVI750000 SZVX750000	29.1 x 5.5 x 92.3 24.9 x 5.5 x 79.9	P P	45-1 45-1
Vitara Eng. G16A	1988	1590	4	In Ex	SZVI750001 SZVX750001	36.6 x 7 x 115.6 32.5 x 7 x 114.5	C C	45-1 45-1
Vitara 2.0 Eng. H20A 24v	06-1995	1998	V6	In Ex	SZVI780000 SZVX780000	30 x 6 x 86.2 25 x 6 x 85.9	C P	45-1 45-1
Ignis Jimny Eng. M13A 16v Liana 1.6i Eng. M16A 16v	2001 2000 02-04	1328 1586	4	In Ex	SZVI780001 SZVX780001	30 x 6 x 100.8 25 x 6 x 99	P P	45-1 45-1
Ignis Jimny Wagon R Eng. M13A 16v Liana 1.6i SX4 1.6i Vitara 1.6i Eng. M16A	2004 2001 2006 2005	1328 1586	4	In Ex	SZVI780002 SZVX780002	30 x 5.5 x 101 25 x 5.5 x 99	P P	45-1 45-1
Baleno Grand Vitara Engs.SY418/ SQ420V	1999	1800 1995	4 4	In Ex	SZVI840000 SZVX840000	33 x 6 x 86.2 28 x 6 x 85.9	P P	45-1 45-1

OE PART NUMBER	VALVE GUIDE PART NUMBER	GUIDE TYPE	MAT.	DIMENSIONS	OE PART NUMBER
12911-82000 12911-82010 12915-82000 12915-82062 12915-82050	G3277 G3277	P P	G G	7 x 12.05 x 48 7 x 12.05 x 48	11115-82000 11115-82000
12911-73G00 12915-73G00	G11438 G11438	P-6 P-6	G G	5.5 x 10.57 x 29.4 5.5 x 10.57 x 29.4	11115-73G01-001 11115-73G01-001
12911-M84400/84420 12915-M84400/84440					
12911-M72F10 12915-M72F10	G3277 G3277	P P	G G	7 x 12.05 x 48 7 x 12.05 x 48	11115-82000 11115-82000
4708925 4708933	G11508 G11508	P-2 P-2	G G	5.5 x 10.57 x 34 5.5 x 10.57 x 34	11115-77G00-1 11115-77G00-1
12911-86511 12915-85660/96561	G11280 G11280	P-6 P-6	S03 S03	5.50 x 11.07 x 32 5.50 x 11.07 x 32	11115-60B11 11115-60B11
12911-71C00 12915-71C50 12915-71000	G11280 G11280	P-6 P-6	S03 S03	5.50 x 11.07 x 32 5.50 x 11.07 x 32	11115-60B11 11115-60B11
12911-60A10 12915-60A50	G3277 G3277	P P	G G	7 x 12.05 x 48 7 x 12.05 x 48	11115-82000 11115-82000
12911-85FA0 12915-85FA0					
12911-69G00 12915-69G50	G11304 G11304	P-6 P-6	S03 S03	6 x 11.07 x 40 6 x 11.07 x 40	11115-69G00 11115-69G00
12911-54G00 12915-54G00 12915-54G50	G11470 G11470	P-6 P-6	G G	5.50 x 10.60 x 40 5.50 x 10.60 x 40	11115-54G00-001 11115-54G00-001
12911-86FA0 12915-86F50	G11306 G11306	P P	S03 S03	6 x 11.07 x 35 6 x 11.07 x 35	11115-85FAO 11115-85FAO

MODEL	YEAR	CC	No. Cyls	IN/ EX	VALVE PART NUMBER	DIMENSIONS	MAT.	SA CG
SUZUKI DIESEL								
Wagon R Eng. Z13DT	2004	1248	4	In Ex	FTVI730000 FTVX730000	21.9 x 6 x 109.2 21.9 x 6 x 109.2	P P	45-3 45-3
Ignis Splash Wagon R Eng. Z13DT 16v	2008	1248	4	In Ex	FTVI730001 FTVX730001	22.45 x 6 x 109.2 22.5 x 6 x 109.2	P P	45-3 45-3
Liana Eng. RB414D	2004	1398	4	In Ex	CTVI737000 CTVX737000	24.3 x 5.5 x 96.4 22.4 x 5.5 x 96.6	C P	45-3 45-3
Jimny 1.5DDiS Eng. K9K	2003	1461	4	In Ex	RNVI760000 RNVX760000	33.4 x 6 x 101 28.9 x 6 x 100.8	P P	45-3 45-3
SX4 1.9DDiS Eng. D19AA	2006	1910	4	In Ex	FTVI820004 FTVX820004	35.5 x 8 x 115 34.5 x 8 x 115	P P	45-3 45-3
Baleno 1.9TD Samurai 1.9TD Vitara 1.9D/TD Eng. XUD9/ XUD9TE	1995	1905	4	In Ex	PGVI830001 PGVX830001	38.5 x 8 x 112.3 33 x 8 x 112	P P	45-1 45-1
Grand Vitara HDi Eng. RHZ	2001	1997	4	In Ex	PGVI850000 PGVX850000	35.6 x 6 x 107.1 33.8 x 6 x 107.1	P P	45-3 45-3
Grand Vitara TDi Eng. RHW	2002	1997	4	In Ex	PGVI850003 PGVX850003	29.9 x 6 x 106.2 25 x 6 x 106.2	P P	45-3 45-3
Grand Vitara TD Eng. RF	1998	1998	4	In Ex	SZVI860000 SZVX860000	39.4 x 8 x 106.8 35.1 x 8 x 106.7	P p	30-1 45-1
Vitara TD Eng. RF	1994	1998	4	In Ex	MZVI860002 MZVX860002	41 x 8 x 106.9 36 x 8 x 106.8	P P	45-1 45-1

OE PART NUMBER	VALVE GUIDE PART NUMBER	GUIDE TYPE	MAT.	DIMENSIONS	OE PART NUMBER
12911-85E00 12915-85E00	G11310 G11310	P P	G G	6.02 x 10.03 x 43 6.02 x 10.03 x 43	46816601 46816601
55204574 55223836	G11310 G11310	P P	G G	6.02 x 10.03 x 43 6.02 x 10.03 x 43	46816601 46816601
12911-73J00 12915-73J00	G11413 G11413	A1 A1	G G	5.5 x 9.54 x 34 5.5 x 9.54 x 34	
	G11308 G11308	F F	B B	6 x 11.07 x 40.5 6 x 11.07 x 40.5	
7565472 46433782 46433783	G11000 G11000	F F	G1 G1	8.02 x 14.03 x 43 8.02 x 14.03 x 43	
12911-86CA0 12911-66G00 12832-66G00 12915-86CA0 12915-66G00	G3163 G3163	A A	B B	8.01 x 14.06 x 52 8.01 x 14.06 x 52	
	GS11396 GS11396	F F	S06 S06	6 x 12.06 x 42.5 6 x 12.06 x 42.5	11115-67G00 11115-67G00
	GS11396 GS11396	F F	S06 S06	6 x 12.06 x 42.5 6 x 12.06 x 42.5	11115-67G00 11115-67G00
12911-78E00 12915-78E00	G11186 G11188	A-1 A-16	G G	8 x 14.07 x 40 8 x 14.07 x 46.5	11116-78E01 11115-78E00
RF01-12111 RF01-12121B	G3596 G3597	A-1 A-1-6	G G	8.03 x 14.03 x 40.5 8.03 x 14.03 x 37.7	011-10-280 011-10-290

MODEL	YEAR	CC	No. Cyls	IN/ EX	VALVE PART NUMBER	DIMENSIONS	MAT.	SA CG
TOYOTA								
Yaris 16v Yaris 1.6 16v Eng. 1SZ-FE, 2Z-FE	04/1999 2002	998 1298	4	In Ex	TYVI690000 TYVX69000	26 x 5 x 88.2 22.6 x 5 x 89.2	C C	45-1 45-1
Aygo Yaris 1.0iVVT 12v Eng. 1KR-FE	2006	998	3	In Ex	TYVI710002 TYVX710002	27.5 x 5 x 88.5 23.6 x 5 x 89.1		45-1 45-1
IQ Urban Cruiser Yaris Eng. 1NR-FE	2011	1329	4	In Ex	TYVI725000 TYVX725000	28.9 x 5.5 x 103.4 24.3 x 5.5 x 104.6	P P	45-1 45-1
Corolla 16v Starlet 16v Tercel Engs. 4E-FE/ 5E-FE	1992 1996 1992	1332 1496	4 4	In Ex	TYVI740000 TYVX740000	28.5 x 6 x 93.5 24.5 x 6 x 94	C C	45-1 45-1
Yaris Prius Engs. 1NZ-FE/ 2NZ-FE 16V	2001	1299 1497	4 4	In Ex	TYVI750000 TYVX750000	30.5 x 5 x 89.2 25.4 x 5 x 88	C C	45-1 45-1
Lexus IS200 Eng. 1G-FE	1999	1988	6	In Ex	LXVI750000 LXVX750000	29.5 x 5 x 91.7 25 x 5 x 91.8	C C	45-1 45-1
Carina Corrolla Engs. 2A, 3A, 4A	1979	1295 1452 1587	4 4 4	In Ex	TYVI775000 TYVX775000	36 x 7 x 106.7 31 x 7 x 106.7		45-1 45-1
Avensis Corolla Engs. 1.4 4ZZ=FE 1.6 3ZZ-FE 1.8 1ZZ-FE	2000	1398 1598 1794	4 4 4	In Ex	TYVI790000 TYVX790000	31 x 5.5 x 88.7 26.1 x 5.5 x 88.7	C C	45-1 45-1
Celica Rav 4 Engs. 1.8 1ZZ-FE	2000	1794	4	In Ex	TYVI790001 TYVX790001	32 x 5.5 x 88.7 27.5 x 5.5 x 88.7	C C	45-1 45-1
Auris 1.6 Eng. 1ZR-FE Yaris 1.8 Eng. 2ZR-FE Avensis 2.0 Rav 4 2.0 Eng. 3ZR-FE	2006 2009	1598 1797 1987	4	In Ex	TYVI805000 TYVX805000	32 x 5.5 x 109.4 27.5 x 5.5 x 108.3	C C	45-1 45-1
Celica Corolla Eng. 4AF	1987 1989	1587	4	In Ex	TYVI810000 TYVX810000	30 x 6 x 91.3 24.5 x 6 x 91.9	C C	45-1 45-1

OE PART NUMBER	VALVE GUIDE PART NUMBER	GUIDE TYPE	MAT.	DIMENSIONS	OE PART NUMBER
13711-23030 13711-97401 13715-23030 13715-97401	G11364 G11364	P-1 P-1	G G	5 x 9.74 x 34.5 5 x 9.74 x 34.5	11122-21010 11122-21010
13711-40040 13715-40040	G11364 G11364	P-1 P-1	G G	5 x 9.74 x 34.5 5 x 9.74 x 34.5	11122-21010 11122-21010
13711-47010 13715-47010					
13711-11012 13711-11011 13715-11030	G3499 G3499	P P	G G	6.01 x 11.04 x 40.5 6.01 x 11.04 x 40.5	11122-10040 11122-10040
13711-21010 13715-21010	G11364 G11364	P-1 P-1	G G	5 x 9.74 x 34.5 5 x 9.74 x 34.5	11122-21010 11122-21010
13711-70060 13715-70080					
13711-15010 13715-15010	01-2058 01-2059	P-1 P-1	G G	7.02 x 11.54 x 43 7.02 x 11.54 x 49	11122-15020 11126-15020
13711-22040 13711-0D020 13715-22040 13715-0D020	01-2699 G11365 Alt OD 01-2699 G11365 Alt OD	P P P P	G G G G	5.51 x 10.34 x 34.5 5.5 x 10.04 x 34.5 5.51 x 10.34 x 34.5 5.5 x 10.04 x 34.5	11122-20020 11122-20020
13711-22030 13715-22030	01-2699 G11365 Alt OD 01-2699 G11365 Alt OD	P P P P	G G G G	5.51 x 10.34 x 34.5 5.5 x 10.04 x 34.5 5.51 x 10.34 x 34.5 5.5 x 10.04 x 34.5	11122-20020 11122-20020
13711-37020 13715-37030	G11365 G11365	A-1 A-1	G G	5.5 x 10.04 x 34.5 5.5 x 10.04 x 34.5	11122-20020 11122-20020
13711-15030 13711-15050 13715-15030	G11439 G11439	P P	G G	6.01 x 11.05 x 38.4 6.01 x 11.05 x 38.4	11122-15030 11112-15030

MODEL	YEAR	CC	No. Cyls	IN/ EX	VALVE PART NUMBER	DIMENSIONS	MAT.	SA CG
Carina Corolla Engs. 4A-GE/L	1985	1587	4	In Ex				
Avensis Celica Corolla Eng. 4AF-E/ 7AF-E	1997 1995 1993	1587 1762	4 4	In Ex	TYVI810001 TYVX810001	31.1 x 6 x 87.5 24.5 x 6 x 87.9	C C	45-1 45-1
Celica 1.8T Sport Eng. 2ZZ-G3 Corolla 1.8 16v Eng. 2ZZ-GE	2001 2002	1796	4	In Ex	TYVI820000 TYVX820000	34 x 5.5 x 111.3 29 x 5.5 x 111.7	C C	45-1 45-1
Supra Engs. 7M-GE 7M-GTE	1986	2977	6	In Ex				
Camry Celica MR2 Eng. 3SF-E 16v	1987- 1992	1998	4	In Ex	TYVI860000 TYVX860000	32 x 6 x 100.7 27 x 6 x 100.5	C C	45-1 45-1
Celica MR2 Inc. Turbo Engs. 3S-FE 3S-GE NLA when stocks exhausted	1986- 1989	1998	4	In Ex	TYVI860001 TYVX860001	33.4 x 6 x 103 29 x 6 x 102	C C	45-1 45-1
Carina Celica MR2 Engs. 3S-GE 3S-GTE	1989	1998	4	In Ex	TYVI860002 TYVX860002	33.5 x 6 x 100 29 x 6 x 99.1	C P	45-1 45-1
Avensis Carina Picnic Rav 4 Engs. 3S-FE	1997 1986 1996 1994	1998	4	In Ex	TYVI860003 TYVX860003	32 x 6 x 97.6 26.9 x 6 x 98.4	C C	45-1 45-1
Avensis Rav 4 Eng. 1AZ-FE/FSE	2000	1998	4	In Ex	TYVI860005 TYVX860005	33.9 x 5.5 x 101.7 29.5 x 5.5 x 101.1	C C	45-1 45-1
Hiace Liteace Townace Engs 1Y, 2Y, 3Y 4Y	1983	1626 1812 1998	4	In Ex	TYVI860007A TYVX860007A	40.1 x 8 x 108.3 36 x 8 x 108.6		45-1 45-1

OE PART NUMBER	VALVE GUIDE PART NUMBER	GUIDE TYPE	MAT.	DIMENSIONS	OE PART NUMBER
	01-2349 01-2349	P-1 P-1	G G	6.01 x 11.05 x 40.5 6.01 x 11.05 x 40.5	11122-16020 11122-16020
13711-02030 13711-15090 13711-16090 13715-15070	G11439 G11439	P P	G G	6.01 x 11.05 x 38.4 6.01 x 11.05 x 38.4	11122-15030 11112-15030
13711-88600 13715-88601	01-S2662 G11365 Alt OD 01-S2662 G11365 Alt OD	P P	S06 S06	5.51 x 10.55 x 43 5.5 x 10.04 x 34.5 5.51 x 10.55 x 43 5.5 x 10.04 x 34.5	11122-88600 11122-88600
	01-2348 01-2349	P-1 P-1	G G	6.01 x 11.05 x 37 6.01 x 11.05 x 40.5	11122-42010 11122-16020
13711-74020 13711-74040 13715-74020	G11505 G11506	P P-1	G-1 G-1	6.01 x 11.03 x 38.5 6.01 x 11.03 x 40.5	11122-74030 11122-16010
13711-88361 13715-88360					
13711-88460 13715-88480 13715-88361	01-S2762 01-S2762	P P	S03 S03	6.01 x 11.04 x 42 6.01 x 11.04 x 42	11122-88460 11122-88460
13711-74101 13715-74100	G11505 G11506	P P-1	G-1 G-1	6.01 x 11.03 x 38.5 6.01 x 11.03 x 40.5	11122-74030 11122-16010
13711-28010 13715-28010	G11538 G11366 01-2743 G11367	P P P P	G G G-1 G	5.51 x 10.34 x 38.4 5.5 x 10.05 x 38.4 5.51 x 10.34 x 40.5 5.5 x 10.05 x 52	11122-28010 11126-20020
13711-71010 13715-71010	01-2358 01-2358	P-1 P-1	G G	8.01 x 13.04 x 48.5 8.01 x 13.04 x 48.5 3Y & 4Y only Check dims. For 1&2Y	11122-63020 11122-63020

MODEL	YEAR	CC	No. Cyls	IN/ EX	VALVE PART NUMBER	DIMENSIONS	MAT.	SA CG
Pick-up 4 Runner Eng. 3VZ-E	1988	2959	V6	In Ex	TYVI875000 TYVX875000	42 x 8 x 104.3 34.9 x 8 x 104	C C	45-1 45-1
4 Runner Lite-Ace Town-Ace Fork truck Eng.4Y	1988 1992 1987	2237	4	In Ex				
Previa 2WD/4WD Eng. 2TZ-FE	1990	2438		In Ex	TYVI950000 TYVX950000	36 x 6 x 103.5 30.5 x 6 x 103.6	C C	45-1 45-1

OE PART NUMBER	VALVE GUIDE PART NUMBER	GUIDE TYPE	MAT.	DIMENSIONS	OE PART NUMBER
13711-65010 13715-65010					
	01-2358 01-2359	P P	G G-1	8.01 x 13.04 x 48.5 8.01 x 13.04 x 52	11122-63020 11126-63020
13711-76020 13711-76040 13715-76030 13715-75050					

MODEL	YEAR	CC	No. Cyls	IN/ EX	VALVE PART NUMBER	DIMENSIONS	MAT.	SA CG
TOYOTA DIESEL								
Auris 1.4 D4D Yaris TDi Corolla TDi IQ TDi Urban Cruiser TDi Eng. 1ND-TV	2002 2004 2010	1364	4	In Ex	TYVI710000 TYVX710000	30.6 x 6 x 100 28 x 6 x 99.8	C C	45-1 45-1
Aygo 1.4D	2004	1398	4	In Ex	PGVI770000 PGVX770000	32.8 x 5.5 x 97.3 30.3 x 5.5 x 97.3	C p	45-3 45-3
Avensis Corolla Previa Rav4 TD Eng. 1CDF-TV	2000	1995	4	In Ex	TYVI822000 TYVX822000	28 x 6 x 102.6 24 x 6 x 102	P P	45-1 45-1
Corolla 1.9D Eng. 1WZ (DW8)	1999	1868	4	In Ex	PGVI830000 PGVX830001	38.5 x 8 x 112.3 33 x 8 x 112	P P	45-1 45-1
Camry Carina Corolla Town-Ace Eng. 1C, 1CL, 2C	1984 1983 1982 1983	1839 1974	4 4	In Ex	TYVI860004 TYVX860006	38.5 x 8 x 105.5 32.5 x 8 x 106.5	P P	45-1 45-1
Avensis Corolla Picnic Engs. 2CT, 3CT	1998	1975 2184	4 4	In Ex	TYVI860004 TYVX860004	38.5 x 8 x 105.7 32.4 x 8 x 105.3	P P	45-1 45-1
Auris 2.0 D4D Eng. 1AD-FTV 16v Auris 2.2 D4D Avensis 2.2 D4D Corolla Verso Rav 4 Lexus IS220D 16v 2AD-FTV	2006 2007	1998 2230	4	In Ex	TYVI860008A TYVX860008A	30 x 6 x 104.5 27 x 6 x 104.1		45-1 45-1
Cressida Four Runner Hi-ace Hi-lux Land Cruiser Engs. L, 2L, 3L Inc. Turbo	1983- 88 1990- 94 1990 1990 1990	2446 2779	4 4	In Ex	TYVI920000 TYVX920000	42.5 x 8 x 103.5 36 x 8 x 103.3	P P	45-1 45-1
Land Cruiser Engs. 1KZ-T 1KZ-TE	1994	2982	4	In Ex	TYVI920000 TYVX920001	42.5 x 8 x 103.5 37.1 x 8 x 103.5	P P	45-1 45-1
Hi-lux 2.5 D4D Eng. 2KD-FTV	2006	2494	4	In Ex	TYVI920002A TYVX920002A	30.5 x 6 x 105.6 26.5 x 6 x 105.8		45-1 45-1

OE PART NUMBER	VALVE GUIDE PART NUMBER	GUIDE TYPE	MAT.	DIMENSIONS	OE PART NUMBER
13711-33030 13715-33040	G11368 G11368	P P	G G	6.01 x 11.04 x 40.6 6.01 x 11.04 x 40.6	11122-30020 11122-30020
	G11413 G11413	A1 A1	G G	5.5 x 9.54 x 34 5.5 x 9.54 x 34	
13711-27010 13715-27010	G11369 G11369	P P	G G	6.01 x 11.04 x 40.6 6.01 x 11.04 x 40.6	11122-27010 11122-27010
	G3163 G3163	A A	B B	8.01 x 14.06 x 52 8.01 x 14.06 x 52	
13711-64010 13711-64011 13715-64010	01-1448 01-1448	P-16 P-16	G G	8.01 x 13.04 x 50 8.01 x 13.04 x 50	11126-24020 11126-24020
13711-64020 13711-64030 13715-64030 13715-64040	01-2703 01-S2704	P P	G S03	8.01 x 13.04 x 46 8.01 x 13.04 x 50	11122-64010 11126-64030
13711-OR010 13715-OR010	G11368 G11368	P P	S-03 S-03	40.6 x 6.01 x 11.09 40.6 x 6.01 x 11.09	11122-30020 11122-30020
13711-54020 13711-54010 13711-17010 13715-54040 13715-17010	G11249 G11249	P P	G G	8.01 x 13.04 x 40 8.01 x 13.04 x 40	11122-68010 11122-68010
13711-54020 13715-67020	G11249 G11249	P P	G G	8.01 x 13.04 x 40 8.01 x 13.04 x 40	11122-68010 11122-68010
13711-20040 13715-30040	G11368 G11368	P P	S-03 S-03	40.6 x 6.01 x 11.09 40.6 x 6.01 x 11.09	11122-30020 11122-30020

MODEL	YEAR	CC	No. Cyls	IN/ EX	VALVE PART NUMBER	DIMENSIONS	MAT.	SA CG
Landcruiser 24v TDi Eng. 1HD-FTE	1998	4164	6	In Ex	TYVI940000 TYVX940000	33 x 7 x 127.2 30.5 x 7 x 127.3	P P	45-1 45-1
Landcruiser 90 16v Eng. 1KD-FTV	2000	2982	4	In Ex	FDVI960000 FDVX960000	32.2 x 6 x 105.4 27.7 x 6 x 105.4	P P	45-1 45-1
Coaster Landcruiser Eng. 3B	1981	3431	4	In Ex				

OE PART NUMBER	VALVE GUIDE PART NUMBER	GUIDE TYPE	MAT.	DIMENSIONS	OE PART NUMBER
13711-17020 13711-17021 13715-17030	G11370 G11370	P-1 P-1	G G	7 x 11.54 x 52.5 7 x 11.54 x 52.5	11122-17010 11122-17010
13711-30030 13715-30030	G11368 G11368	P-1 P-1	G G	6 x 11.04 x 40.6 6 x 11.04 x 40.6	11122-30020 11122-30020
	01-2455 01-2455	P P	G G	9.02 x 14.04 x 60 9.02 x 14.04 x 60	11122-56030 11122-56030

MODEL	YEAR	CC	No. Cyls	IN/ EX	VALVE PART NUMBER	DIMENSIONS	MAT.	SA CG
VOLKSWAGEN								
Golf Lupo Polo Engs. AER, ALL	1998 1996	999	4	In Ex	ADVI671000 ADVX671000	31 x 7 x 94.7 26 x 7 x 94.4	P P	45-3 45-3
Lupo Polo Eng. ALD, ANV, AUC	1999	999	4	In Ex	ADVI671001 ADVX671001	31 x 6 x 99 26 x 6 x 99	P P	45-3 45-3
Beetle 1.2TSi Golf 1.2TSi Jetta 1.2 TSi Touran 1.2TSi Caddy 1.2TSi Engs, CBZA/ZB	2011	1197	4	In Ex	ADVI710000 ADVX710000	35.5 x 6 x 98.7 30 x 6 x 98.3	C P	45-.3 45-3
Golf CL, GL Jetta CL, GL Polo C, Fox Polo, Coupé Engs. 2G, HZ AAK, AAU, AAV, ACM	1985 - 91 1991 1985	1043 1272	4 4	In In Ex	ADVI750001 ADVI750000 ADVX750000	36 x 7.97 x 98.8 32 x 7.97 x 99.3 28.8 x 7.97 x 99	P P P	45-3 45-3 45-3
Polo Eng. AAU, AEV (32mm head dia. On inlet valve)	1992	1043	4	In Ex	ADVI750003 ADVX750002	32 x 7 x 99.2 28.8 x 7 x 99	P P	45-3 45-3
Golf 1.3 Golf 1.4 Polo 1.4 End ABD, 2G, 3F, NZ, AAV	1989/94 8/1991 to 1994	1272 1390	4 4	In In Ex Ex	ADVI750000 ADVI750004 ADVX750000 ADVX750002	32 x 7.97 x 99.3 35.9 x 7 x 99.2 28.8 x 7.97 x 99 28.8 x 7 x 99	P P P P	45-3 45-3 45-3 45-3
Golf Ecomatic Golf Variant Polo 45 Engs. AEV, ABD	1994 6/1995	1043 1391	4 4	In Ex	ADVI750002 ADVX750002	33.9 x 7 x 99.1 28.8 x 7 x 99	P P	45-3 45-3
Bora 1.4 16V Golf 1.4 16V Lupo 1.4 16V Lupo 1.6 GTi 16V Polo 1.6 16V Touran Engs. AHW, AKU, AUA, AUB, AJV, ARC, ATN, AUS, AZC, BBY, BBZ, BKY	1998 1995 1998	1390 1598	4 4	In Ex	ADVI765000 ADVX765000	29.5 x 6 x 100.9 26 x 6 x 100.6	C P	45-3 45-3

OE PART NUMBER	VALVE GUIDE PART NUMBER	GUIDE TYPE	MAT.	DIMENSIONS	OE PART NUMBER
030109601AG 030106601AC 030109611N	G11181 G11181	G G	B B	7 x 11.07 x 33 7 x 11.07 x 33	032103419A 032103419A
030109601AK 030109611S	G3552 G3552	F F	B B	6 x 11.06 x 35.9 6 x 11.06 x 35.9	058103415 058103415
03F109601A 03F109611B 03F109611C					
030109601B-C-D-F 073109601A-D 030109601E 030109611A-B	G2664 G3061 (2G,HK) G2664 G3061 (2G,HK)	G G G G	B B B B	7.98 x 12.06 x 36.5 7.98 x 12.06 x 42.3 7.98 x 12.06 x 36.5 7.98 x 12.06 x 42.3	056103419A 049103419 056103419A 049103419
030109601N-M 030109611D	G11194 G11194	G G	B B	7 x 11.07 x 36.5 7 x 11.07 x 36.5	030103419A 030103419A
030109601E 030109601L 030109611A 030109611D	G2664 G11194 G2664 G11194	G G G G	B B B B	7.98 x 12.06 x 36.5 7 x 11.07 x 36.5 7.98 x 12.06 x 36.5 7 x 11.07 x 36.5	056103419A 030103419A 056103419A 030103419A
030109601G 030109601J 030109611D	G11194 G11194	G G	B B	7 x 11.07 x 36.5 7 x 11.07 x 36.5	030103419A 030103419A
036109601S 036106601AD 036109611K	G3552 G3552	F F	B B	6 x 11.06 x 35.9 6 x 11.06 x 35.9	058103415 058103415

MODEL	YEAR	CC	No. Cyls	IN/ EX	VALVE PART NUMBER	DIMENSIONS	MAT.	SA CG
Polo 1.2 12v Bora FSi 16v EoS 1.4 TSi Golf FS1/TSi 16v Jetta 1.4 TSi Polo FSi 16v Engs. AZQ, BAD, BAG, BKG, BLK, BLP, BME,CAVD	2002	1198 1390 1598	3 4 4	In Ex	ADVI765000 ADVX765000	29.5 x 6 x 100.9 26 x 6 x 100.6	C P	45-3 45-3
Bora Golf Polo Engs. 1.4 AEX, AKV, APQ, 1.6 ABU, AEA, AEE, AHS	1998 1995 1997	1391 1598	4 4	In In Ex	ADVI765001 ADVI765003 (AEA 92-94 only) ADVX765001	35.5 x 7 x 94.7 34.6 x 7 x 94.8 29 x 7 x 95	P P P	45-3 45-3 45-3
Polo 55 Eng. ADX	1994	1297	4	In Ex	ADVI765002 ADVX765001	32.1 x 7 x 94.5 29 x 7 x 95	P P	45-3 45-3
Polo Eng. AFH	1996	1390	4	In Ex	ADVI765004 ADVX765004	29.5 x 6 x 97.9 26.1 x 6 x 97.2	C P	45-3 45-3
Caddy Lupo Polo Eng. AUD	1999 2001 1998	1391	4	In Ex	ADVI765006 ADVX765006	33.5 x 6 x 99.2 28 x 6 x 99.1	P P	45-3 45-3
Polo 1.2 Eng. AWY, BMD	2004	1198	3	In Ex	ADVI765007 ADVX765006	34.5 x 6 x 99.1 28 x 6 x 99.1	P P	45-3 45-3
Bora 20v Golf 20v Passat 20v Passat 30v Engs. ADR, AFY, AGN, APT, ARX, AUM 20v AMX, APR, BBG 30v	1997 1996	1781 2771	4 V6	In Ex	ADVI810000 ADVX810000	27 x 6 x 105.1 29.9 x 6 x 103.8	C P	45-3 45-3
Bora 20v Turbo Golf 20v Turbo Passat 20v Turbo Sharan 20v Turbo Engs. 20v AEB, AGU, AJH, ANB, APU, AQA, AVC, AWT, AWU 30v ACK, AGE, AHA, ALG, APR, AQD	1996	1781	4	In Ex	ADVI810000 ADVX810001	27 x 6 x 105.1 29.9 x 6 x 103.9	P P	45-3 45-3

OE PART NUMBER	VALVE GUIDE PART NUMBER	GUIDE TYPE	MAT.	DIMENSIONS	OE PART NUMBER
036109601S 036106601AD	G3552	F	B	6 x 11.06 x 35.9	058103415
036109611K	G3552	F	B	6 x 11.06 x 35.9	058103415
032109601E 030109601AH 032109601G-F	G11181	G	B	7 x 11.07 x 33	032103419A
032109611G	G11181	G	B	7 x 11.07 x 33	032103419A
030109601AA 030109601AB	G11181	G	B	7 x 11.07 x 33	032103419A
032109611G	G11181	G	B	7 x 11.07 x 33	032103419A
036109601P	G3552	F	B	6 x 11.06 x 35.9	058103415
036109611L	G3552	F	B	6 x 11.06 x 35.9	058103415
030109601AL	G3552	F	B	6 x 11.06 x 35.9	058103415
030109611T	G3552	F	B	6 x 11.06 x 35.9	058103415
032109601L	G3552	F	B	6 x 11.06 x 35.9	058103415
030109611T	G3552	F	B	6 x 11.06 x 35.9	058103415
058109601C	G3552	F	B	6 x 11.06 x 35.9	058103415
058109611M	G3552	F	B	6 x 11.06 x 35.9	058103415
058109601C	G3552	F	B	6 x 11.06 x 35.9	058103415
058109611E	G3552	F	B	6 x 11.06 x 35.9	058103415

MODEL	YEAR	CC	No. Cyls	IN/ EX	VALVE PART NUMBER	DIMENSIONS	MAT.	SA CG
Golf C/CL/GL Jetta C/CL/GL Passat CL Passat CL/GL5 Santana CL/GL Scirocco GT/GTL 8v	1984 1981	1595 1781 1921	4 4 5	In Ex	ADVI810003 ADVX810003	38 x 7.97 x 98.7 33.2 x 8 x 98.5	P P	45-3 45-3
Golf GLi/GTi Jetta GTi Passat GTi Scirocco GTi 8v	1983	1781	4	In Ex	ADVI810001 ADVX810003	40 x 8 x 98.7 33.2 x 8 x 98.5	P P	45-3 45-3
Corrado GT/GTi Golf GTi 16v Jetta GTi 16v Passat GT Scirocco GT, GTX 16v Engs. KR, PL, 9A	1989 1985-88 1988 1985-88	1781 1984	4 4	In Ex	ADVI810002 ADVX810002	32 x 7 x 95.5 28 x 7 x 98.2	P P	45-1 45-1
Jetta Golf Passat Santana Scirocco Transporter Golf/Vento 8v Engines	1985/89 1984/89 1985 1985 1985/89 1991/93	1595 1781 1994 2226	4 4 5 5	In Ex	ADVI810005 ADVX810005	38 x 7.97 x 91.9 33.2 x 7.97 x 90.8	P P	45-3 45-3
Corrado GT/GTi Golf GTi/G60 Jetta GTi Passat GT Scirocco GT, GTX Transporter	1988 1990	1781 1968 1984 2459	4 4 4 5	In Ex	ADVI810004 ADVX810004	40 x 7.97 x 91 33.2 x 7.97 x 91.2	P P	45-3 45-3
Transporter Eng. AAF, ACU, AEN, AET, AEU, AVT	1999	2460	5	In Ex	ADVI810007 ADVX810004	39.5 x 7.97 x 91.9 33.2 x 7.97 x 91.2	P P	45-3 45-3
Bora Golf Passat Engs. AQN, AZX Corrado Golf Passat Sharan Engs. AQP, AUE, AMY, ABV	2000 1997	2324 2793 2862	V5 V6 V6	In Ex	ADVI810010 ADVX810010	39 x 7 x 106 34.2 x 7 x 107	P P	45-3 45-3

OE PART NUMBER	VALVE GUIDE PART NUMBER	GUIDE TYPE	MAT.	DIMENSIONS	OE PART NUMBER
035109603 035109601C-F 035109611F 035109611H	G2664 G3061 G2664 G3061 Guide length required	G G G G	B B B B	7.98 x 12.06 x 36.5 7.98 x 12.06 x 42.3 7.98 x 12.06 x 36.5 7.98 x 12.06 x 42.3	056103419A 049103419 056103419A 049103419
026109601 026109601D 035609611F-H	G2664 G3061 G2664 G3061 Guide length required	G G G G	B B B B	7.98 x 12.06 x 36.5 7.98 x 12.06 x 42.3 7.98 x 12.06 x 36.5 7.98 x 12.06 x 42.3	056103419A 049103419 056103419A 049103419
027109601C 027109611A-B-C-D	G3288 G3288	F F	B B	7 x 12.06 x 38 7 x 12.06 x 38	027103415 027103415
035109601G-H-J-K 034109611B 034109611K	G2664 G3061	G G	B B	7.98 x 12.06 x 36.5 7.98 x 12.06 x 42.3	056103419A 049103419
026109601A 026109601C 034109611B-K 048109611A 053109611	G2664 G2664	G G	B B	7.98 x 12.06 x 36.5 7.98 x 12.06 x 36.5	056103419A 056103419A
048109601A 053109611	G2664 G2664	G G	B B	7.98 x 12.06 x 36.5 7.98 x 12.06 x 36.5	056103419A 056103419A
021109601E 021109601H 021109601J 021109601K 021109601L 021109611D 021109611F 021109611G	G3504 G3504	G G	B B	7 x 12.06 x 38 7 x 12.06 x 38	027103419 027103419

MODEL	YEAR	CC	No. Cyls	IN/ EX	VALVE PART NUMBER	DIMENSIONS	MAT.	SA CG
Bora Golf New Beetle Passat Touran Engs. AVU, AYD, ALZ, BGU	2001 2004	1598	4	In Ex	ADV810011 ADVX810011	39.4 x 6 x 93.8 32.9 x 6 x 93.8	C P	45-3 45-3
Bora VR5 Golf VR5 Passat VR5 Sharan VR5 Engs. AQN, AQP, AVE, AXV, BRN, BTT, BAN, AXZ, BJN, AMV	2005	2350	V5	In/ long short Ex/ Long short	 ADVI810016 ADVI810017 ADVX810016 ADVX810017	 30.9 x 6 x 136.1 31 x 6 x 102.2 27 x 6 x 136.4 27 x 6 x 102.5	 C C P P	 45-3 45-3 45-3 45-3
Golf Passat Vento Eng. ABF 16v	1992 1994 1992	1985	4	In Ex	ADVI825000 ADVX825000	32 x 7 x 95.5 27 x 7 x 98	P P	45-3 45-3
Bora Corrado Golf New Beetle Passat Sharan Vento Engs. ADY, AEH, AEK, AFT, AKL, APF, APK, AQY, AZJ, AZM	1999 1991 1991 1999 1991 1995 1991	1588 1984	4 4	In Ex	ADVI825001 ADVX825001	39.5 x 7 x 91.9 32.9 x 7 x 91.2	C P	45-3 45-3
Golf Passat Vento Eng. AAM, ADZ	1994	1781	4	In Ex	ADVI810006 ADVX825001	37.9 x 7 x 91.7 32.9 x 7 x 91.2	C P	45-3 45-3
Golf FSi 16v Jetta FSi 16v Passat FSi 16v Touran FSI 16v Engs. AXW, BLR, BLX, BLY, BYK, CABB, CAWB, CFPA, CDNB, CDNC,CAEA.	2004 2005 2005 2003	1984	4	In Ex	ADVI825002 ADVX825002	33.8 x 6 x 104 28 x 6 x 101.9	C C	45-3 45-3
LT Eng. AGL	1997	2300	4	In Ex	MBVI899000 MBVX899000	35 x 7 x 101.5 31 x 7 x 103.5	C P	45-1 45-1

OE PART NUMBER	VALVE GUIDE PART NUMBER	GUIDE TYPE	MAT.	DIMENSIONS	OE PART NUMBER
06B109601B 06B109601D 06B109611B 06B109611C	G3552 G3552	F F	B B	6 x 11.06 x 35.9 6 x 11.06 x 35.9	058103415 058103415
022 109 601F 022 109 601E 022 109 611C 022 109 611B					
051109601B 051109611B	G3561 G3561	G G	B B	7 x 12.06 x 35 7 x 12.06 x 35	051103419 051103419
078109601B-A 037109601 048109611B 037109611B	G3593 G3593	G G	B B	7 x 12.06 x 36.5 7 x 12.06 x 36.5	037103419B 037103419B
048109601E 048109611B 037109611B	G11253 G11253 Without shoulder	F F	B B	7 x 12.06 x 35 7 x 12.06 x 35	
06D109601K 06D109611K 06D109611L	G3552 G3552	F F	B B	6 x 11.06 x 35.9 6 x 11.06 x 35.9	058103415 058103415
00A109601A 00A106911	G11039 G11039	F F	G-1 G-1	7.02 x 12.56 x 37.5 7.02 x 12.56 x 37.5	

MODEL	YEAR	CC	No. Cyls	IN/ EX	VALVE PART NUMBER	DIMENSIONS	MAT.	SA CG
VOLKSWAGEN DIESEL								
Golf Jetta Passat Engs. JP, JR, ME, MF, RA, SB	1986	1588	4	In Ex	ADVI765005 ADVX795000	34 x 7.97 x 95.1 31.2 x 8 x 95	P P	45-3 45-3
Lupo 1.2 TDi Engs. ANY, AYZ	1999	1191	3	In Ex	ADVI765008 ADVX765008	35.9 x 7 x 89.7 31.5 x 7 x 89.7	P P	45-3 45-3
Passat TDi Engs. AFB, AKN	1998	2496	V6	In Ex	ADVI783000 ADVX783000	27.2 x 6 x 100.6 24.1 x 6 x 100.6 4mm 1st groove to top of valve	P P	45-3 45-3
Passat TDi Engs. BAU, BDG, BDH	2003	2496	V6	In Ex	ADVI783001 ADVX783001	27.2 x 6 x 100.6 24.1 x 6 x 100.7 9mm 1st groove to top of valve	P P	45-3 45-3
Caddy Golf Passat Polo Transporter Vento Engs. 1S, 1X, 1Y, AAB, AAZ, ACT, AEF, AGD, DW	> 1995	1896 2370 2383 2459	4 5 6 5	In Ex	ADVI795000 ADVX795000	36 x 7.97 x 95.5 31.2 x 7.97 x 95.5	P P	45-3 45-3
Golf TDi Passat TDi Sharan TDi Transporter TDi Vento TDi LT35/46 Engs. 1Z, ACV, AGX, AHD, AHY, AJT, ANJ, AVF, APA, AVR,BBF	1993 1995 2000	1896 2461	4 5	In Ex	ADVI795001 ADVX795001	36 x 7.97 x 96.9 31.5 x 7.97 x 96.9	P P	45-3 45-3

OE PART NUMBER	VALVE GUIDE PART NUMBER	GUIDE TYPE	MAT.	DIMENSIONS	OE PART NUMBER
068109601-M-N	G2664	G	B	7.98 x 12.06 x 36.5	056103419A
068109611 068109611L-M	G2664	G	B	7.98 x 12.06 x 36.5	056103419A
045109601	G3593	G	B	7 x 12.06 x 36.5	037103419B
045109611	G3593	G	B	7 x 12.06 x 36.5	037103419B
059109601B	G11255	F	B	6 x 10.06 x 42	
059109611B	G11255	F	B	6 x 10.06 x 42	
059109601F	G11255	F	B	6 x 10.06 x 42	
059109611G	G11255	F	B	6 x 10.06 x 42	
069109601F-G-H	G2664	G	B	7.98 x 12.06 x 36.5	056103419A
068109611-L-M	G2664	G	B	7.98 x 12.06 x 36.5	056103419A
028109601H	G2664	G	B	7.98 x 12.06 x 36.5	056103419A
046109611F	G2664	G	B	7.98 x 12.06 x 36.5	056103419A

MODEL	YEAR	CC	No. Cyls	IN/ EX	VALVE PART NUMBER	DIMENSIONS	MAT.	SA CG
Bora Golf SDi Polo SDi Passat New Beetle Sharan (from 1Z770.001) Engs. 1Z AEY, AFN, AGR, AHF, AHU, ALE, ALH, ASV	1999 1998	1896	4	In Ex	ADVI795002 ADVX795002	36 x 7 x 96.9 31.5 x 7 x 96.9	P P	45-3 45-3
Bora Golf New Beetle Lupo 1.4 TDi Passat Phaeton Polo Touareg Touran Transporter Engs. TDi 1.4- AMF, BAY, BHC 1.9- AJM, ANU, ARL, ASZ, ATD, AUY, AVB, AVF, AWX, AXB, AXC, BKC, BRU, BRS 2.5- AXD, AXE, BAC, BLK 4.9- AJS, AYH	1999 2000 2001 2004 2001 2005	1422 1896 2461 4921	3 4 5 W10	In Ex	ADVI795003 ADVX795003	36 x 7 x 89.9 31.5 x 7 x 89.9	P P	45-3 45-3
Caddy SDi Lupo SDi Polo SDi Vento SDi Engs. AEY, AGD, AGP, AHB, AHG, AKU, AKW, AQM, ASY	1996	1716 1896	4 4	In Ex	ADVI795004 ADVX795004	36 x 7 x 96.6 31.5 x 7 x 96.4	P P	45-3 45-3
Golf Passat Polo Transporter Vento Engs. 1X, 1Y, AAB, AAZ, ABL, AEF	1995>	1896 2459	4 5	In Ex	ADVI795005 ADVX795005	36 x 7 x 95.5 31.1 x 7 x 95.5	P P	45-3 45-3
Golf 1.9 TDi Polo 1.4 TDi Engs. AMF, BHC, BKC	2003	1422 1896	3 4	In Ex	ADVI795006 ADVX795006	36 x 7 x 89.5 31.5 x 7 x 89.1	P P	45-3 45-3

OE PART NUMBER	VALVE GUIDE PART NUMBER	GUIDE TYPE	MAT.	DIMENSIONS	OE PART NUMBER
028109601D	G3593	G	B	7 x 12.06 x 36.5	037103419B
028109611G	G3593	G	B	7 x 12.06 x 36.5	037103419B
038109601B 045109601 038109601E	G3593 G11257	G G	B F	7 x 12.06 x 36.5 7 x 12.06 x 31.5	037103419B
038109611B 038109611F 045109611 038109611E	G3593 G11257	G G	B F	7 x 12.06 x 36.5 7 x 12.06 x 31.5	037103419B
028109601J	G3593	G	B	7 x 12.06 x 36.5	037103419B
028109611K	G3593	G	B	7 x 12.06 x 36.5	037103419B
028109601C	G3593	G	B	7 x 12.06 x 36.5	037103419B
028109611E	G3593	G	B	7 x 12.06 x 36.5	037103419B
038109601E	G3593	G	B	7 x 12.06 x 36.5	037103419B
038109611E	G3593	G	B	7 x 12.06 x 36.5	037103419B

MODEL	YEAR	CC	No. Cyls	IN/EX	VALVE PART NUMBER	DIMENSIONS	MAT.	SA CG
Golf 1.6TDi Polo 1.6TDi Touran 1.6TDi Engs. CAYA CAYB	2010	1598	4	In Ex	ADVI795007 ADVX795007	26.5 x 6 x 99.3 24.4 x 6 x 99.1	P P	45-3 45-3
Golf 2.0 TDi Touran 2.0 TDi Engs. AZV, BKD	2004	1968	4	In Ex	ADVI810012 ADVX810012	29.4 x 6 x 88.5 25.5 x 6 x 88.2	P P	45-3 45-3
Golf 2.0 TDi Touran 2.0TDi Engs. AZV, BKD, BKP, BMA, BMR 140PS	2004	1968	4	In Ex	ADVI810014 ADVX810014	29.1 x 6 x 87.8 25.4 x 6 x 87.5	P P	45-3 45-3
New Beetle TDi Eng. BEW	2003	1968	4	In Ex	ADVI810009 ADVX810009	35.5 x 7 x 89 31.4 x 7 x 88.4	P P	45-3 45-3
Golf TDi 16v Passat TDi 16v Passat CC TDi Scirroco TDi 16v Tiguan TDi 16v Engs. CBB,CBAB, CBAA	2008 2005 2008 2008 2007	1968	4	In Ex	ADVI810015 ADVX810015	28.1 x 6 x 99.3 26 x 6 x 99.1	C C	45-3 45-3
Phaeton 3.0TDi Toureg 3.0TDi Engs. 24v CARA, CASA/B/C CEXA	2007	2967	V6	In Ex	ADVI830000 ADVX830000	28.8 X 6 X 99.5 26.8 X 6 X 99.4		45-3 45-3
LT46 Engs. AUH, BCQ 12v	2002	2796	4	In Ex	ADVI930000 ADVX930000	33 x 7 x 105.1 39.7 x 7 x 105.1	P P	30-3 45-3

OE PART NUMBER	VALVE GUIDE PART NUMBER	GUIDE TYPE	MAT.	DIMENSIONS	OE PART NUMBER
03L109601A	G11255	F	B	5.98 x 10.06 x 42	
03L109611A	G11255 **NOT CONFIRMED CHECK SIZES BEFORE SELLING.**	F	B	5.98 x 10.06 x 42	
03G109601A	G11255	F	B	6 x 10.06 x 42	
03G109611B	G11255	F	B	6 x 10.06 x 42	
03G109601B	G11255	F	B	6 x 10.06 x 42	
03G109611D	G11255	F	B	6 x 10.06 x 42	
038 109 601F	G3593	G	B	7 x 12.07 x 36.5	037 103 419B
038 109 611G	G3593	G	B	7 x 12.07 x 36.5	037 103 419B
03L 109 601	G11255	F	B	5.99 x 10.06 x 42	
03L 109 611	G11255	F	B	5.99 x 10.06 x 42	
059109601G	G11445	F	B	5.98 x 10.06 x 36	
059109611K	G11445	F	B	5.98 x 10.06 x 36	
062109601	G3593	G	B	7 x 12.06 x 36.5	037103419B
062109611A	G3593	G	B	7 x 12.06 x 36.5	037103419B

MODEL	YEAR	CC	No. Cyls	IN/ EX	VALVE PART NUMBER	DIMENSIONS	MAT.	SA CG
VOLVO								
S40 S50 Eng. B4164S3	2004	1596	4	In Ex	FDVI760005 FDVX760005	30.1 x 6 x 98.9 24.1 x 6 x 101.4	C P	45-3 45-3
S60-B5204T3 S60T5-B5244T, B5234T5 V70 AWD-B5254T S80 B6284T	2000	1984 2319 2435 2783	5 6 5 6	In In Ex	VOVI810000 VOVI810003 VOVX810000	31 x 6 x 104.3 32 x 6 x 104.3 27 x 6 x 103.3	C C C	45-3 45-3 45-3
S70-V70 S80 850 Eng, B5202 10v	1996	1994	5	In Ex	VOVI810002 VOVX810002	40 x 7 x 97.9 35 x 7 x 96.9	C C	45-3 45-3
440, 460 1.8i 440, 460, 480 2.0i Engs. B18U, B20F	1991/96	1794 1998	4 4	In Ex	RNVI827000 RNVX827000	40.2 x 8 x 107 32.6 x 8 x 107	C C	45-1 45-1
S40/V40 16v S60 20v S70, V70 20v 850 850 T5 20v 960 24v Engs. B4164S, S2 B4184S, S2, B4194S, B4204 B5234T, 5244, B5252, B5254 B6254S, B6304S, S2	1996 1992	1731 1834 1855 1984 2319 2435 2473 2922	4 4 4 5 5 5 V6 V6	In Ex	RNVI827003 VOVI827003 RNVX827003	31 x 7 x 104.1 32 x 7 x 104.3 27 x 7 x 103.5	C C C	45-3 45-3 45-3
C30 S40 V50 Eng, B4184S11	2003	1798	4	In Ex	FDVI830000 FDVX830000	32.5 x 5.5 x 103.4 28 x 5.5 x 104.6	C C	45-1 45-1
C30 S40 V50 Eng. B4204S3/S4	2006	1999	4	In Ex	FDVI875000 FDVX875000	35 x 5.5 x 103.4 30 x 5.5 x 104.7	C C	45-1 45-1
240-244 340-360 343-345 740-940 Engs. B200E, ET B200F, B230E B230K B19A, B21A/E B23A/E	1976	1986	4	In Ex	VOVI889000 VOVX889000	44 x 8 x 110.5 35 x 8 x 111	P P	45-3 45-3
740GLT 940GLE Eng. B234F, FB, FD	1988	2316	4	In Ex	VOVI960000 VOVX960000	34.5 x 7 x 112.5 31.5 x 7 x 122.3	P P	45-3 45-3

OE PART NUMBER	VALVE GUIDE PART NUMBER	GUIDE TYPE	MAT.	DIMENSIONS	OE PART NUMBER
30711639	G3499	P	G	6.01 x 11.04 x 40.5	
30711638	G3499	P	G	6.01 x 11.04 x 40.5	
9454607	G11371	F	S03	6 x 11.99 x 45	
9454610	G11371	F	S03	6 x 11.99 x 45	
6842421 1397190	G11203	F	G-1	7 x 11.99 x 39.5	1270397
6842422 1397191	G11203	F	G-1	7 x 11.99 x 39.5	1270397
3344841-6	G11161	P	B	8 x 13.07 x 37.7	3343624
3344842-4	G11161	P	B	8 x 13.07 x 37.7	3343624
13976410 9207874 1270455	G11201	F	G-1	7 x 11.99 x 45	1270391
13668827 1366490 9207880 9207977	G11201	F	G-1	7 x 11.99 x 45	1270391
8694781	G11427		G	5.5 x 11.05 x 39	
8694780	G11427		G	5.5 x 11.05 x 39	
30777329	G11427		G	5.5 x 11.05 x 39	
30777328	G11427		G	5.5 x 11.05 x 39	
463395-4	G2644 01-1563 01-2306	F A A	G G G	8 x 13.5 x 52 8 x 13.5 x 52 8 x 13.5 x 58	419652 463771 1357718
1276687-9 3547247-1 463526-4	G2647 01-1563 01-2308 (guide length & type required)	F A E	G G G	8 x 13.5 x 59.2 8 x 13.5 x 52 8 x 13.5 x 58	 463771 1357723
1317793-6	G3507	F	G	7 x 12 x 55	1378960
1317792-8	G3507	F	G	7 x 12 x 55	1378960

MODEL	YEAR	CC	No. Cyls	IN/ EX	VALVE PART NUMBER	DIMENSIONS	MAT.	SA CG
VOLVO DIESEL								
C30 HDi 16v S40 HDi 16v V50 HDi 16v Eng. D4164T	2004 2006	1560	4	In Ex	CTVI750001 CTVX750001	25.6 x 5.5 x 96.4 23.4 x 5.5 x 96.6	C P	45-3 45-3
C30 D2 8V S40 D2 8V V50 D2 8V Eng. D4162T	2010	1560	4	In Ex	CTVI750003 CTVX750003	30.2 x 5.5 x 95.5 26.6 x 5.5 x 95.5	P P	45-3 45-3
850TDi S70-V70 S80 Eng. AAT/ D5252T	1996	2461	5	In Ex	ADVI795001 ADVX795001	36 x 7.97 x 96.9 31.5 x 7.97 x 96.9	P P	45-3 45-3
360 Eng. D16	1984	1596	4	In Ex	RNVI800001 RNVX800000	36.1 x 8 x 111.7 31.6 x 8 x 111.3	P P	30-1 45-1
460 S40, V40 TD Eng. D19T	1993 1996	1870	4	In Ex	RNVI800004 RNVX800003	35.2 x 8 x 110 31.6 x 8 x 110.2	P P	45-1 45-1
S40/V40 Engs. D4192T2, T3, T4	1999	1870	4	In Ex	RNVI800002 RNVX800002	35.3 x 7 x 110.9 32.6 x 7 x 110.7	P P	45-1 45-1
C30, C70 S40, S60, S80 V50, V70 XC90 Eng. D5244T/T4/ T8	2003	2401	5	In Ex	VOVI810001 VOVX810001	28.8 x 6 x 98.1 26.2 x 6 x 97.1	P P	45-3 45-3
C30 2.0D 16v S40 2.0D 16v V50 2.0D 16v C70 2.0D 16v V70 2.0D 16V Eng. D4204T	2004	1997	4	In Ex	PGVI850002 PGVX850002	29.9 x 6 x 104.9 25 x 6 x 104.9	P P	45-3 45-3

OE PART NUMBER	VALVE GUIDE PART NUMBER	GUIDE TYPE	MAT.	DIMENSIONS	OE PART NUMBER
30711498 30711497	G11413 G11413	A-1 A-1	G G	5.5 x 9.54 x 34 5.5 x 9.54 x 34	
31330181 31330182	G11413 G11413	A-1 A-1	G G	5.5 x 9.54 x 34 5.5 x 9.54 x 34	
0461096011 046109611F	G2664 G2664	G G	B B	7.98 x 12.06 x 36.5 7.98 x 12.06 x 36.5	
3287966-0 3287967-8	G3244 G3244	F F	B B	8 x 13.07 x 39 8 x 13.07 x 39	
3345515 30852144 3345516 30852146	G3244 G3244	F F	B B	8 x 13.07 x 39 8 x 13.07 x 39	
	G13600 01-2651 G13600 01-2651 (check dimensions)	F-1 F F-1 F	B B B B	7 x 12.06 x 38.3 7 x 13.06 x 37.8 7 x 12.06 x 38.3 7 x 13.06 x 37.8	30882363 30882363
30711498 8631650 30711497 8631651	G11507 G11507	F F	G G	6 x 11.52 x 39.5 6 x 11.52 x 39.5	
8653745 8653744	GS11319 GS11319	A A	S06 S06	6.01 x 12.06 x 41.5 6.01 x 12.06 x 41.5	

VALVE SHIMS

POPULAR APPLICATIONS	OE NUMBER	DIMENSIONS	MAT	PART No.	OE NUMBER	DIMENSIONS	MAT	PART No.
ALFA ROMEO		31 x 3.00	A	03-0199	125223	31 x 4.00	A	03-0104
Alfa Sud		31 x 3.05	A	03-0200	125224	31 x 4.05	A	03-0105
33 Quadrifoglio		31 x 3.10	A	03-0201	125225	31 x 4.10	A	03-0106
		31 x 3.15	A	03-0202	125226	31 x 4.15	A	03-0107
		31 x 3.20	A	03-0203	125227	31 x 4.20	A	03-0108
	125208	31 x 3.25	A	03-0204	125228	31 x 4.25	A	03-0109
	125209	31 x 3.30	A	03-0090	125229	31 x 4.30	A	03-0310
	125210	31 x 3.35	A	03-0091	125230	31 x 4.35	A	03-0368
	125211	31 x 3.40	A	03-0092	125231	31 x 4.40	A	03-0369
	125212	31 x 3.45	A	03-0093	125232	31 x 4.45	A	03-0370
	125213	31 x 3.50	A	03-0094	125233	31 x 4.50	A	03-0371
	125214	31 x 3.55	A	03-0095	125234	31 x 4.55	A	03-0372
	125215	31 x 3.60	A	03-0096	125235	31 x 4.60	A	03-0373
	125216	31 x 3.65	A	03-0097	125236	31 x 4.65	A	03-0374
	125217	31 x 3.70	A	03-0098		31 x 4.70	A	03-0611
	125218	31 x 3.75	A	03-0099		31 x 4.75	A	03-0612
	125219	31 x 3.80	A	03-0100		31 x 4.80	A	03-0613
	125220	31 x 3.85	A	03-0101		31 x 4.85	A	03-0614
	125221	31 x 3.90	A	03-0102		31 x 4.90	A	03-0615
	125222	31 x 3.95	A	03-0103		31 x 4.95	A	03-0616

SHIM KIT	68 PIECE KIT	3.00-4.65		03-1075	34 x 2 per size			
	136 PIECE KIT	3.00-4.65		03-1076	34 x 4 per size			

CITROEN		13.42 x 1.50	AN	03-0364	9150750680	13.42 x 2.70	AN	03-0297
Evasion 2.0ie RFU		13.42 x 1.55	AN	03-0973	9150750880	13.42 x 2.75	AN	03-0903
		13.42 x 1.60	AN	03-0365	9150751080	13.42 x 2.80	AN	03-0298
	9456082080	13.42 x 1.65	AN	03-0974	9150751280	13.42 x 2.85	AN	03-0904
	9456082380	13.42 x 1.70	AN	03-0366	9150751480	13.42 x 2.90	AN	03-0299
		13.42 x 1.75	AN	03-0893	9150751680	13.42 x 2.95	AN	03-0905
	9456082680	13.42 x 1.80	AN	03-0367	9150751880	13.42 x 3.00	AN	03-0300
		13.42 x 1.85	AN	03-0894	9153599780	13.42 x 3.05	AN	03-0906
	9456083080	13.42 x 1.90	AN	03-0289	9150992280	13.42 x 3.10	AN	03-0301
	9456083380	13.42 x 1.95	AN	03-0895	9153600080	13.42 x 3.15	AN	03-0907
		13.42 x 2.00	AN	03-0290	9153600180	13.42 x 3.20	AN	03-0302
	9456083680	13.42 x 2.05	AN	03-0896	9150992480	13.42 x 3.25	AN	03-0975
	9456083980	13.42 x 2.10	AN	03-0291	9153600480	13.42 x 3.30	AN	03-0908
		13.42 x 2.15	AN	03-0897	9153600580	13.42 x 3.35	AN	03-0909
	9150748780	13.42 x 2.20	AN	03-0292	9150992680	13.42 x 3.40	AN	03-0976
	9150748880	13.42 x 2.25	AN	03-0898	9153600880	13.42 x 3.45	AN	03-0910
	9150749080	13.42 x 2.30	AN	03-0293	9153600980	13.42 x 3.50	AN	03-0977
	9150749280	13.42 x 2.35	AN	03-0899	9150992880	13.42 x 3.55	AN	03-0911
	9150749480	13.42 x 2.40	AN	03-0294	9456084380	13.42 x 3.60	AN	03-0978
	9150749680	13.42 x 2.45	AN	03-0900	9456084680	13.42 x 3.70	AN	03-0979
	9150749880	13.42 x 2.50	AN	03-0295	9456084980	13.42 x 3.75	AN	03-0980
	9150750080	13.42 x 2.55	AN	03-0901	9456085280	13.42 x 3.85	AN	03-0981
	9150750280	13.42 x 2.60	AN	03-0296	9456085580	13.42 x 3.90	AN	03-0982
	9150750480	13.42 x 2.65	AN	03-0902	9456085880	13.42 x 4.00	AN	03-0983

SHIM KIT	90 PIECE KIT	1.50-3.20		03-1069	18 x 5 per size in .10mm increments			
	180 PIECE KIT	1.50-3.20		03-1070	18 x 10 per size in .10mm increments			

DAIHATSU	550610632	31 x 2.30	A	03-0846	550610662	31 x 3.05	A	03-0861
	550610634	31 x 2.35	A	03-0847	550610664	31 x 3.10	A	03-0862
	550610636	31 x 2.40	A	03-0848	550610666	31 x 3.15	A	03-0863
	550610638	31 x 2.45	A	03-0849	550610668	31 x 3.20	A	03-0864
	550610640	31 x 2.50	A	03-0850	550610670	31 x 3.25	A	03-0865
	550610642	31 x 2.55	A	03-0851	550610672	31 x 3.30	A	03-0866
	550610644	31 x 2.60	A	03-0852	550610674	31 x 3.35	A	03-0867
	550610646	31 x 2.65	A	03-0853	550610676	31 x 3.40	A	03-0868
	550610648	31 x 2.70	A	03-0854	550610678	31 x 3.45	A	03-0869
	550610650	31 x 2.75	A	03-0855	550610680	31 x 3.50	A	03-0870
	550610652	31 x 2.80	A	03-0856	550610682	31 x 3.55	A	03-0871
	550610654	31 x 2.85	A	03-0857	550610684	31 x 3.60	A	03-0872
	550610656	31 x 2.90	A	03-0858	550610686	31 x 3.65	A	03-0873
	550610658	31 x 2.95	A	03-0859	550610688	31 x 3.70	A	03-0874
	550610660	31 x 3.00	A	03-0860				

SHIM KIT	116 PIECE KIT	2.30-3.70		03-1093	29 x 4 per size			

POPULAR APPLICATIONS	OE NUMBER	DIMENSIONS	MAT	PART No.	OE NUMBER	DIMENSIONS	MAT	PART No.
FIAT-LANCIA								
124 Coupé 125 / 127		33 x 2.50	A	03-0001	4152457/4358387	33 x 3.90	A	03-0029
Diesel		33 x 2.55	A	03-0002	4152458/4358388	33 x 3.95	A	03-0030
128 / 130 / 131 / 132 147		33 x 2.60	A	03-0003	4152448/4358373	33 x 4.00	A	03-0031
(Fiorino) Regata Diesel		33 x 2.65	A	03-0004	4152459/4358389	33 x 4.05	A	03-0032
Ritmo Diesel Uno Diesel		33 x 2.70	A	03-0005	4152460/4358390	33 x 4.10	A	03-0033
Tipo/Tempra/Croma		33 x 2.75	A	03-0006	4152461/4358391	33 x 4.15	A	03-0034
Scudo Benzina 1580		33 x 2.80	A	03-0007	4152462/4358392	33 x 4.20	A	03-0035
Coupé 2.0 16v 93-96		33 x 2.85	A	03-0008	4152463/4358393	33 x 4.25	A	03-0036
Punto I 1.6 90CV		33 x 2.90	A	03-0009	4152464/4358394	33 x 4.30	A	03-0037
Punto I GT 1.4		33 x 2.95	A	03-0010	4152465/4358395	33 x 4.35	A	03-0038
Punto II 1.9JTD		33 x 3.00	A	03-0011	4152466/4358396	33 x 4.40	A	03-0039
Doblo Van 1.9D, JTD		33 x 3.05	A	03-0012	4152467/4358397	33 x 4.45	A	03-0040
Stilo 1.9JTD		33 x 3.10	A	03-0013	4152468/4358398	33 x 4.50	A	03-0041
Palio Mpi 1.0 cc.		33 x 3.15	A	03-0014	4162888/4358399	33 x 4.55	A	03-0042
Palio 1.7TD		33 x 3.20	A	03-0015	4162889/4358400	33 x 4.60	A	03-0043
Multipla 1.9JTD Beta	4204141/4358374	33 x 3.25	A	03-0016	4162890/4358401	33 x 4.65	A	03-0044
Thema i.e., Turbo	4204142/4358375	33 x 3.30	A	03-0017	4162891/4358402	33 x 4.70	A	03-0045
	4204143/4358376	33 x 3.35	A	03-0018	4294418	33 x 4.75	A	03-0046
	4204144/4358377	33 x 3.40	A	03-0019	4294419	33 x 4.80	A	03-0047
	4204145/4358378	33 x 3.45	A	03-0020	4294420	33 x 4.85	A	03-0048
	4152449/4358379	33 x 3.50	A	03-0021	4294421	33 x 4.90	A	03-0049
	4152450/4358380	33 x 3.55	A	03-0022		33 x 4.95	A	03-0050
	4152451/4358381	33 x 3.60	A	03-0023		33 x 5.00	A	03-0051
	4152452/4358382	33 x 3.65	A	03-0024		33 x 5.05	A	03-0052
	4152453/4358383	33 x 3.70	A	03-0025		33 x 5.10	A	03-0053
	4152454/4358384	33 x 3.75	A	03-0026		33 x 5.15	A	03-0054
	4152455/4358385	33 x 3.80	A	03-0027		33 x 5.20	A	03-0055
	4152456/4358386	33 x 3.85	A	03-0028				

SHIM KIT	68 PIECE KIT	3.25-4.90		03-1012	34 x 2 per size			
	136 PIECE KIT	3.25-4.90		03-1013	34 x 4 per size			

FIAT-LANCIA		31 x 3.00	A	03-0199	5942861	31 x 4.00	A	03-0104
Panda Tipo Uno 1.1 Carb,		31 x 3.05	A	03-0200	5942877	31 x 4.05	A	03-0105
Spi Punto I 55, 60, 75,		31 x 3.10	A	03-0201	5942878	31 x 4.10	A	03-0106
Cabrio		31 x 3.15	A	03-0202	5942879	31 x 4.15	A	03-0107
Punto II Van	5942889	31 x 3.20	A	03-0203	5942880	31 x 4.20	A	03-0108
1.2 Punto III 1.2 8v	5942862	31 x 3.25	A	03-0204	5942881	31 x 4.25	A	03-0109
Nuova Panda 1.2 8v Palio	5942863	31 x 3.30	A	03-0090	5942882	31 x 4.30	A	03-0310
1.2 Cinquecento	5942864	31 x 3.35	A	03-0091	5942883	31 x 4.35	A	03-0368
1.1 Sport Seicento 1.1 Spi	5942865	31 x 3.40	A	03-0092	5942884	31 x 4.40	A	03-0369
Mpi Doblo Van 1.2 Y10	5942866	31 x 3.45	A	03-0093	5942885	31 x 4.45	A	03-0370
Y 1.1, 1.2 (Mot. Fire)	5942867	31 x 3.50	A	03-0094	5942886	31 x 4.50	A	03-0371
Ypsilon 1.2 8v	5942868	31 x 3.55	A	03-0095	5942887	31 x 4.55	A	03-0372
	5942869	31 x 3.60	A	03-0096	5942888	31 x 4.60	A	03-0373
	5942870	31 x 3.65	A	03-0097	5998315	31 x 4.65	A	03-0374
	5942871	31 x 3.70	A	03-0098	5998317	31 x 4.70	A	03-0611
	5942872	31 x 3.75	A	03-0099	5998319	31 x 4.75	A	03-0612
	5942873	31 x 3.80	A	03-0100	7531856	31 x 4.80	A	03-0613
	5942874	31 x 3.85	A	03-0101	7531858	31 x 4.85	A	03-0614
	5942875	31 x 3.90	A	03-0102	7531860	31 x 4.90	A	03-0615
	5942876	31 x 3.95	A	03-0103		31 x 4.95	A	03-0616

SHIM KIT	68 PIECE KIT	3.00-4.65		03-1075	34 x 2 per size			
	136 PIECE KIT	3.00-4.65		03-1076	34 x 4 per size			

POPULAR APPLICATIONS	OE NUMBER	DIMENSIONS	MAT	PART No.	OE NUMBER	DIMENSIONS	MAT	PART No.
FIAT-LANCIA		13.42 x 1.50	AN	03-0364	9150750680	13.42 x 2.70	AN	03-0297
Ulysse 2.0ie Scudo		13.42 x 1.55	AN	03-0973	9150750880	13.42 x 2.75	AN	03-0903
1.9D, TD Ducato 94 2.0		13.42 x 1.60	AN	03-0365	9150751080	13.42 x 2.80	AN	03-0298
Ducato 02 2.0 Mpi	9456082080	13.42 x 1.65	AN	03-0974	9150751280	13.42 x 2.85	AN	03-0904
Z 2.0 ie	9456082380	13.42 x 1.70	AN	03-0366	9150751480	13.42 x 2.90	AN	03-0299
		13.42 x 1.75	AN	03-0893	9150751680	13.42 x 2.95	AN	03-0905
	9456082680	13.42 x 1.80	AN	03-0367	9150751880	13.42 x 3.00	AN	03-0300
		13.42 x 1.85	AN	03-0894	9153599780	13.42 x 3.05	AN	03-0906
	9456083080	13.42 x 1.90	AN	03-0289	9150992280	13.42 x 3.10	AN	03-0301
	9456083380	13.42 x 1.95	AN	03-0895	9153600080	13.42 x 3.15	AN	03-0907
		13.42 x 2.00	AN	03-0290	9153600180	13.42 x 3.20	AN	03-0302
	9456083680	13.42 x 2.05	AN	03-0896	9150992480	13.42 x 3.25	AN	03-0975
	9456083980	13.42 x 2.10	AN	03-0291	9153600480	13.42 x 3.30	AN	03-0908
		13.42 x 2.15	AN	03-0897	9153600580	13.42 x 3.35	AN	03-0909
	9150748780	13.42 x 2.20	AN	03-0292	9150992680	13.42 x 3.40	AN	03-0976
	9150748880	13.42 x 2.25	AN	03-0898	9153600880	13.42 x 3.45	AN	03-0910
	9150749080	13.42 x 2.30	AN	03-0293	9153600980	13.42 x 3.50	AN	03-0977
	9150749280	13.42 x 2.35	AN	03-0899	9150992880	13.42 x 3.55	AN	03-0911
	9150749480	13.42 x 2.40	AN	03-0294	9456084380	13.42 x 3.60	AN	03-0978
	9150749680	13.42 x 2.45	AN	03-0900	9456084680	13.42 x 3.70	AN	03-0979
	9150749880	13.42 x 2.50	AN	03-0295	9456084980	13.42 x 3.75	AN	03-0980
	9150750080	13.42 x 2.55	AN	03-0901	9456085280	13.42 x 3.85	AN	03-0981
	9150750280	13.42 x 2.60	AN	03-0296	9456085580	13.42 x 3.90	AN	03-0982
	9150750480	13.42 x 2.65	AN	03-0902	9456085880	13.42 x 4.00	AN	03-0983

SHIM KIT	90 PIECE KIT	1.50-3.20		03-1069	18 x 5 per size in .10mm increments			
	180 PIECE KIT	1.50-3.20		03-1070	18 x 10 per size in .10mm increments			

FIAT IVECO DIESEL		40 x 2.50	A	03-0571	4713222	40 x 3.75	A	03-0242
131 Diesel 132 Diesel		40 x 2.55	A	03-0572	4713224	40 x 3.80	A	03-0244
242 Diesel Argenta Diesel		40 x 2.60	A	03-0573	4713226	40 x 3.85	A	03-0246
Croma Diesel Ducato Diesel		40 x 2.65	A	03-0617	4713228	40 x 3.90	A	03-0248
82-90 Daily I 30.8, 35.8, 40.8 TD		40 x 2.70	A	03-0574	4713230	40 x 3.95	A	03-0250
		40 x 2.75	A	03-0575	4713209	40 x 4.00	A	03-0252
LANCIA DIESEL		40 x 2.80	A	03-0576	4713233	40 x 4.05	A	03-0254
Thema D, TD 78-89		40 x 2.85	A	03-0577	4713235	40 x 4.10	A	03-0256
		40 x 2.90	A	03-0578	4713237	40 x 4.15	A	03-0258
		40 x 2.95	A	03-0579	4713239	40 x 4.20	A	03-0260
		40 x 3.00	A	03-0359	4713241	40 x 4.25	A	03-0262
		40 x 3.05	A	03-0360	4713243	40 x 4.30	A	03-0264
		40 x 3.10	A	03-0361	4713245	40 x 4.35	A	03-0266
		40 x 3.15	A	03-0362	4713247	40 x 4.40	A	03-0268
		40 x 3.20	A	03-0363	4713249	40 x 4.45	A	03-0270
	4713210	40 x 3.25	A	03-0230	4713251	40 x 4.50	A	03-0272
	4713211	40 x 3.30	A	03-0231	4713253	40 x 4.55	A	03-0274
	4713212	40 x 3.35	A	03-0232	4713255	40 x 4.60	A	03-0276
	4713213	40 x 3.40	A	03-0233	4713257	40 x 4.65	A	03-0278
	4713214	40 x 3.45	A	03-0234	4713259	40 x 4.70	A	03-0280
	4713215	40 x 3.50	A	03-0235	4713261	40 x 4.75	A	03-0282
	4713216	40 x 3.55	A	03-0236	4713263	40 x 4.80	A	03-0284
	4713217	40 x 3.60	A	03-0237	4713265	40 x 4.85	A	03-0286
	4713218	40 x 3.65	A	03-0238	4713267	40 x 4.90	A	03-0288
	4713220	40 x 3.70	A	03-0240				

SHIM KIT	48 PIECE KIT	3.25-4.40		03-1043	24 x 2 per size			
	96 PIECE KIT	3.25-4.40		03-1044	24 x 4 per size			
	48 PIECE KIT	3.75-4.90		03-1046	24 x 2 per size			

POPULAR APPLICATIONS	OE NUMBER	DIMENSIONS	MAT	PART No.	OE NUMBER	DIMENSIONS	MAT	PART No.
FORD	84FM6K514AAA	31 x 3.00	A	03-0199	84FM6K514BEA	31 x 4.00	A	03-0104
Fiesta	84FM6K514ABA	31 x 3.05	A	03-0200	84FM6K514BFA	31 x 4.05	A	03-0105
Escort	84FM6K514ACA	31 x 3.10	A	03-0201	84FM6K514BGA	31 x 4.10	A	03-0106
Sierra	84FM6K514ADA	31 x 3.15	A	03-0202	84FM6K514BHA	31 x 4.15	A	03-0107
Mot. Diesel 1.6 & 1.8	84FM6K514AEA	31 x 3.20	A	03-0203	84FM6K514BJA	31 x 4.20	A	03-0108
NA & Turbo	84FM6K514AFA	31 x 3.25	A	03-0204	84FM6K514BKA	31 x 4.25	A	03-0109
	84FM6K514AGA	31 x 3.30	A	03-0090	84FM6K514BLA	31 x 4.30	A	03-0310
	84FM6K514AHA	31 x 3.35	A	03-0091	84FM6K514BMA	31 x 4.35	A	03-0368
	84FM6K514AJA	31 x 3.40	A	03-0092	84FM6K514BNA	31 x 4.40	A	03-0369
	84FM6K514AKA	31 x 3.45	A	03-0093	84FM6K514BRA	31 x 4.45	A	03-0370
	84FM6K514ALA	31 x 3.50	A	03-0094	84FM6K514BSA	31 x 4.50	A	03-0371
	84FM6K514AMA	31 x 3.55	A	03-0095	84FM6K514BTA	31 x 4.55	A	03-0372
	84FM6K514ANA	31 x 3.60	A	03-0096	84FM6K514CAA	31 x 4.60	A	03-0373
	84FM6K514ARA	31 x 3.65	A	03-0097	84FM6K514CBA	31 x 4.65	A	03-0374
	84FM6K514ASA	31 x 3.70	A	03-0098	84FM6K514CCA	31 x 4.70	A	03-0611
	84FM6K514ATA	31 x 3.75	A	03-0099	84FM6K514CDA	31 x 4.75	A	03-0612
	84FM6K514BAA	31 x 3.80	A	03-0100		31 x 4.80	A	03-0613
	84FM6K514BBA	31 x 3.85	A	03-0101		31 x 4.85	A	03-0614
	84FM6K514BCA	31 x 3.90	A	03-0102		31 x 4.90	A	03-0615
	84FM6K514BDA	31 x 3.95	A	03-0103		31 x 4.95	A	03-0616

SHIM KIT	68 PIECE KIT	3.00-4.65		03-1075	34 x 2 per size			
	136 PIECE KIT	3.00-4.65		03-1076	34 x 4 per size			

FORD	030 0330	27.5 x 1.80	A	03-275180	105 4070	27.5 x 2.60	A	03-275260
Mondeo 5/98-	105 4059	27.5 x 1.85	A	03-275185	105 4071	27.5 x 2.65	A	03-275265
Cougar 5/98-	105 4060	27.5 x 1.90	A	03-275190	105 4072	27.5 x 2.70	A	03-275270
Focus 8/98-	105 4061	27.5 x 1.95	A	03-275195	105 4073	27.5 x 2.75	A	03-275275
Zetec E, SE,1.6/ 1.8/ 2.0 16v	105 4062	27.5 x 2.00	A	03-275200	105 4074	27.5 x 2.80	A	03-275280
	105 4063	27.5 x 2.05	A	03-275205	105 4085	27.5 x 2.85	A	03-275285
	105 4064	27.5 x 2.10	A	03-275210	105 4075	27.5 x 2.90	A	03-275290
	105 4065	27.5 x 2.15	A	03-275215	105 4076	27.5 x 2.95	A	03-275295
	105 4066	27.5 x 2.20	A	03-275220	105 4077	27.5 x 3.00	A	03-275300
	105 4067	27.5 x 2.25	A	03-275225	105 4086	27.5 x 3.05	A	03-275305
	105 4083	27.5 x 2.30	A	03-275230	105 4078	27.5 x 3.10	A	03-275310
	105 4087	27.5 x 2.35	A	03-275235	105 4079	27.5 x 3.15	A	03-275315
	105 4084	27.5 x 2.40	A	03-275240	105 4080	27.5 x 3.20	A	03-275320
	105 4088	27.5 x 2.45	A	03-275245	105 4081	27.5 x 3.25	A	03-275325
	105 4068	27.5 x 2.50	A	03-275250	105 4082	27.5 x 3.30	A	03-275330
	105 4069	27.5 x 2.55	A	03-275255				

SHIM KIT	62 PIECE KIT	1.80-3.30		03-1105	31 x 2 per size			
	124 PIECE KIT	1.80-3.30		03-1106	31 x 4 per size			

FORD	1029214	13.8 x 2.50	AS	03-3-138250	1031053	13.8 x 3.00	AS	03-3-138300
Puma 1.7 SFI	1031035	13.8 x 2.55	AS	03-3-138255	1031054	13.8 x 3.05	AS	03-3-138305
16v Mot. Zetec S	1031036	13.8 x 2.60	AS	03-3-138260	1031055	13.8 x 3.10	AS	03-3-138310
1679 cc. (92 kW)	1031039	13.8 x 2.65	AS	03-3-138265	1031056	13.8 x 3.15	AS	03-3-138315
97-	1031042	13.8 x 2.70	AS	03-3-138270	1031057	13.8 x 3.20	AS	03-3-138320
	1031044	13.8 x 2.75	AS	03-3-138275	1031058	13.8 x 3.25	AS	03-3-138325
	1031047	13.8 x 2.80	AS	03-3-138280	1031059	13.8 x 3.30	AS	03-3-138330
	1031049	13.8 x 2.85	AS	03-3-138285	1031060	13.8 x 3.35	AS	03-3-138335
	1031050	13.8 x 2.90	AS	03-3-138290	1031061	13.8 x 3.40	AS	03-3-138340
	1031052	13.8 x 2.95	AS	03-3-138295				

SHIM KIT	38 PIECE KIT	2.50-3.40		03-1103	19 x 2 per size			
	76 PIECE KIT	2.50-3.40		03-1104	19 x 4 per size			

POPULAR APPLICATIONS	OE NUMBER	DIMENSIONS	MAT	PART No.	OE NUMBER	DIMENSIONS	MAT	PART No.
FORD	1 004 306	25 x 2.00	AS	03-25200	1 004 356	25 x 2.80	AS	03-0344
Fiesta IV	1 004 308	25 x 2.05	AS	03-25205	1 004 359	25 x 2.85	AS	03-0345
Eng. Zetec SE 1.2i 16v (55 kW)	1 004 310	25 x 2.10	AS	03-25210	1 004 363	25 x 2.90	AS	03-0346
Fiesta IV / Puma/ Focus	1 004 314	25 x 2.15	AS	03-25215	1 004 367	25 x 2.95	AS	03-0347
Eng. Zetec SE 1.4i 16v (66kW	1 004 317	25 x 2.20	AS	03-25220	1 009 973	25 x 3.00	AS	03-0348
	1 004 321	25 x 2.25	AS	03-25225	1 004 388	25 x 3.05	AS	03-0349
	1 004 327	25 x 2.30	AS	03-0334	1 009 974	25 x 3.10	AS	03-0350
	1 004 332	25 x 2.35	AS	03-0335	1 004 392	25 x 3.15	AS	03-0351
	1 004 335	25 x 2.40	AS	03-0336	1 004 394	25 x 3.20	AS	03-0352
	1 004 340	25 x 2.45	AS	03-0337	1 004 396	25 x 3.25	AS	03-0353
	1 004 343	25 x 2.50	AS	03-0338	1 004 399	25 x 3.30	AS	03-0354
	1 004 345	25 x 2.55	AS	03-0339		25 x 3.35	AS	03-0355
	1 004 347	25 x 2.60	AS	03-0340		25 x 3.40	AS	03-0356
	1 004 349	25 x 2.65	AS	03-0341		25 x 3.45	AS	03-0357
	1 004 351	25 x 2.70	AS	03-0342		25 x 3.50	AS	03-0358
	1 004 353	25 x 2.75	AS	03-0343				

SHIM KIT	54 PIECE KIT	2.00-3.30		03-1107	27 x 2 per size			
	108 PIECE KIT	2.00-3.30		03-1108	27 x 4 per size			
	POPULAR SIZES KIT	2.30-3.05		03-1107A	16 x 2 per size			

ISUZU	13229-3C900	32 x 2.20	A	03-32220	13229-3C910 / 8971492770	32 x 2.70	A	03-32270
6VD1 Trooper 91-	13229-3C901	32 x 2.25	A	03-32225	13229-3C911	32 x 2.75	A	03-32275
HONDA	13229-3C902	32 x 2.30	A	03-32230	13229-3C912 / 8971492820	32 x 2.80	A	03-32280
6VD1 Passport 94-	13229-3C903	32 x 2.35	A	03-32235	13229-3C913	32 x 2.85	A	03-32285
OPEL	13229-3C904	32 x 2.40	A	03-32240	13229-3C914 / 8971492570	32 x 2.90	A	03-32290
6VD1 Monterey A	13229-3C905	32 x 2.45	A	03-32245		32 x 2.95	A	03-32295
92-98 3.2 24v	13229-3C906	32 x 2.50	A	03-32250	8971492920	32 x 3.00	A	03-32300
NISSAN	13229-3C907	32 x 2.55	A	03-32255		32 x 3.05	A	03-32305
RD28Ti Patrol	13229-3C908 / 8971492720	32 x 2.60	A	03-32260				
GR II 97-00 2.8TDi	13229-3C909	32 x 2.65	A	03-32265				

SHIM KIT	72 PIECE KIT	2.20-3.05		03-1113	18 x 4 per size			

ISUZU		31.5 x 2.35	A	03-0789		31.5 x 3.10	A	03-0582
Gemini 1.5D		31.5 x 2.40	A	03-0790		31.5 x 3.15	A	03-0583
Isuzu 15D 4EC1		31.5 x 2.45	A	03-0791		31.5 x 3.20	A	03-0584
OPEL		31.5 x 2.50	A	03-0792		31.5 x 3.25	A	03-0585
Corsa A, B 1.5D/1.7D/TD		31.5 x 2.55	A	03-0793		31.5 x 3.30	A	03-0586
4EC1/4EE1/4EE1T		31.5 x 2.60	A	03-0794		31.5 x 3.35	A	03-0587
		31.5 x 2.65	A	03-0795		31.5 x 3.40	A	03-0588
		31.5 x 2.70	A	03-0796		31.5 x 3.45	A	03-0589
		31.5 x 2.75	A	03-0797		31.5 x 3.50	A	03-0590
		31.5 x 2.80	A	03-0798		31.5 x 3.55	A	03-0591
		31.5 x 2.85	A	03-0799		31.5 x 3.60	A	03-0592
		31.5 x 2.90	A	03-0800		31.5 x 3.65	A	03-0593
		31.5 x 2.95	A	03-0801		31.5 x 3.70	A	03-0594
		31.5 x 3.00	A	03-0580		31.5 x 3.75	A	03-0595
		31.5 x 3.05	A	03-0581				

SHIM KIT	116 PIECE KIT	2.35-3.75		03-1090	29 x 4 per size			

KIA		31.15 x 3.75	A	03-311375				
Sportage 2.0TD 4WD 10/97		31.15 x 3.80	A	03-311380				
MAZDA		31.15 x 3.85	A	03-311385				
626 IV 2.0D 10/92-4/97		31.15 x 3.90	A	03-311390				
SUZUKI		31.15 x 3.95	A	03-311395				
GrandVitara 2.0TD3/98	RF03-12-979A	31.15 x 4.00	A	03-311400				
Vitara 2.0TD 12/94-3/98	RF03-12-977A	31.15 x 4.05	A	03-311405				
Mot. RF 1998cc		31.15 x 4.10	A	03-311410				
		31.15 x 4.15	A	03-311415				
		31.15 x 4.20	A	03-311420				
		31.15 x 4.25	A	03-311425				
		31.15 x 4.30	A	03-311430				

SHIM KIT	48 PIECE KIT	3.75-4.30		03-1035	12 x 4 per size			

POPULAR APPLICATIONS	OE NUMBER	DIMENSIONS	MAT	PART No.	OE NUMBER	DIMENSIONS	MAT	PART No.
KIA DIESEL		32.35 x 3.40	A	03-323340		32.35 x 4.05	A	03-323405
R2 2.2D 96-		32.35 x 3.45	A	03-323345		32.35 x 4.10	A	03-323410
MAZDA		32.35 x 3.50	A	03-323350		32.35 x 4.15	A	03-323415
E2000 R2 2.2D 97-		32.35 x 3.55	A	03-323355		32.35 x 4.20	A	03-323420
		32.35 x 3.60	A	03-323360		32.35 x 4.25	A	03-323425
		32.35 x 3.65	A	03-323365		32.35 x 4.30	A	03-323430
		32.35 x 3.70	A	03-323370		32.35 x 4.35	A	03-323435
		32.35 x 3.75	A	03-323375		32.35 x 4.40	A	03-323440
		32.35 x 3.80	A	03-323380		32.35 x 4.45	A	03-323445
		32.35 x 3.85	A	03-323385		32.35 x 4.50	A	03-323450
		32.35 x 3.90	A	03-323390		32.35 x 4.55	A	03-323455
		32.35 x 3.95	A	03-323395		32.35 x 4.60	A	03-323460
		32.35 x 4.00	A	03-323400				

SHIM KIT	100 PIECE KIT	3.40-4.60		03-1020	25 x 4 per size			

NISSAN	13229-53C00	27 x 2.00	A	03-27200	13229-53Y20	27 x 2.55	A	03-27255
Micra (K11) 1.0i 16V 92-	13229-53C02	27 x 2.05	A	03-27205	13229-53Y23	27 x 2.60	A	03-27260
CG10GE	13229-53C05	27 x 2.10	A	03-27210	13229-53Y60	27 x 2.65	A	03-27265
Micra 1.3 16V 92-	13229-53Y00	27 x 2.15	A	03-27215	13229-53Y63	27 x 2.70	A	03-27270
CG13GE	13229-53Y03	27 x 2.20	A	03-27220	13229-53Y65	27 x 2.75	A	03-27275
Primera 1.6 16V 92-	13229-53Y05	27 x 2.25	A	03-27225	13229-53Y68	27 x 2.80	A	03-27280
GA16DS, DE	13229-53Y08	27 x 2.30	A	03-27230	13229-53Y70	27 x 2.85	A	03-27285
	13229-53Y10	27 x 2.35	A	03-27235	13229-53Y73	27 x 2.90	A	03-27290
	13229-53Y13	27 x 2.40	A	03-27240	13229-53Y75	27 x 2.95	A	03-27295
	13229-53Y15	27 x 2.45	A	03-27245	13229-53Y78	27 x 3.00	A	03-27300
	13229-53Y18	27 x 2.50	A	03-27250				

SHIM KIT	84 PIECE KIT	2.00-3.00		03-1101	21 x 4 per size			

OPEL DIESEL		28 x 2.50	A	03-28250		28 x 2.95	A	03-28295
Astra F / Vectra A, B		28 x 2.55	A	03-28255		28 x 3.00	A	03-28300
Isuzu Y17DT 1.7TD 16v		28 x 2.60	A	03-28260		28 x 3.05	A	03-28305
		28 x 2.65	A	03-28265		28 x 3.10	A	03-28310
	641 679	28 x 2.70	A	03-28270		28 x 3.15	A	03-28315
		28 x 2.75	A	03-28275		28 x 3.20	A	03-28320
		28 x 2.80	A	03-28280		28 x 3.25	A	03-28325
		28 x 2.85	A	03-28285		28 x 3.30	A	03-28330
		28 x 2.90	A	03-28290				

SHIM KIT	68 PIECE KIT	2.50-3.30		03-1100	17 x 4 per size			

PEUGEOT		13.42 x 1.50	AN	03-0364		13.42 x 2.70	AN	03-0297
204 Diesel		13.42 x 1.55	AN	03-0973	90627	13.42 x 2.75	AN	03-0903
205 Diesel	90638	13.42 x 1.60	AN	03-0365	90628	13.42 x 2.80	AN	03-0298
304 Diesel		13.42 x 1.65	AN	03-0974		13.42 x 2.85	AN	03-0904
305 Diesel	90639	13.42 x 1.70	AN	03-0366	90629	13.42 x 2.90	AN	03-0299
	90640	13.42 x 1.75	AN	03-0893	90630	13.42 x 2.95	AN	03-0905
		13.42 x 1.80	AN	03-0367		13.42 x 3.00	AN	03-0300
	90641	13.42 x 1.85	AN	03-0894	90631	13.42 x 3.05	AN	03-0906
		13.42 x 1.90	AN	03-0289		13.42 x 3.10	AN	03-0301
	90642	13.42 x 1.95	AN	03-0895	90632	13.42 x 3.15	AN	03-0907
	90620	13.42 x 2.00	AN	03-0290	90633	13.42 x 3.20	AN	03-0302
		13.42 x 2.05	AN	03-0896		13.42 x 3.25	AN	03-0975
	96021	13.42 x 2.10	AN	03-0291	90634	13.42 x 3.30	AN	03-0908
	90644	13.42 x 2.15	AN	03-0897	90635	13.42 x 3.35	AN	03-0909
		13.42 x 2.20	AN	03-0292		13.42 x 3.40	AN	03-0976
	90622	13.42 x 2.25	AN	03-0898	90636	13.42 x 3.45	AN	03-0910
		13.42 x 2.30	AN	03-0293		13.42 x 3.50	AN	03-0977
	90607	13.42 x 2.35	AN	03-0899	90637	13.42 x 3.55	AN	03-0911
	90609	13.42 x 2.40	AN	03-0294		13.42 x 3.60	AN	03-0978
		13.42 x 2.45	AN	03-0900		13.42 x 3.70	AN	03-0979
	90624	13.42 x 2.50	AN	03-0295		13.42 x 3.75	AN	03-0980
	90625	13.42 x 2.55	AN	03-0901		13.42 x 3.85	AN	03-0981
		13.42 x 2.60	AN	03-0296		13.42 x 3.90	AN	03-0982
	90626	13.42 x 2.65	AN	03-0902		13.42 x 4.00	AN	03-0983

SHIM KIT	90 PIECE KIT	1.50-3.20		03-1069	18 x 5 per size in .10mm increments			
	180 PIECE KIT	1.50-3.20		03-1070	18 x 10 per size in .10mm increments			

POPULAR APPLICATIONS	OE NUMBER	DIMENSIONS	MAT	PART No.	OE NUMBER	DIMENSIONS	MAT	PART No.
PEUGEOT		13.42 x 1.50	AN	03-0364	9150750680	13.42 x 2.70	AN	03-0297
2.0ie Mot. RFU		13.42 x 1.55	AN	03-0973	9150750880	13.42 x 2.75	AN	03-0903
		13.42 x 1.60	AN	03-0365	9150751080	13.42 x 2.80	AN	03-0298
	9456082080	13.42 x 1.65	AN	03-0974	9150751280	13.42 x 2.85	AN	03-0904
	9456082380	13.42 x 1.70	AN	03-0366	9150751480	13.42 x 2.90	AN	03-0299
		13.42 x 1.75	AN	03-0893	9150751680	13.42 x 2.95	AN	03-0905
	9456082680	13.42 x 1.80	AN	03-0367	9150751880	13.42 x 3.00	AN	03-0300
		13.42 x 1.85	AN	03-0894	9153599780	13.42 x 3.05	AN	03-0906
	9456083080	13.42 x 1.90	AN	03-0289	9150992280	13.42 x 3.10	AN	03-0301
	9456083380	13.42 x 1.95	AN	03-0895	9153600080	13.42 x 3.15	AN	03-0907
		13.42 x 2.00	AN	03-0290	9153600180	13.42 x 3.20	AN	03-0302
	9456083680	13.42 x 2.05	AN	03-0896	9150992480	13.42 x 3.25	AN	03-0975
	9456083980	13.42 x 2.10	AN	03-0291	9153600480	13.42 x 3.30	AN	03-0908
		13.42 x 2.15	AN	03-0897	9153600580	13.42 x 3.35	AN	03-0909
	9150748780	13.42 x 2.20	AN	03-0292	9150992680	13.42 x 3.40	AN	03-0976
	9150748880	13.42 x 2.25	AN	03-0898	9153600880	13.42 x 3.45	AN	03-0910
	9150749080	13.42 x 2.30	AN	03-0293	9153600980	13.42 x 3.50	AN	03-0977
	9150749280	13.42 x 2.35	AN	03-0899	9150992880	13.42 x 3.55	AN	03-0911
	9150749480	13.42 x 2.40	AN	03-0294	9456084380	13.42 x 3.60	AN	03-0978
	9150749680	13.42 x 2.45	AN	03-0900	9456084680	13.42 x 3.70	AN	03-0979
	9150749880	13.42 x 2.50	AN	03-0295	9456084980	13.42 x 3.75	AN	03-0980
	9150750080	13.42 x 2.55	AN	03-0901	9456085280	13.42 x 3.85	AN	03-0981
	9150750280	13.42 x 2.60	AN	03-0296	9456085580	13.42 x 3.90	AN	03-0982
	9150750480	13.42 x 2.65	AN	03-0902	9456085880	13.42 x 4.00	AN	03-0983

SHIM KIT	90 PIECE KIT	1.50-3.20		03-1069	18 x 5 per size in .10mm increments			
	180 PIECE KIT	1.50-3.20		03-1070	18 x 10 per size in .10mm increments			

RENAULT		31.5 x 3.00	A	03-0580	2077722526	31.5 x 3.80	A	03-0596
R9 / R11/ Rapid/ Super5		31.5 x 3.05	A	03-0581	2077722528	31.5 x 3.85	A	03-0597
F8M700/720/730		31.5 x 3.10	A	03-0582	2077722530	31.5 x 3.90	A	03-0598
1.6D		31.5 x 3.15	A	03-0583	2077722532	31.5 x 3.95	A	03-0599
		31.5 x 3.20	A	03-0584	2077722534	31.5 x 4.00	A	03-0600
	2077722504	31.5 x 3.25	A	03-0585	2077722536	31.5 x 4.05	A	03-0601
	2077722506	31.5 x 3.30	A	03-0586	2077722538	31.5 x 4.10	A	03-0602
	2077722508	31.5 x 3.35	A	03-0587	2077722540	31.5 x 4.15	A	03-0603
	2077722510	31.5 x 3.40	A	03-0588	2077722542	31.5 x 4.20	A	03-0604
	2077722512	31.5 x 3.45	A	03-0589	2077722544	31.5 x 4.25	A	03-0605
	2077722514	31.5 x 3.50	A	03-0590	2077722546	31.5 x 4.30	A	03-0606
	2077722516	31.5 x 3.55	A	03-0591		31.5 x 4.35	A	03-0607
	2077722518	31.5 x 3.60	A	03-0592	2077722550	31.5 x 4.40	A	03-0608
	2077722520	31.5 x 3.65	A	03-0593		31.5 x 4.45	A	03-0609
	2077722522	31.5 x 3.70	A	03-0594	2077722554	31.5 x 4.50	A	03-0610
	2077722524	31.5 x 3.75	A	03-0595				

SHIM KIT	104 PIECE KIT	3.25-4.50		03-1081	26 x 4 per size			

RENAULT		34.6 x 2.60	A	03-346260	77.00.101.532	34.6 x 3.30	A	03-346330
Clio I-II (90-97) -Laguna I 1.8l		34.6 x 2.65	A	03-346265	77.00.101.534	34.6 x 3.35	A	03-346335
F3P		34.6 x 2.70	A	03-346270	77.00.101.536	34.6 x 3.40	A	03-346340
Megane - Laguna I -Espace III		34.6 x 2.75	A	03-346275	77.00.101.538	34.6 x 3.45	A	03-346345
2.0l F3R		34.6 x 2.80	A	03-346280	77.00.101.540	34.6 x 3.50	A	03-346350
Express 1.6D		34.6 x 2.85	A	03-346285	77.00.101.542	34.6 x 3.55	A	03-346355
F8M	77.00.101.516	34.6 x 2.90	A	03-346290	77.00.101.544	34.6 x 3.60	A	03-346360
Clio/ Megane/ Laguna	77.00.101.518	34.6 x 2.95	A	03-346295	77.00.101.546	34.6 x 3.65	A	03-346365
Kangoo 1.9D	77.00.101.520	34.6 x 3.00	A	03-346300	77.00.101.548	34.6 x 3.70	A	03-346370
F8Q -97	77.00.101.522	34.6 x 3.05	A	03-346305		34.6 x 3.75	A	03-346375
	77.00.101.524	34.6 x 3.10	A	03-346310		34.6 x 3.80	A	03-346380
	77.00.101.526	34.6 x 3.15	A	03-346315		34.6 x 3.85	A	03-346385
	77.00.101.528	34.6 x 3.20	A	03-346320		34.6 x 3.90	A	03-346390
	77.00.101.530	34.6 x 3.25	A	03-346325		34.6 x 3.95	A	03-346395

SHIM KIT	68 PIECE KIT	2.90-3.70		03-1102	17 x 4 per size in .05 incre-ments			

POPULAR APPLICATIONS	OE NUMBER	DIMENSIONS	MAT	PART No.	OE NUMBER	DIMENSIONS	MAT	PART No.
ROVER		15.55 x 2.13	AS	03-0318	UKC 1991	15.55 x 3.04	AS	03-0741
1.7/ 2.0 Marina & Ital		15.55 x 2.15	AS	03-0721	UKC 1992	15.55 x 3.07	AS	03-0742
Maestro 1.6 O Series		15.55 x 2.18	AS	03-0319	UKC 1993	15.55 x 3.09	AS	03-0743
Montego 1.6/ 2.0		15.55 x 2.20	AS	03-0722	UKC 1994	15.55 x 3.12	AS	03-0744
216 S, SE 85-88		15.55 x 2.23	AS	03-0320	UKC 1995	15.55 x 3.14	AS	03-0745
SD1 Series 2.0/2.3/ 2.6	148195	15.55 x 2.26	AS	03-0723	UKC 1996	15.55 x 3.17	AS	03-0746
	148196	15.55 x 2.28	AS	03-0321	UKC 1997	15.55 x 3.20	AS	03-0747
	148197	15.55 x 2.31	AS	03-0724	UKC 1998	15.55 x 3.22	AS	03-0748
	148198	15.55 x 2.33	AS	03-0322	UKC 1999	15.55 x 3.25	AS	03-0749
	148199	15.55 x 2.36	AS	03-0725	UKC 2000	15.55 x 3.27	AS	03-0750
	148200	15.55 x 2.38	AS	03-0323	UKC 1712	15.55 x 3.30	AS	03-0751
	148201	15.55 x 2.41	AS	03-0726	UKC 1713	15.55 x 3.32	AS	03-0752
	148202	15.55 x 2.43	AS	03-0324	UKC 1714	15.55 x 3.35	AS	03-0753
	148203	15.55 x 2.46	AS	03-0727	UKC 1715	15.55 x 3.37	AS	03-0754
	148204	15.55 x 2.48	AS	03-0325	UKC 1716	15.55 x 3.40	AS	03-0755
	148205	15.55 x 2.51	AS	03-0728	UKC 1717	15.55 x 3.42	AS	03-0756
	148206	15.55 x 2.54	AS	03-0326	UKC 1718	15.55 x 3.45	AS	03-0757
	148207	15.55 x 2.56	AS	03-0729	UKC 1719	15.55 x 3.47	AS	03-0758
	148208	15.55 x 2.59	AS	03-0327	UKC 1720	15.55 x 3.50	AS	03-0759
	148209	15.55 x 2.61	AS	03-0730	UKC 1721	15.55 x 3.53	AS	03-0760
	148210	15.55 x 2.64	AS	03-0328	UKC 1722	15.55 x 3.55	AS	03-0761
	148211	15.55 x 2.66	AS	03-0731	UKC 1723	15.55 x 3.58	AS	03-0762
	148212	15.55 x 2.69	AS	03-0329	UKC 1724	15.55 x 3.60	AS	03-0763
	148213	15.55 x 2.71	AS	03-0732	UKC 1725	15.55 x 3.63	AS	03-0764
	148214	15.55 x 2.74	AS	03-0330	UKC 1726	15.55 x 3.65	AS	03-0765
	148215	15.55 x 2.76	AS	03-0733	UKC 1727	15.55 x 3.68	AS	03-0766
	148216	15.55 x 2.79	AS	03-0331	UKC 1728	15.55 x 3.70	AS	03-0767
	148217	15.55 x 2.81	AS	03-0734	UKC 1729	15.55 x 3.73	AS	03-0768
	148218	15.55 x 2.84	AS	03-0332	UKC 1730	15.55 x 3.75	AS	03-0769
	148219	15.55 x 2.87	AS	03-0735	UKC 1731	15.55 x 3.78	AS	03-0770
	UKC 1985	15.55 x 2.89	AS	03-0333	UKC 1732	15.55 x 3.81	AS	03-0771
	UKC 1986	15.55 x 2.92	AS	03-0736	UKC 1733	15.55 x 3.83	AS	03-0772
	UKC 1987	15.55 x 2.94	AS	03-0737	UKC 1734	15.55 x 3.86	AS	03-0773
	UKC 1988	15.55 x 2.97	AS	03-0738		15.55 x 3.88	AS	03-0774
	UKC 1989	15.55 x 2.99	AS	03-0739		15.55 x 3.91	AS	03-0775
	UKC 1990	15.55 x 3.02	AS	03-0740				

SHIM KIT	136 PIECE KIT	2.20-3.04		03-1087	34 x 4 per size			
	136 PIECE KIT	3.07-3.91		03-1088	34 x 4 per size			

SAAB	8308215	15.55 x 1.77	AS	03-0311	8349201	15.55 x 2.36	AS	03-0725
99 2.0 8v		15.55 x 1.80	AS	03-0714		15.55 x 2.38	AS	03-0323
900 2.0 8v	8308223	15.55 x 1.82	AS	03-0312	3449227	15.55 x 2.41	AS	03-0726
900 Turbo		15.55 x 1.85	AS	03-0715	8349243	15.55 x 2.43	AS	03-0324
	8308231	15.55 x 1.87	AS	03-0313		15.55 x 2.46	AS	03-0727
		15.55 x 1.90	AS	03-0716	8349268	15.55 x 2.48	AS	03-0325
	8308249	15.55 x 1.93	AS	03-0314		15.55 x 2.51	AS	03-0728
		15.55 x 1.95	AS	03-0717	8349284	15.55 x 2.54	AS	03-0326
	8308256	15.55 x 1.98	AS	03-0315	8349300	15.55 x 2.56	AS	03-0729
		15.55 x 2.00	AS	03-0718	8349326	15.55 x 2.59	AS	03-0327
	8308264	15.55 x 2.03	AS	03-0316		15.55 x 2.61	AS	03-0730
		15.55 x 2.05	AS	03-0719	8349342	15.55 x 2.64	AS	03-0328
	8308272	15.55 x 2.08	AS	03-0317		15.55 x 2.66	AS	03-0731
		15.55 x 2.10	AS	03-0720	8349367	15.55 x 2.69	AS	03-0329
	8308280	15.55 x 2.13	AS	03-0318	8349383	15.55 x 2.71	AS	03-0732
		15.55 x 2.15	AS	03-0721		15.55 x 2.74	AS	03-0330
	8308298	15.55 x 2.18	AS	03-0319	8355042	15.55 x 2.76	AS	03-0733
		15.55 x 2.20	AS	03-0722		15.55 x 2.79	AS	03-0331
	8308306	15.55 x 2.23	AS	03-0320	8355067	15.55 x 2.81	AS	03-0734
		15.55 x 2.26	AS	03-0723	8355083	15.55 x 2.84	AS	03-0332
	8349169	15.55 x 2.28	AS	03-0321		15.55 x 2.87	AS	03-0735
		15.55 x 2.31	AS	03-0724	8303141	15.55 x 2.89	AS	03-0333
	8349185	15.55 x 2.33	AS	03-0322				

SHIM KIT	46 PIECE KIT	1.77-2.89		03-1055	23 x 2 per size			
	92 PIECE KIT	1.77-2.89		03-1056	23 x 4 per size			

POPULAR APPLICATIONS	OE NUMBER	DIMENSIONS	MAT	PART No.	OE NUMBER	DIMENSIONS	MAT	PART No.
TOYOTA		14 x 2.40	AS	03-0802		14 x 2.90	AS	03-0812
Corolla 1.6. 4A		14 x 2.45	AS	03-0803		14 x 2.95	AS	03-0813
		14 x 2.50	AS	03-0804		14 x 3.00	AS	03-0814
		14 x 2.55	AS	03-0805		14 x 3.05	AS	03-0815
		14 x 2.60	AS	03-0806		14 x 3.10	AS	03-0816
		14 x 2.65	AS	03-0807		14 x 3.15	AS	03-0817
		14 x 2.70	AS	03-0808		14 x 3.20	AS	03-0818
		14 x 2.75	AS	03-0809		14 x 3.25	AS	03-0819
		14 x 2.80	AS	03-0810		14 x 3.30	AS	03-0820
		14 x 2.85	AS	03-0811				
SHIM KIT	76 PIECE KIT	2.40-3.30		03-1091	19 x 4 per size			
TOYOTA	13753-74010	28 x 2.50	A	03-28250	13753-74230	28 x 3.05	A	03-28305
Carina E/ Avensis/ Corolla	13753-74030	28 x 2.55	A	03-28255	13753-74250	28 x 3.10	A	03-28310
E11 97-01	13753-74050	28 x 2.60	A	03-28260	13753-74270	28 x 3.15	A	03-28315
4AFE	13753-74070	28 x 2.65	A	03-28265	13753-74290	28 x 3.20	A	03-28320
1.6 16v Celica T20/Carina E	13753-74090	28 x 2.70	A	03-28270	13753-74310	28 x 3.25	A	03-28325
1.8 16v 7AFE	13753-74110	28 x 2.75	A	03-28275	13753-74330	28 x 3.30	A	03-28330
Carina E/ Avensis	13753-74130	28 x 2.80	A	03-28280				
3SFE 2.0	13753-74150	28 x 2.85	A	03-28285				
LandCruiser/4Runner	13753-74170	28 x 2.90	A	03-28290				
5VZFE 3.4 24V	13753-74190	28 x 2.95	A	03-28295				
	13753-74210	28 x 3.00	A	03-28300				
SHIM KIT	68 PIECE KIT	2.50-3.30		03-1100	17 x 4 per size			
TOYOTA	13753-66020	30.5 x 2.50	A	03-305250	13753-66200	30.5 x 2.95	A	03-305295
Landcruiser 80	13753-66040	30.5 x 2.55	A	03-305255	13753-66220	30.5 x 3.00	A	03-305300
4.5 24v Mod. FZJ80	13753-66060	30.5 x 2.60	A	03-305260	13753-66240	30.5 x 3.05	A	03-305305
1FZ-FE 8/92-12/97	13753-66080	30.5 x 2.65	A	03-305265	13753-66260	30.5 x 3.10	A	03-305310
	13753-66100	30.5 x 2.70	A	03-305270	13753-66280	30.5 x 3.15	A	03-305315
	13753-66120	30.5 x 2.75	A	03-305275	13753-66300	30.5 x 3.20	A	03-305320
	13753-66140	30.5 x 2.80	A	03-305280	13753-66320	30.5 x 3.25	A	03-305325
	13753-66160	30.5 x 2.85	A	03-305285	13753-66340	30.5 x 3.30	A	03-305330
	13753-66180	30.5 x 2.90	A	03-305290				
SHIM KIT	68 PIECE KIT	2.50-3.30		03-1110	17 x 4 per size			
TOYOTA	13753-16020	25 x 2.50	A	03-25250	13753-16200	25 x 2.95	A	03-25295
Camry 2.5V6 GXi, SW 88-91	13753-16040	25 x 2.55	A	03-25255	13753-16220	25 x 3.00	A	03-25300
2VZFE	13753-16060	25 x 2.60	A	03-25260	13753-16240	25 x 3.05	A	03-25305
Camry 2.0SV21 86-91 3SFE	13753-16080	25 x 2.65	A	03-25265	13753-16260	25 x 3.10	A	03-25310
Carina II 2.0 GLi,SW 87-92	13753-16100	25 x 2.70	A	03-25270	13753-16280	25 x 3.15	A	03-25315
Carina E 2.0 GLi, SW 92-	13753-16120	25 x 2.75	A	03-25275	13753-16300	25 x 3.20	A	03-25320
Picnic 2.0 16v SXM10 96-	13753-16140	25 x 2.80	A	03-25280	13753-16320	25 x 3.25	A	03-25325
Rav4 2.0 16v	13753-16160	25 x 2.85	A	03-25285	13753-16340	25 x 3.30	A	03-25330
Celica 2.0GT 85-89	13753-16180	25 x 2.90	A	03-25290				
XA 94- 3SGEL								
Corolla, SW, Compact								
1.3 4EFE								
Carina II 1.6 4AF/ 4AFP								
AT171, AE92 87-93								
Camry, SW 2.2 91- 5SFE								
3.0 24v 86-88 7M/ GE								
SHIM KIT	68 PIECE KIT	2.50-3.30		03-1111	17 x 4 per size			
TOYOTA DIESEL		34 x 2.20	A	03-0821		34 x 2.85	A	03-0834
Corolla E7,8,9 83-93		34 x 2.25	A	03-0822		34 x 2.90	A	03-0835
Carina (TA) 82-83		34 x 2.30	A	03-0823		34 x 2.95	A	03-0836
1C 1.8D		34 x 2.35	A	03-0824		34 x 3.00	A	03-0837
2C 2.0D		34 x 2.40	A	03-0825		34 x 3.05	A	03-0838
		34 x 2.45	A	03-0826		34 x 3.10	A	03-0839
		34 x 2.50	A	03-0827		34 x 3.15	A	03-0840
		34 x 2.55	A	03-0828		34 x 3.20	A	03-0841
		34 x 2.60	A	03-0829		34 x 3.25	A	03-0842
		34 x 2.65	A	03-0830		34 x 3.30	A	03-0843
		34 x 2.70	A	03-0831		34 x 3.35	A	03-0844
		34 x 2.75	A	03-0832		34 x 3.40	A	03-0845
		34 x 2.80	A	03-0833				
SHIM KIT	100 PIECE KIT	2.20-3.40		03-1092	25 x 4 per size			

POPULAR APPLICATIONS	OE NUMBER	DIMENSIONS	MAT	PART No.	OE NUMBER	DIMENSIONS	MAT	PART No.
TOYOTA	13753-54010	37 x 2.50	A	03-37250	13753-54260	37 x 3.00	A	03-37300
Landcruiser 90-95	13753-54420	37 x 2.55	A	03-37255	13753-54470	37 x 3.05	A	03-37305
Hilux 90-95 HiAce III 90-95	13753-54060	37 x 2.60	A	03-37260	13753-54310	37 x 3.10	A	03-37310
2L-T 2.4D-TD	13753-54430	37 x 2.65	A	03-37265	13753-54480	37 x 3.15	A	03-37315
MITSUBISHI	13753-54110	37 x 2.70	A	03-37270	13753-54320	37 x 3.20	A	03-37320
Pajero 2.8 TD 94-00	13753-54440	37 x 2.75	A	03-37275	13753-54490	37 x 3.25	A	03-37325
4M40 / 4M40T	13753-54160	37 x 2.80	A	03-37280	13753-54410	37 x 3.30	A	03-37330
	13753-54450	37 x 2.85	A	03-37285				
	13753-54210	37 x 2.90	A	03-37290				
	13753-54460	37 x 2.95	A	03-37295				

SHIM KIT	68 PIECE KIT	2.50-3.30		03-1109	17 x 4 per size			

VOLKSWAGEN		31 x 2.65	A	03-0303	056.109.568	31 x 3.65	A	03-0097
Passat Golf I Golf Diesel		31 x 2.70	A	03-0304	056.109.569	31 x 3.70	A	03-0098
Scirocco Polo AUDI 50/ 100		31 x 2.75	A	03-0305	056.109.570	31 x 3.75	A	03-0099
		31 x 2.80	A	03-0306	056.109.571	31 x 3.80	A	03-0100
		31 x 2.85	A	03-0307	056.109.572	31 x 3.85	A	03-0101
		31 x 2.90	A	03-0308	056.109.573	31 x 3.90	A	03-0102
		31 x 2.95	A	03-0309	056.109.574	31 x 3.95	A	03-0103
	056.109.555	31 x 3.00	A	03-0199	056.109.575	31 x 4.00	A	03-0104
	056.109.556	31 x 3.05	A	03-0200	056.109.576	31 x 4.05	A	03-0105
	056.109.557	31 x 3.10	A	03-0201	056.109.577	31 x 4.10	A	03-0106
	056.109.558	31 x 3.15	A	03-0202	056.109.578	31 x 4.15	A	03-0107
	056.109.559	31 x 3.20	A	03-0203	056.109.579	31 x 4.20	A	03-0108
	056.109.560	31 x 3.25	A	03-0204	056.109.580	31 x 4.25	A	03-0109
	056.109.561	31 x 3.30	A	03-0090		31 x 4.30	A	03-0310
	056.109.562	31 x 3.35	A	03-0091		31 x 4.35	A	03-0368
	056.109.563	31 x 3.40	A	03-0092		31 x 4.40	A	03-0369
	056.109.564	31 x 3.45	A	03-0093		31 x 4.45	A	03-0370
	056.109.565	31 x 3.50	A	03-0094		31 x 4.50	A	03-0371
	056.109.566	31 x 3.55	A	03-0095		31 x 4.55	A	03-0372
	056.109.567	31 x 3.60	A	03-0096		31 x 4.60	A	03-0373

SHIM KIT	68 PIECE KIT	2.65-4.30		03-1050	34 x 2 per size			
	136 PIECE KIT	2.65-4.30		03-1051	34 x 4 per size			
	120 PIECE KIT	3.05-4.20		03-1053	24 x 5 per size			

VOLVO	463546-2	33 x 3.30	A	03-0017	463559-5	33 x 3.95	A	03-0030
240/ 242/ 244/ 245/ 260/ 740	463547-0	33 x 3.35	A	03-0018	463560-0	33 x 4.00	A	03-0031
B19 1.9l/B21 2.1l	463548-8	33 x 3.40	A	03-0019	463561-1	33 x 4.05	A	03-0032
B23 2.3l/B230 2.3l	463549-6	33 x 3.45	A	03-0020	463562-9	33 x 4.10	A	03-0033
	463550-4	33 x 3.50	A	03-0021	463563-7	33 x 4.15	A	03-0034
	463551-2	33 x 3.55	A	03-0022	463564-5	33 x 4.20	A	03-0035
	463552-0	33 x 3.60	A	03-0023	463565-2	33 x 4.25	A	03-0036
	463553-8	33 x 3.65	A	03-0024	463566-0	33 x 4.30	A	03-0037
	463554-6	33 x 3.70	A	03-0025	463567-8	33 x 4.35	A	03-0038
	463555-3	33 x 3.75	A	03-0026	463568-6	33 x 4.40	A	03-0039
	463556-1	33 x 3.80	A	03-0027	463569-4	33 x 4.45	A	03-0040
	463557-9	33 x 3.85	A	03-0028	463570-2	33 x 4.50	A	03-0041
	463558-7	33 x 3.90	A	03-0029				

SHIM KIT	100PIECE KIT	3.30-4.50		03-1067	25 x 4 per size			

VOLVO DIESEL		31 x 2.65	A	03-0303	1257068	31 x 3.65	A	03-0097
240/ 244/ 245 GLD		31 x 2.70	A	03-0304	1257069	31 x 3.70	A	03-0098
740/ 760 2.4TD		31 x 2.75	A	03-0305	1257070	31 x 3.75	A	03-0099
		31 x 2.80	A	03-0306	1257071	31 x 3.80	A	03-0100
		31 x 2.85	A	03-0307	1257072	31 x 3.85	A	03-0101
		31 x 2.90	A	03-0308	1257073	31 x 3.90	A	03-0102
		31 x 2.95	A	03-0309	1257074	31 x 3.95	A	03-0103
	1257810	31 x 3.00	A	03-0199	1257075	31 x 4.00	A	03-0104
	1257811	31 x 3.05	A	03-0200	1257076	31 x 4.05	A	03-0105
	1257812	31 x 3.10	A	03-0201	1257077	31 x 4.10	A	03-0106
	1257813	31 x 3.15	A	03-0202	1257078	31 x 4.15	A	03-0107
	1257814	31 x 3.20	A	03-0203	1257079	31 x 4.20	A	03-0108
	1257815	31 x 3.25	A	03-0204	1257080	31 x 4.25	A	03-0109
	1257061	31 x 3.30	A	03-0090		31 x 4.30	A	03-0310
	1257062	31 x 3.35	A	03-0091		31 x 4.35	A	03-0368
	1257063	31 x 3.40	A	03-0092		31 x 4.40	A	03-0369
	1257064	31 x 3.45	A	03-0093		31 x 4.45	A	03-0370
	1257065	31 x 3.50	A	03-0094		31 x 4.50	A	03-0371
	1257066	31 x 3.55	A	03-0095		31 x 4.55	A	03-0372
	1257067	31 x 3.60	A	03-0096		31 x 4.60	A	03-0373

SHIM KIT	68 PIECE KIT	2.65-4.30		03-1050	34 x 2 per size			
	136 PIECE KIT	2.65-4.30		03-1051	34 x 4 per size			
	120 PIECE KIT	3.05-4.20		03-1053	24 x 5 per size			

PRE-COMBUSTION CHAMBERS

PART NUMBER	ENGINE TYPE	VEHICLE USED IN	CC	NO. OF CYLS	DIMENSIONS	STYLE
BMPCC800000	M21D24	BMW 5 SERIES	2443	6	37.5 x 31 x 4.3 x 17.8	1
BMPCC800001	M51D25	BMW 5SERIES OPEL/ VAUXHALL OMEGA	2495	6	27.5 x 312 x 4.3 x 17.8	1
CTPCC900000	M22-621	CITROEN CX2200	2175	4	29.6 x 36.5 x 4.8 x 19	1
CTPCC930000	M25-629	CITROEN CX2500	2500	4	29.6 x 36.5 x 5.1 x 19.3	1
DHPCC680000	CL	DAIHATSU CHARADE	993	3	25 x 30.5 x 5.3 x 16.3	1
DHPCC920000	DL	DAIHATSU ROCKY	2765	4	28.8 x 36.5 x 4.3 x 15.3	1
FDPCC800000	D16	FORD ESCORT FIESTA ORION	1608	4	26.65 x 31 x 4.3 x 17.8	1
FDPCC825000 FDPCC825000STD	D18TC	FORD ESCORT FIESTA-MONDEO SIERRA	1753	4	27.5 x 31.8 x 5.3 x 17.8 27.5 x 31.25 x 5 x 17.5	1 1
FTPCC820000STD	182A7.000	FIAT BRAVA BRAVO MAREA	1910	4	36 x 31.4 x na x 62	2
FTPCC820001STD	188A2.000 188A3.000	DOBLO PUNTO N/ASP	1910	4	na x 31.1 x na x 72.7	2
FTPCC826000STD	176B3.000	FIORINO PALIO PUNTO MAREA N/ASP	1929	4	na x 26.5 x na x 58	2
FTPCC930000	8140.61 8144.91	FIAT 131 132 DAILY	2445	4	30.35 x 36.5 x 4.8 x 23.8	1
IZPCC760000	4ECI 4EC1T	ISUZU GEMINI OPEL/VAUXHALL CORSA KADET	1471	4	25.3 x 30.5 x 4.3 x 17.3	1
IZPCC790000	4EE1	OPEL/VAUXHALL ASTRA CORSA VECTRA	1686	4	26.75 x 33.5 x 4.3 x 18.8	1
IZPCC790001 IZPCC790001STD	4EE1T 1994>	OPEL/VAUXHALL ASTRA CORSA VECTRA	1686	4	26.75 x 33.5 x 4.3 x 18.8 26.75 x 33 x 4 x 18.5	1 1
IZPCC790002 IZP[CC790002	4EEIT >1994	OPEL/VAUXHALL ASTRA CORSA VECTRA	1686	4	28.75 x 33.5 x 4.3 x 18.8 28.75 x 35 x 4 x 18.5	1 1
IZPCC954000 IZPCC954000STD	4JG2TC	ISUZU TROOPER OPEL/VAUXHALL MONTEREY	3059	4	34.5 x 39.5 x 5 x 22.1 34.5 x 39 x 4.7 x 21.8	1 1
LRPCC904700	2.25 DIESEL	LAND ROVER 88 109	2286	4	58.9 x 34.7 x 4.5 x 19.4	1
LRPCC904701	12J	LAND ROVER 90 110	2494	4	31.35 x 37.15 x 4.6 x 19.6	1
LYPCC730000	1.5 DIESEL	BL J2 J4 CAMBRIDGE	1489	4	26.2 x 30.75 x 3.8 x 20.1	1
LYPCC802500	1.8 DIESEL	BL SHERPA	1798	4	28.2 x 34 x 5.3 x 21.9	1
MIPCC911000	4D55T	PAJERO	2346	4	na x 34.6 x 24.8 x 24.5	5
MIPCC911001	4d56T	PAJERO	2476	4	na x 34.6 x 24.8 x 24.8	5
MIPCC950000 MIPCC950000STD	4M40T	MISUBISHI PAJERO 2.8TD	2835	4	na x 34.5 x 13.3 x 13.3 na x 34 x 13 x 13	3 3

PART NUMBER	ENGINE TYPE	VEHICLE USED IN	CC	NO. OF CYLS	DIMENSIONS DGxDFxSTxH	STYLE
NSPCC770000	LD23	NISSAN VANNETTE SERENA	2283	4	29.4 x 34.1 x 4.8 x 19.1	1
NSPCC830000	SD33	NISSAN PATROL	3246	6	31.8 x 35.5 x 5.3 x 17.8	1
NSPCC845000	CD20	NISSAN ALMERA PRIMERA SUNNY	1974	4	28.3 x 33.5 x 5 x 19	1
NSPCC850000	RD28T	NISSAN PATROL	2826	6	28.3 x 33.6 x 4.7 x 21.7	1
NSPCC960000	TD27T	LONDON TAXI FORD MAVERICK NISSAN TERRANO	2663	4	33.8 x 37.5 x 6.3 x 21.6	1
OPPCC800000	16D 16DA 17D >1988	OPEL/VAUXHALL ASTRA	1598 1699	4	25.8 x 31.5 x 4.3 x 17.3	
OPPCC825000					26.6 x 32.5 x 4.3 x 17.3	1
OPPCC82500STD	16D 16DA 17D X17DTL 1988>	OPEL/VAUXHALL ASTRA	1598 1699	4	26.6 x 31.85 x 4 x 17	1
OPPCC920000	23YD	OPEL/VAUXHALL CARLTON RECORD OMEGA	2260	4	29.6 x 34.5 x 4.3 x 22.9	1
PGPCC750000	TUD3	CITROEN SAXO PEUGEOT 106 ROVER METRO	1360	4	25.85 x 30.1 x 4.4 x 15.6	1
PGPCC770000	TUD5	CITROEN SAXO PEUGEOT 106 NISSAN MICRA	1527	4	26.9 x 31.5 x 4.3 x 17	1
PGPCC822000						
PGPCC822000STD	DW8	CITROEN BELINGO PEUGEOT 206 EXPERT PARTNER	1868	4	28.7 x 32.6 x 4.5 x 18.7	1
PGPCC830000	XUD7 XUD7TE XUD9 XUD9T	CITROEN BX19 XANTIA PEUGEOT 205 305 309	1769		28.1 x 32.5 x 4.3 x 18.3	1
PGPCC830000STD	XUD9TE	ROVER 218 418	1905	4	28.1 x 32 x 4 x 18	1
PGPCC920000		CITROEN JUMPER RELAY PEUGEOT			32.2 x 36.9 x 4.3 x 22.8	1
PGPCC920000STD	DJ5T	BOXER 605 806	2445	4	31.4 x 36.5 x 4 x 22.5	1
PGPCC920001					32.2 x 37.5 x 4.5 x 22.8	1
PGPCC920001STD	DJ5	PEUGEOT BOXER	2445	4	31.7 x 37 x 4.2 x 22.5	1
PGPCC920002					32.2 x 37.5 x 4.5 x 22.8	1
PGPCC920002STD	DK5ATE	PEUGEOT 605	2445	4	31.7 x 37 x 4.2 x 22.5	1
PGPCC920003	DJ5T DK5ATE	PEUGEOT 605	2445	4	39.7 x 34.5 x 4.3 x 19.3	1
PGPCC940000	XD3 XD3P	FORD GRANADA PEUGEOT 505	2498	4	31.75 x 37 x 4.3 x 19.3	1
PGPCC940001	XD2	FORD SIERRA PEUGEOT 504 505	2304	4	28.75 x 35.65 x 4.3 x 18.6	1
PGPCC940002	XD3T XD3TE	FORD GRANADA PEUGEOT 604 GTD	2498	4	31.75 x 37.15 x 4.3 x 21.3	1
PKPCC794000	4.99 4.108	PERKINS VARIOUS	1760	4	na x 32 x 10 x 10	3

PART NUMBER	ENGINE TYPE	VEHICLE USED IN	CC	NO. OF CYLS	DIMENSIONS	STYLE
RNPCC800000	F8M-730 F8Q	RENAULT CLIO EXPRESS VOLVO 340 343 345	1595 1870	4	27.8 x 38.1 x 4.5 x 32.9	4
RNPCC800001	F8M- 720	RENAULT 9 11 VOLVO 340 >1990	1595	4	27.8 x 34.1 x 4.5 x 32.9	4
RNPCC800002	F8M-700	RENAULT 9 11 VOLVO 340 1990>	1595	4	27.8 x 34.1 x 4.5 x 32.9	4
RNPCC800003 RNPCC800003STD	F8Q-620	RENAULT MEGANE	1870	4	32 x 38.1 x 4.5 x 17.9 32 x 37.5 x 4.25 x 17.6	1 1
RNPCC800004 RNPCC800004STD	F8Q-630/632/662/784/786	RENAULT KANGOO MEGANE SCENIC TRAFIC	1870	4	32 x 38.1 x 4.5 x 17.9 32 x 37.5 x 4.25 x 17.6	1 1
RNPCC860000	J8S TD	RENAULT ESPACE LAGUNA	2068	4	30.1 x 36 x 4.5 x 18.5	1
RNPCC860001	J8S	RENAULT ESPACE LAGUNA	2068	4	30.1 x 36 x 4.5 x 18.5	1
RNPCC870000 RNPCC870000STD	G8T	RENAULT LAGUNA MEGANE	2188	4	29.65 x 37.15 x 4.5 x 20.3 29.65 x 36.65 x 4.2 x 20	1 1
RNPCC870001 RNPCC870001STD	G8T-706	RENAULT LAGUNA	2188	4	29.65 x 37.15 x 4.5 x 20.3 29.65 x 36.65 x 4.2 x 20	1 1
TYPCC860000	1C 2C	TOYOTA CAMRY	1839	4	27.5 x 32 x 5.3 zx 20.8	1
TYPCC860001 TYPCC860001STD	2CT	TOYOTA AVENSIS CAMRY CARINA	1975	4	27.5 x 32 x 5.3 zx 20.8 27.5 x 31.45 x 5 x 20.5	1 1
TYPCC860002 TYPCC860002STD	3C-TE	TOYOTA PICNIC	2184	4	31.05 x 34.2 x 5.3 x 20.1 31.05 x 33.7 x 5 x 19.8	1 1
TYPCC920000	2LT-NT	TOYOTA HILUX	2446	4	33.5 x 37.15 x 6.3 x 22.3	1
TYPCC960000 TYPCC960000STD	1KZ-T	TOYOTA LANDCRUISER	2982	4	34.1 x 39.2 x 6.5 x 23.3 34.1 x 38.5 x 6 x 22.8	1 1
VMPCC880000	VM80A	ALFA ROMEO 20TD VARIOUS	1995	4	29.6 x 34.5 x 4.8 x 19.6	1
VMPCC880001	HR488 HR494	ALFA ROMEO 20TD VARIOUS	1995	4	32.7 x 38.3 x 4.8 x 23.8	1
VMPCC920000	VM81A	ALFA ROMEO 90TD 164TD ROVER 824D	2393	4	30.35 x 36.5 x 4.8 x 23.8	1
VMPCC920001	HR924	ALFA ROMEO 164TD	2499	4	32.7 x 38.5 x 4.8 x 41.9	4
VWPCC765000	CP CR CY DV DW JF JK JP JR JX ME RA SB SV 1G 1S 1V	AUDI 80D/TD VOLKSWAGEN GOLF JETTA D/TD VOLVO 740 760 940 960 D/TD	1588 2383	4 6	27.35 x 32.5 x 4.3 x 17.3	1
VWPCC795000 VWPCC795000STD	AEY AFN AHU AVG 1Y 1Z	AUDI 80 100 FORD GALAXY VW GOLF PAASAT POLO SHARAN ALL TD WITH INTERCOOLER	1896	4	25.4 x 30.5 x 4.3 x 17.3 25.4 xz 30 x 4 x 17	1 1

PART NUMBER	ENGINE TYPE	VEHICLE USED IN	CC	NO. OF CYLS	DIMENSIONS	STYLE
VWPCC795001		AUDI 80	1896		27.85 x 32.5 x 4.3 x 17.3	1
	AAB AAZ ABL	VW GOLF POLO	2370	4		
VWPCC795001STD	AEF AJA 1X 1Y	ALL N/ASP ENGINES	2461	5	27.85 x 32 x 4 x 17	1
VWPCC795002		AUDI 80 VW GOLF POLO			27.85 x 32.5 x 4.3 x 17.3	1
	AAZ ABL AEF	PASSAT				
VWPCC795002STD	1Y	ALL TD ENGINES	1896	4	27.85 x 32 x 4 x 17	1

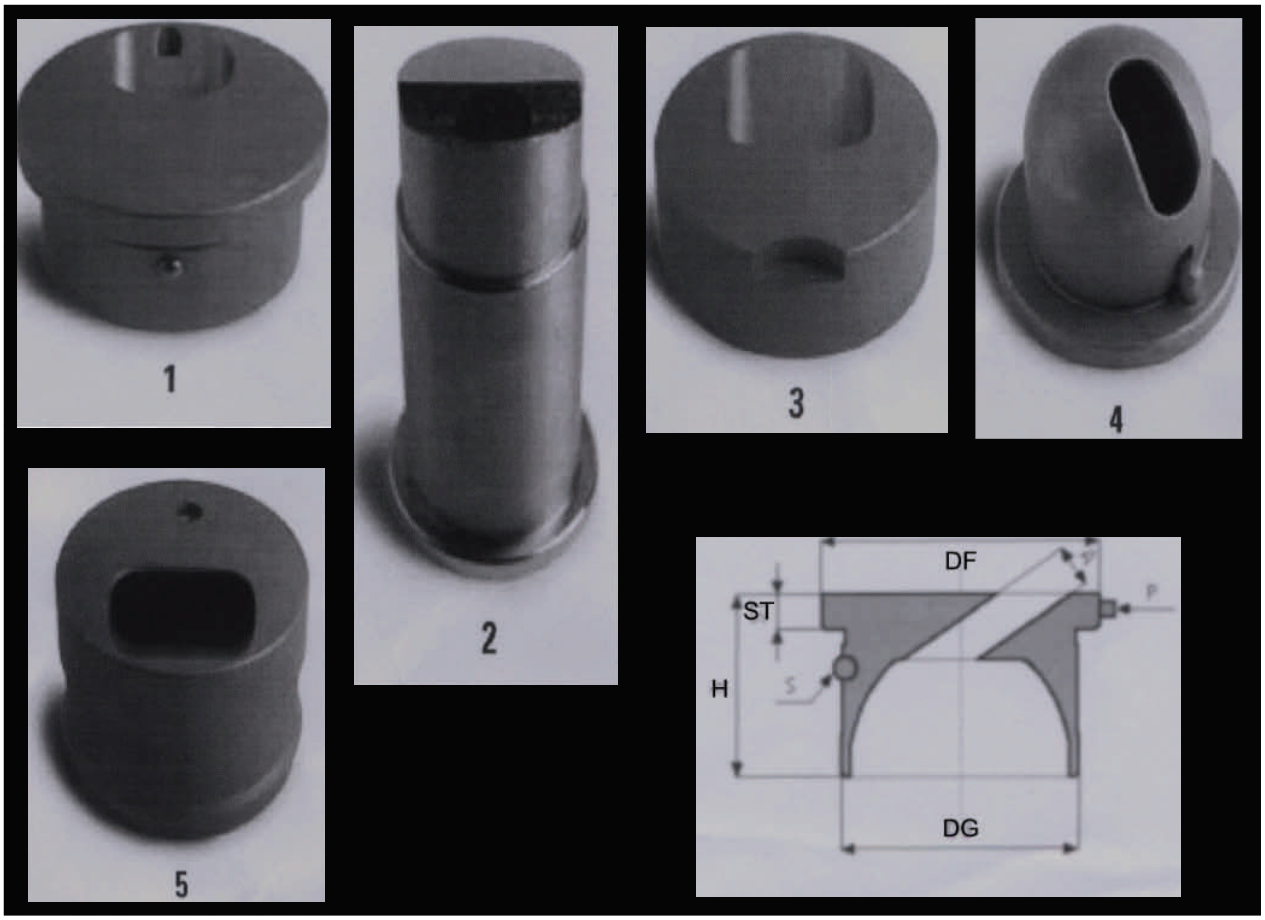

AE NUMBER	EP NUMBER	AE NUMBER	EP NUMBER	AE NUMBER	EP NUMBER
V2A001W	OPVX860001	V91161	FDVX936700	V91294	FTVX930000
V2A003W	FDVX800000	V91162	FDVI740000	V91309	ARVX840000
V2A007W	RVVX750000	V91168	FDVX825000	V91313	CTVX750000
V2A009W	FDVI825001	V91168U	FDVX825000	V91314	CTVI750000
V2A010W	FTVX820002	V91168W	FDVX825000	V91317	RNVI715000A
V2A011W	RNVX800004	V91169	LRVI904700	V91319	RNVX810000A
V2A013W	FTVX864000	V91170	LRVX904700	V91321	FTVX826000
V2A015W	OPVI860001	V91172	MZVX860002	V91322	RNVI910000
V2A016W	FDVX760000	V91173	VOVX960000	V91323	RNVX910000
V2A017W	FDVI825000	V91175	RVVI750001	V91325	SAVI900000
V2A018W	PGVX860003	V91176	RVVX750001	V91332	ADVI750001
V2A019W	OPVX790000	V91181	MBVI870000	V91334	ADVX795000
V3195	LRVI904704	V91182	MBVX870000	V91334U	ADVX795000
V34274	RVVI706103A	V91187	BMVI840006	V91334W	ADVX795000
V34430	LYVI130000	V91188	BMVX840006	V91335	ADVI765005
V34499	FDVX908000	V91189	BMVI800000	V91336	ADVI795000
V34499U	FDVX908000	V91190	BMVX800000	V91337	ADVI795000
V34877	TYVX810000	V91198	FDVI800000	V91338	ADVI810005
V34940	RVVX888000	V91199	FDVX800000	V91340	ADVX810004
V35018	MBVX909000	V91199U	FDVX800000	V91356	FDVI848000
V35039	VOVI889000	V91209	RVVI750000	V91356U	FDVI848000
V35040	VOVX889000	V91211	OPVI720000	V91356W	FDVI848000
V35117	RNVI700000A	V91212	OPVX720000	V91357	FDVX848000
V35122	FDVX908000	V91215	RVVI844501	V91366	SAVX900000
V3572	LRVX904703	V91216	RVVX844501	V91372	ADVX810002
V3573	LRVX904704	V91217	RVVI844500	V91376	IZVI930000
V90162	LYVX130000	V91218	RVVX844500	V91382	IZVX930000
V90178	FDVI908000	V91228	NSVX860000	V91400	FTVX930000
V90193	RVVI706100A	V91230	OPVI790001	V91407	ADVI810004
V90194	RVVX706100A	V91232	OPVX790001	V91407	ADVI810007
V90225	MBVI909000	V91240	LRVI904702	V91410	BMVI840003
V90230	OPVI825000	V91241	LRVX904702	V91411	BMVX840003
V90231	OPVX825000	V91241	LRVX904705	V91416	ADVI810002
V90303	JRVX830000	V91242	NSVI760000	V91418	BMVI840000
V90308	JRVI830000	V91243	NSVX760000	V91420	BMVI800001
V90334	LRVI904703	V91246	MIVX850000	V91421	BMVX800001
V90335	LRVX904703	V91255	LRVI904701	V91427	FDVI825001
V90356	RVVI706101A	V91256	LRVX904701	V91427U	FDVI825001
V90357	RVVX706101A	V91261	RNVX715000A	V91428	FDVX825001
V91030	ADVX810003	V91265	RNVX860000	V91428U	FDVX825001
V91034	ADVI810003	V91267	RNVX800000	V91429	OPVI860001
V91137	OPVI790003	V91268	RNVI810000A	V91429U	OPVI860001
V91138	OPVX790003	V91270	PGVI700000	V91430	OPVX860001
V91143	PGVI830000	V91271	PGVI720000	V91430U	OPVX860001
V91144	PGVI830001	V91272	PGVX700000	V91433	OPVI920000
V91145	PGVX830001	V91273	PGVX720000	V91434	OPVX920000
V91146	FDVI772400A	V91273U	PGVX720000	V91437	VMVI920000
V91147	FDVX772400A	V91275	PGVX830002	V91438	VMVX920000
V91147U	FDVX772400A	V91277	PGVI830002	V91441	MBVI890000
V91148	DWVI860000	V91288	FTVI700001	V91445	MBVI955000
V91150	DWVX860000	V91289	FTVX700000	V91446	MBVI885000
V91157	SZVX665000	V91291	FTVI826000	V91447	MBVX885000
V91158	FDVI687000	V91292	FTVI930000	V91469	PGVI860000
V91159	FDVX687000	V91292U	FTVI930000	V91470	PGVX860000
V91160	FDVI936700	V91293	FTVX930000	V91473	ADVX750000

AE NUMBER	EP NUMBER	AE NUMBER	EP NUMBER	AE NUMBER	EP NUMBER
V91493	NSVI960000	V91972	PGVI860001	V94057U	FDVX720001
V91494	NSVX960000	V91973	RNVI820000	V94058	FDVI760003
V91622	ARVI870000	V91976	VOVI960000	V94060	FDVI800001
V91623	ARVI840000	V91988	LRVI904705	V94061	FDVX800001
V91623	ARVX870000	V91991	FDVX760000	V94062	PGVI920000
V91624	ARVI880000	V91991U	FDVX760000	V94063	PGVX920000
V91625	ARVX880000	V91994	FTVI930002	V94064	FTVI820004
V91631	ARVI930001	V91994	FTVX930002	V94065	FTVX820004
V91632	ARVX930001	V91994U	FTVX930002	V94069	RNVX800000
V91637	FTVI840000	V91995	OPVI790000	V94072	FDVI760001
V91638	FTVX840000	V91995U	OPVI790000	V94073	FDVX760001
V91720	TYVI920000	V91995W	OPVI790000	V94074	FDVI848001
V91731	HDVX750001	V91996	OPVX790000	V94074U	FDVI848001
V91732	HDVI750000	V91996U	OPVX790000	V94075	FDVX848000
V91733	HDVX750000	V91996W	OPVX790000	V94076	FDVX848001
V91821	FDVI825000	V91997	OPVI860000	V94076U	FDVX848001
V91821U	FDVI825000	V91997U	OPVI860000	V94077	RNVI800000
V91834	RNVX715000A	V91997W	OPVI860000	V94079	ADVI825001
V91835	RNVI758000	V91998	OPVX860000	V94080	ADVX825001
V91835U	RNVI758000	V91998U	OPVX860000	V94081	ADVI810000
V91835W	RNVI758000	V91998W	OPVX860000	V94081U	ADVI810000
V91836	RNVX758000	V94000	FDVI720000	V94082	ADVX810001
V91836U	RNVX758000	V94001	FDVX720000	V94082U	ADVX810001
V91836W	RNVX758000	V94002	FDVI760002	V94083	ADVX810000
V91895	RNVI800001	V94003	FDVX760002	V94083U	ADVX810000
V91898	FDVI760000	V94006	FDVI860000	V94084	ADVI795002
V91898U	FDVI760000	V94007	FDVX860000	V94085	ADVX795002
V91925	BMVI840002	V94008	BMVI800003	V94086	BMVIX840005
V91926	BMVX840002	V94009	BMVX800003	V94087	BMVI840001
V91927	FTVI820000	V94010	ADVI795001	V94088	BMVX840001
V91927U	FTVI820000	V94010U	ADVI795001	V94089	BMVI800002
V91928	FTVX820000	V94012	ADVX795001	V94090	BMVX800002
V91928U	FTVX820000	V94012U	ADVX795001	V94093	HDVI840000
V91929	FTVI700000	V94015	NSVI710000	V94094	HDVX840000
V91931	FTVI820003	V94016	NSVX710000	V94097	OPVI840000
V91932	FTVX820003	V94018	RVVI844502	V94098	OPVX840000
V91933	FTVI820002	V94019	RVVX844502	V94101	RVVI800000
V91933U	FTVI820002	V94029	FTVI708000	V94101U	RVVI800000
V91934	FTVX820002	V94030	FTVX708000	V94102	RVVX800000
V91934U	FTVX820002	V94038	RNVI827000	V94102U	RVVX800000
V91937	FTVI820001	V94038U	RNVI827000	V94104	SAVI900001
V91938	FTVX820001	V94038W	RNVI827000	V94105	SAVX900000
V91939	FTVI930001	V94039	RNVX827000	V94108	ADVI795005
V91940	FTVX930001	V94039U	RNVX827000	V94109	ADVX795005
V91949	FTVI864000	V94039W	RNVX827000	V94109U	ADVX795005
V91950	FTVX864000	V94043	VOVI810000	V94110	ADVI825000
V91955	BMVX840000	V94044	RNVX827003	V94110U	ADVI825000
V91958	MBVX890000	V94044U	RNVX827003	V94111	ADVX825000
V91959	OPVI776000	V94045	VOVI810002	V94112	ADVI795004
V91960	OPVX776000	V94046	VOVX810002	V94113	ADVX795004
V91961	MZVI860001	V94047	VOVX810000	V94114	ADVI765001
V91962	MZVX860000	V94053	RVVX750000	V94115	ADVX765001
V91963	MZVI860000	V94053U	RVVX750000	V94116	ADVI765000
V91964	MIVI911002	V94056	FDVI720001	V94117	ADVX765000
V91970	PGVX860001	V94057	FDVX720001	V94118	SBVI920003

AE NUMBER	EP NUMBER	AE NUMBER	EP NUMBER	AE NUMBER	EP NUMBER
V94119	SBVX920003	V94217	PGVX860005	V94381	FDVX899000
V94123	SBVX920002	V94217U	PGVX860005	V94382	FDVI806000
V94124	SZVI750000	V94225	FDVX806000	V94386	FDVI824000
V94125	SZVX750000	V94229	PGVI860005	V94387	FDVX824000
V94126	SZVI840000	V94230	FDVX860001	V94388	MBVI899001
V94129	SZVX840000	V94231	FDVI860001	V94389	MBVX899001
V94132	TYVI690000	V94245	OPVI725000	V94390	MBVI899002
V94133	TYVX690000	V94246	OPVX725000	V94391	MBVX899002
V94134	TYVI750000	V94247	ADVI765004	V94394	MBVI800000
V94135	TYVX750000	V94248	ADVX765004	V94395	MBVX800000
V94136	TYVI810001	V94249	OPVI805000	V94398	MBVI880000
V94137	TYVX810001	V94250	OPVX805000	V94399	MBVX880000
V94138	TYVI860003	V94278	MBVI870002	V94402	BMVI840004
V94139	TYVX860003	V94279	MBVX870003	V94403	BMVX840004
V94142	TYVI790000	V94280	MBVX870002	V94404	ADVI765006
V94143	TYVX790000	V94283	MBVI955001	V94405	ADVX765006
V94147	ADVI795003	V94284	MBVI829000	V94414	ADVI795005
V94148	ADVX795003	V94285	MBVX829000	V94418	ADVI755000
V94149	ADVI671000	V94289	MBVX899004	V94419	ADVX755000
V94155	PGVI750000	V94290	MBVI870001	V94420	ADVI720000
V94156	PGVX750000	V94291	MBVX870001	V94421	ADVX720000
V94157	PGVI750001	V94301	ADVX810005	V94422	ADVI783000
V94167	PGVI860007	V94304	ADVI810001	V94423	ADVX783000
V94167U	PGVI860007	V94305	ADVI750000	V94424	ADVI810011
V94168	PGVX860007	V94306	ADVX810010	V94425	ADVX810011
V94168U	PGVX860007	V94307	ADVI825001	V94426	OPVI790002
V94169	PGVI860002	V94308	ADVI750002	V94427	OPVX790002
V94170	PGVX860002	V94309	ADVX750002	V94428	KAVI971000
V94171	CTVI770000	V94311	ADVI765002	V94429	KAVX971000
V94172	CTVX770000	V94315	RNVI827003	V94432	NSVI760000
V94175	PGVI860003	V94319	RNVX870000	V94433	NSVX860002
V94175U	PGVI860003	V94325	MIVX911002	V94434	NSVX760002
V94176	PGVX860003	V94326	NSVX850000	V94435	NSVX760000
V94176U	PGVX860003	V94329	NSVI850001	V94436	RNVI827002
V94178	PGVI850000	V94330	NSVI850000	V94440	RNVX827002
V94179	PGVX850000	V94338	RNVI800004	V94448	NSVI870000
V94180	RNVI690000	V94339	RNVX810000A	V94449	NSVX870000
V94180U	RNVI690000	V94340	NSVX845000	V94450	ADVI810006
V94181	RNVX690000	V94348	FDVX825002	V94452	NSVX850001
V94181U	RNVX690000	V94349	BMVI770000	V94454	TYVI822000
V94190	RNVI800002	V94350	BMVX770000	V94455	TYVX822000
V94190U	RNVI800002	V94359	LRVI844500	V94458	TYVX920001
V94191	RNVX800002	V94360	LRVX844500	V94459	TYVI860004
V94191U	RNVX800002	V94366	DWVI790000	V94460	TYVX860004
V94192	NSVI860000	V94367	DWVX790000	V94461	HYVI660000
V94194	NSVI860002	V94368	DWVI685000	V94462	HYVX660000
V94197	ADVX671000	V94369	DWVX685000	V94463	MIVI850001
V94200	PGVI860004	V94370	MBVI899000	V94464	MIVX850001
V94201	PGVX860004	V94372	TYVI950000	V94477	NSVI845000
V94202	PGVI720001	V94373	TYVX950000	V94480	MBVI899003
V94203	PGVI785000	V94376	MBVX955001	V94481	FTVX930004
V94204	PGVX785000	V94377	MBVX899003	V94486	PGVI850003
V94212	ADVI765003	V94378	FDVI860002	V94487	PGVX850003
V94214	FDVI760004	V94379	FDVX860002	V94488	PGVI860006
V94215	FDVX760003	V94380	FDVI899000	V94489	PGVX860006

AE NUMBER	EP NUMBER	AE NUMBER	EP NUMBER	AE NUMBER	EP NUMBER
V94490	PGVI850002	VAG154	01-0139	VAG92066	01-0829
V94491	PGVX850002	VAG207	01-0887	VAG92071	01-1896
V94492	PGVI830003	VAG330	01-0303	VAG92072	01-1897
V94493	PGVX830003	VAG379	01-0112	VAG92073	01-1905
V94494	PGVI850001	VAG380	01-0115	VAG92078	01-1908
V94495	PGVX850001	VAG414	01-0359	VAG92079	01-1909
V94498	RNVI795001	VAG444	01-0358	VAG92080	01-1910
V94499	RNVX795001	VAG474	01-0051	VAG92083	01-1303
V94502	MBVX899000	VAG50758	01-0394	VAG92084	01-1741
V94513	RNVI870001	VAG50826	01-0889	VAG92089	01-1449
V94514	RNVX870001	VAG50827	01-0890	VAG92090	01-1646
V94552	RNVX880000	VAG50828	01-1283	VAG92092	01-1447
V94553	RNVI860000	VAG50909	01-1276	VAG92093	01-1448
V94562	RNVI870000	VAG50911	01-1277	VAG92098	01-1956
V94566	PGVX920001	VAG50911	01-0028	VAG92102	01-1883
V94567	PGVI920001	VAG50912	01-0318	VAG92105B	01-1498
V94568	TYVX740000	VAG50913	01-1353	VAG92108	01-0108
V94570	MIVX710000	VAG50914	01-1352	VAG92109	01-0110
V94572	MZVX780001	VAG50919	01-1244	VAG92138	01-2059
V94573	RNVI827001	VAG50923	01-1388	VAG92149	01-2143
V94574	RNVX827001	VAG50931	01-1259	VAG92150	01-2144
V94580	ADVI750001	VAG50948	01-1248	VAG92158	01-0783
V94581	TYVX920000	VAG50949	01-1247	VAG92159	01-0784
V94582	FTVX820002	VAG50963	01-1275	VAG92166	01-2077
V94586	MZVI860002	VAG50969	01-1278	VAG92167	01-2078
V94588	ARVI820000	VAG50988	01-1467	VAG92170B	01-1913
V94589	ARVX820000	VAG50995	01-1539	VAG92171B	01-1309
V94599	PGVI785001	VAG50996	01-1540	VAG92179	01-0943
V94601	PGVI770000	VAG50998	01-1299	VAG92198	JRVG830000
V94602	PGVX770000	VAG51007	01-0942	VAG92200B	01-0527
V94603	CTVI737000	VAG51028B	01-0524	VAG92209	01-2056
V94604	CTVX737000	VAG532	01-0888	VAG92210	01-2057
V94606	RNVI827004	VAG547	01-0345	VAG92221	01-1993
V94607	RNVX827004	VAG548	01-0346	VAG92251	01-0788
V94608	RNVI760000	VAG578	01-0426	VAG92282	01-1770
V94609	RNVX760000	VAG584	01-0868	VAG92287	01-2058
V94636	DWVI765000	VAG586	01-0377	VAG92288B	01-S2674
V94637	DWVX765000	VAG693	01-1274	VAG92291	01-2179
V94644	ADVI671001	VAG698	01-0970	VAG92292	01-2345
V94645	ADVX671001	VAG701	01-1350	VAG92293	01-2346
V94651	ADVI765008	VAG721	01-1385	VAG92294	01-2317
V94652	ADVX765008	VAG722	01-1243	VAG92297	01-2099
V94667	RNVX800004	VAG92016	01-0803	VAG92298	01-2101
V94670	TYVI710000	VAG92017	01-0804	VAG92299	01-0934
V94671	TYVX710000	VAG92035	01-0389	VAG92300	01-0935
V94672	TYVI860005	VAG92040	01-1700	VAG92303B	01-1871
V94673	TYVX860005	VAG92041	01-1699	VAG92309	01-2499
V94691	ADVI825002	VAG92044V1	01-1937	VAG92310	01-0969
V94693	FDVI830000	VAG92046	01-2166	VAG92318	01-2577
V94694	FDVX830000	VAG92047	01-2167	VAG92319	01-2580
V94704	ADVX825002	VAG92051	01-0937	VAG92321	01-2058
V94705	RNVI690001	VAG92059	01-1975	VAG92322	01-2170
V94706	RNVX690001	VAG92061B	01-1227	VAG92323	01-2171
V94709	ADVI810010	VAG92064	01-0893	VAG92324	01-2554
V94939	RVVI888000	VAG92065	01-0894	VAG92325	01-2206

AE NUMBER	EP NUMBER	AE NUMBER	EP NUMBER	AE NUMBER	EP NUMBER
VAG92327	01-2611	VAG96023	01-2259		
VAG92327	01-2612	VAG96024	01-2564		
VAG92329B	01-2105	VAG96025	01-2500		
VAG92330B	01-2054	VAG96027	01-2504		
VAG92331B	01-2053	VAG96028	01-2482		
VAG92332B	01-2298	VAG96029	01-2484		
VAG92333B	01-2301	VAG96046	01-2529		
VAG92337	01-1961	VAG96047	01-2419		
VAG92340	01-2196	VAG96048	01-2422		
VAG92342B	01-2127	VAG96049	01-2435		
VAG92347B	01-1873	VAG96049	01-2438		
VAG92359	01-2514	VAG96050	01-2594		
VAG92360	01-2512	VAG96051	01-2596		
VAG92364	01-0507	VAG96055	01-2568		
VAG92366	01-1468	VAG96056	01-2301		
VAG92367B	01-2090	VAG96057	01-2582		
VAG92370	01-2323	VAG96062	01-2464		
VAG92372	01-2149	VAG96065	01-2635		
VAG92378B	01-2067	VAG96066	01-S2739		
VAG92379B	01-2069	VAG96067	01-2700		
VAG92380B	01-2125	VAG96068	01-2697		
VAG92382B	01-2208	VAG96069	01-2666		
VAG92384	01-2561	VAG96070	01-2667		
VAG92385	01-2562	VAG96071	01-2349		
VAG92397	01-2319	VAG96072	01-2699		
VAG92398	01-2320	VAG96076	01-S2656		
VAG92399	01-2589	VAG96077	01-S2656		
VAG92401	01-2314	VAG96095	01-2522		
VAG92406	01-2493	VAG96096	01-2453		
VAG92411	01-2071	VAG96097	01-S2678		
VAG92412	01-2074	VAG96098	01-S2785		
VAG92414B	01-2061	VAG96099	01-S2787		
VAG92435B	01-0396	VAG96104	01-2698		
VAG92444	01-1811	VAG96105	01-2743		
VAG92445	01-1265	VAG96106	01-S2702		
VAG92455	01-2159	VAG96107	01-2703		
VAG92465B	01-2290	VAG96108	01-S2704		
VAG92484	01-2501	VAG96112	01-S2671		
VAG92496	01-2244	VAG96113	01-S2636		
VAG92498	01-2049	VAG96113	01-S2636		
VAG92511	01-2627	VAG96114	01-S2686		
VAG93	01-0378	VAG96118	01-2779		
VAG96001	01-1921	VAG96119	01-S2750		
VAG96002	01-1948	VAG96123	01-2474		
VAG96003	01-1945	VAG96124	01-2406		
VAG96004	01-1944	VAG96132	01-2441		
VAG96005	01-1950				
VAG96006	01-1947				
VAG96010	01-1946				
VAG96013	01-1943				
VAG96014	01-1940				
VAG96018	01-1942				
VAG96019	01-1941				
VAG96021	01-2093				
VAG96022	01-1951				

TRW NUMBER	EP NUMBER	TRW NUMBER	EP NUMBER	TRW NUMBER	EP NUMBER
105-03085	LRVI904703	110-G00699	01-2077	110-G05614	01-2342
105-03572	LRVX904703	110-G00701	01-1350	110-G05633	01-2474
105-03573	LRVX904704	110-G00721	01-1385	110-G05636	01-2477
105-34430	LYVI130000	110-G00722	01-1243	110-G05639	01-2433
105-34939	RVVI888000	110-G01000	01-1893	110-G05640	01-2407
105-34940	RVVX888000	110-G01703	01-0480	110-G05641	01-2409
105-35367	LYVX130000	110-G01706	01-0195	110-G07200	01-2589
105-35419	LRVI904701	110-G01727	01-1811	110-G07201	01-2590
105-35420	LRVX904701	110-G01728	01-2090	110-G08002	01-2499
105-35445	LRVI904700	110-G01730	01-0287	110-G17001	01-2433
105-35446	LRVX904700	110-G01774	01-0507	110-G34002	01-S2656
105-35462	RVVI844501	110-G01774	01-0507	110-G50911	01-1277
105-35463	RVVX844501	110-G01777	01-1467	110-G50911	01-1278
105-35474	RVVI750000	110-G01779	01-2244	110-G50913	01-1353
105-35475	RVVX750000	110-G01781	01-2248	110-G50914	01-1352
105-35476	LRVI904702	110-G01782	01-0173	110-G50919	01-1244
105-35477	LRVX904702	110-G01782	01-2603	110-G50931	01-1259
105-35477	LRVX904705	110-G03303	01-2488	110-G50932	01-1260
105-35484	RVVI750001	110-G04700	01-2306	110-G50933	01-0935
105-35485	RVVX750001	110-G04702	01-2308	110-G50933	01-1752
105-35486	RVVI844500	110-G05127	01-2105	110-G50935	01-2497
105-35487	RVVX844500	110-G05128	01-2054	110-G50935	01-2497
105-35488	RVVX844501	110-G05130	01-2508	110-G50936	01-2573
105-35508	FDVI936700	110-G05132	01-2582	110-G50948	01-1248
105-35509	FDVX936700	110-G05133	01-1342	110-G50949	01-1247
105-35514	FDVX760000	110-G05136	01-0396	110-G50950	01-0783
105-35528	FDVX848000	110-G05138	01-2502	110-G50951	01-0784
105-35529	FDVI825001	110-G05138	01-2502	110-G50955	01-2554
105-35530	FDVX825001	110-G05140	01-2510	110-G50955	01-5747
105-35531	FDVI760002	110-G05242	01-2325	110-G50964	01-1316
105-35532	FDVX760002	110-G05320	01-1956	110-G50966	01-1298
105-35533	FDVI720000	110-G05323	01-1411	110-G50967	01-1395
105-35534	FDVX720000	110-G05326	01-2053	110-G50998	01-1299
105-35539	FDVI720001	110-G05332	01-2328	110-G51047	01-1233
105-35540	FDVX720001	110-G05336	01-2331	110-G51047	01-2078
105-35541	FDVI760003	110-G05338	01-2314	110-G51062	01-0380
105-35542	FDVX760003	110-G05338	01-2459	110-G51066	01-1921
105-35549	FDVI760001	110-G05339	01-2298	110-G51068	01-1941
105-35550	FDVX760001	110-G05340	01-2159	110-G51069	01-1943
105-35551	FDVI848001	110-G05340	01-2301	110-G51101	01-1975
105-35552	FDVX848001	110-G05343	01-2438	110-G51107	01-1909
110-G00093	01-0378	110-G05363	01-1961	110-G51109	01-1937
110-G00154	01-0139	110-G05365	01-2419	110-G51112	01-2504
110-G00207	01-0887	110-G05368	01-2422	110-G51115	01-2122
110-G00330	01-0303	110-G05374	01-2334	110-G51117	01-0971
110-G00330	01-0303	110-G05376	01-2290	110-G51117	01-2077
110-G00390	01-0027	110-G05379	01-2434	110-G51118	01-1233
110-G00532	01-0888	110-G05383	01-2529	110-G51118	01-2078
110-G00578	01-0426	110-G05388	01-2441	110-G51119	01-1910
110-G00586	01-0377	110-G05600	01-1245	110-G51121	01-2564
110-G00601	01-0934	110-G05604	01-2116	110-G51123	01-1388
110-G00693	01-1274	110-G05606	01-2119	110-G52021	01-1940
110-G00697	01-0969	110-G05612	01-2375	110-G52024	01-1947
110-G00698	01-0970	110-G05613	01-2339	110-G52025	01-1993
110-G00699	01-0971	110-G05613	01-2339	110-G52025	01-1993

TRW NUMBER	EP NUMBER	TRW NUMBER	EP NUMBER	TRW NUMBER	EP NUMBER
110-G52030	01-1951	171033	FTVI820000	26110	MBVX885000
110-G52032	01-2093	171034	FTVX820000	26135	MBVI955000
110-G52040	01-0937	171036	FTVI864000	26145	MBVX870000
110-G52062	01-2317	171042	FTVX700000	26160	MBVI890000
110-G52063	01-2318	171043	FTVX864000	26166	MBVX899004
110-G52068	01-2482	171046	FTVI820004	26230	MBVI853000
110-G52068	01-S2482	171047	FTVX820004	26263	MBVX853000
110-G52069	01-2482	171052	FTVI708000	26264	MBVI870001
110-G77001	01-S2671	171053	FTVX708000	26265	MBVX870001
110-G77002	01-S2686	171055	FTVX930002	2631	MBVX909000
111004	BMVI860000	171061	FTVI820004	2655	MBVX890000
111005	BMVX860000	171062	FTVX820004	290002	OPVI840000
111008	BMVI840004	17238	ARVI930000	290003	OPVX840000
111009	BMVX840004	17241	ARVX930000	2908	OPVI920000
11104	BMVI840006	180001	FDVI800001	291030	OPVI790002
111052	BMVI800002	180002	FDVX800001	291031	OPVX790002
111053	BMVX800002	181005	FDVX825002	29107	DWVI860000
111113	BMVIX840005	181008	FDVX760003	29182	OPVI825000
11129	BMVX840006	181009	FDVI760004	29185	OPVI860001
11131	BMVI840000	181010	FDVI760002	29186	OPVX860001
11324	BMVX840000	181011	FDVX760002	29246	OPVX920000
11357	BMVI800001	181012	FDVI806000	29287	OPVI720000
11358	BMVX800001	181016	FDVI899000	29292	DWVX860000
11359	BMVI840003	181017	FDVX899000	29296	OPVX720000
11360	BMVX840003	181018	FDVI860002	29300	OPVX790003
1155	BMVI800000	181019	FDVX860002	29316	OPVI790003
1156	BMVX800000	18283	FDVI860001	29354	OPVX860000
11612	BMVX800003	18284	FDVX860001	29375	OPVI860000
11613	BMVI800003	18329	FDVI760000	29383	OPVI776000
11672	BMVX840001	18330	FDVI848000	29384	OPVX776000
11673	BMVI840001	18353	FDVI860000	29397	OPVI790000
11682	BMVX800002	18354	FDVX860000	29416	OPVX825000
11732	BMVI800002	18365	FDVI687000	29429	OPVX790000
11960	BMVI840002	18366	FDVX687000	29455	OPVI725000
11964	BMVX840002	18367	FDVI740000	29456	OPVX725000
157579	PGVI860001	18368	FDVI800000	33022	ADVI810003
157580	PGVX860001	18369	FDVX800000	33023	ADVX810003
157714	CTVI750000	18374	FDVI825000	33034	ADVI810005
157729	CTVX750000	18375	FDVX825000	33035	ADVX810004
160056	MBVI102000	18391	FDVX848000	33035	ADVX810005
160057	MBVX102000	18394	FDVI930000	33046	ADVI750001
17054	FTVI700001	18395	FDVX930000	33047	ADVX810004
17055	FTVX700000	26024	MBVI870000	33047	ADVX810005
17060	FTVI826000	26032	MBVX870000	33048	ADVX810004
17061	FTVX826000	26045	MBVI870002	33048	ADVX810005
17062	FTVI930000	26046	MBVX870003	33049	ADVX795000
17063	FTVX930000	26047	MBVX870002	33050	ADVX810002
17064	FTVX930000	26048	MBVI899000	331033	ADVI795003
17081	FTVX930000	26048-F	MBVI899000	331034	ADVX795003
17094	FTVI700000	2605	MBVI909000	331035	ADVI795005
171003	FTVX820003	261032	MBVI899002	331036	ADVX795005
171004	FTVX820002	261033	MBVX899002	331037	ADVI765004
171005	FTVI820003	261044	MBVX899000	331038	ADVX765004
171006	FTVI820002	26105	MBVI955001	331055	ADVI783000
171013	FTVI820001	26106	MBVX955001	331056	ADVX783000
171014	FTVX820001	26107	MBVI829000	33125	ADVI810002
171015	FTVI930001	26108	MBVX829000	33308	ADVI825000
171016	FTVX930001	26109	MBVI885000	33309	ADVX825000

TRW NUMBER	EP NUMBER	TRW NUMBER	EP NUMBER	TRW NUMBER	EP NUMBER
33313	ADVI810007	511020	RNVX690000	537746	PGVI830001
33380	ADVX795001	51142	RNVX880000	537747	PGVX830001
33394	ADVX810001	512190	RNVX820000	537840	PGVI700000
33403	ADVI825001	51315	RNVI758000	537841	PGVI720000
33410	ADVI810006	51318	RNVI880001	537844	PGVX700000
33413	ADVI810000	515120	RNVI860000	537845	PGVX720000
33416	ADVX825001	515320	RNVX860000	537851	PGVX830002
33438	ADVX810000	517419	RNVI870000	537853	PGVI830002
341001	OPVI805000	517482	RNVX870000	538359	PGVI830000
341002	OPVX805000	517609	RNVI820000	560017	FTVI820002
39100	ADVI810001	517646	RNVX758000	560018	FTVX820002
39114	ADVX750000	517682	RNVX910000	560019	FTVI820004
39123	ADVI795000	517700	RNVI880000	56008	ARVI870000
39136	ADVI810004	517818-F	RNVI800001	56009	ARVX870000
39143	ADVI795000	517939	RNVI910000	56014	ARVI930001
39183	ADVI765005	517963	RNVX800000	56104	ARVI880000
39255	ADVI750001	531003	PGVI850000	56105	ARVX880000
39268	ADVI750000	531004	PGVX850000	56113	ARVX840000
39300	ADVX810010	531007	PGVI750001	56126	ARVX930001
39335	ADVI825001	531010	PGVI860004	701009	NSVX760000
39360	ADVI750002	531011	PGVX860004	701011	NSVI760000
39363	ADVX750002	531012	PGVI720001	711001	SZVI750000
39367	ADVI765003	531017	PGVI850003	711002	SZVX750000
39372	ADVI810010	531018	PGVX850003	711007	TYVI690000
39395	ADVI795005	531019	PGVI860006	711008	TYVX690000
39396	ADVI795005	531020	PGVX860006	711011	TYVI810001
39423	ADVI795001	531021	PGVI850002	711012	TYVX810001
39464	ADVI765002	531022	PGVX850002	711013	TYVI860003
39467	ADVX765001	531023	PGVI830003	711014	TYVX860003
39474	ADVX795005	531026	PGVX830003	711017	TYVI790000
39486	ADVI795002	531027	PGVI850001	711018	TYVX790000
39487	ADVX795002	531028	PGVX850001	711024	TYVX920001
39502	ADVI795004	531029	RNVI795001	711025	TYVI860004
39503	ADVX795004	531030	RNVX795001	711026	TYVX860004
39515	ADVX671000	531031	RNVI795001	721001	HDVI840000
39522	ADVI765000	531032	RNVX795001	721002	HDVX840000
39523	ADVX765000	533033	PGVX860003	761003	MIVI850001
39530	ADVI765001	537006	PGVI860003	761004	MIVX850001
39542	ADVI671000	537016	PGVX830000	771001	DWVI790000
4077	VMVI920000	537016	PGVX830001	771002	DWVX790000
47130	RNVX827003	537131	PGVI860005	77107	VMVX920000
47145	RNVI827003	537132	PGVX860005	7837	FDVI908000
4717	VOVI889000	537141	PGVI860007	7885	FDVX908000
4718	VOVX889000	537148	PGVX860007	801003	RVVI800000
4729	VOVI960000	537174	PGVX785000	801004	RVVX800000
4730	VOVX960000	537209	PGVI785000	801005	RVVI844502
510201	RNVI827000	537450	PGVX830001	801006	RVVX844502
510202	RNVX827000	537503	PGVI920000	80480	NSVX860001
510203	RNVI800000	537505	PGVI750000	81021	NSVX860000
511011	RNVI827002	537506	PGVX750000	81-11110	01-2377
511012	RNVX827002	537554	PGVX920000	81-11112	01-2491
511013	RNVI800002	537555	PGVX860002	81-11114	01-2534
511014	RNVX800002	537575	PGVI860002	81-1147	01-0058
511015	RNVI827001	537627	CTVI770000	81-1158	01-1871
511016	RNVX827001	537628	CTVX770000	81-1159	01-1873
511017	RNVI795000	537686	PGVI860000	81-1160	01-1874
511018	RNVX795000	537687	PGVX860000	81-1161	01-1875
511019	RNVI690000	537708	PGVI830001	81-1162	01-1913

TRW NUMBER	EP NUMBER	TRW NUMBER	EP NUMBER	TRW NUMBER	EP NUMBER
81-1631	01-1314	81-5115	01-0394	S3854	NSVX850001
81-1647	01-1449	81-5200	01-2196	S3856	NSVX850000
81-1658	01-1646	81-52100	01-1367	S3881	MZVX780001
81-1666	01-2071	81-5303	01-0943	S4275	DHVX760000
81-1670	01-2074	81-5603	01-0009	S4276	HDVX750000
81-1674	01-2129	81-5604	01-0013	S4292	TYVX920000
81-1676	01-2131	81-5606	01-0473	S4296	TYVX740000
81-1682	01-2099	81-5609	01-2082	S4298	TYVX950000
81-1685	01-2101	81-5717	01-1359	S4300	TYVX860002
81-1762	01-0174	81-6420	01-1423	S4304	NSVX710000
81-2020	01-1753	AS3378	OPVX790001	S4308	NSVX760000
81-2246	01-1518	AS3446	TYVX860000	S4312	NSVX960000
81-2536	01-2049	AS3894	TYVX860001	S4322	MZVX830001
81-2602	01-0108	G0942	01-1358	S4325	MIVX710000
81-2604	01-0110	G1011	01-1540	S4327	SBVX920000
81-2606	01-2064	G1039	01-2057	S4334	SBVX879000
81-2609	01-1309	G1049	01-1905	S4340	NSVX845000
81-26103	01-2127	G1055	01-1448	V1485	HDVI750001
81-26106	01-2278	G1062	01-2143	V3249	MZVI860000
81-26109	01-2281	G1092	01-2056	V3333	OPVI790001
81-26118	01-2284	G1098	01-2059	V3338	MIVI850000
81-26121	01-2293	G1103	01-2179	V3436	HDVI750000
81-26151	01-2125	G1147	01-2349	V3445	TYVI860000
81-26163	01-2425	G1182	01-2345	V3447	TYVI810000
81-26166	01-2431	G1183	01-2346	V3639	MZVI860002
81-26169	01-2520	G1185	01-2546	V3663	SZVI665000
81-26172	01-2453	G1190	01-2206	V3825	IZVI930000
81-26173	01-2454	G1191	01-2455	V3827	MZVI780000
81-26175	01-2522	G1209	01-2144	V3829	MZVI860001
81-2631	01-2067	G1214	01-1539	V3841	MIVI911002
81-2634	01-2069	G1307	01-2177	V3846	NSVI860000
81-2634	01-2069	G1308	01-2178	V3853	NSVI850001
81-2659	01-0527	G5096	01-2058	V3855	NSVI850000
81-2667	01-0524	G5101	01-2319	V3880	MZVI780001
81-2682	01-1311	G5102	01-2320	V3893	TYVI860001
81-2685	01-1684	G5107	01-5754	V4274	DHVI760000
81-2688	01-1688	G5109	01-2517	V4291	TYVI920000
81-2696	01-2061	G5112	01-2172	V4295	TYVI740000
81-3036	01-0530	G5115	01-2561	V4297	TYVI950000
81-3042	01-2186	G5116	01-2571	V4299	TYVI860002
81-3310	01-1227	G5117	01-2572	V4303	NSVI710000
81-33100	01-2304	G5118	01-2577	V4307	NSVI760000
81-33103	01-2470	G5121	01-2580	V4311	NSVI960000
81-33107	01-2462	G5123	01-2583	V4321	MZVI830001
81-33109	01-2464	G5123	01-2583	V4323	MIVI710001
81-3316	01-0494	S3250	MZVX860000	V4324	MIVI710000
81-3319	01-1498	S3337	MIVX850000	V4333	SBVI879000
81-3321	01-2208	S3444	TYVX810000	V4339	NSVI845000
81-3907	01-1406	S3640	MZVX860002		
81-3940	01-1478	S3664	SZVX665000		
81-3947	01-1482	S3817	HDVX750001		
81-4716	01-1317	S3826	IZVX930000		
81-4717	01-1318	S3828	MZVX780000		
81-4719	01-1563	S3830	MZVX860001		
81-4720	01-1912	S3840	MIVX911002		

PART NUMBER	MANUFACTURER	PAGE NUMBERS
ADVI671000	V.A.G.	180, 188. 214
ADVI671001	V.A.G.	180, 188, 214
ADVI710000	V.A.G.	8, 180, 188, 214
ADVI720000	V.A.G.	188
ADVI750000	V.A.G.	180, 214
ADVI750001	V.A.G.	180, 214
ADVI750002	V.A.G.	180, 214
ADVI750003	V.A.G.	214
ADVI750004	V.A.G.	180, 214
ADVI755000	V.A.G.	180, 188
ADVI765000	V.A.G.	8, 180, 188, 214, 216
ADVI765001	V.A.G.	180, 188, 216
ADVI765002	V.A.G.	216
ADVI765003	V.A.G.	180, 216
ADVI765004	V.A.G.	180, 216
ADVI765005	V.A.G.	14, 222
ADVI765006	V.A.G.	180, 216
ADVI765007	V.A.G.	188, 216
ADVI765008	V.A.G.	14, 222
ADVI783000	V.A.G.	14, 222
ADVI783001	V.A.G.	14, 192, 222
ADVI795000	V.A.G.	8, 14, 184 , 192 , 222
ADVI795001	V.A.G.	14, 68, 184, 222, 230
ADVI795002	V.A.G.	14, 68, 184, 192, 224
ADVI795003	V.A.G.	16, 68, 184, 192, 224
ADVI795004	V.A.G.	184, 192, 224
ADVI795005	V.A.G.	184, 192, 224
ADVI795006	V.A.G.	16, 184, 192, 224
ADVI795007	V.A.G.	16, 186, 192, 226
ADVI810000	V.A.G.	10, 12, 182, 188, 216
ADVI810001	V.A.G.	8, 218
ADVI810002	V.A.G.	8, 182, 218
ADVI810003	V.A.G.	8, 218
ADVI810004	V.A.G.	182, 218
ADVI810005	V.A.G.	10, 182, 218
ADVI810006	V.A.G.	220
ADVI810007	V.A.G.	12, 218
ADVI810009	V.A.G.	16, 226
ADVI810010	V.A.G.	64, 218
ADVI810011	V.A.G.	12, 182, 188
ADVI810012	V.A.G.	16, 186, 220, 226
ADVI810014	V.A.G.	16, 28, 86, 186, 192, 226
ADVI810015	V.A.G.	16, 186, 192, 226
ADVI810016	V.A.G.	12, 220
ADVI810017	V.A.G.	12, 220
ADVI810018	V.A.G.	12
ADVI825000	V.A.G.	12, 182, 220
ADVI825001	V.A.G.	12, 182, 188, 220
ADVI825002	V.A.G.	12, 182, 190, 220
ADVI830000	V.A.G.	16, 226
ADVI840000	V.A.G.	
ADVI840001	V.A.G.	
ADVI930000	V.A.G.	226
ADVX671000	V.A.G.	180, 188, 214
ADVX671001	V.A.G.	180, 188, 214
ADVX710000	V.A.G.	8, 180, 188, 214
ADVX720000	V.A.G.	188
ADVX750000	V.A.G.	180, 214
ADVX750002	V.A.G.	180, 214
ADVX755000	V.A.G.	180, 188
ADVX765000	V.A.G.	8, 180, 188, 214, 216
ADVX765001	V.A.G.	180, 188, 216

PART NUMBER	MANUFACTURER	PAGE NUMBERS
ADVX765004	V.A.G.	180, 216
ADVX765006	V.A.G.	180, 188, 216
ADVX765008	V.A.G.	14, 222
ADVX783000	V.A.G.	14, 222
ADVX783001	V.A.G.	14, 182, 222
ADVX795000	V.A.G.	14, 184, 222
ADVX795001	V.A.G.	14, 68, 184, 222, 230
ADVX795002	V.A.G.	14, 68, 182, 192, 224
ADVX795003	V.A.G.	16, 68, 184, 192, 224
ADVX795004	V.A.G.	184, 192, 224
ADVX795005	V.A.G.	168, 172, 192, 200
ADVX795006	V.A.G.	14, 192, 200
ADVX795007	V.A.G.	16, 186, 192, 226
ADVX810000	V.A.G.	12, 182, 183, 216
ADVX810001	V.A.G.	10, 182, 188, 216
ADVX810002	V.A.G.	8, 182, 218
ADVX810003	V.A.G.	8, 218
ADVX810004	V.A.G.	8, 10, 12, 182, 218
ADVX810005	V.A.G.	10, 218
ADVX810009	V.A.G.	16, 226
ADVX810010	V.A.G.	64, 218
ADVX810011	V.A.G.	12, 182, 188
ADVX810012	V.A.G.	16, 186, 220, 226
ADVX810014	V.A.G.	16, 28, 86, 186, 192, 226
ADVX810015	V.A.G.	16, 186, 192, 226
ADVX810016	V.A.G.	12,220
ADVX810017	V.A.G.	12, 220
ADVX825000	V.A.G.	12, 182, 220
ADVX825001	V.A.G.	12, 182, 188, 220
ADVX825002	V.A.G.	12, 182, 190, 220
ADVX830000A	V.A.G.	16, 226
ADVX840000	V.A.G.	
ADVX840001	V.A.G.	
ADVX930000	V.A.G.	226
ARVI720002	ALFA ROMEO/FIAT LANCIA	6, 52, 96
ARVI820000	ALFA ROMEO/FIAT LANCIA	6, 54, 98, 140, 170
ARVI820001	ALFA ROMEO/FIAT LANCIA	6, 54, 96, 140
ARVI820002	ALFA ROMEO/FIAT LANCIA	6, 54, 96
ARVI840000	ALFA ROMEO/FIAT LANCIA	2
ARVI856000	ALFA ROMEO/FIAT LANCIA	4
ARVI860000	ALFA ROMEO/FIAT LANCIA	4
ARVI870000	ALFA ROMEO/FIAT LANCIA	2
ARVI880000	ALFA ROMEO/FIAT LANCIA	4
ARVI930000	ALFA ROMEO/FIAT LANCIA	4
ARVI930001	ALFA ROMEO/FIAT LANCIA	4, 94
ARVX820000	ALFA ROMEO/FIAT LANCIA	6, 54, 98, 140, 176
ARVX820001	ALFA ROMEO/FIAT LANCIA	6, 52, 54, 96, 140
ARVX820002	ALFA ROMEO/FIAT LANCIA	6, 54, 96
ARVX840000	ALFA ROMEO/FIAT LANCIA	2
ARVX856000	ALFA ROMEO/FIAT LANCIA	4
ARVX860000	ALFA ROMEO/FIAT LANCIA	4
ARVX870000	ALFA ROMEO/FIAT LANCIA	2
ARVX880000	ALFA ROMEO/FIAT LANCIA	4
ARVX930000	ALFA ROMEO/FIAT LANCIA	4
ARVX930001	ALFA ROMEO/FIAT LANCIA	4, 94
BMVI770000	B.M.W.	20, 26
BMVI770001	B.M.W.	20, 30, 146
BMVI800000	B.M.W.	20
BMVI800001	B.M.W.	20
BMVI800002	B.M.W.	24, 140, 172
BMVI800003	B.M.W.	20
BMVI800004	B.M.W.	24

PART NUMBER	MANUFACTURER	PAGE NUMBERS
BMVI840000	B.M.W.	20
BMVI840001	B.M.W.	20
BMVI840002	B.M.W.	20
BMVI840003	B.M.W.	22
BMVI840004	B.M.W.	22
BMVI840006	B.M.W.	22
BMVI840007	B.M.W.	24
BMVI840008	B.M.W.	24
BMVI850005	B.M.W.	22
BMVI850006	B.M.W.	22
BMVI860000	B.M.W.	22
BMVI920000	B.M.W.	22 , 170
BMVI920001	B.M.W.	22
BMVIX840005	B.M.W.	24, 172
BMVX770000	B.M.W.	20, 26
BMVX770001	B.M.W.	20, 30, 146
BMVX800000	B.M.W.	20
BMVX800001	B.M.W.	20
BMVX800002	B.M.W.	24, 140, 172
BMVX800003	B.M.W.	20
BMVX800004	B.M.W.	24
BMVX840000	B.M.W.	20
BMVX840001	B.M.W.	20
BMVX840002	B.M.W.	20
BMVX840003	B.M.W.	22
BMVX840004	B.M.W.	22
BMVX840006	B.M.W.	22
BMVX840008	B.M.W.	24
BMVX850005	B.M.W.	22
BMVX850006	B.M.W.	22
BMVX860000	B.M.W.	22
BMVX920000	B.M.W.	22, 170
BMVX920001	B.M.W.	22
CHVI875000	CHRYSLER/JEEP	26
CHVI875001	CHRYSLER/JEEP	26
CHVI920000	CHRYSLER/JEEP	28, 86
CHVI930000	CHRYSLER/JEEP	26
CHVX875000	CHRYSLER/JEEP	26
CHVX875001	CHRYSLER/JEEP	26
CHVX920000	CHRYSLER/JEEP	28, 86
CHVX930000	CHRYSLER/JEEP	26
CMVI102000	CUMMINS	40
CMVX102000	CUMMINS	40
CMVX139700	CUMMINS	40
CTVI737000	P.S.A.	36, 202
CTVI750000	P.S.A.	36, 152
CTVI750001	P.S.A.	36, 52, 68, 108, 152, 206, 230
CTVI750002	P.S.A.	152
CTVI750003	P.S.A.	36, 68, 152, 230
CTVI770000	P.S.A.	36, 130, 152
CTVX737000	P.S.A.	36, 202
CTVX750000	P.S.A.	36
CTVX750001	P.S.A.	36, 52, 68, 108, 152, 206, 230
CTVX750002	P.S.A.	152
CTVX750003	P.S.A.	36, 152, 230
CTVX770000	P.S.A.	34, 120, 140
DHVI666000	DAIHATSU	44
DHVI720000	DAIHATSU	44
DHVI720001	DAIHATSU	44
DHVI760000	DAIHATSU	44
DHVX666000	DAIHATSU	44

PART NUMBER	MANUFACTURER	PAGE NUMBERS
DHVX720000	DAIHATSU	44
DHVX760000	DAIHATSU	44
DWVI685000	DAEWOO/GM	42
DWVI765000	DAEWOO/GM	42
DWVI779000	DAEWOO/GM	42
DWVI779001	DAEWOO/GM	42
DWVI790000	DAEWOO/GM	42
DWVI848000	DAEWOO/GM	42
DWVI860000	DAEWOO/GM	42, 138
DWVX685000	DAEWOO/GM	42
DWVX765000	DAEWOO/GM	42
DWVX779000	DAEWOO/GM	42
DWVX779001	DAEWOO/GM	42
DWVX790000	DAEWOO/GM	42
DWVX848000	DAEWOO/GM	42
DWVX860000	DAEWOO/GM	42, 138
FDVI687000	FORD	60
FDVI720000	FORD	60
FDVI720001	FORD	60
FDVI720002	FORD	60, 102
FDVI739600	FORD	60
FDVI740000	FORD	60, 102
FDVI760000	FORD	60
FDVI760001	FORD	60
FDVI760002	FORD	60
FDVI760003	FORD	62
FDVI760004	FORD	62
FDVI760005	FORD	62, 102, 228
FDVI760006	FORD	62, 102
FDVI760007	FORD	62
FDVI760008	FORD	62
FDVI772400A	FORD	62
FDVI790000	FORD	62
FDVI800000	FORD	62
FDVI800001	FORD	64
FDVI800002A	FORD	60, 64
FDVI806000	FORD	64
FDVI824000	FORD	64
FDVI825000	FORD	68
FDVI825001	FORD	68, 70
FDVI830000	FORD	64, 228
FDVI830001	FORD	64, 228
FDVI848000	FORD	64
FDVI848001	FORD	66
FDVX848002	FORD	66
FDVI860000	FORD	66
FDVI860001	FORD	66
FDVI860002	FORD	56, 70
FDVI875000	FORD	66, 106, 228
FDVI899000	FORD	70
FDVI908000A	FORD	66
FDVI908001A	FORD	66
FDVI930000	FORD	66
FDVI936700	FORD	70
FDVX687000	FORD	60, 102
FDVX720000	FORD	60
FDVX720001	FORD	60
FDVX720002	FORD	60, 102
FDVX739600	FORD	60
FDVX740002A	FORD	60
FDVX760000	FORD	60
FDVX760001	FORD	60

PART NUMBER	MANUFACTURER	PAGE NUMBERS
FDVX760002	FORD	60
FDVX760003	FORD	62
FDVX760005	FORD	62, 102, 228
FDVX760007	FORD	62
FDVX760008	FORD	62
FDVX772400A	FORD	62
FDVX790000	FORD	62
FDVX800000	FORD	62
FDVX800001	FORD	64
FDVX800002A	FORD	64
FDVX806000	FORD	64
FDVX824000	FORD	64
FDVX825000	FORD	68
FDVX825001	FORD	68
FDVX825002	FORD	70
FDVX830000	FORD	64, 228
FDVX830001	FORD	64
FDVX848000	FORD	64
FDVX848001	FORD	66
FDVX848002	FORD	66
FDVX860000	FORD	66
FDVX860001	FORD	66
FDVX860002	FORD	56, 70
FDVX875000	FORD	66, 106, 228
FDVX899000	FORD	70
FDVX908000A	FORD	66
FDVX908001A	FORD	66
FDVX908002A	FORD	66
FDVX930000	FORD	66
FDVX936700	FORD	70
FTVI700000	ALFA ROMEO/FIAT LANCIA	46, 92
FTVI700001	ALFA ROMEO/FIAT LANCIA	46, 92
FTVI700002	ALFA ROMEO/FIAT LANCIA	46
FTVI708000	ALFA ROMEO/FIAT LANCIA	46, 92
FTVI708001	ALFA ROMEO/FIAT LANCIA	46
FTVI708002	ALFA ROMEO/FIAT LANCIA	48, 92
FTVI708003	ALFA ROMEO/FIAT LANCIA	48, 92
FTVI720001A	ALFA ROMEO/FIAT LANCIA	2, 48
FTVI730000	ALFA ROMEO/FIAT LANCIA	52, 68, 96, 140, 202
FTVI730001	ALFA ROMEO/FIAT LANCIA	6, 50, 68, 96, 140, 202
FTVI820000	ALFA ROMEO/FIAT LANCIA	48, 92
FTVI820001	ALFA ROMEO/FIAT LANCIA	52, 96
FTVI820002	ALFA ROMEO/FIAT LANCIA	4, 48, 92
FTVI820003	ALFA ROMEO/FIAT LANCIA	2, 50, 92
FTVI820004	ALFA ROMEO/FIAT LANCIA	6, 52, 96, 140, 176, 202
FTVI820005	ALFA ROMEO/FIAT LANCIA	48
FTVI826000	ALFA ROMEO/FIAT LANCIA	6, 54, 96
FTVI840000	ALFA ROMEO/FIAT LANCIA	2, 50, 94
FTVI864000	ALFA ROMEO/FIAT LANCIA	50, 94
FTVI880000	ALFA ROMEO/FIAT LANCIA	56
FTVI930000	ALFA ROMEO/FIAT LANCIA	38, 56, 98, 142, 154, 184
FTVI930001	ALFA ROMEO/FIAT LANCIA	56
FTVI930002	ALFA ROMEO/FIAT LANCIA	38, 154
FTVI958000	ALFA ROMEO/FIAT LANCIA	56, 154
FTVX700000	ALFA ROMEO/FIAT LANCIA	46, 92
FTVX700002	ALFA ROMEO/FIAT LANCIA	46
FTVX708000	ALFA ROMEO/FIAT LANCIA	46, 90
FTVX708001	ALFA ROMEO/FIAT LANCIA	46
FTVX708002	ALFA ROMEO/FIAT LANCIA	48, 92
FTVX708003	ALFA ROMEO/FIAT LANCIA	48, 92
FTVX720001A	ALFA ROMEO/FIAT LANCIA	2, 48
FTVX720002	ALFA ROMEO/FIAT LANCIA	2, 48
FTVX730000	ALFA ROMEO/FIAT LANCIA	50, 68, 96, 140, 202

PART NUMBER	MANUFACTURER	PAGE NUMBERS
FTVX730001	ALFA ROMEO/FIAT LANCIA	6, 50, 96, 140, 202
FTVX820000	ALFA ROMEO/FIAT LANCIA	48, 92
FTVX820001	ALFA ROMEO/FIAT LANCIA	52, 96
FTVX820002	ALFA ROMEO/FIAT LANCIA	4, 48, 92
FTVX820003	ALFA ROMEO/FIAT LANCIA	2, 50, 92
FTVX820004	ALFA ROMEO/FIAT LANCIA	6, 52, 96, 140, 176, 202
FTVX820005	ALFA ROMEO/FIAT LANCIA	48
FTVX826000	ALFA ROMEO/FIAT LANCIA	6, 54, 96
FTVX840000	ALFA ROMEO/FIAT LANCIA	2, 50, 94
FTVX864000	ALFA ROMEO/FIAT LANCIA	50, 94
FTVX880000	ALFA ROMEO/FIAT LANCIA	56
FTVX930000	ALFA ROMEO/FIAT LANCIA	56, 98, 164
FTVX930001	ALFA ROMEO/FIAT LANCIA	56
FTVX930002	ALFA ROMEO/FIAT LANCIA	38, 56, 142, 154, 164
FTVX930004	ALFA ROMEO/FIAT LANCIA	150
FTVX958000	ALFA ROMEO/FIAT LANCIA	56, 154
HDVI730000	HONDA	72
HDVI750000	HONDA	72, 166
HDVI750001	HONDA	72
HDVI750002	HONDA	72
HDVI750003	HONDA	72
HDVI750004	HONDA	72
HDVI750005	HONDA	72
HDVI840000	HONDA	72
HDVI850000	HONDA	72
HDVI850001	HONDA	72
HDVI850002	HONDA	72
HDVI860000	HONDA	72
HDVI870000	HONDA	72
HDVI870001	HONDA	72, 170
HDVX730000	HONDA	72
HDVX750000	HONDA	72
HDVX750001	HONDA	72, 166
HDVX750002	HONDA	72
HDVX750003	HONDA	72
HDVX750004	HONDA	72
HDVX840000	HONDA	72
HDVX850000	HONDA	72
HDVX850001	HONDA	72
HDVX850002	HONDA	72
HDVX860000	HONDA	72
HDVX870000	HONDA	72
HDVX870001	HONDA	72, 170
HYVI660000	HYUNDAI	76
HYVI710000	HYUNDAI	76
HYVI715000	HYUNDAI	76
HYVI750000	HYUNDAI	80, 90
HYVI765000	HYUNDAI	76
HYVI770000	HYUNDAI	76, 88
HYVI774000	HYUNDAI	76, 88
HYVI820000	HYUNDAI	76
HYVI820001	HYUNDAI	76
HYVI820002	HYUNDAI	78, 88
HYVI830000	HYUNDAI	80, 90
HYVI911000	HYUNDAI	80
HYVX660000	HYUNDAI	76
HYVX710000	HYUNDAI	76
HYVX715000	HYUNDAI	76
HYVX715001	HYUNDAI	76
HYVX750000	HYUNDAI	80, 90
HYVX765000	HYUNDAI	76
HYVX770000	HYUNDAI	76, 88
HYVX774000	HYUNDAI	76, 88

PART NUMBER	MANUFACTURER	PAGE NUMBERS
HYVX820000	HYUNDAI	76
HYVX820001	HYUNDAI	76
HYVX820002	HYUNDAI	78, 88
HYVX830000	HYUNDAI	80, 90
HYVX911000	HYUNDAI	80
IZVI930000	ISUZU/GM	82, 142
IZVI954000	ISUZU/GM	82, 142
IZVI954001	ISUZU/GM	82, 142
IZVX930000	ISUZU/GM	82, 142
IZVX954001	ISUZU/GM	82, 142
JPVI984000	CHRYSLER/JEEP	86
JPVX984000	CHRYSLER/JEEP	86
JRVI830000	JAGUAR	84
JRVX830000	JAGUAR	84
KAVI680000	KIA	76, 88
KAVI755000	KIA	88
KAVI755001	KIA	88
KAVI780000	KIA	88
KAVI810000	KIA	88
KAVI860000	KIA	90
KAVI860001	KIA	90
KAVI910000	KIA	80, 90
KAVI971000	KIA	80, 90
KAVX680000	KIA	76, 88
KAVX755000	KIA	88
KAVX755001	KIA	88
KAVX780000	KIA	88
KAVX810000	KIA	88
KAVX860000	KIA	90
KAVX860001	KIA	90
KAVX910000	KIA	80, 90
KAVX971000	KIA	80, 90
LRVI844500	ROVER GROUP	172
LRVI904700	ROVER GROUP	170
LRVI904701	ROVER GROUP	172
LRVI904702	ROVER GROUP	172
LRVI904703	ROVER GROUP	172
LRVI904704	ROVER GROUP	170
LRVI904705	ROVER GROUP	172
LRVX844500	ROVER GROUP	172
LRVX904700	ROVER GROUP	170
LRVX904701	ROVER GROUP	172
LRVX904702	ROVER GROUP	172
LRVX904703	ROVER GROUP	172
LRVX904704	ROVER GROUP	170
LXVI750000	LEXUS/TOYOTA	184
LXVX750000	LEXUS/TOYOTA	184
LYVI130000	LEYLAND	100
LYVX130000	LEYLAND	100
MBVI102000	MERCEDES-BENZ	118
MBVI102001	MERCEDES-BENZ	118
MBVI800000	MERCEDES-BENZ	110
MBVI800001	MERCEDES-BENZ	116
MBVI800002	MERCEDES-BENZ	86, 116, 124
MBVI820000	MERCEDES-BENZ	110
MBVI820001	MERCEDES-BENZ	110
MBVI829000	MERCEDES-BENZ	110
MBVI840000	MERCEDES-BENZ	110
MBVI853000	MERCEDES-BENZ	110
MBVI853001	MERCEDES-BENZ	110
MBVI870000	MERCEDES-BENZ	116, 196
MBVI870001	MERCEDES-BENZ	116
MBVI870002	MERCEDES-BENZ	116

PART NUMBER	MANUFACTURER	PAGE NUMBERS
MBVI880000	MERCEDES-BENZ	28, 86, 116
MBVI880001	MERCEDES-BENZ	118
MBVI880002	MERCEDES-BENZ	110
MBVI885000	MERCEDES-BENZ	110
MBVI890000	MERCEDES-BENZ	112
MBVI899000	MERCEDES-BENZ	112, 196, 220
MBVI899001	MERCEDES-BENZ	112
MBVI899002	MERCEDES-BENZ	112
MBVI899003	MERCEDES-BENZ	112
MBVI909000	MERCEDES-BENZ	118
MBVI955000	MERCEDES-BENZ	114
MBVI955001	MERCEDES-BENZ	114
MBVX102000	MERCEDES-BENZ	118
MBVX800000	MERCEDES-BENZ	110
MBVX800001	MERCEDES-BENZ	116
MBVX800002	MERCEDES-BENZ	86, 116, 124
MBVX820000	MERCEDES-BENZ	110
MBVX820001	MERCEDES-BENZ	110
MBVX829000	MERCEDES-BENZ	110
MBVX840000	MERCEDES-BENZ	110
MBVX840001	MERCEDES-BENZ	110
MBVX853000	MERCEDES-BENZ	110
MBVX853001	MERCEDES-BENZ	110
MBVX870000	MERCEDES-BENZ	116, 196
MBVX870001	MERCEDES-BENZ	116
MBVX870002	MERCEDES-BENZ	116
MBVX870003	MERCEDES-BENZ	116
MBVX880000	MERCEDES-BENZ	28, 86, 116
MBVX880001	MERCEDES-BENZ	118
MBVX880002	MERCEDES-BENZ	110
MBVX885000	MERCEDES-BENZ	110
MBVX890000	MERCEDES-BENZ	112, 114
MBVX899000	MERCEDES-BENZ	112, 196, 220
MBVX899001	MERCEDES-BENZ	112
MBVX899002	MERCEDES-BENZ	112
MBVX899003	MERCEDES-BENZ	112
MBVX899004	MERCEDES-BENZ	112
MBVX909000	MERCEDES-BENZ	118
MBVX955001	MERCEDES-BENZ	114
MIVI710000	MITSUBISHI	120
MIVI710001	MITSUBISHI	120
MIVI710002	MITSUBISHI	120
MIVI750000	MITSUBISHI	120
MIVI760000	MITSUBISHI	120
MIVI810000	MITSUBISHI	120
MIVI810001	MITSUBISHI	120
MIVI827000	MITSUBISHI	124
MIVI850000	MITSUBISHI	120
MIVI850001	MITSUBISHI	78, 88, 122
MIVI850002	MITSUBISHI	26, 122
MIVI850003	MITSUBISHI	122
MIVI911000	MITSUBISHI	90, 122
MIVI911001	MITSUBISHI	122
MIVI911002	MITSUBISHI	80, 124
MIVI911003	MITSUBISHI	80, 90, 124
MIVI911004	MITSUBISHI	124
MIVI950000	MITSUBISHI	124
MIVI985000	MITSUBISHI	124
MIVX710000	MITSUBISHI	120
MIVX710002	MITSUBISHI	120
MIVX750000	MITSUBISHI	120
MIVX760000	MITSUBISHI	120
MIVX810000	MITSUBISHI	120

PART NUMBER	MANUFACTURER	PAGE NUMBERS
MIVX810001	MITSUBISHI	120
MIVX827000	MITSUBISHI	124
MIVX850000	MITSUBISHI	120
MIVX850001	MITSUBISHI	78, 88, 122
MIVX850002	MITSUBISHI	26, 122
MIVX850003	MITSUBISHI	122
MIVX911000	MITSUBISHI	90, 122
MIVX911001	MITSUBISHI	122
MIVX911002	MITSUBISHI	80, 124
MIVX911003	MITSUBISHI	80, 90, 124
MIVX911004	MITSUBISHI	124
MIVX950000	MITSUBISHI	124
MIVX985000	MITSUBISHI	124
MZVI710000	MAZDA	102
MZVI720000	MAZDA	102
MZVI740000	MAZDA	102
MZVI750000	MAZDA	102
MZVI753000	MAZDA	102
MZVI780000	MAZDA	104
MZVI780001	MAZDA	104
MZVI780003	MAZDA	104
MZVI780004	MAZDA	104
MZVI780005	MAZDA	104
MZVI830000	MAZDA	58, 88, 104
MZVI830001	MAZDA	104
MZVI845000	MAZDA	58, 104
MZVI848000	MAZDA	106
MZVI860000	MAZDA	106
MZVI860001	MAZDA	106
MZVI860002	MAZDA	108, 202
MZVI860003	MAZDA	108
MZVI860004	MAZDA	108
MZVI860005	MAZDA	108
MZVI870000	MAZDA	106
MZVI890000	MAZDA	106
MZVI930000	MAZDA	70, 108
MZVI930001	MAZDA	70, 108
MZVX710000	MAZDA	102
MZVX720000	MAZDA	102
MZVX740000	MAZDA	102
MZVX750000	MAZDA	102
MZVX753000	MAZDA	102
MZVX780000	MAZDA	104
MZVX780001	MAZDA	104
MZVX780003	MAZDA	104
MZVX780004	MAZDA	104
MZVX780005	MAZDA	104
MZVX830000	MAZDA	58, 88, 104
MZVX830001	MAZDA	104
MZVX845000	MAZDA	58, 104
MZVX848000	MAZDA	106
MZVX860000	MAZDA	106
MZVX860001	MAZDA	106
MZVX860002	MAZDA	108, 202
MZVX860003	MAZDA	108
MZVX860005	MAZDA	108
MZVX870000	MAZDA	106
MZVX890000	MAZDA	106
MZVX930000	MAZDA	70, 108
MZVX930001	MAZDA	70, 108
NSVI710000	NISSAN	126
NSVI710001	NISSAN	126
NSVI736000	NISSAN	126

PART NUMBER	MANUFACTURER	PAGE NUMBERS
NSVI760000	NISSAN	126
NSVI760001	NISSAN	126
NSVI780000	NISSAN	128
NSVI800000	NISSAN	128
NSVI840000	NISSAN	128, 160
NSVI845000	NISSAN	130
NSVI850000	NISSAN	130
NSVI850001	NISSAN	128, 130
NSVI850002	NISSAN	128
NSVI860000	NISSAN	128
NSVI860002	NISSAN	128
NSVI860003	NISSAN	132
NSVI870000	NISSAN	132
NSVI890000	NISSAN	128
NSVI890001	NISSAN	128
NSVI960000	NISSAN	70, 132
NSVI960001	NISSAN	132, 142, 164
NSVX710000	NISSAN	126
NSVX710001	NISSAN	126
NSVX736000	NISSAN	126
NSVX760000	NISSAN	126
NSVX760002	NISSAN	126
NSVX780000	NISSAN	128
NSVX800000	NISSAN	128
NSVX840000	NISSAN	128, 160
NSVX845000	NISSAN	130
NSVX850000	NISSAN	130
NSVX850001	NISSAN	128, 130
NSVX860000	NISSAN	128
NSVX860001	NISSAN	128
NSVX860002	NISSAN	128
NSVX860003	NISSAN	132
NSVX870000	NISSAN	132
NSVX890000	NISSAN	128
NSVX890001	NISSAN	128
NSVX960000	NISSAN	70, 132
NSVX960001	NISSAN	132, 142, 134
OPVI720000	GM-OPEL/VAUXHALL	134
OPVI720001	GM-OPEL/VAUXHALL	134
OPVI725000	GM-OPEL/VAUXHALL	134
OPVI776000	GM-OPEL/VAUXHALL	134
OPVI790000	GM-OPEL/VAUXHALL	134
OPVI790001	GM-OPEL/VAUXHALL	82, 140
OPVI790002	GM-OPEL/VAUXHALL	74, 140
OPVI790003	GM-OPEL/VAUXHALL	42, 134
OPVI790004	GM-OPEL/VAUXHALL	134
OPVI790005	GM-OPEL/VAUXHALL	140
OPVI805000	GM-OPEL/VAUXHALL	136, 174
OPVI805001	GM-OPEL/VAUXHALL	136
OPVI805002	GM-OPEL/VAUXHALL	136
OPVI825000	GM-OPEL/VAUXHALL	140
OPVI830000	GM-OPEL/VAUXHALL	42, 142
OPVI840000	GM-OPEL/VAUXHALL	142, 176
OPVI860000	GM-OPEL/VAUXHALL	42, 138, 174
OPVI860001	GM-OPEL/VAUXHALL	138
OPVI860002	GM-OPEL/VAUXHALL	138, 174
OPVI860003	GM-OPEL/VAUXHALL	138
OPVI875000	GM-OPEL/VAUXHALL	142, 176
OPVI920000	GM-OPEL/VAUXHALL	142
OPVI970000	GM-OPEL/VAUXHALL	138
OPVX720000	GM-OPEL/VAUXHALL	134
OPVX720001	GM-OPEL/VAUXHALL	134
OPVX725000	GM-OPEL/VAUXHALL	134

PART NUMBER	MANUFACTURER	PAGE NUMBERS
OPVX776000	GM-OPEL/VAUXHALL	134
OPVX790000	GM-OPEL/VAUXHALL	134
OPVX790001	GM-OPEL/VAUXHALL	82, 140
OPVX790002	GM-OPEL/VAUXHALL	74, 140
OPVX790003	GM-OPEL/VAUXHALL	42, 134
OPVX790004	GM-OPEL/VAUXHALL	134
OPVX790005	GM-OPEL/VAUXHALL	140
OPVX805000	GM-OPEL/VAUXHALL	136, 174
OPVX805001	GM-OPEL/VAUXHALL	136
OPVX805002	GM-OPEL/VAUXHALL	136
OPVX825000	GM-OPEL/VAUXHALL	140
OPVX830000	GM-OPEL/VAUXHALL	42, 142
OPVX840000	GM-OPEL/VAUXHALL	142, 176
OPVX860000	GM-OPEL/VAUXHALL	42, 138, 174
OPVX860001	GM-OPEL/VAUXHALL	138
OPVX860002	GM-OPEL/VAUXHALL	138, 174
OPVX860003	GM-OPEL/VAUXHALL	138
OPVX875000	GM-OPEL/VAUXHALL	142, 176
OPVX920000	GM-OPEL/VAUXHALL	142
OPVX970000	GM-OPEL/VAUXHALL	138
PGVI700000	P.S.A. GROUP	30, 146
PGVI720000	P.S.A. GROUP	30, 146
PGVI720001	P.S.A. GROUP	30, 146
PGVI750000	P.S.A. GROUP	30, 146
PGVI750001	P.S.A. GROUP	30, 146
PGVI750002	P.S.A. GROUP	30, 146
PGVI770000	P.S.A. GROUP	36, 68, 108, 152, 210
PGVI785000	P.S.A. GROUP	30
PGVI785001	P.S.A. GROUP	30, 146
PGVI785002	P.S.A. GROUP	20, 32, 148
PGVI785003	P.S.A. GROUP	32, 148
PGVI810000	P.S.A. GROUP	152, 172
PGVI830000	P.S.A. GROUP	36, 152, 210
PGVI830001	P.S.A. GROUP	36, 42, 56, 152, 172, 202
PGVI830002	P.S.A. GROUP	32, 148
PGVI830003	P.S.A. GROUP	32, 148
PGVI850000	P.S.A. GROUP	38, 56, 152, 202
PGVI850001	P.S.A. GROUP	34, 148
PGVI850002	P.S.A. GROUP	38, 56, 68, 70, 98, 154, 230
PGVI850003	P.S.A. GROUP	38, 56, 98, 154, 202
PGVI850004	P.S.A. GROUP	38, 68, 154, 172
PGVI850005	P.S.A. GROUP	152
PGVI860000	P.S.A. GROUP	32, 148
PGVI860001	P.S.A. GROUP	32, 50, 94, 148
PGVI860002	P.S.A. GROUP	38, 98, 154
PGVI860003	P.S.A. GROUP	34, 50, 94, 148
PGVI860004	P.S.A. GROUP	34, 94, 150
PGVI860005	P.S.A. GROUP	150
PGVI860006	P.S.A. GROUP	34, 150
PGVI860007	P.S.A. GROUP	34, 148, 150
PGVI860008	P.S.A. GROUP	150
PGVI870000	P.S.A. GROUP	150
PGVI920000	P.S.A. GROUP	38, 154
PGVI920001	P.S.A. GROUP	38, 154
PGVX700000	P.S.A. GROUP	30, 146
PGVX720000	P.S.A. GROUP	30, 146
PGVX750000	P.S.A. GROUP	30, 146
PGVX750002	P.S.A. GROUP	30, 146
PGVX770000	P.S.A. GROUP	36, 68, 108, 152, 210
PGVX785000	P.S.A. GROUP	30, 146
PGVX785002	P.S.A. GROUP	20, 32, 148
PGVX810000	P.S.A. GROUP	152, 172
PGVX830001	P.S.A. GROUP	36, 56, 152, 172, 202, 210

PART NUMBER	MANUFACTURER	PAGE NUMBERS
PGVX830002	P.S.A. GROUP	32, 148, 150
PGVX830003	P.S.A. GROUP	32, 148
PGVX850000	P.S.A. GROUP	38, 56, 152, 202
PGVX850001	P.S.A. GROUP	34, 148
PGVX850002	P.S.A. GROUP	38, 56, 68, 70, 98, 154, 230
PGVX850003	P.S.A. GROUP	38, 56, 98, 154, 202
PGVX850004	P.S.A. GROUP	38, 68, 154, 172
PGVX860000	P.S.A. GROUP	32, 148
PGVX860001	P.S.A. GROUP	32, 50, 94, 148
PGVX860002	P.S.A. GROUP	38, 98, 154
PGVX860003	P.S.A. GROUP	34, 50, 94, 148
PGVX860004	P.S.A. GROUP	34, 94, 150
PGVX860005	P.S.A. GROUP	150
PGVX860006	P.S.A. GROUP	150
PGVX860007	P.S.A. GROUP	150
PGVX870000	P.S.A. GROUP	150
PGVX920000	P.S.A. GROUP	38, 154
PGVX920001	P.S.A. GROUP	38, 154
RNVI690000	RENAULT	126, 158
RNVI690001	RENAULT	126, 158
RNVI700000A	RENAULT	158
RNVI715000A	RENAULT	158
RNVI758000	RENAULT	158
RNVI760000	RENAULT	130, 162, 202
RNVI760001	RENAULT	158
RNVI795001	RENAULT	128, 158
RNVI800000	RENAULT	162
RNVI800001	RENAULT	162, 230
RNVI800002	RENAULT	124, 130, 140, 162, 230
RNVI800003	RENAULT	124
RNVI800004	RENAULT	162, 230
RNVI810000A	RENAULT	158
RNVI820000	RENAULT	158, 228
RNVI827000	RENAULT	160
RNVI827001	RENAULT	160
RNVI827002	RENAULT	160
RNVI827003	RENAULT	160, 228
RNVI827004	RENAULT	136, 160
RNVI827005	RENAULT	160
RNVI840000	RENAULT	130, 142, 162
RNVI860000	RENAULT	86, 162
RNVI870000	RENAULT	162
RNVI870001	RENAULT	132, 142, 164
RNVI880000	RENAULT	160
RNVI880001	RENAULT	160
RNVI910000	RENAULT	34, 160
RNVI955000	RENAULT	160
RNVX690000	RENAULT	126, 158
RNVX690001	RENAULT	126, 158
RNVX715000A	RENAULT	158
RNVX758000	RENAULT	158
RNVX760000	RENAULT	130, 162, 202
RNVX760001	RENAULT	158
RNVX795001	RENAULT	128, 158
RNVX800000	RENAULT	162, 230
RNVX800002	RENAULT	124, 130, 140, 162, 230
RNVX800003	RENAULT	124, 162, 230
RNVX800004	RENAULT	162
RNVX810000A	RENAULT	158
RNVX820000	RENAULT	158, 228
RNVX827000	RENAULT	160
RNVX827001	RENAULT	160
RNVX827002	RENAULT	160

PART NUMBER	MANUFACTURER	PAGE NUMBERS
RNVX827003	RENAULT	160, 228
RNVX827004	RENAULT	136, 160
RNVX827005	RENAULT	160
RNVX840000	RENAULT	130, 142, 162
RNVX860000	RENAULT	86, 162
RNVX870000	RENAULT	162
RNVX870001	RENAULT	132, 142, 164
RNVX880000	RENAULT	160
RNVX910000	RENAULT	34, 160
RNVX955000	RENAULT	160
RVVI706100A	ROVER GROUP	166
RVVI706101A	ROVER GROUP	166
RVVI706102A	ROVER GROUP	166
RVVI706103A	ROVER GROUP	166
RVVI750000	ROVER GROUP	168
RVVI750001	ROVER GROUP	168
RVVI800000	ROVER GROUP	168
RVVI844500	ROVER GROUP	168
RVVI844501	ROVER GROUP	168
RVVI844502	ROVER GROUP	74, 172
RVVI888000	ROVER GROUP	170
RVVX706100A	ROVER GROUP	166
RVVX706101A	ROVER GROUP	166
RVVX750000	ROVER GROUP	168
RVVX750001	ROVER GROUP	168
RVVX800000	ROVER GROUP	168
RVVX844500	ROVER GROUP	168
RVVX844501	ROVER GROUP	168
RVVX844502	ROVER GROUP	74, 172
RVVX888000	ROVER GROUP	170
SAVI900000	SAAB	174
SAVI900001	SAAB	174
SAVI900002A	SAAB	174
SAVX900000	SAAB	174
SAVX900002A	SAAB	174
SBVI879000	SUBARU	198
SBVI920000	SUBARU	198
SBVI920001	SUBARU	198
SBVI920002	SUBARU	198
SBVI920003	SUBARU	198
SBVI995000	SUBARU	198
SBVX879000	SUBARU	198
SBVX920000	SUBARU	198
SBVX920001	SUBARU	198
SBVX920002	SUBARU	198
SBVX920003	SUBARU	198
SBVX995000	SUBARU	198
SMVI635000	SMART CAR	194
SMVI650000A	SMART CAR	194
SMVI750000A	SMART CAR	194
SMVI830000A	SMART CAR	194
SMVX635000	SMART CAR	194
SMVX650000A	SMART CAR	194
SMVX750000A	SMART CAR	194
SMVX830000A	SMART CAR	194
SZVI665000	SUZUKI	198, 200
SZVI680000	SUZUKI	200
SZVI685000	SUZUKI	200
SZVI720000	SUZUKI	200
SZVI730000	SUZUKI	134. 200
SZVI740000	SUZUKI	200
SZVI750000	SUZUKI	198, 200
SZVI750001	SUZUKI	200

PART NUMBER	MANUFACTURER	PAGE NUMBERS
SZVI780000	SUZUKI	200
SZVI780001	SUZUKI	200
SZVI780002	SUZUKI	198, 200
SZVI840000	SUZUKI	200
SZVI860000	SUZUKI	202
SZVX665000	SUZUKI	198, 200
SZVX680000	SUZUKI	200
SZVX685000	SUZUKI	200
SZVX720000	SUZUKI	200
SZVX730000	SUZUKI	134, 200
SZVX740000	SUZUKI	200
SZVX750000	SUZUKI	200
SZVX750001	SUZUKI	200
SZVX780000	SUZUKI	200
SZVX780001	SUZUKI	200
SZVX780002	SUZUKI	198, 200
SZVX840000	SUZUKI	200
SZVX860000	SUZUKI	202
TYVI690000	TOYOTA	44, 204
TYVI710000	TOYOTA	24, 210
TYVI710002	TOYOTA	30, 146, 204
TYVI725000	TOYOTA	204
TYVI740000	TOYOTA	204
TYVI750000	TOYOTA	204
TYVI775000	TOYOTA	204
TYVI790000	TOYOTA	204
TYVI790001	TOYOTA	204
TYVI805000	TOYOTA	204
TYVI810000	TOYOTA	204
TYVI810001	TOYOTA	206
TYVI820000	TOYOTA	206
TYVI822000	TOYOTA	210
TYVI860000	TOYOTA	206
TYVI860001	TOYOTA	206
TYVI860002	TOYOTA	206
TYVI860003	TOYOTA	206
TYVI860004	TOYOTA	210
TYVI860005	TOYOTA	206
TYVI860007	TOYOTA	206
TYVI860008	TOYOTA	210
TYVI875000	TOYOTA	208
TYVI920000	TOYOTA	210
TYVI920002	TOYOTA	210
TYVI940000	TOYOTA	212
TYVI950000	TOYOTA	208
TYVI960000	TOYOTA	212
TYVX690000	TOYOTA	44, 204
TYVX710000	TOYOTA	24, 210
TYVX710002	TOYOTA	30, 146, 204
TYVX725000	TOYOTA	204
TYVX740000	TOYOTA	204
TYVX750000	TOYOTA	204
TYVX775000	TOYOTA	204
TYVX790000	TOYOTA	204
TYVX790001	TOYOTA	204
TYVX805000	TOYOTA	204
TYVX810000	TOYOTA	204
TYVX810001	TOYOTA	206
TYVX820000	TOYOTA	206
TYVX822000	TOYOTA	210
TYVX860000	TOYOTA	206
TYVX860001	TOYOTA	206
TYVX860002	TOYOTA	206

PART NUMBER	MANUFACTURER	PAGE NUMBERS
TYVX860003	TOYOTA	206
TYVX860004	TOYOTA	210
TYVX860005	TOYOTA	206
TYVX860006	TOYOTA	210
TYVX860007	TOYOTA	206
TYVX860008	TOYOTA	210
TYVX875000	TOYOTA	208
TYVX920000	TOYOTA	210
TYVX920001	TOYOTA	210
TYVX920002	TOYOTA	210
TYVX940000	TOYOTA	212
TYVX950000	TOYOTA	208
TYVX960000	TOYOTA	212
VMVI920000	V.M.	28, 70, 86, 172
VMVX920000	V.M.	28, 70, 86, 172
VOVI810000	VOLVO	228
VOVI810001	VOLVO	230
VOVI810002	VOLVO	228
VOVI810003	VOLVO	228
VOVI827003	VOLVO	228
VOVI889000	VOLVO	228
VOVI960000	VOLVO	228
VOVX810000	VOLVO	228
VOVX810001	VOLVO	230
VOVX810002	VOLVO	228
VOVX889000	VOLVO	228
VOVX960000	VOLVO	228

PART NUMBER	MANUFACTURER	PAGE NUMBERS
01-0009	ALFA ROMEO/FIAT/LANCIA	3
01-0013	ALFA ROMEO/FIAT/LANCIA	3
01-0026	ROVER GROUP	155
01-0027	ROVER GROUP	155
01-0028	ROVER GROUP	153
01-0058	B.M.W.	23
01-0108	MERCEDES-BENZ	109
01-0110	MERCEDES-BENZ	109
01-0139	ROVER GROUP	153
01-0195	ALFA ROMEO/FIAT/LANCIA	45, 85
01-0278	SCANIA	163
01-0287	FIAT-IVECO	53
01-0318	JAGUAR	77
01-0319	JAGUAR	77
01-0343	ROVER GROUP	157
01-0345	ROVER GROUP	159
01-0346	ROVER GROUP	159
01-0348	ROVER	157
01-0358	LEYLAND	91
01-0359	LEYLAND	91
01-0377	PERKINS	133
01-0378	PERKINS	133
01-0389	DAF/LEYLAND	91
01-0394	RENAULT	145
01-0396	RENAULT	145
01-0426	ROVER GROUP	153
01-0473	ALFA ROMEO/FIAT/LANCIA	3
01-0474	ALFA ROMEO/FIAT/LANCIA	3
01-0480	ALFA ROMEO/FIAT/LANCIA	45
01-0494	V.A.G.	13
01-0507	ALFA ROMEO/FIAT/LANCIA	45, 47, 85, 87
01-0524	MERCEDES-BENZ	103
01-0527	MERCEDES-BENZ	103
01-0530	PORSCHE	143
01-0783	ROVER GROUP	159
01-0784	ROVER GROUP	159
01-0788	DAF/LEYLAND	91
01-0829	FORD	65
01-0868	CHRYSLER	27
01-0869	CHRYSLER	27
01-0887	DAF/LEYLAND	91
01-0888	LEYLAND	91
01-0934	PERKINS	133
01-0935	PERKINS	133
01-0937	PERKINS	133
01-0942	P.S.A. GROUP	137
01-0943	P.S.A. GROUP	143
01-0944	P.S.A. GROUP	135
01-0969	SCANIA	163
01-0970	SCANIA	163
01-0971	SCANIA	163
01-0972	SCANIA	163
01-1227	V.A.G	9, 11, 15, 63, 165, 167, 169, 173, 191, 193, 195, 199, 207
01-1244	ROVER GROUP	157

PART NUMBER	MANUFACTURER	PAGE NUMBERS
01-1244	ROVER GROUP	157
01-1245	ALFA ROMEO/FIAT/LANCIA	5
01-1247	ROVER GROUP	157
01-1248	ROVER GROUP	157
01-1265	ALFA ROMEO/FIAT/LANCIA	51, 89, 151
01-1274	ROVER GROUP	153
01-1275	ROVER GROUP	155
01-1276	ROVER GROUP	155
01-1277	ROVER GROUP	153
01-1290	ROVER GROUP	157
01-1291	ROVER GROUP	157
01-1292	ROVER GROUP	157
01-1298	PERKINS	133
01-1299	ROVER GROUP	157
01-1300	ROVER GROUP	153
01-1309	MERCEDES-BENZ	101
01-1311	MERCEDES-BENZ	101
01-1317	VOLVO	205
01-1318	VOLVO	205
01-1334	MAZDA	93
01-1335	MAZDA	93
01-1342	RENAULT	145
01-1350	PERKINS	133
01-1351	PERKINS	133
01-1352	JAGUAR	77
01-1353	JAGUAR	77
01-1358	CUMMINS	39
01-1359	P.S.A. GROUP	27
01-1367	SAAB	161
01-1388	JAGUAR	77
01-1389	JAGUAR	77
01-1411	P.S.A. GROUP	135
01-1446	ROVER GROUP	91
01-1448	TOYOTA	189
01-1449	MERCEDES-BENZ	109
01-1454	V.A.G.	13
01-1467	ALFA ROMEO/FIAT/LANCIA	49
01-1478	PORSCHE	143
01-1482	PORSCHE	143
01-1498	V.A.G	9, 15, 191, 193, 195
01-1539	NISSAN	117
01-1540	NISSAN	117
01-1563	VOLVO	205
01-1684	MERCEDES-BENZ	105
01-1697	BEDFORD/ISUZU	19, 75
01-1698	BEDFORD/ISUZU	19, 75
01-1755	PERKINS	133
01-1796	ALFA ROMEO/FIAT/LANCIA	49, 89
01-1811	ALFA ROMEO/FIAT/LANCIA	37, 51, 89, 143
01-1871	B.M.W.	21, 25
01-1874	B.M.W.	21
01-1893	DAF/LEYLAND	91
01-1896	BEDFORD	19
01-1897	BEDFORD	19
01-1905	MAZDA	97

PART NUMBER	MANUFACTURER	PAGE NUMBERS
01-1913	B.M.W.	23
01-1921	FORD	27, 59
01-1922	CHRYSLER	27
01-1937	FORD	55, 57, 59
01-1940	FORD	55
01-1941	FORD	61
01-1942	FORD	61
01-1943	FORD	61
01-1944	FORD	61
01-1945	FORD	61
01-1946	FORD	61
01-1947	FORD	65
01-1951	G.M.	41, 125, 127
01-1954	G.M.	125
01-1956	P.S.A. GROUP	135
01-1961	P.S.A. GROUP	33
01-1970	SAAB	161
01-1971	FORD	65
01-1973	ALFA ROMEO/FIAT/LANCIA	7, 27, 65, 79, 159,
01-1974	ROVER GROUP	91
01-1975	PERKINS	133, 155
01-1983	JAGUAR	77
01-1985	JAGUAR	77
01-1993	FORD	65
01-2054	RENAULT	149
01-2056	ROVER GROUP/HONDA	67
01-2057	ROVER GROUP/HONDA	67
01-2058	ISUZU/G.M.	75, 129, 185
01-2059	TOYOTA	185
01-2061	MERCEDES-BENZ	101, 105
01-2064	MERCEDES-BENZ	105
01-2067	MERCEDES-BENZ	101, 105
01-2069	MERCEDES-BENZ	101
01-2071	MERCEDES-BENZ	109
01-2074	MERCEDES-BENZ	109
01-2077	SCANIA	163
01-2078	SCANIA	163
01-2079	ALFA ROMEO/FIAT/LANCIA	5
01-2082	ALFA ROMEO/FIAT/LANCIA	5
01-2087	ALFA ROMEO/FIAT/LANCIA	47, 85
01-2090	ALFA ROMEO/FIAT/LANCIA	45, 85
01-2093	G.M.	129
01-2099	MERCEDES-BENZ	109, 177
01-2101	MERCEDES-BENZ	107, 177
01-2103	P.S.A.	35, 141
01-2104	P.S.A. GROUP	35, 141
01-2105	RENAULT	115, 149, 207
01-2116	ALFA ROMEO/FIAT/LANCIA	3
01-2119	ALFA ROMEO/FIAT/LANCIA	3
01-2122	ROVER GROUP	153
01-2125	MERCEDES-BENZ	101
01-2127	MERCEDES-BENZ	101
01-2129	MERCEDES-BENZ	109
01-2131	MERCEDES-BENZ	109
01-2143	MITSUBISHI	113

PART NUMBER	MANUFACTURER	PAGE NUMBERS
01-2144	MITSUBISHI	113
01-2149	ISUZU/G.M.	75, 131
01-2166	MITSUBISHI	111
01-2167	MITSUBISHI	111
01-2168	MITSUBISHI	111
01-2169	MITSUBISHI	111
01-2170	MITSUBISHI	73, 115
01-2171	MITSUBISHI	115
01-2172	NISSAN	117
01-2175	NISSAN	117
01-2176	NISSAN	117
01-2177	NISSAN	121
01-2179	NISSAN	121
01-2181	G.M.	127
01-2184	G.M.	131
01-2186	PORSCHE	143
01-2196	SAAB	161
01-2206	FORD/TOYOTA	57, 93, 185, 205
01-2208	V.A.G	195
01-2244	ALFA ROMEO/FIAT/LANCIA	3, 47
01-2245	ALFA ROMEO/FIAT/LANCIA	3, 47
01-2248	ALFA ROMEO/FIAT/LANCIA	85
01-2256	HONDA	67
01-2257	HONDA	67
01-2258	G.M.	125
01-2259	G.M.	127
01-2260	ALFA ROMEO/FIAT/LANCIA	3
01-2263	ALFA ROMEO/FIAT/LANCIA	3
01-2271	B.M.W	25
01-2278	MERCEDES-BENZ	105
01-2281	MERCEDES-BENZ	105
01-2284	MERCEDES-BENZ	105
01-2290	P.S.A. GROUP	35, 141, 159, 183, 189
01-2293	MERCEDES-BENZ	105
01-2296	FORD	61
01-2297	FORD	61
01-2298	P.S.A. GROUP	31, 135
01-2299	P.S.A. GROUP	31
01-2300	P.S.A.	31
01-2301	P.S.A. GROUP	31, 33, 135, 147
01-2302	P.S.A. GROUP	31
01-2303	P.S.A.	31
01-2304	V.A.G	9, 13, 167, 195
01-2306	VOLVO	205
01-2308	VOLVO	205
01-2314	P.S.A. GROUP	29, 135
01-2317	ROVER GROUP	155
01-2318	ROVER GROUP	155
01-2319	ROVER GROUP/HONDA	67, 153
01-2320	ROVER GROUP/HONDA	67, 153
01-2321	ROVER GROUP	155
01-2322	ROVER GROUP	155
01-2323	HONDA	69
01-2324	ROVER GROUP/HONDA	69
01-2325	ISUZU/G.M.	19

PART NUMBER	MANUFACTURER	PAGE NUMBERS
01-2326	LADA	83
01-2327	LADA	83
01-2328	P.S.A. GROUP	31, 137
01-2329	P.S.A. GROUP	31, 137
01-2332	P.S.A. GROUP	137
01-2334	P.S.A. GROUP	31, 137
01-2336	PERKINS	133
01-2339	ALFA ROMEO/FIAT/LANCIA	5
01-2342	ALFA ROMEO/FIAT/LANCIA	5, 87
01-2345	MAZDA	99, 183
01-2346	MAZDA	99, 183
01-2348	TOYOTA	187
01-2349	TOYOTA	185, 187
01-2352	NISSAN	119
01-2357	NISSAN	119
01-2358	TOYOTA	187
01-2359	TOYOTA	187
01-2375	ALFA ROMEO/FIAT/LANCIA	3
01-2377	B.M.W.	21, 23
01-2384	FORD	59
01-2386	ALFA ROMEO/FIAT/LANCIA	45, 85
01-2390	MERCEDES-BENZ	101, 105
01-2392	MERCEDES-BENZ	101, 105
01-2403	ALFA ROMEO/FIAT/LANCIA	3, 5
01-2406	ALFA ROMEO/FIAT/LANCIA	7, 49, 89, 129, 183
01-2407	ALFA ROMEO/FIAT/LANCIA	49, 89
01-2409	ALFA ROMEO/FIAT/LANCIA	49, 89
01-2419	P.S.A. GROUP	31, 47, 87, 137, 139
01-2420	P.S.A. GROUP	31
01-2422	P.S.A. GROUP	31, 47, 137, 139
01-2423	P.S.A. GROUP	31
01-2425	MERCEDES-BENZ	101, 105
01-2429	MERCEDES-BENZ	105
01-2431	MERCEDES-BENZ	101
01-2433	ALFA ROMEO/FIAT/LANCIA	49, 89
01-2434	P.S.A. GROUP	35, 51, 141, 159
01-2438	P.S.A. GROUP	35, 121, 141
01-2441	P.S.A. GROUP	135, 145
01-2444	B.M.W.	23
01-2452	MITSUBISHI	115
01-2453	MERCEDES-BENZ	101, 103, 107, 177, 197
01-2455	TOYOTA	189
01-2457	P.S.A. GROUP	37, 89, 143
01-2459	P.S.A. GROUP	29
01-2462	V.A.G	165, 191
01-2464	V.A.G	165, 171, 191, 193
01-2470	V.A.G	13, 15, 63, 167, 169, 171, 173, 197, 199, 201, 203
01-2472	V.A.G	13, 167, 197
01-2474	ALFA ROMEO/FIAT/LANCIA	3, 5, 45, 47, 85
01-2475	ALFA ROMEO/FIAT/LANCIA	3, 5, 47
01-2477	ALFA ROMEO/FIAT/LANCIA	3, 5, 47
01-2478	ALFA ROMEO/FIAT/LANCIA	3, 5, 47
01-2482	G.M.	41, 125, 127, 161
01-2484	G.M.	41, 127
01-2488	V.A.G.	9, 11, 13, 165, 167, 171, 191, 193, 195, 197

PART NUMBER	MANUFACTURER	PAGE NUMBERS
01-2491	B.M.W.	21, 23
01-2493	TOYOTA	189
01-2496	VOLVO	205
01-2497	VOLVO	205
01-2499	ROVER GROUP	155
01-2500	FORD	61
01-2501	DAF/LEYLAND	91
01-2502	RENAULT	145
01-2504	FORD	55, 59, 61, 95
01-2508	RENAULT	145, 147
01-2510	RENAULT	145
01-2512	NISSAN	117
01-2514	NISSAN	117
01-2517	NISSAN	119
01-2520	MERCEDES-BENZ	105
01-2522	MERCEDES-BENZ	101, 107
01-2524	ALFA ROMEO/FIAT/LANCIA	45, 85
01-2527	ALFA ROMEO/FIAT/LANCIA	5, 87
01-2529	P.S.A. GROUP	37, 143
01-2534	B.M.W.	25, 129, 159
01-2546	MAZDA	93, 95
01-2551	ROVER GROUP	155
01-2552	ROVER GROUP	155
01-2553	ROVER GROUP	155
01-2554	ROVER GROUP	159
01-2561	NISSAN	65, 123
01-2563	MAZDA	93
01-2564	FORD	63
01-2568	P.S.A. GROUP	33, 147
01-2569	P.S.A. GROUP	33
01-2571	MAZDA	93, 95
01-2572	MAZDA	97
01-2573	VOLVO	205
01-2577	NISSAN	119
01-2580	NISSAN	119
01-2582	RENAULT	147, 205
01-2583	NISSAN	121
01-2585	RENAULT	115, 127, 129, 149, 207
01-2587	HONDA	67
01-2588	HONDA	67
01-2589	HONDA	67
01-2590	HONDA	67
01-2591	HONDA	69, 157
01-2592	HONDA	69, 157
01-2593	G.M.	127
01-2594	NISSAN	117
01-2596	NISSAN	117
01-2598	HONDA	69
01-2599	HONDA	69
01-2601	ALFA ROMEO/FIAT/LANCIA	3
01-2603	ALFA ROMEO/FIAT/LANCIA	47, 85
01-2606	ALFA ROMEO/FIAT/LANCIA	49, 89
01-2611	SUZUKI	179, 181
01-2612	SUZUKI	181
01-2613	FORD	55, 57

PART NUMBER	MANUFACTURER	PAGE NUMBERS
01-2615	V.A.G.	197
01-2626	MERCEDES-BENZ	109
01-2627	ROVER GROUP/HONDA	69, 159
01-2632	V.A.G	15, 17, 169, 173, 199, 201
01-2634	SCANIA	163
01-2635	SUZUKI	179, 181
01-2637	RENAULT	127, 145, 147
01-2640	RENAULT	145
01-2643	SAAB	161
01-2644	P.S.A. GROUP	33, 137
01-2651	RENAULT	207
01-2653	SCANIA	163
01-2654	P.S.A. GROUP	29, 33, 135, 139
01-2658	SCANIA	163
01-2660	B.M.W.	25, 159
01-2666	TOYOTA	187
01-2667	TOYOTA	187
01-2672	P.S.A. GROUP	37, 143
01-2696	G.M.	69, 129
01-2697	TOYOTA	185
01-2698	TOYOTA	187
01-2699	TOYOTA	185
01-2700	TOYOTA	185
01-2703	TOYOTA	189
01-2705	RENAULT	149
01-2706	MAZDA	99
01-2707	SUZUKI	183
01-2708	SUZUKI	183
01-2714	NISSAN	121
01-2741	RENAULT	147
01-2743	TOYOTA	187
01-2746	HYUNDAI	73, 83
01-2748	HYUNDAI	73, 83
01-2779	NISSAN	123
01-2789	MITSUBISHI	111, 113
01-2793	FIAT-IVECO	53
01-2795	FIAT-IVECO	53
01-2797	FIAT-IVECO	53
01-2799	FIAT-IVECO	53
01-2801	FIAT-IVECO	53
01-2803	FIAT-IVECO	53
01-2817	V.A.G	15
01-2818	RENAULT	123, 131, 149
01-2819	RENAULT	149, 183
01-5602	CUMMINS	39
01-5684	CUMMINS	39
01-5685	CUMMINS	39
01-5796	CUMMINS	39
01-S2482	G.M.	41, 125, 127, 161
01-S2593	G.M.	127
01-S2636	SAAB	161
01-S2643	SAAB	161
01-S2646	P.S.A. GROUP	33, 47, 87, 137, 139
01-S2656	G.M.	125
01-S2662	TOYOTA	185

PART NUMBER	MANUFACTURER	PAGE NUMBERS
01-S2664	SUBARU	179
01-S2665	SUBARU	179
01-S2670	SUBARU	179
01-S2671	DAEWOO	41
01-S2674	P.S.A. GROUP	35, 141
01-S2676	P.S.A. GROUP	37, 51, 63, 89, 141, 183
01-S2678	MERCEDES-BENZ	103
01-S2681	MERCEDES-BENZ	79, 103, 107, 109
01-S2685	DAEWOO	41
01-S2686	DAEWOO	41
01-S2701	B.M.W./TOYOTA	25, 189
01-S2702	TOYOTA	189
01-S2704	TOYOTA	189
01-S2710	NISSAN	119
01-S2712	NISSAN	119
01-S2716	NISSAN	121
01-S2718	HYUNDAI	71
01-S2719	HYUNDAI	71
01-S2720	HYUNDAI	73, 83
01-S2721	HYUNDAI	71
01-S2722	HYUNDAI	71
01-S2723	HYUNDAI	71
01-S2724	HYUNDAI	71
01-S2725	HYUNDAI	71
01-S2726	HYUNDAI	71
01-S2727	SMART	175
01-S2732	HYUNDAI	71
01-S2733	HYUNDAI	71
01-S2734	HYUNDAI	71, 81
01-S2737	RENAULT	147
01-S2739	SUZUKI	181
01-S2740	SUZUKI	181
01-S2744	MITSUBISHI	71, 81, 113
01-S2745	MITSUBISHI	71, 81, 113
01-S2750	P.S.A. GROUP	37, 89, 141, 143, 207
01-S2755	MAZDA	95
01-S2758	MAZDA	93
01-S2761	SUZUKI	181
01-S2762	TOYOTA	187
01-S2769	VOLVO	205
01-S2771	SUZUKI	179, 181
01-S2783	HYUNDAI	71, 81
01-S2785	MERCEDES-BENZ	107
01-S2787	MERCEDES-BENZ	107
01-S2790	HYUNDAI	71
01-S2791	HYUNDAI	71
01-S2805	ALFA ROMEO/FIAT/LANCIA	49, 89, 129, 183
01-S2808	ALFA ROMEO/FIAT/LANCIA	3, 49, 89, 129
01-S2811	ALFA ROMEO/FIAT/LANCIA	51, 131
01-S2814	G.M.	127
01-S2816	SMART	175

DIMENSIONS

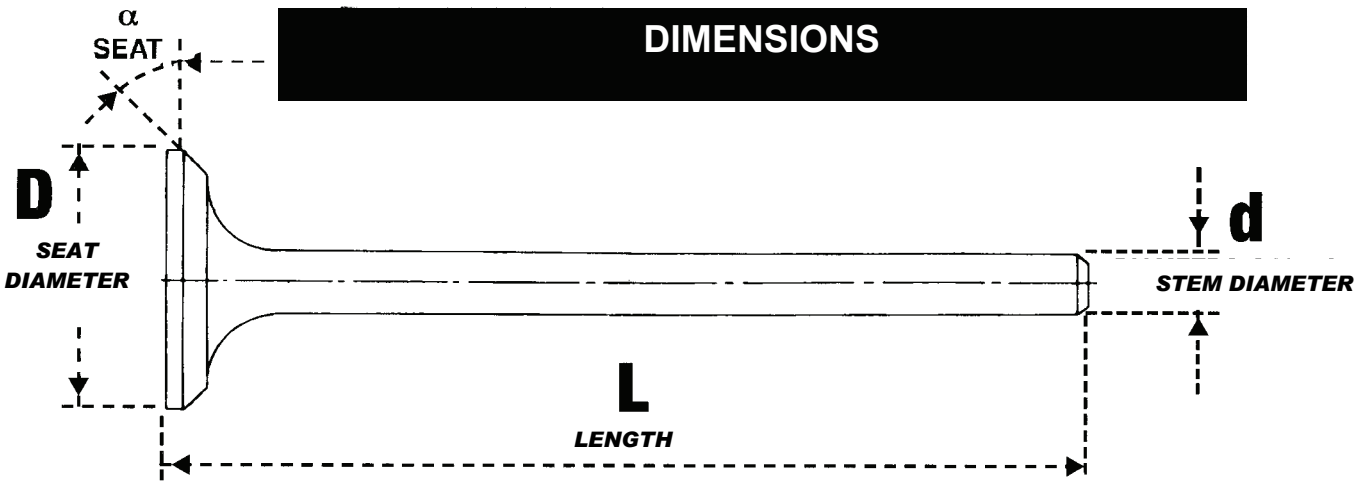

HEAD STYLES

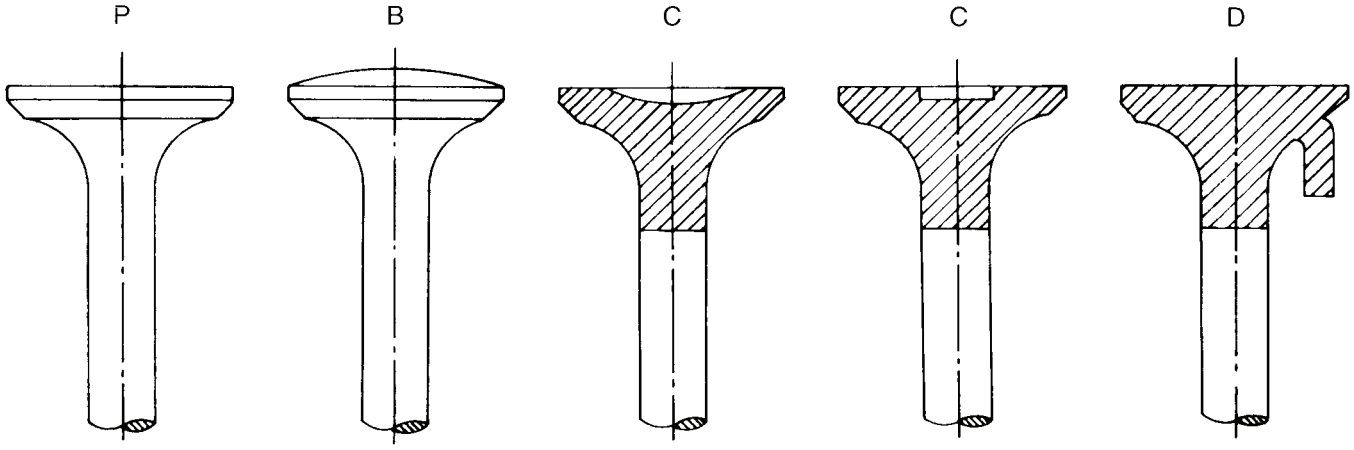

STEM ENDS

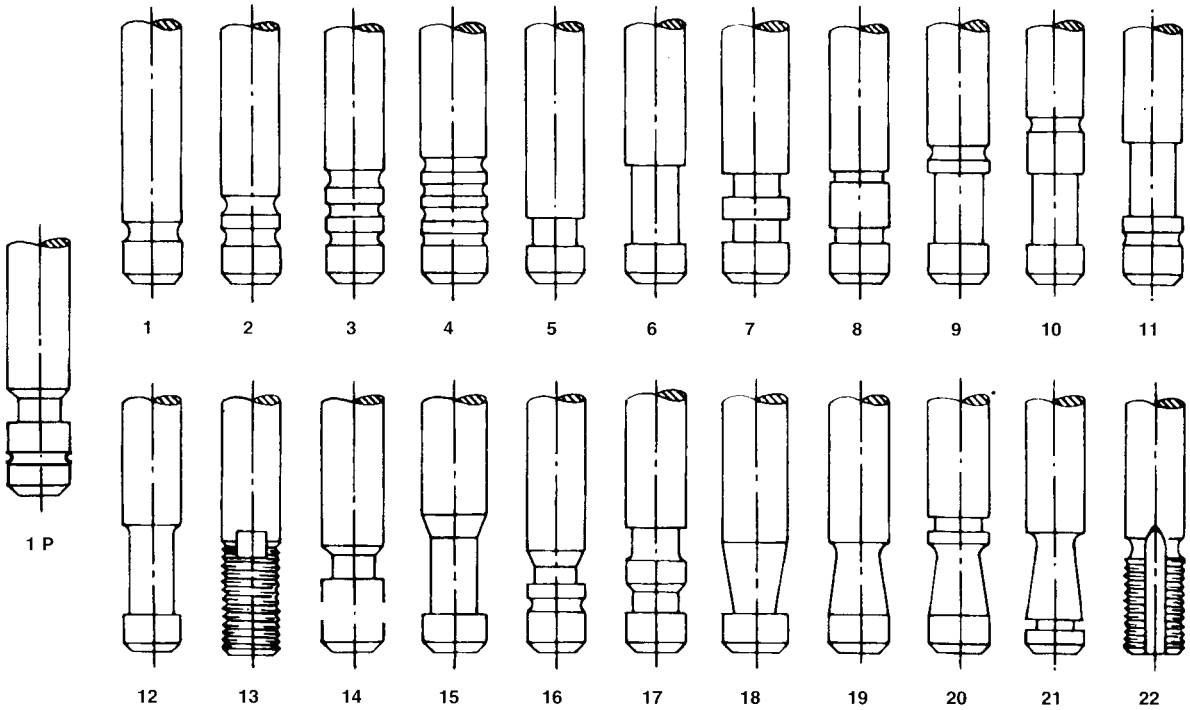

Valve guide types

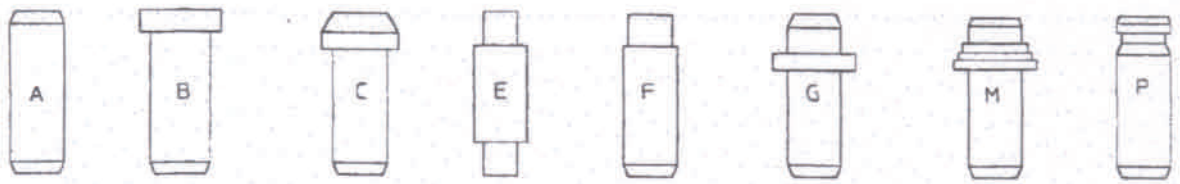

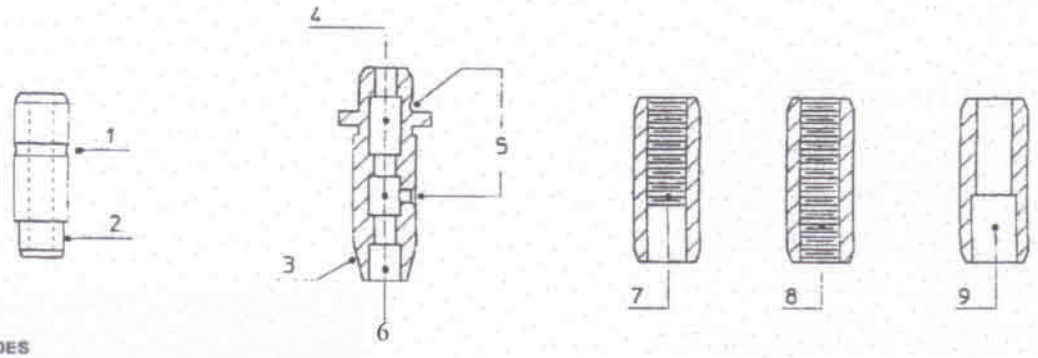

SHAPES OF GUIDES

In order to facilitate identification, the shapes of the guides are sketched and symbolised by letters A, B, C, etc.
The following particular features are numbered from 1 to 9.

1 - Outer groove for snap ring.
2 - Narrower end.
3 - Conical end.
4 - Recessed area in the bore.
5 - Lubrification holes.
6 - Counterbore at end of guide.
7/8 - Lubrication threads.
9 - Counter bore.

Materials used for valve guides

G	Pearlitic grey iron with good wear resistance
G-1	Pearlitic grey iron & phosphorus giving greater resistance to wear due to its high anti-friction qualities
B	Alloy with high resistance to wear and corrosion. Suitable for medium duty applications
B-1	Phosphor-bronze alloy having high wear resistance, thermal conductivity and anti-friction qualities. Used in hidg stress areas
Cu	Hardened alloy with high resistance to wear and corrosion. Suitable for heavy duty applications
S03	Tin/phosphorus alloy self lubricating giving excellent wear properties in high performance applications
S06	Copper/sulphur alloy self lubricating giving excellent wear properties in high performance applications