GRUNDFOS MQ

http://qr.grundfos.com/i/MQinstallation

be
think
innovate

GRUNDFOS

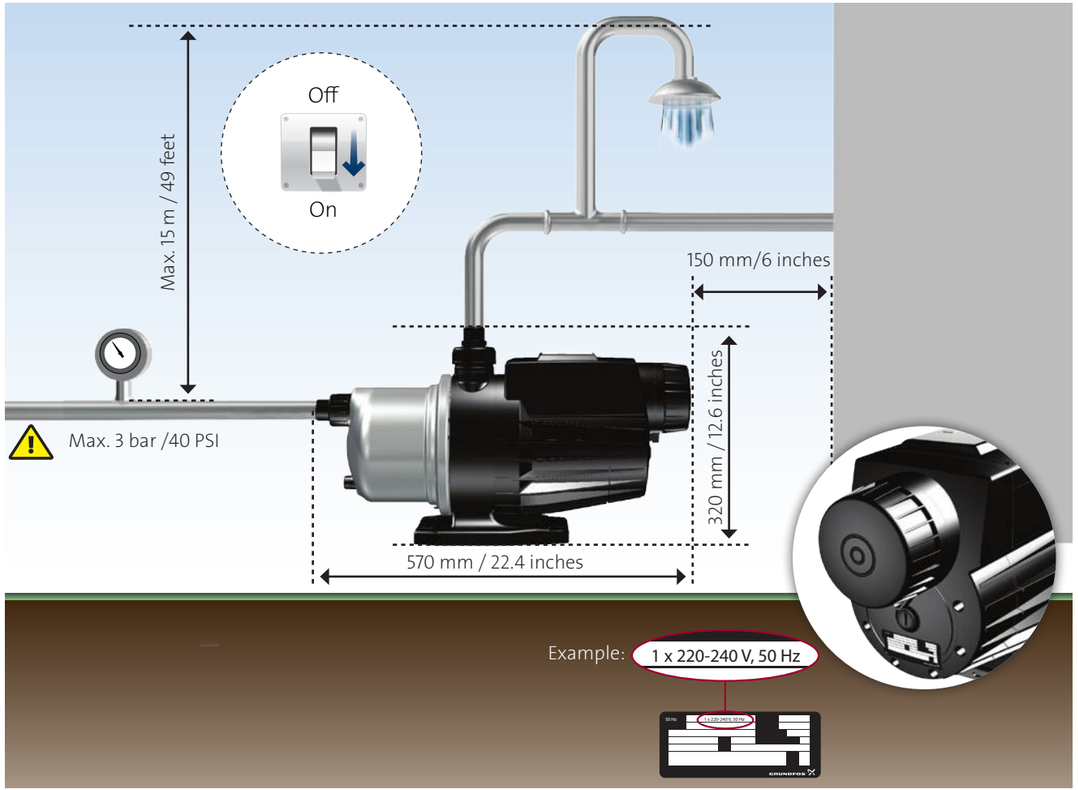
Off
On
Max. 15 m / 49 feet
150 mm/6 inches
320 mm / 12.6 inches
570 mm / 22.4 inches
Max. 3 bar /40 PSI
Example:
1 x 220-240 V, 50 Hz

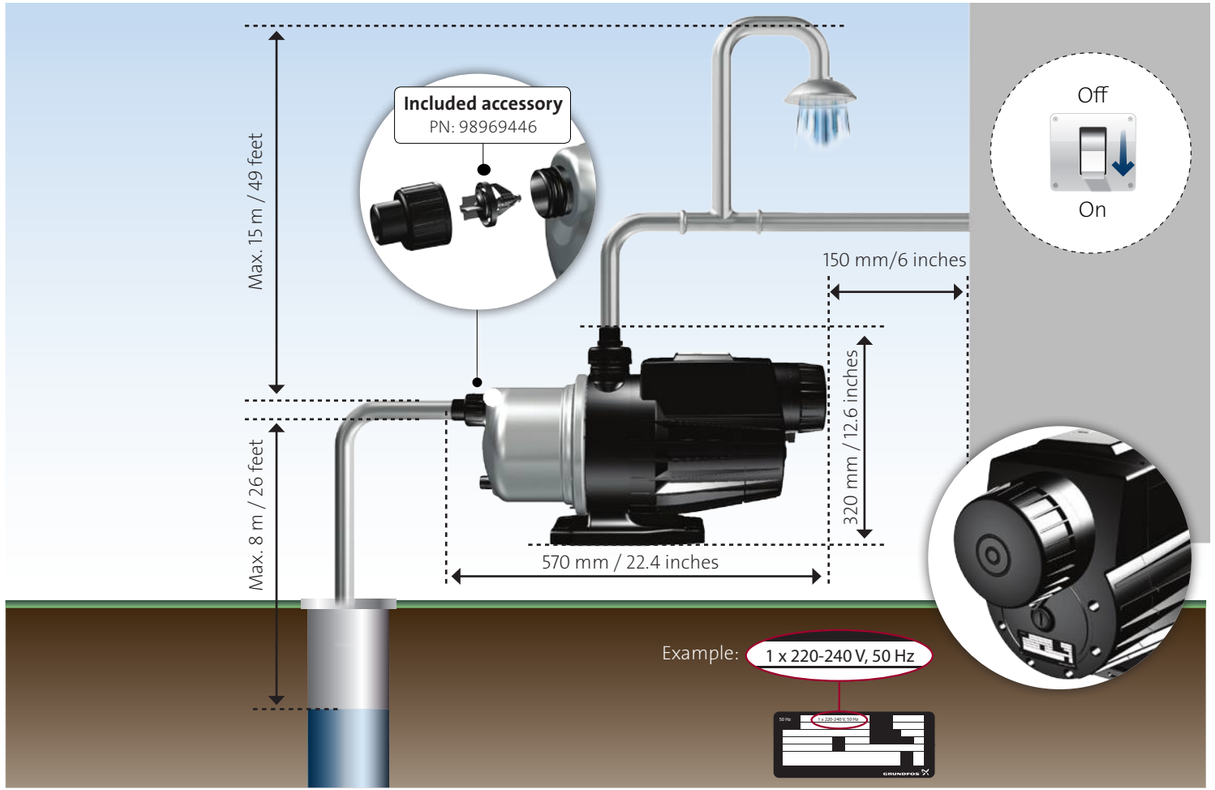
Included accessory
PN: 98969446
Off
On
Max. 15 m / 49 feet
150 mm/6 inches
320 mm / 12.6 inches
570 mm / 22.4 inches
Max. 8 m / 26 feet
Example:
1 x 220-240 V, 50 Hz

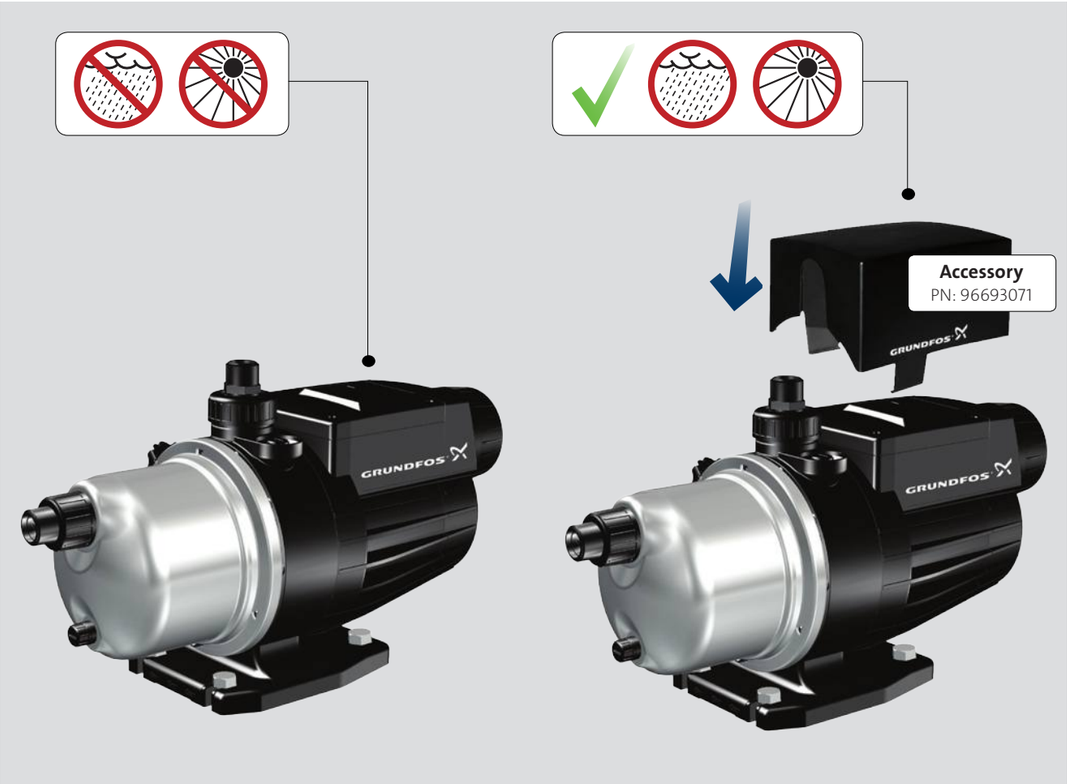
Accessory
PN: 96693071

1

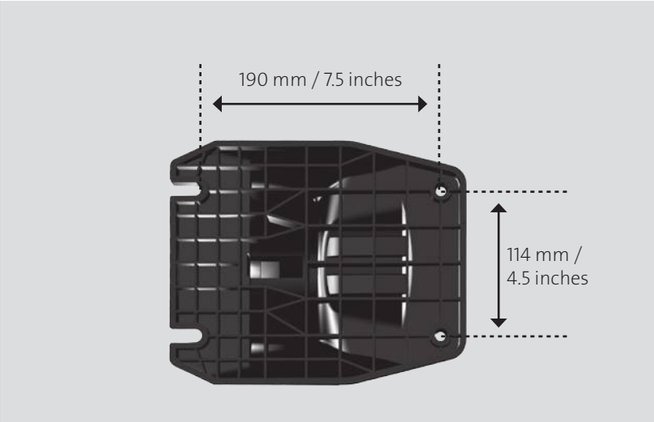
190 mm / 7.5 inches
114 mm /
4.5 inches

Max. 18 °

2
GRUNDFOS
4 x

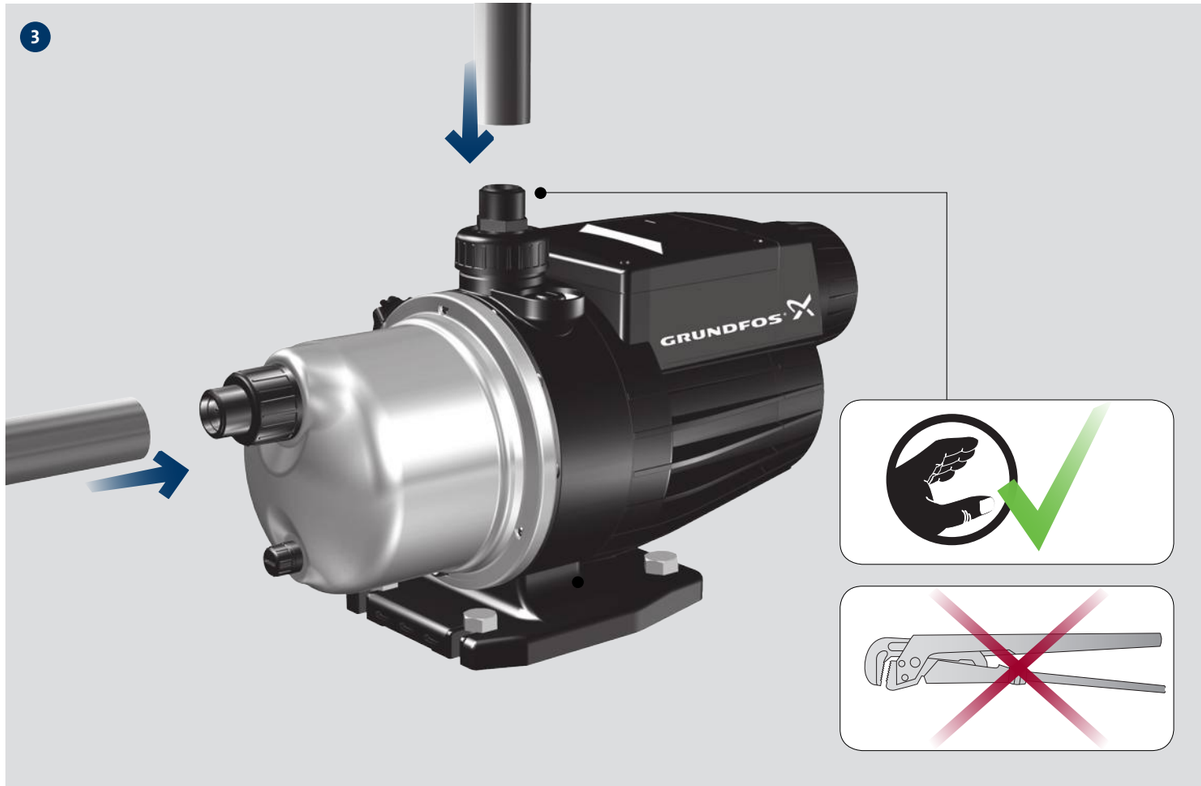
3
GRUNDFOS

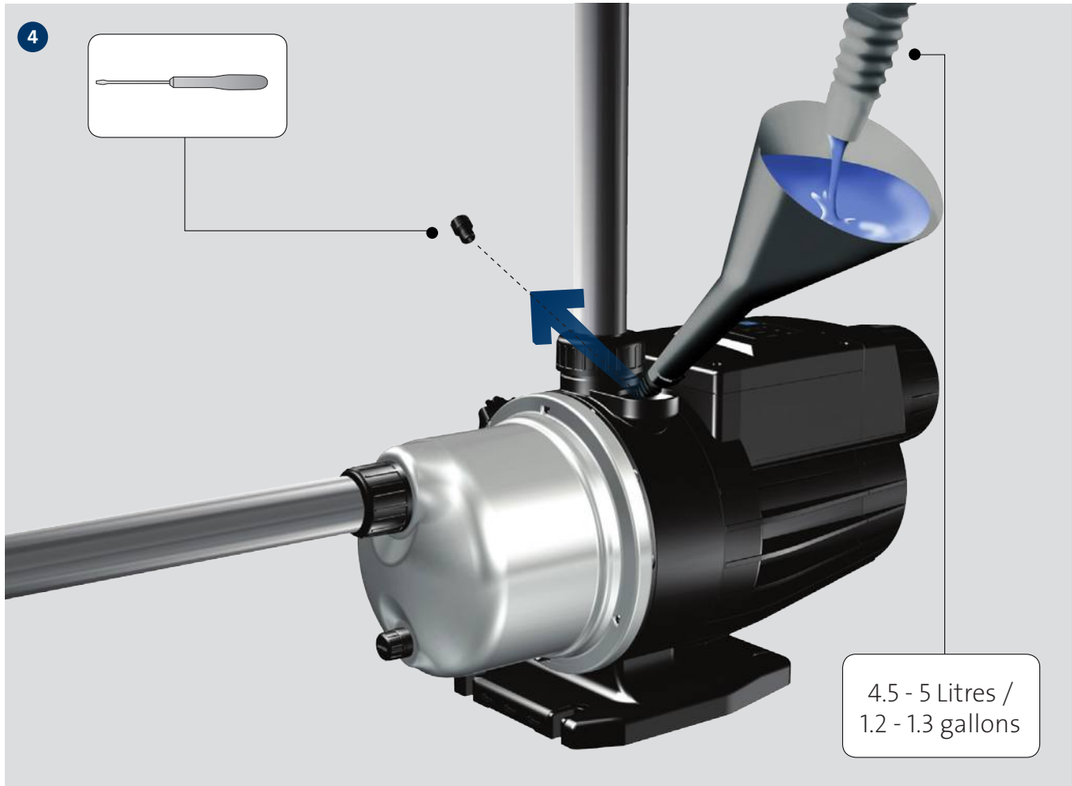
4
4.5 - 5 Litres /
1.2 - 1.3 gallons

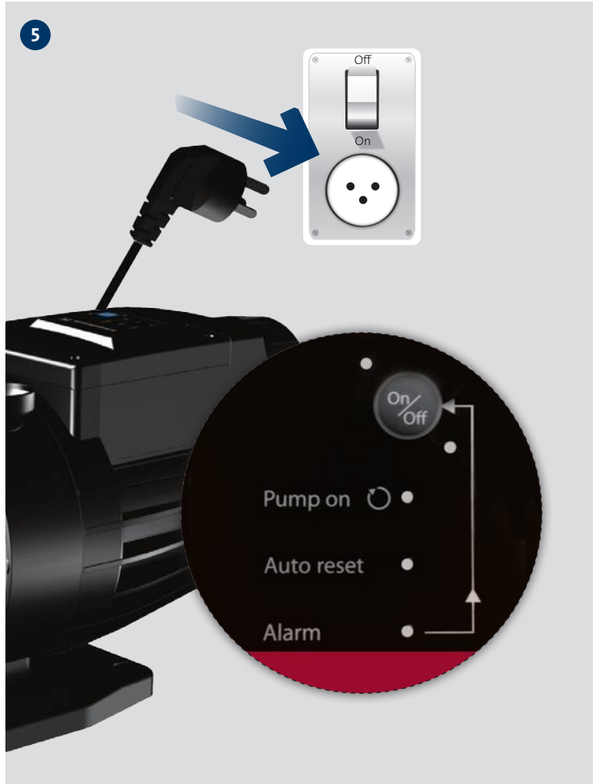
5
Off
On
On/Off
Pump on
Auto reset
Alarm

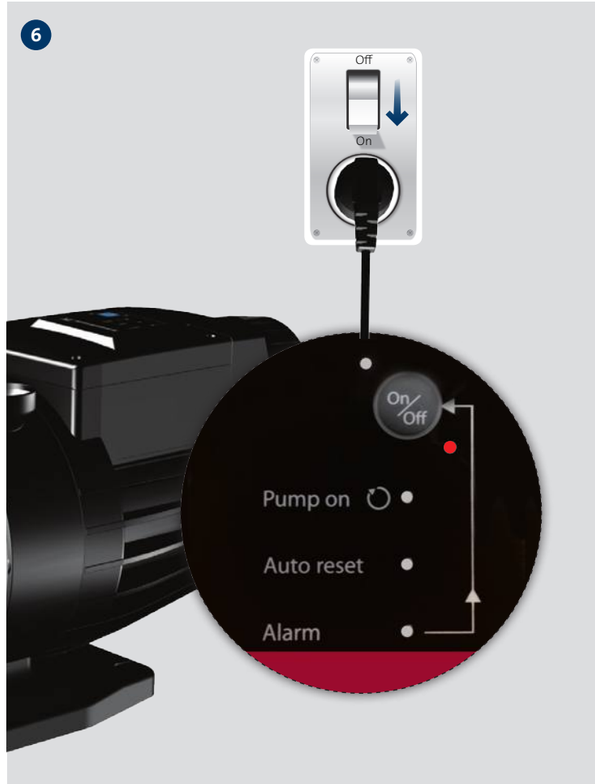
6
Off
On
On/Off
Pump on
Auto reset
Alarm

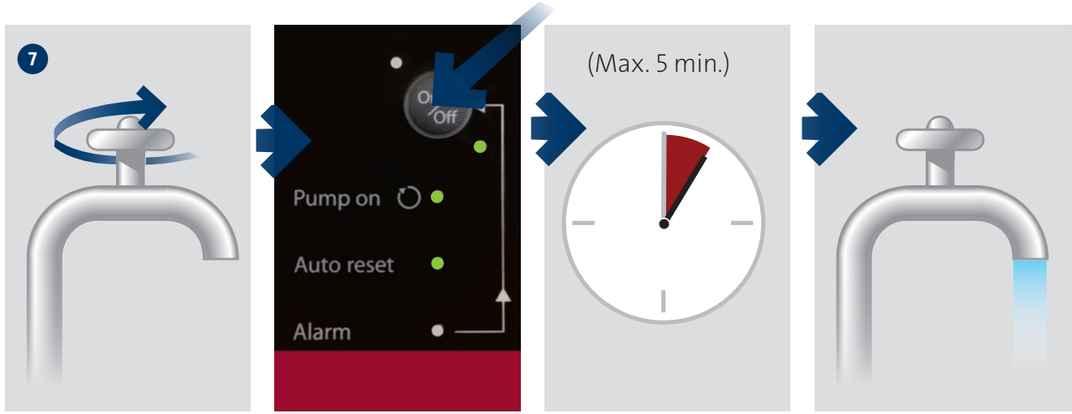

Further product documentation

net.grundfos.com/qr/i/V7164915