The users should read this manual thoroughly before operation and observe the operating method and precautions for more effective operation.

MARINE TRANSMISSION
SERVICE MANUAL

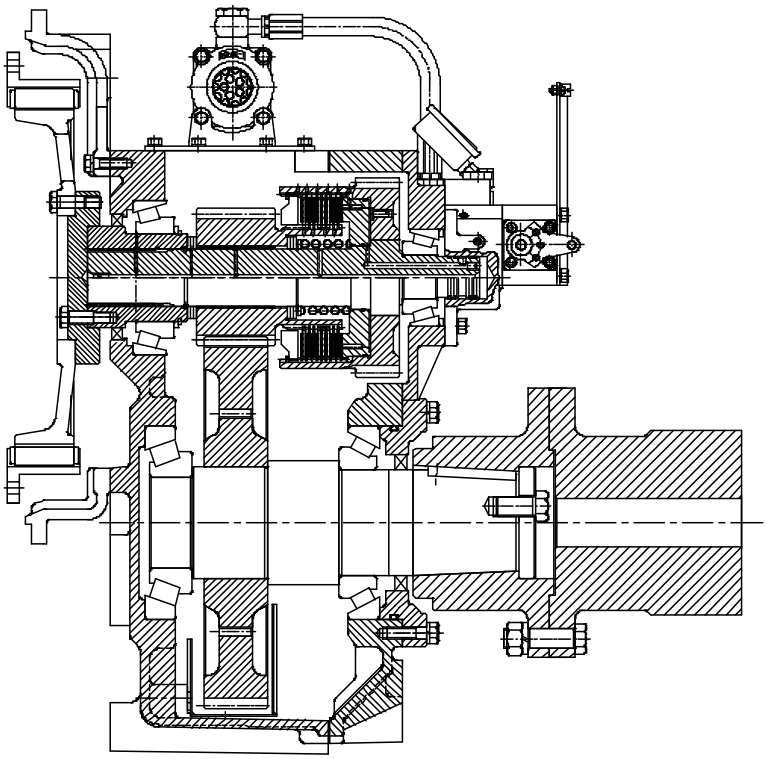

D-I INDUSTRIAL CO., LTD.

Introduction

This manual contains description of construction, operation principle, correct operation and handling method, precaution for installation, repair and check, etc. on D-I Marie transmission(all models)

APPLICATION	HYDRAULIC MARINE TRANSMISSION FOR MARINE APPLICATION
MODEL	ALL MODELS
The users should read this manual thoroughly before operation and observe the operating method and precautions. Keep this manual at a place for next time.	

Before operation, users should read the contents ⚠ marked in this manual. Since the contents ⚠ marked are very important for safety, users should follow the instruction. In this manual, Danger degree, which can occur by faulty treatment of users, are divided as following table.

DANGER	If the contents⚠ marked are ignored and, an urgent situation where people receive severe injure or are died can happen.
CAUTION	If the contents⚠ marked are ignored and, , it can be the cause of death or sever injure and can be the cause of material damage.
IMPORTANT	If the contents⚠ marked are ignored and, it can be the cause of be the cause of material damage.
	Important content of this manual which should be observed.

CONTENTS

SECTION 1 - - - - - - - - - - - - - - INTRODUCTION

SECTION 2 - - - - - - - - - - - - - - CONSTRUCTION

SECTION 3 - - - - - - - - - - - - - - PRINCIPLES OF OPERATION

SECTION 4 - - - - - - - - - - - - - - HYDRAULIC SYSTEM

SECTION 5 - - - - - - - - - - - - - - INSTALLATION

SECTION 6 - - - - - - - - - - - - - - OPERATION

SECTION 7 - - - - - - - - - - - - - - PREVENTIVE MAINTENANCE

SECTION 8 - - - - - - - - - - - - - - TROUBLE SHOOTING

SECTION 9 - - - - - - - - - - - - - - DISASSEMBLY AND ASSEMBLY

ANNEX Ⅰ PERIODIC INSPECTION TABLE

ANNEX Ⅱ OVERHAUL KIT

ANNEX Ⅲ PART ORDER SHEET

ANNEX Ⅳ WARRANTY LETTER

ANNEX Ⅴ JIG DRAWING

SECTION 1 - INTRODUCTION.

1-1. GENERAL

The D-I marine transmission described in this manual are power transmission unit for ships, which transmit the power generated from engine to propeller.

The major functions are ahead, neutral, astern in propulsion and certain rate of speed reduction, and consists of construction to support the thrust force which is to be generated from the propulsive force of propeller.

The ahead and astern operation of marine transmission is transmitted by a pair of hydraulic multiple clutches and the necessary hydraulic system for it is installed in marine transmission.

1-2. SPECIFICATIONS

Model	Reduction ratio	Max. Input speed (rpm)	Max. Input torque (kg-m)	Pressure (kg/㎠)		Dry Weight (kg)	Flow of cooling water (ℓ/min)
				Clutch oil	Lube oil		
DMT18A	1.64, 2.17 2.52, 3.13, 3.32	3,500	17	20～24	2～4	74.5	20～40
DMT25AL	1.64, 2.07 2.52, 2.96, 3.32		30			77	
DMT50A DMT70T DMT90A	1.61, 2.06, 2.45, 2.82, 3.12, 3.46	3,000	55 87.5 87.5	20～24	2～4	143 162 162	40～60
DMT100T	1.61, 2.06, 2.45, 2.82	3,000	97	20～24	2～4	164	40～60
DMT100HL	4.07, 4.50, 4.95 5.29 5.95	3,000	89 86.7 75.5	20～24	2～4	263	40～60
DMT110A	1.77, 2.09 2.42, 2.82, 3.19, 3.81	2,800	110	20～24	2～4	212	40～60
DMT135HL	4.07 4.50 4.95	2800	130 125 115.7	20～24	2～4	293	40～60
DMT140H	1.97, 2.57 3.03, 3.46	2,800	130	20～24	2～4	218	40～60
DMT144H DMT150H	1.83, 2.09 2.51, 3.08, 3.43	2,500	145 168	20～25	2～4	287	40～60
DMT170HL	4.04, 4.48	2,500	168	20～25	2～4	352	40～60
DMT180HL	5.15, 5.96	2,500	168	20～25	2～4	475	40～60
DMT200H	1.83, 2.09 2.51, 3.08, 3.43	2,500	200	20～25	2～4	310	40～60
DMT200HL	4.04, 4.48	2,500	200	20～25	2～4	370	40～60

Model	Reduction ratio	Max. Input speed (rpm)	Max. Input torque (kg-m)	Pressure (kg/㎠)		Dry Weight (kg)	Flow of cooling water (ℓ/min)
				Clutch oil	Lube oil		
DMT240H	1.50, 1.97 2.44, 2.93, 3.40	2,500	219	20～26	1.5～4	400	60～80
DMT260H	2.06, 2.50 2.92, 3.26	2,500	259	20～26	1.5～4	490	60～80
DMT260HL	3.53, 4.08, 4.52, 5.04	2,500	259 239	20～26	1.5～4	640	60～80
DMT280H	2.06, 2.50 2.92, 3.26	2,500	298	20～26	1.5～4	510	60～80
DMT280HL	3.53, 4.08, 4.52	2,500	298	20～26	1.5～4	660	60～80

⚠ CAUTION

D-I Marine transmission must be operated within the limit of capacity of marine engine, If not, slip, overheat or breakage of power transmission line can happen.

If any questions, contact to D-I Industrial Co..

D-I Marine transmission must not be used for the marine engine which is rotated clock wise when seen from the rear of the engine.

If D-I Marine transmission should be used for the clock wise rotation engine, cantact with D-I Industrial co. for consultant.

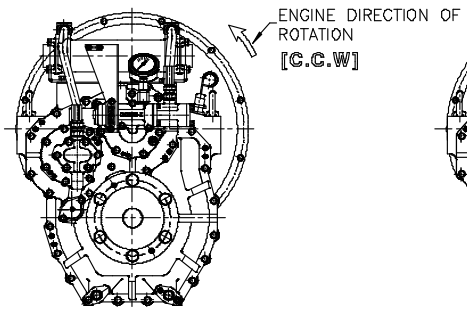

[C.C.W ENGINE]

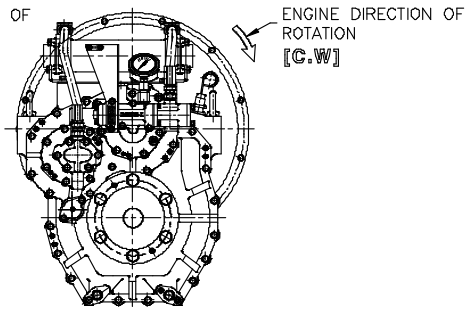

[C.W ENGINE]

SECTION 2 - CONSTRUCTION

2-1. GENERAL

D-I marine transmission consists of three major assemblies. They are input shaft assembly, astern shaft assembly and output shaft assembly for the power transmission system, also there are oil pressure-producing pump assembly, oil cooler assembly, selector valve assembly and valve holder(mamifold) assembly, pump holder assembly for the hydraulic system.

They are the lock-up type in which a marine gear housing is bolted directly to the engine flywheel housing, and the power is tansmitted from driving ring which is fitted on the flywheel of engine to the input shaft through a spider with rubber blocks fixed on the input shaft. This system makes easy installation of marine transmission on the engine and easy replacement of the rubber block.

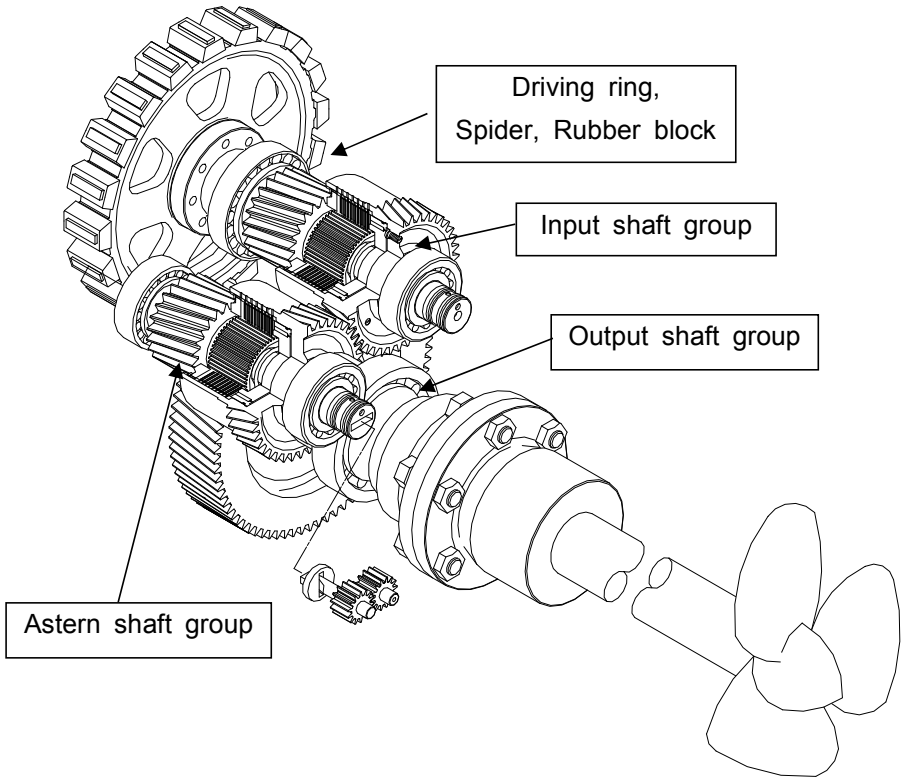

[Fig-1] Marine Transmission Construction

2-2. INPUT SHAFT ASSEMBLY

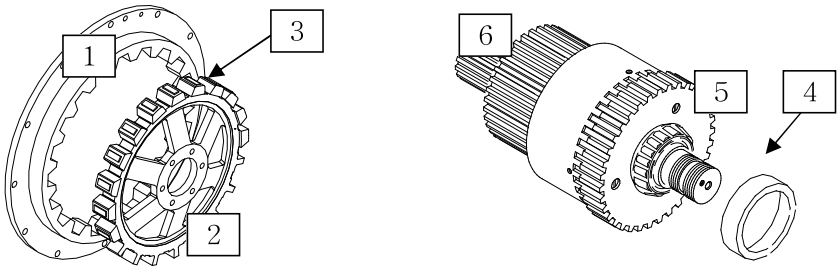

1) Driving ring

The driving ring is furnished with the involute groove on which the rubber block is fixed to transmit power, and is bolted directly to the engine flywheel.

2) Spider

The spider is fixed on the input coupling with reamer bolts, and constructed in a manner that the rubber block can be fixed on it.

3) Rubber block

The rubber blocks are rubber product of involute gear teeth, and reduce rotative vibration of the engine and transmit the power smoothly.

4) Input shaft

The input shaft is connected with an input coupling with a spline, and an ahead clutch housing is shrinkage-fitted to it.

5) Ahead clutch sub-assembly

The ahead clutch sub-assembly consists of a clutch housing, a pinion, a clutch piston, the steel plates with internal gear teeth, the sintered plates with external gear teeth and a back plate.

The steel plates are furnished with internal gear teeth which are engaged with external gear teeth of the pinion, and the external sintered plates are furnished with external gear teeth which are engaged with internal gear teeth of the clutch housing.

The internal steel plates and external sintered plates are assembled alternately with each other, and the pressured oil pushes the clutch piston which actuates the ahead clutch when the lever of the selector valve is shifted to ahead position. Then, the internal steel plates and external sintered plates are stuck fast to each other to transmit the power from the ahead clutch housing to the pinion.

If the lever is shifted to the neutral position, the clutch piston returns to its original position by the force of a return spring, and thereby oil is discharged from the piston and the clutch is automatically separated.

6) Pinion

The pinion is engaged with an output gear fixed on the output shaft to transmit the power from the ahead clutch housing to the output gear.

2-3. Astern shaft assembly

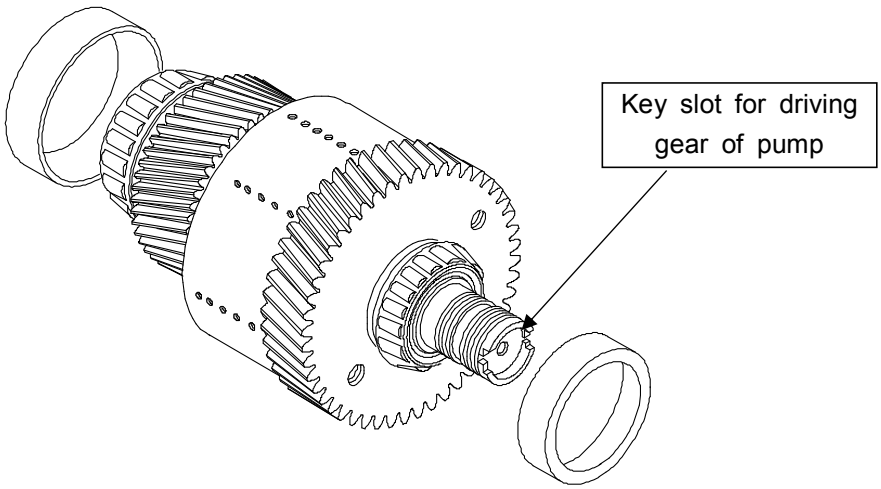

The astern shaft assembly has the same parts as those which that the input shaft assembly has, except that the former has no spline in the front and has the hydraulic pump driving device in the rear end.

2-4. Output shaft assembly

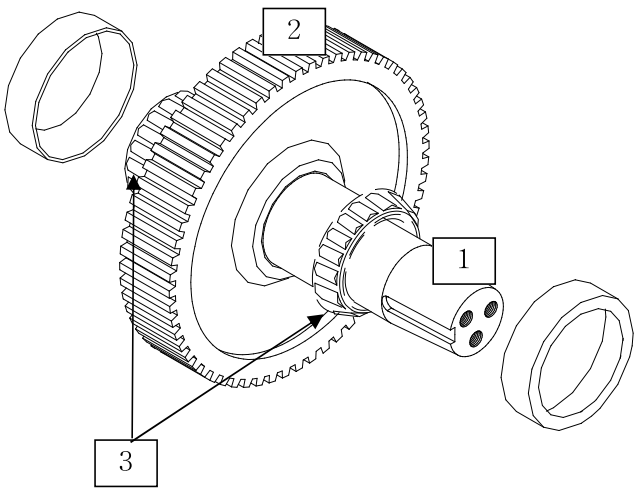

1) Output shaft

The output shaft is supported with two taper roller bearings, and an output gear is shrinkage-fitted thereon. It has an output shaft coupling attached thereto in the rear end.

2) Output gear

The output gear is engaged with an ahead and an astern pinion at all time.

3) Taper roller bearings

The taper roller bearings fixed on both sides of the output shaft support the thrust force generated from the propeller during ahead or astern actuation.

4) Output coupling

The output coupling is connected to the output shaft by means of taper and keyed connection and is fixed firmly on it with bolts and a lock washer.

2-5. Case assembly

The case assembly is made of cast iron and consists of a case, a case cover, and a bearing carrier.

2-6. Manifold(Valve holder) assembly

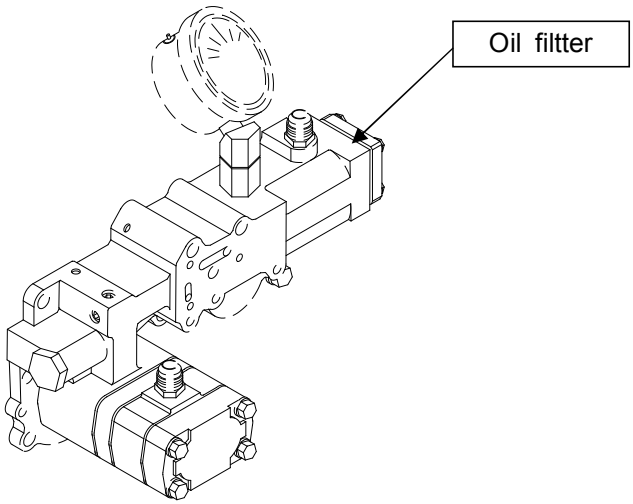

The manifold (valve holder) is made of cast iron, and includes oil pressure regulating valve.

And, it is fixed on the bearing carrier, to lead oil to the ahead and astern shafts.

	Manifold, which is used for over DMT 150H, is separated into Valve holder and Pump holder. ☞ **[Refer to PART LISTS for each Marine Gear]**

2-7. Secondary oil filter

This is attached to the inlet of the valve holer to re-filtrate which is oil filtered through a strainer on the inlet side of the pump before leading it to the valve holder.

As it has simple construction, it is very easy to clean by removing the filter cover.

Periodic Inspection : **ANNEX I**

2-8. Selector valve assembly

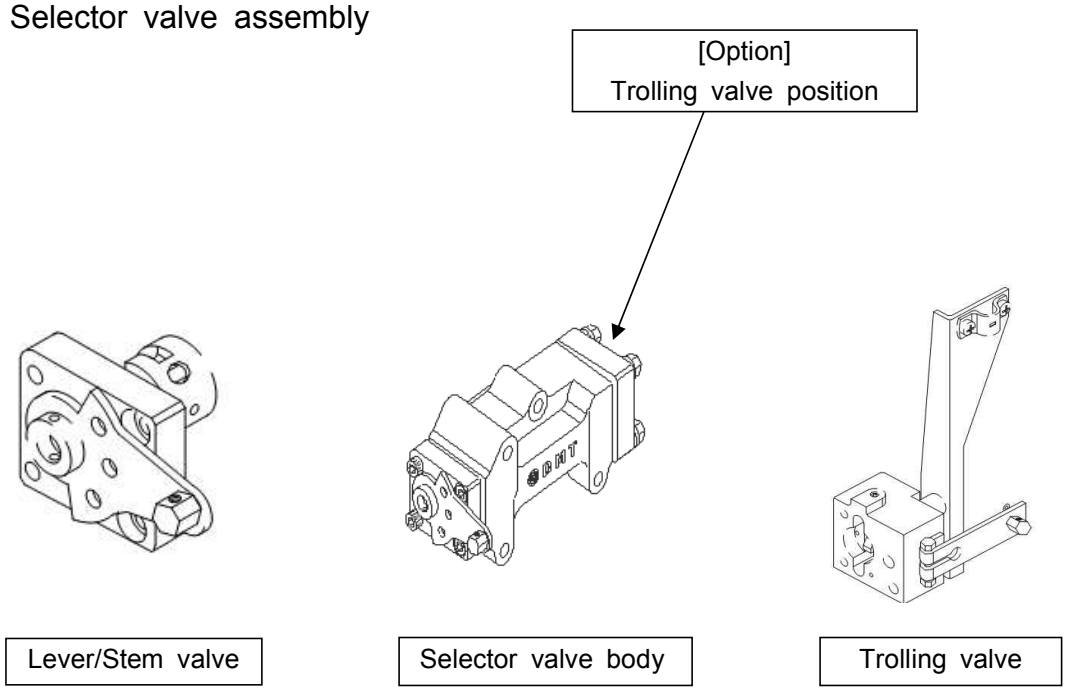

1) Selector valve body

The selector valve body is made of cast iron, and bolted on the manifold.

2) Valve stem

The valve stem is rotated in the valve body, and has three ports leading oil to the passages for ahead, neutral, and astern position. The pressured oil for actuation of the clutch is led to each clutch through these passages.

3) Lever

The lever is fixed on the valve stem with a spring pin, and clutch operation for ahead, neutral, or astern position can be performed by operation of this lever.

And it is provided with a proper control head to make remote control.

2-9. Hydraulic pump assembly

The hydraulic pump is the circumscribed gear type, and bolted on the pump holder. The pump driving gear is connected by keyed connection way on the end of the astern shaft to be driven and rotated at the same speed as that of engine, but in the opposite direction.

2-10. Oil strainer assembly

The oil strainer assembly is connected with a suction pipe of the pump inlet side of filtrate oil and fixed on the bottom side of the cover with screws.

Periodic Inspection : **ANNEX Ⅰ**

2-11. Oil cooler

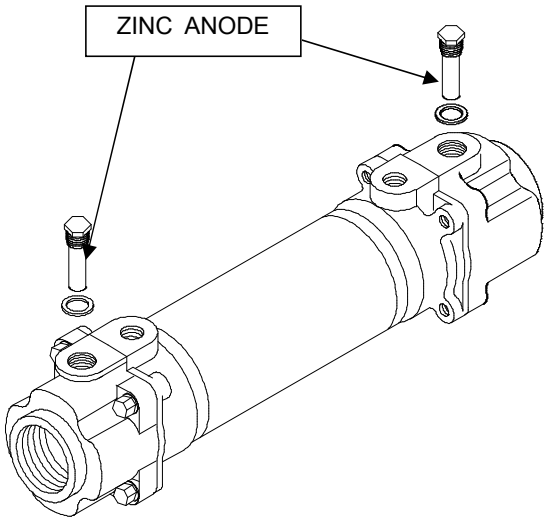

The oil Cooler is fixed above the case cover with bolts, and cools the oil supplied from the hydraulic pump before leading it into the secondary oil filter.
Oil Cooler contains albrass(mixed aluminum and brass) pipe which is strong against corrision. In addition, Zinc anode is put into the oil cooler.

Periodic Inspe**ction** : **ANNEX Ⅰ**

SECTION 3 - Principles of operation

3-1. General

D-I Marine transmission must be operated within the limits of rated load capacity, and has the same capacity and reduction ratio for the ahead and astern actuation. And, all the important functions are actuated with pressure oil.

The ahead and astern actuation clutches are actuated with high pressure oil, and the input shaft spline, bearings, output gear, pinion bush, internal steel plates and external sintered plates, etc. are forced-lubricated with low pressure oil.

3-2. Direction of rotation

The input shaft is rotated in the same direction as that of engine, and the output shaft in the opposite direction during ahead actuation but in the same direction during astern actuation.

3-3. Power transmission flow

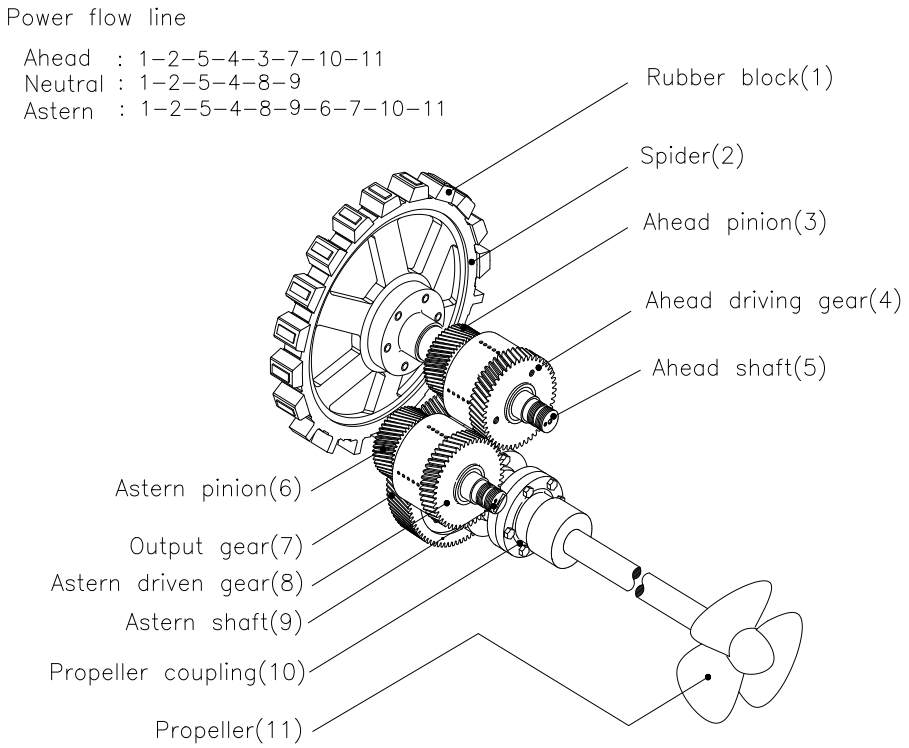

[Fig-2] Marine Transmission Power Flow

1) Neutral position

The power is transmitted from the driving ring bolted on the flywheel of the engine to the spider with the rubber blocks attached. The spider transmits the power to the input shaft via the input coupling, and the ahead clutch housing, which is shrinkage fitted to the input shaft, is rotated simultaneously.

The internal gear teeth of the ahead clutch housing are engaged with the external gear teeth of the external sintered plates for the ahead clutch actuation, and these sintered plates is rotated simultaneously. And, the external gear teeth of the ahead clutch housing are engaged with those of the astern clutch housing, and the internal gear teeth of the astern clutch housing are engaged with the external gear teeth of the external sintered plates for the astern clutch actuation, so that the astern clutch housing and the external sintered plates for astern actuation are rotated in the opposite direction of the engine.

In the neutral position, all the parts being rotated of the marine transmission does not bear any power.

2) Ahead position

In the ahead position, the high pressure oil which is led from the selector valve pushes the clutch piston of the ahead clutch, and the clutch plates in the ahead clutch housing are stuck fast to each other. And the internal steel plates begine to rotate in the same direction as that of the engine in the neutral position. The internal gear teeth of steel plates are engaged with the external gear teeth of the ahead pinion, and thus the pinion is rotated in the same direction as that of the external sintered plates at the same speed.

At this point, the output gear engaged with the pinion is rotated in the opposite direction of the engine. And the power is transmitted to the propeller through the shrinkage-fitted output shaft and the output gear.

3) Astern position

In the astern position, the external sintered plates in the astern clutch housing, which is rotated at the same speed as the engine and in the opposite direction up to now, is stuck fast to the internal steel plates. The internal gear teeth of steel plates are engaged with the external gear teeth of the astern pinion, and thereby the astern pinion is rotated in the same direction as that of the external sintered plates at the same speed.

At this point, the output gear engaged with the astern pinion is rotated in the same direction as that of the engine. And the power is transmitted to the propeller through the shrinkage-fitted output shaft and the output gear.

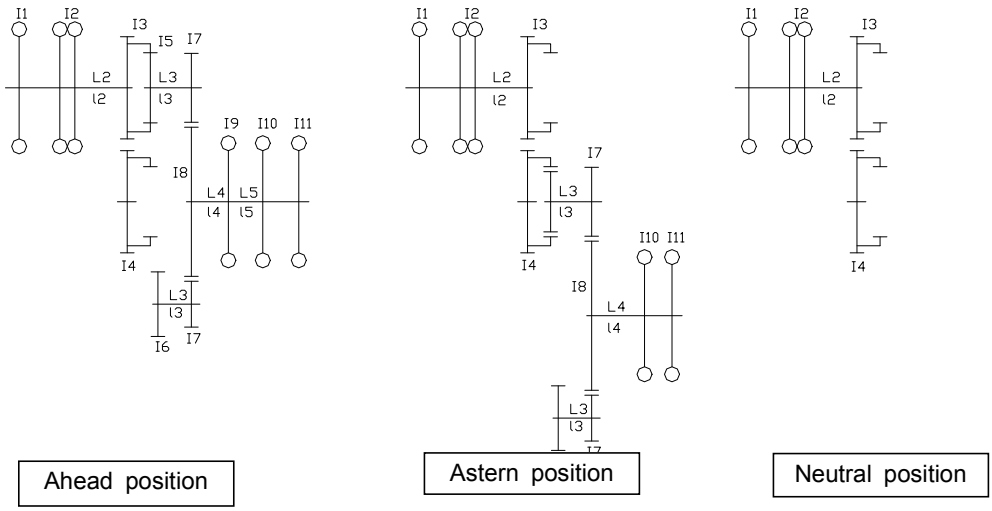

[Fig-3] Marine Transmission Power Flow

SECTION 4 - HYDRAULIC SYSTEM

4-1. Genernal

The hydraulic system is shown in Fig.4. The oil contained in the marine transmission flows into the pump through the oil strainer, and high pressure oil that is discharged from the gear pump is led to the selector valve body through the oil cooler, the secondary oil filter and the manifold. And then, the oil is regulated to the determined pressure by means of the oil pressure regulating valve before being led to the valve stem for clutch actuation.
By changing the oil direction of the valve stem, the oil is led to either the ahead or astern actuation clutch.

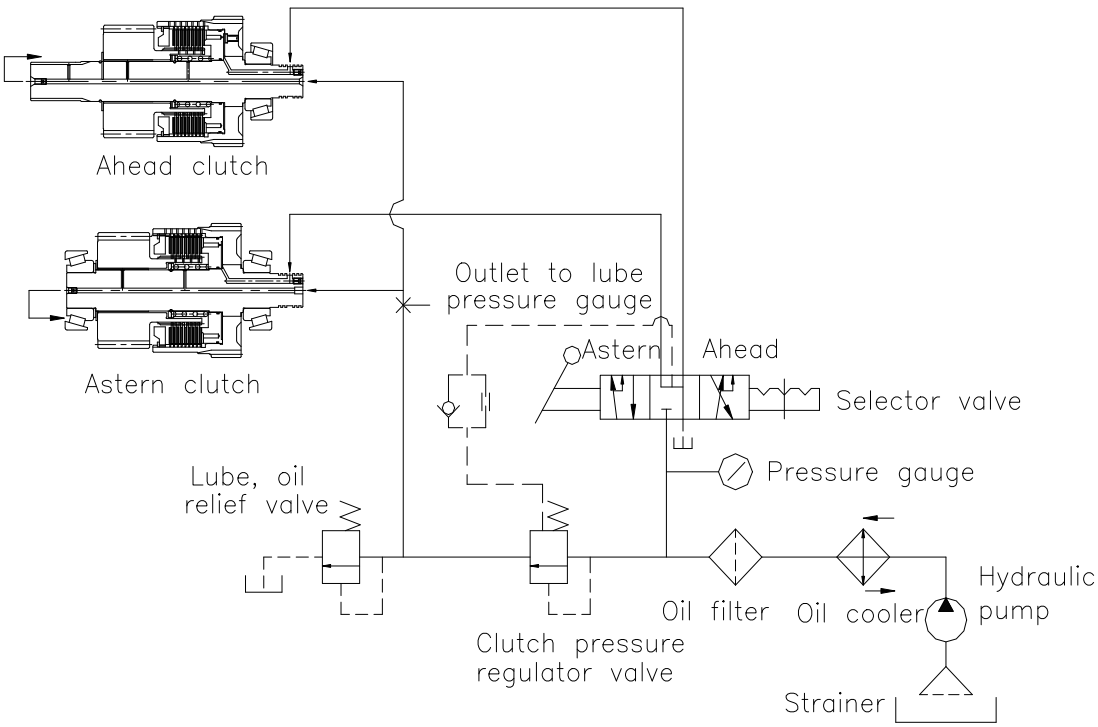

[Fig-4] Hydraulic System

4-2. Selector valve assembly

Flow of the pressure oil according to operation of the valve selector stem is shown in [Fig.5]

The pressure oil discharged from the gear pump leads in the direction of the arrow P of [Fig.6], and then into the hole of the valve stem.

When the valve selector stem is operated for ahead or astern operation, a part of the oil is led to the rear surface of the clutch piston to actuate the clutch, and another part of it is led to the oil pressure regulating piston through the orifice of a check valve to raise the oil pressure to the determined pressure gradually.

And the other part of the oil, according to continuous discharge from the hydraulic pump, pushes the oil pressure regulating valve and flows into the lubricating oil passage to forced-lubricate respective parts with pressure regulated by means of the lubricating oil pressure regulating valve.

When the valve stem is being shifted toward the neutral position, the return spring of the clutch returns the clutch piston to disconnect the clutch, and the oil pressure regulating piston is also returned to lower the pressure.

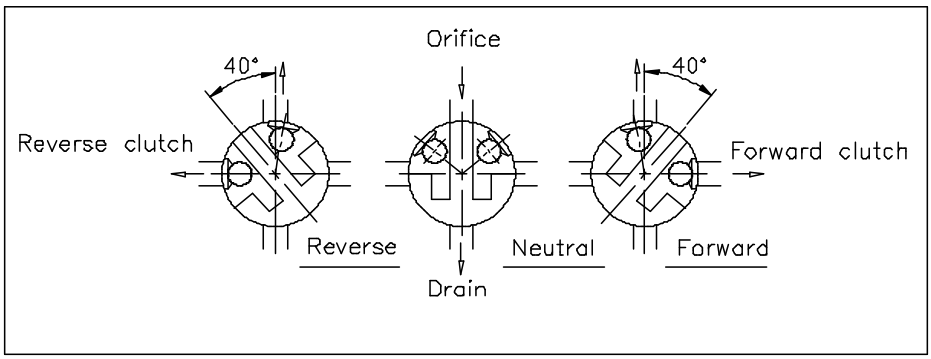

[Fig-5] Oil Passage of Valve Stem
[SEC. A-A of Fig-6]

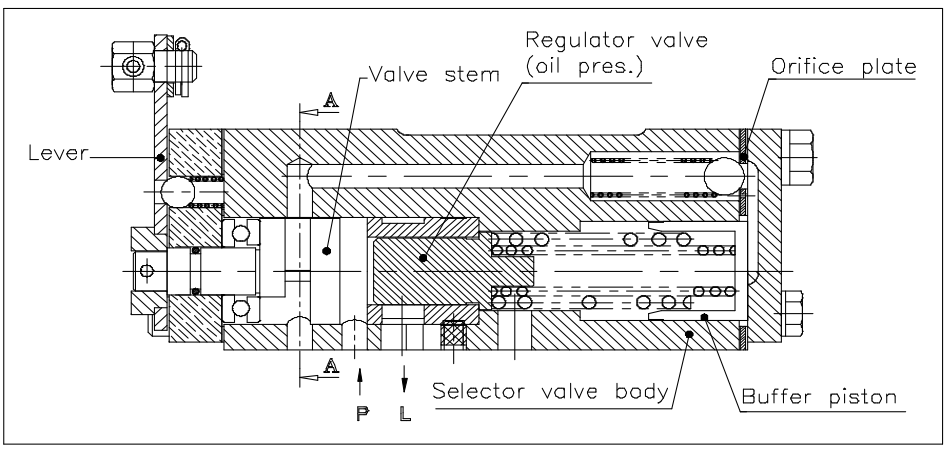

[Fig-6] Valve Stem Ass'y

SECTION 5 - INSTALLATION

Installation of marine transmission have an important effect on the function and efficiency of the marine transmission.

GAUGE / TOOL	SPEC.	REMART
DIAL GAUGE		
MAGNET BASE		
THICKNESS GAUGE		
WRENCHES		

DANGER

The Key, which is used for starting a marine engine, should be pulled off before installing Marine transmission to the Marine engine.

5-1. Check point before installation

The flywheel and flywheel housing should be cleaned and then be checked for the accuracy.

1) Check face of the flywheel housing (flatness)

Install a thousandths indicator gauge as shown in below figure, and read off he deviation of indicator gauge's scale, rotating the flywheel in the same direction. At this point, the value of deviation should not exceed 0.2 mm.

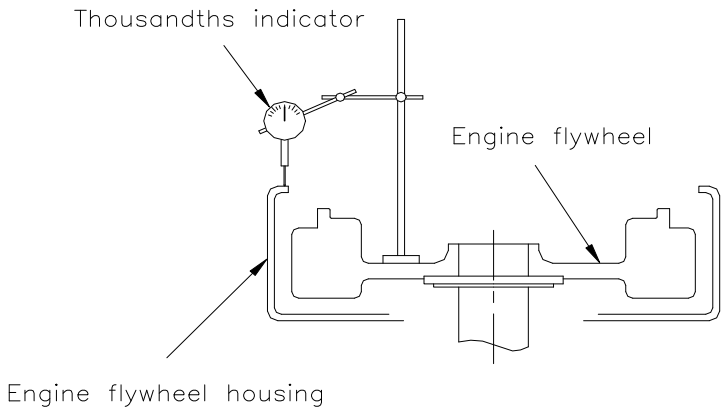

2) Check the bore of engine flywheel housing (concentricity)

Install a thousandths indicator gauge as shown in below figure, and read off the eccentricity of the indicator gauge's scale, rotating the flywheel in the same direction. At this point, the value of eccentricity should not exceed 0.2 mm.

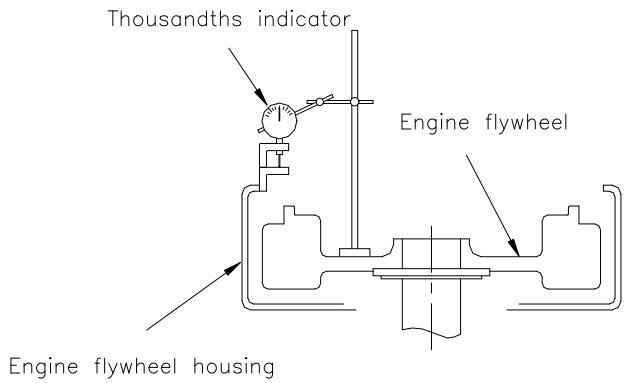

3) Check the driving ring surface of engine flywheel (flatness)

Install a thousandths indicator gauge as shown in below figure, and read off the deviation of the indicator gauge's scale, rotating the flywheel in the same direction. At this point, the value of deviation should not exceed 0.5 mm for every 100 mm of the diameter.

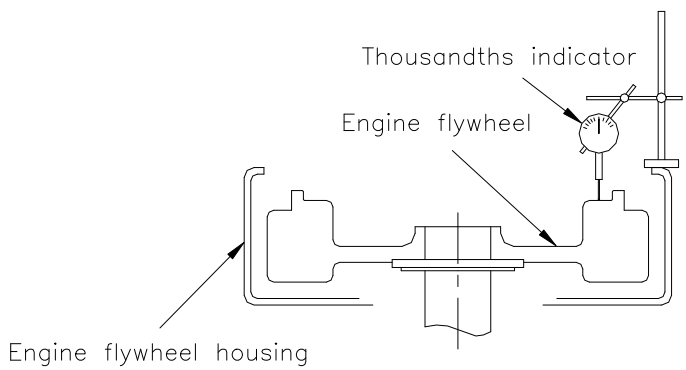

4) Inspection of diameter of the flywheel's driving ring seating guide(concentricity)

Install a thousandths indicator gauge as shown in below figure, and read off the eccentricity of the indicator gauge's scale, rotating the flywheel in the same direction. At this point, the value of eccentricity should not exceed 0.127 mm.

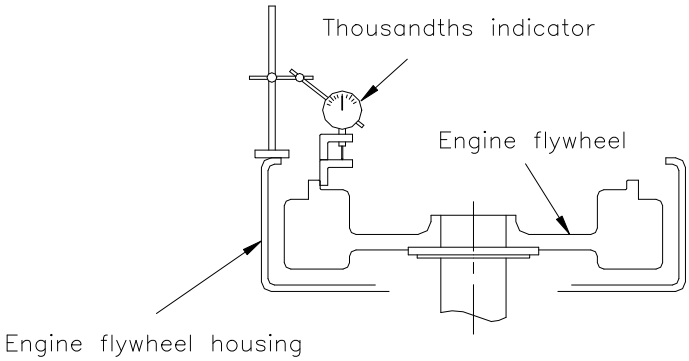

5-2. Installation

The alignment of the engine and the marine transmission is the most important factor for normal performance and extension of life.

1) Bedrail

Use the engine bedrail made of well-dried rigid wood or steel.
If the engine bedrail is not rigid, the alignment will be deviated due to the vibration of the engine or other influence.

2) Supporting

The support brackets for the marine transmission have to fix on the engine bedrail firmly like the engine mounting.

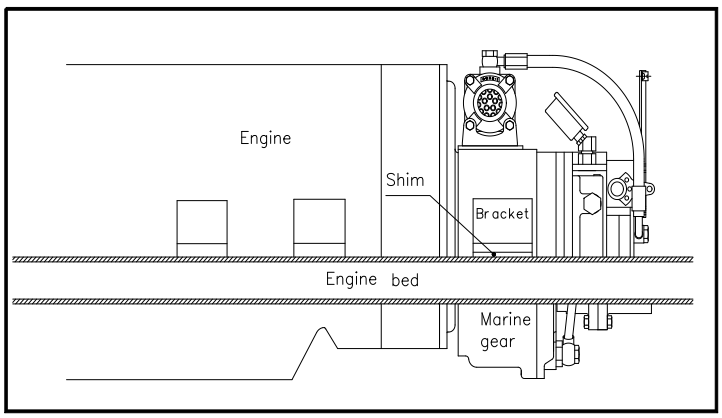

CAUTION

Bolts for Housing and Brackets of marine transmission should tighten securely. If not, a noisy, vibration or breakage of housing can occur.

3) Alignment

The alignment of marine transmission's output shaft coupling and the propeller shaft coupling should be aligned well and the allowable deviation is as indicated in the following figures :

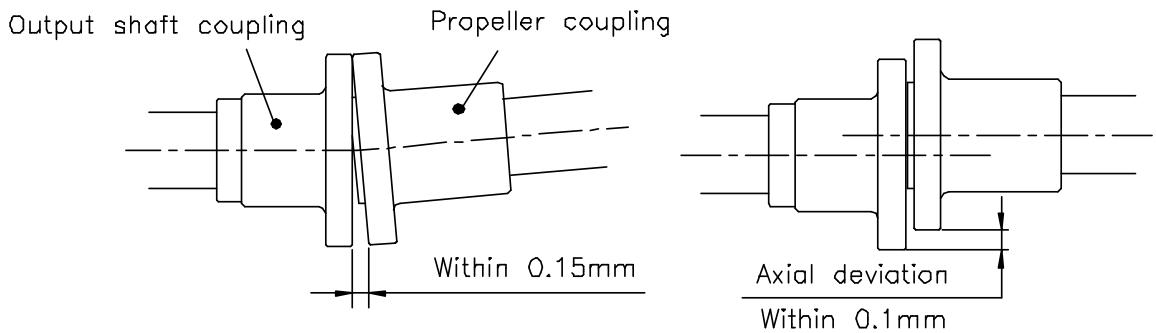

CAUTION

The alignment must be made only when the ship is afloat, not in a dock. In addition, in case of a wooden ship, periodic check should be made every one or two months since the engine bedrail may be bend up to about six months after initial installation, and also a FRP or steel ship must be checked periodically.

SECTION 6 - OPERATION

6-1. Preparations for operation

1) Check the whole parts of the marine transmission, and check if bolts, nuts, etc in major parts are loosened.
2) Check the oil level with oil level gauge.
   (Run the engine in the idling speed for a few minutes, and check immediately after stopping it)
3) Place the selector valve lever in the neutral position before starting the engine.

⚠ CAUTION	Check the oil of marine transmission before operation and if the oil is insufficient, feed it with oil.

6-2. Operation

1) Run the engine in the idling speed for about ten minutes for warming-up.
2) At this point, check for oil leakage, abnormal noise, over-heat, coolant condition, etc.
3) Check the clutch oil pressure by raising the engine speed gradually.
   (The clutch oil pressure 2-4 kg/㎠ in neutral position and in the rated engine speed)

6-3. Operation and stop

1) Check if the clutch oil pressure during ahead and astern actuation is normal.(Refer to 1-2 "Specifications")
   When the engine run at low speed, the clutch actuation oil pressure may be lower a little, but it is normal.
2) The operation of the selector valve lever for ahead or astern position must be made with 50% or below of the rated engine speed.
3) The clutch oil temperature during continuous actuation is 50-90℃, and may be raised a little due to frequent ahead and astern operations.
4) Check for abnormal noise or over-heat at all times during actuation. If an abnormal condition is found, stop the engine and find out the cause to correct it.
5) Be sure to place the selector valve lever in the neutral position to stop the engine.

6) Use of emergency bolts

If the ahead actuation clutch is slipped or not actuated, it can be connected mechanically for an emergency measure The ahead actuation clutch is provided with three bolts called emergency bolts, and can be connected by tightening the bolts.

If the spot repair is possible, make it correctly by referring to"Trouble shooting" and if it is impossible, enter a nearby port using the emergency bolts for repair.

⚠ CAUTION	Shift of lever of gearbox should be made when RPM of marine engine is below 50% of rated RPM of the marine engine.

* How to use the emergency bolts

1) First, stop the engine.
2) Remove the plug as shown in [Fig.7].
3) Then, tighten the emergency bolts with a 5mm wrench to connect the ahead actuation clutch.
4) Fit the removed plug.

⚠ CAUTION	Using the emergency bolts makes the ahead actuation clutch connected. Therefore, attention is called as starting the engine makes the ship moved ahead immediately. At this point, the selector valve must be placed I the ahead actuation position, and the engine should be operated with 70% or below of the rated speed. The oil must be added up to the center of the astern shaft during use of the emergency bolts.

⚠ DANGER	The speed of ship should be reduced before arrival to a port and towed to the port as astern function does not work during use of the emergency bolts.

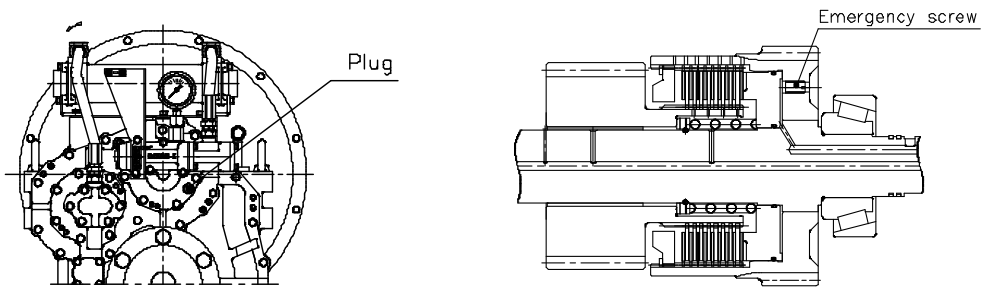

[Fig-7] Position of Emergency Screw

SECTION 7 - PREVENTIVE MAINTENANCE

7-1. Genernal

All the rotating parts of the marine gear are lubricated with oil in the case. The followings are the check points for maintenance of the proper performance :

7-2. Oil

1) Use only SAE-API service class SAE#30 engine oil.
   * Multi-grade oils(SAE#10W, 15W40, etc.) should not be used in D-I marine transmission, because they have influence on the coefficient of friction to make the clutch slipped.
2) Check the oil level everyday.(Refer to 5-1, Section 5)
3) Replace the oil after first 100 hours, and then every 1,000 hours.
   * If a foreign substance such as water, seawater, etc has come into the marine transmission, overhaul it clean its part before assembly, and then feed it with new oil.

⚠ CAUTION	Use only SAE-API service class SAE #30 engine oil Multi-grade oils(SAE#10W, 15W40,etc) should not be used in D-I marine transmission because they have influence on the coefficient of friction to make the clutch slipped.

7-3. Oil filter

Also, disassemble the oil strainer and the secondary oil filter to clean them at the time of oil changing.

7-4. Visual Inspection

Inspect external parts of the marine transmission frequently, and repair it if any defect is found. Particularly, inspect the rubber blocks through an inspecting window of the flywheel housing frequently, and if is damaged or worn out, replace It with new one.

7-5. Overhaul

The overhaul period of the marine gear is the same as that of the engine.
If any worn out or damaged parts is found, replace it according to the followings :

1) Replace all of the gaskets, O-rings, and other rubber products in every overhaul.
2) Replace the rubber blocks and bearings every 10,000 hours, or earlier if excessive wear or damage is found.

3) [Table 1] shows the allowable wear limits of the important parts.

[Table 1]

Parts	Point to be measured	Allowable wear limits	Remedy when limit is excessive
input coupling and input shaft	Spline backlash	0.3	Replacement
pinion and output gear	Gear backlash	0.5	"
clutch housing gear	"	0.4	"
pinion bush and input shaft	clearance	0.2	"
sintered plates and clutch housing	Gear backlash	0.5	"
steel plates and pinion	"	0.5	"

(Unit : mm)

Replace the worn-out parts in case of over the allowable wear limits. If too prolonged operation is expected to do the subsequent overhaul, it is preferable to replace them even if they are within the allowable wear limits.

7-6. Periodic Ispection Table

Periodic Ispection : ANNEX Ⅰ

SECTION 8 TROUBLE SHOOTING

If something is wrong with the marine transmission, refer to [Table 2].

[Table 2].

Symptom	Cause	Remedy
1. Low main oil pressure	1) Oil strainer clogged 2) Secondary oil filter clogged 3) Oil pressure regulating piston stuck in the control valve 4) Seal damaged or worn 5) Hydraulic pump damaged or worn 6) Remote controller defective 7) Orifice clogged 8) Clutch oil pressure regulator valve's spring damaged or worn	1) Remove clog and clean 2) " 3) " 4) Replacement 5) " 6) Adjustment 7) clean it 8) Inspect length of spring and replace it if necessary
2. No oil pressure	1) Oil level low 2) Hydraulic pump defective 3) Air leak on suction side of pump	1) In case of oil leakage, replace of the components such as gaskets, oil seals, etc. which cause oil leakage and fill the oil 2) Replace hydraulic pump 3) Correct cause of air leak
3. High main oil pressure	1)regulator pressure valve operated poorly	1) Remove clog and clean
4. Low Lubricating oil pressure	1) Lubricating oil pressure regulating valve operated poorly	1) Remove clog and clean
5. Over-heat	1) Clutches slipping 2) Excessive oil level 3) Bearing damaged 4) Defective rotating part	1) Disassembe marine transmission and check of clutch plates 2) Regulation of oil level 3) Overhaul marine transmission 4) Refer to Item 6
6. Rotating parts defective	1) Clutch plates stuck 2) Pinion bush stuck 3) Both thrust washers of pinion stuck 4) Clutch piston's returning spring is damaged or broken	1) Disassemble of clutch ass'y and replace clutch plates 2) Disassemble and replace 3) Disassemble and replace thrust washers 4) Disassemble and replace of spring
7. Improper Shifting of ahead / astern	1) Clutch plates stuck 2) defective Remote controller 3) Clutch piston's return spring is damaged or broken	1) Disassemble of clutch ass'y and replace clutch plates 2) Adjust and replace remote controller 3) Refer to Item 6-4).
8. Abnormal noise	1) Gear teeth or spline damaged worn 2) Bearing damaged 3) Rubber blocks damaged or worn 4) Bolts or nuts loosened or removed	1) Disassemble and repair or replace 2) Disassemble and replace 3) " 4) Secure tightening

SECTION 9 - DISASSEMBLY AND ASSEMBLY

9-1. Disassembly

Check the marine transmission for oil leakage or abnormal noise before disassembly.

⚠ CAUTION	Assembly and Disassembly should be performed in a place where there is no dust and foreign matter, etc. Don't assemble or disassemble marine transmission when raining or high percentage of humidity. The following pictures, which is used to help you understand, is for DMT50A. Thus, for other models, please refer to parts list and perform the assembly or disassembly accordingly.

TOOLS	SPEC.	REMARK
Wood Rags Washer Combination Wrench sets Torque Wrenchs Zig for Shim Adjustment Bearing Puller Bearing Heater Snap Ring Pliers Impact socket sets		

1) Disassembly of the marine transmission

① Drain all the oil from hydraulic systems.
② Disconnect all the connecting parts.
③ Disconnect the output shaft coupling and the propeller shaft coupling to provide a sufficient space for easy removing of the marine transmission.
④ Remove the marine transmission from the engine, but do not remove the driving ring unless replacement of parts is necessary.

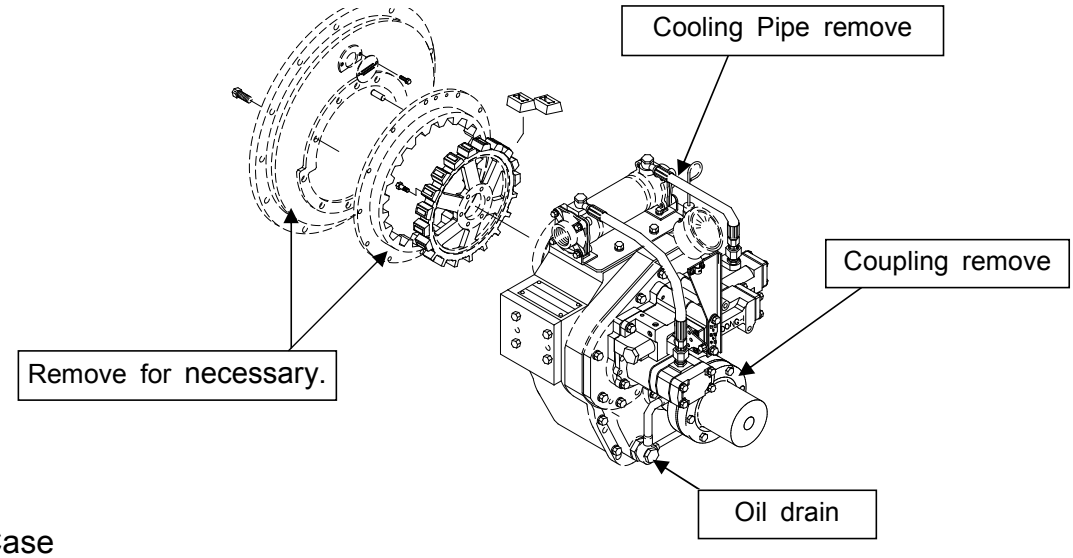

2) Case

① Place the marine transmission on a rigid wooden bed with its input side down so that the spider can be easily rotated.
② Remove the manifold(pump holder and the valve holder) fixed on the bearing carrier
③ Remove the hydraulic pump
④ Remove the bearing carrier fixed on the cover by pulling bolts, and then remove outer race of the bearing fixed on the bearing carrier.
⑤ Remove the input shaft assembly and the astern shaft assembly.
⑥ Remove the output shaft coupling, and then the case cover by pulling bolts.
⑦ Remove the input coupling.

⚠ CAUTION	ⓐ Do not remove the input coupling, unless it is needed to replace. ⓑ When disassembling the case, take care not to damage or lose the clearance adjusting shim for the bearings of the input, astern and output shafts for re-assembly. ⓒ As the clearance may be changed according to wear of the thrust washers or replacement of the bearings, adjust the shim according to description of Item 9-3 at the time of assembly.

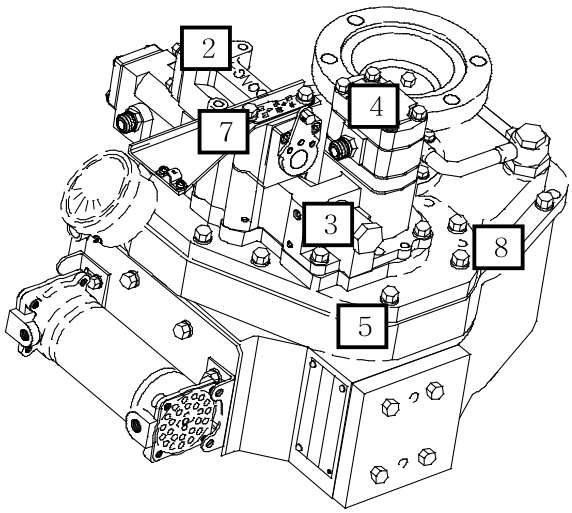

3) Input shaft assembly

① Remove the retainer placed in the front, and then the thrust needle bearing, the pinion gear and the thrust needle bearing in the order.
② Remove the snap ring, and then the back plate to support clutch plates the external sintered plates, and the internal steel plates in the order.
③ Press the spring toward the clutch piston, and remove the retainer placed in the middle of the input shaft, and then the spring support and the return spring.
④ Strike the spline portion of the input shaft against a wooden bed to remove the clutch piston.

⚠ CAUTION	Do not use a steel bed as the shaft may be damaged

⑤ remove four seal rings installed on the shaft end

⚠ CAUTION	Be careful not to break Rings (oil seal)

⑥ Do not remove the bearing on the rear side unless replacement is necessary.

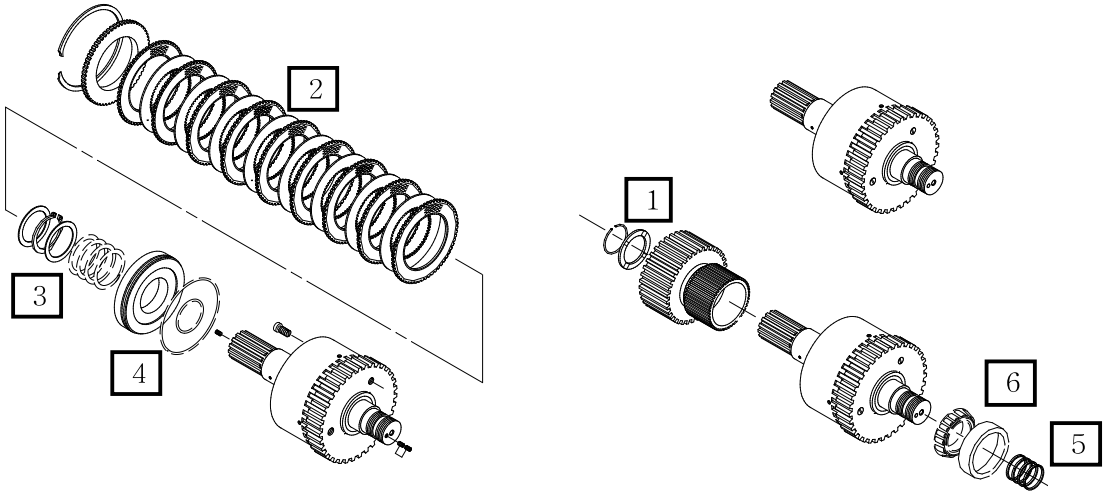

Check Point

☞ **[Refer to Table-1]**

4) Astern shaft assembly

① Remove the taper roller bearing installed in the front of the astern shaft assembly by a bearing puller.

② The rest of the removing process is the same as process of the the input shaft assembly.

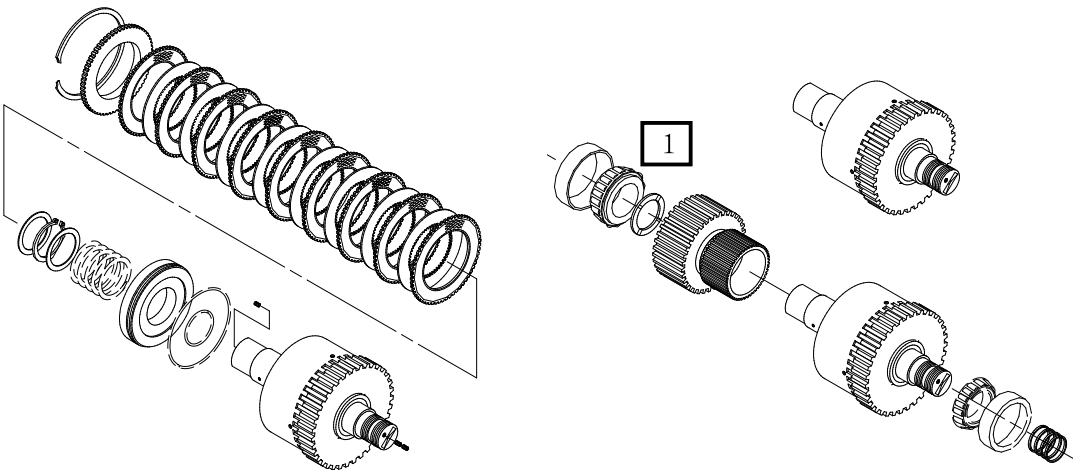

Check Point

☞ **[Refer to Table-1]**

5) Output shaft assembly

② Do not remove the taper roller bearings installed in both sides end of the output shaft unless replacement is necessary.

* Do not remove the ahead and astern clutch housings and the output gear as they have been shrinkage fitted to the shaft.

⚠ CAUTION	Ahead (Astern) Clutch Housing and Reduction gear is shrinkage fitted to the each shafts. Thus, it is impossible to disassemble. Do not try to disassemble.

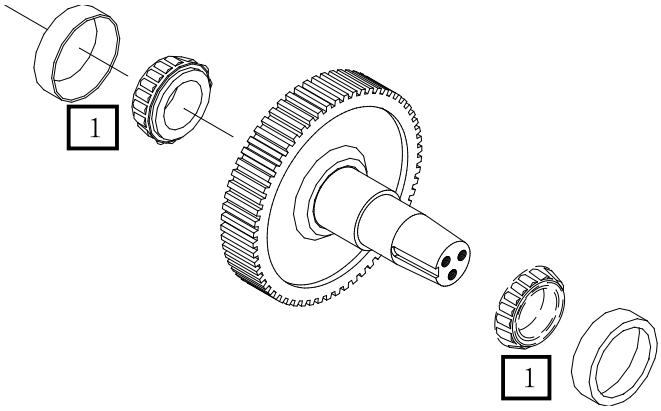

Check Point

☞ **[Refer to Table-1]**

6) Spider

Do not remove the spider unless replacement is necessary.

7) Selector valve body

① Remove the hexagonal socket screws, and remove the cover spring pin, lever, selector valve, thrust bearing, O-ring, spring and ball.

② Remove the screw, and remove the piston cover, orifice plate, oil pressure regulating piston, springs oil pressure regulating valve, ball, spring and remove the set screw and sleeve.

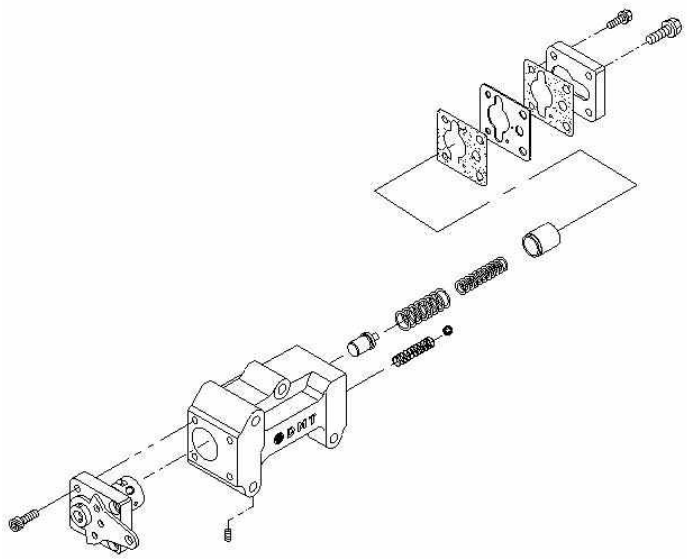

Trolling Valve(Option)

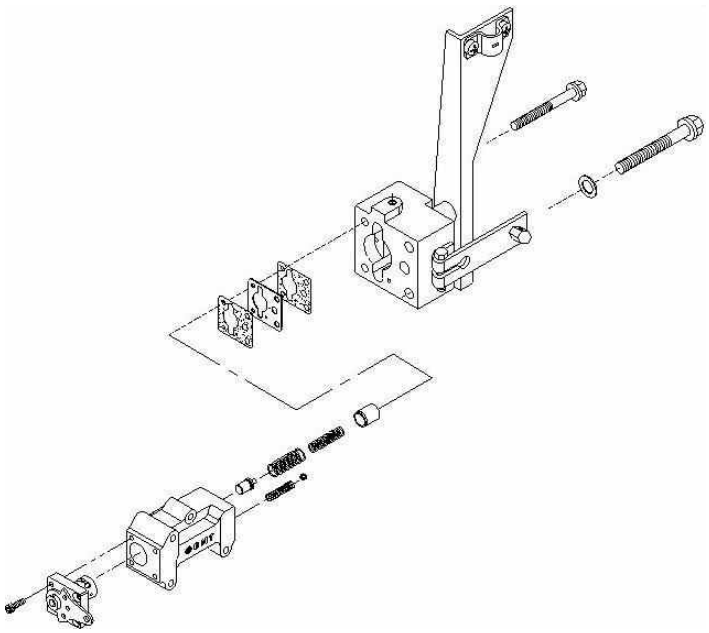

Check Point

☞ **[Refer to Table-1]**

9-2. Assembly

Assembly shall be performed in the reverse order of disassembly. Clean all the parts so that there is no dust or metal chip, etc., in the marine transmission before assembly, and observe the followings :

1) Replace the parts which cause oil leakage.
2) Replace the sliding surface of the bearing discolored or excessively worn out, if it produces an abnormal noise.
3) Replace the worn out parts over the allowable wear limits.
4) Grease on such rubber parts as O-rings before assembly.
5) Replace the gaskets with new ones.
6) Check and confirm whether degree of bent of the lock washer is normal before assembly.
7) The followings are precautions for assembly of the clutch :
   ① Before assembling the clutch, check whether the clutch piston, input shaft, or astern shaft where the O-rings are to be seated has a sharp edge and grease them.
   ② Install the external sintered plates and the internal steel plates alternately in the order from the clutch piston side as shown in [Fig 7].
   ③ Ensure that the snap ring supporting the back plate support is firmly seated in its groove before assembling the marine transmission.

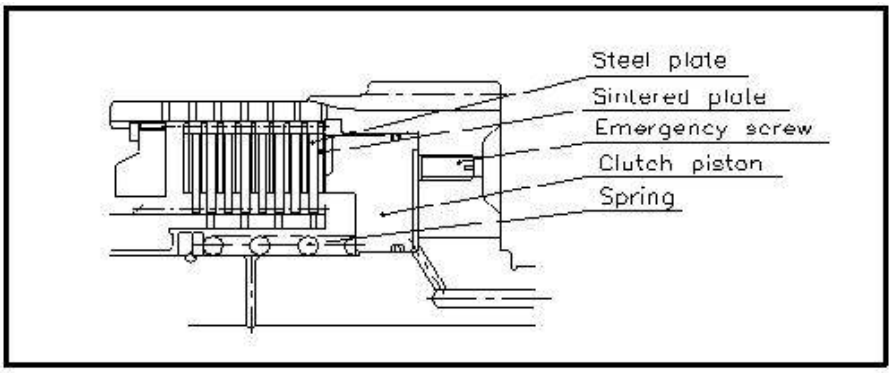

8) Specified torques for screws and nuts

① The specified torque for the screws and nuts except the important those and nuts are indicated in [Table 3] :

Classification	M5	M6	M8	M10	M12
Hex head cap Screws & nuts		0.5 - 0.8	1.1 - 1.3	2.2 - 2.6	3.9 - 4.5
Hex socket head cap screw	0.6 - 0.7	1.1 - 1.2	2.6 - 3.0		

(Unit : kg · m)

9-3. Adjustment of shim

Adjust the clearance of the taper roller bearings supporting the input, astern and output shafts with a shim as illustrated in [Figs.10 and 11].

1) Adjustment by shims of the input and astern shafts; adjust the axial clearance to be 0 ~ 0.05 pushing the rear bearing toward the front bearing.
2) Adjustment by shims of the output shaft; adjust the axial clearance to be 0 ~ -0.05 in the same manner as the above.

⚠ CAUTION	ⓐ The shim adjustment should be made very accurately. ⓑ Too small clearance may cause faster wear of the bearings and rise of the oil temperature (over-heat), and too large clearance may cause abnormal wear of the manifold, oil leakage from the oil seals, abnormal wear of the gear,etc.

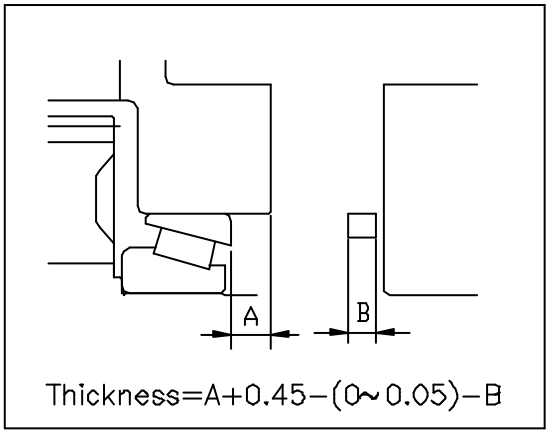

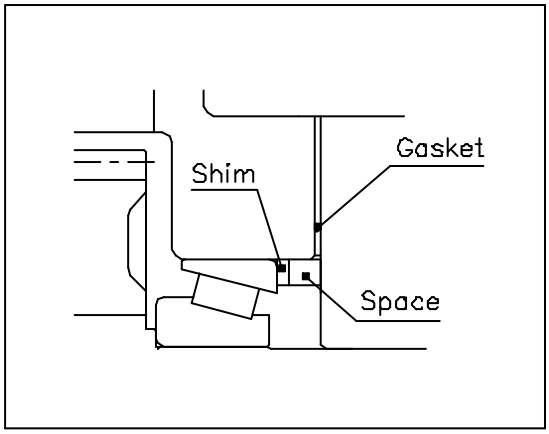

[Fig-10] Input and Astern Shafts

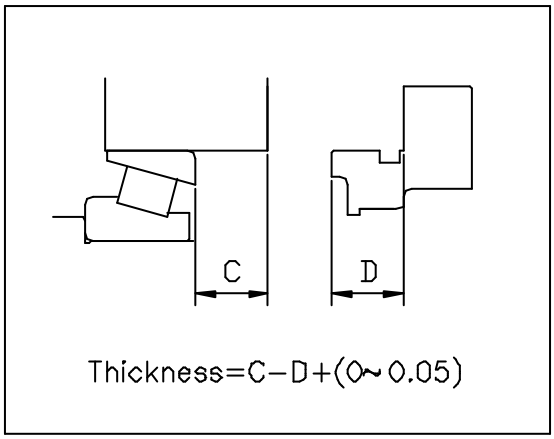

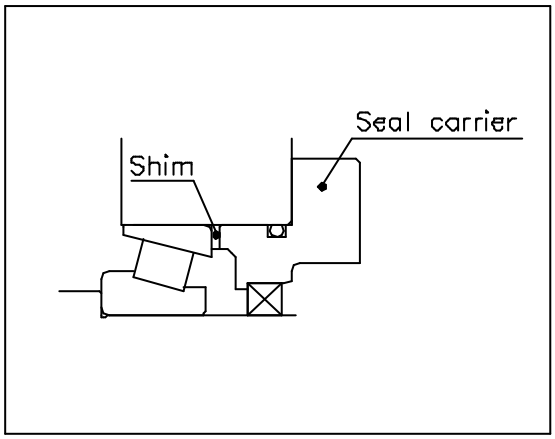

[Fig-11] Output Shaft

⚠ CAUTION

1.The shim adjustment should be made with the special tools that are made according to the drawings provided.

2.D-I Industrial Co. will provide you with drawings that are needed to manufacture special tools for the shim adjustment. Refer to the drawing lists attached and contact with D-I Industrial Co. for drawings of special tool for the shim adjustment.

ANNEX I

HOW TO DISASSEMBLE OUTPUT COUPLING

NO	FIGURE	INSTRUCTION
1	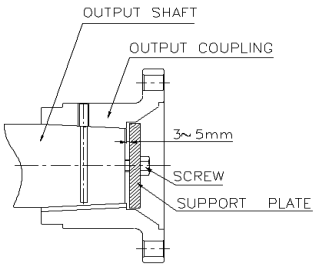	1)Assemble the support plate as figure. If not, people might get hurt by the output coupling which might come out suddenly by the hydraulic pressure.
2	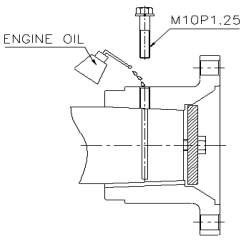	1)Pour Oil into the hole on the output coupling and then screw the bolt in two or three times to push the Oil into the hole.
3	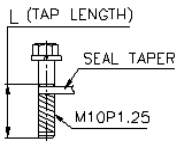	1)Get the bolt worn Seal taper to prevent the Oil inside output coupling from going backward. ※Screw Length(**L**) .DMT110A: **25mm** over .DMT150H~240H, 260H, 280H: **35mm** over .DMT200HL, 260LH, 280HL: **45mm** over
4	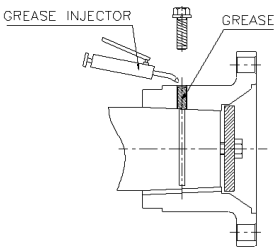	1)Pour Grease into the hole on the output coupling to prevent the Oil inside output coupling from going backward. 2)Screw the bolt with Seal taper into the hole rapidly to make a pressure inside output coupling. 3)Disassemble the output coupling.

[CAUTION]
1.In case the output coupling is not off by above porecedure, try above precedure two or three times.
2.Applicable Model: DMT110A-DMT280HL

PERIODIC INSPECTION TABLE

○ Check, ◎ Exchange

	NAME	Check / Exchange (year)				Parts to Using	Remark
		1	3	5	10		
MARINE GEAR BODY	*Gasekt, paper				◎	Cover, Case, Holder, Manifold etc.	
	*Gasekt, copper				◎	Drain/Magnet Plug etc.	
	*O Ring				◎	Screen/Secondary Filter Air Breather Ass'y etc.	
	*Seal, oil				◎	Input Coupling, Output Shaft	
	Ring, oil Seal		○		◎	Input/Astern Shaft	Wear, Breakage
	Spring		○		◎	Body, selector valve Valve, regulator pressure Valve, oil pressure etc.	
	Plate (sintered/steel)		○	○	◎	Clutch houding	wea,Taken off ,Reform
	*Ring, external				◎	Input/Astern Shaft	
	Washer, thrust			○	◎	Input/Astern Shaft	Wear, Damage, Taken off
	Washer, thrust bearing Bearing, thrust needle			○	◎	Input/Astern Shaft (D240H~D280HL)	Wear, Damage, Taken off
	Bush, pinion			○	◎	Input/Astern Shaft	Wear, Damage, Taken off
	Bearing, taper			○	◎	Input/Astern/Output Shaft	Wear, Damage, Taken off
	※Magnet Plug					Cover	
	※Oil(SAE#30)						See at 23 page (7-2 Oil)
	※Screen Filter		◎	◎	◎		Breakage, Reform
	※Secondary Filter		◎	◎	◎		Breakage, Reform
PUMP	*Gasekt, pump/plate					BODY, pump	
	Bush, pump			○		Plate, pump Cover, pump	Wear, Damage, Taken off
	Pump Ass'y			◎	◎		
COOLER	*Gasekt, paper					Cover, cooler	
	*Gasekt, copper					Bolt, union	
	Zinc Anode						Every 6 month to exchange

***MARK :** The parts, which are marked*, should be replaced with new ones once marine transmission is disassembled and assembled.

※**MARK** : The pars, which are marked%, are recommended to be cleaned when oil replacement (Replace oil after first 100hours and then every 1000hours)

1. REGULAR INSPECTION (EVERY 5 YEARS)

-Inspect and check marine transmission after disassembling the marine transmission

-Refer to above table for the parts that need to be replaced.

2. OVERHAUL OF MARINE TRANSMISSION (EVERY 10 YEARS)

-Inspect and replace parts after disassembling the marine transmission.

-Refer to ANNEXⅡ for overhaul parts.

ANNEX II

OVERHAUL KIT SET

Overhaul kits are managed with one part No. Thus, with one part No, Overhaul kit set is supplied.

MODEL	KIT No.		
	3 YEARS	5 YEARS	10 YEARS
DMT18A	018000-3K	018000-5K	018000-10K
DMT25AL	025000L-3K	025000L-5K	025000L-10K
DMT50A	050000-3K	050000-5K	050000-10K
DMT70T	070000-3K	070000-5K	070000-10K
DMT90A	090000-3K	090000-5K	090000-10K
DMT100T	090000T-3K	090000T-5K	090000T-10K
DMT100HL	100000L-3K	100000L-5K	100000L-10K
DMT110A	110000-3K	110000-5K	110000-10K
DMT135HL	135000-3K	135000-5K	135000-10K
DMT136H	140000-3K	140000-5K	140000-10K
DMT140H		140000-5K	140000-10K
DMT144H	144000-3K	144000-5K	144000-10K
DMT150H	150000-3K	150000-5K	150000-10K
DMT170HL		170000-5K	170000-10K
DMT180HL	180000-3K	180000-5K	180000-10K
DMT200H	200000-3K	195000-5K	195000-10K
DMT200HL		200000-5K	200000-10K
DMT240H	260000-3K	240000-5K	240000-10K
DMT260H		250000-5K	250000-10K
DMT260HL		260000-5K	260000-10K
DMT280H	280000-3K	270000L-5K	270000L-10K
DMT280HL		280000L-5K	280000L-10K

ANNEX III

PART ORDER SHEET

Fill out the blanks below and get in touch with distributor			DATE	
COMPANY				
NAME				
ADRESS				
TEL.		FAX.		

PARTS ORDER LIST			
MODEL		Gear Ratio	
		Serial No.	
ENGINE	HP/ rpm	Installation date	

No.	NAME	PARTS NO.	Q.TY	No.	NAME	PARTS NO.	Q.TY

REMARK	

ANNEX Ⅳ

WARRANTY LETTER

The marine transmission, which D-I Industrial Co. manufacture, is guarantied to have a good operation in case that D-I Marine Transmission is operated according to the instructions mentioned in the D-I marine gearbox manuals. D-I Industrial Co. warrants D-I Marine Transmission as follows.

1. SCOPE OF WARRANTY

Warranty is limited to repair or supply with new one against D-I Marine transmission or its parts which is occured by defective materials or workmanship within warranty period.

2. WARRANTY PERIOD.

D-I Industrial Co warrants against defective materials or workmanship for twelve months after first date of test in sea.

3. WARRANTY NON EFFECTIVE

D-I Industrial Co. does not warrant

1)The parts that are not produced by D-I Industrial Co or genuine parts which are lost.

2)The cost or the breakdown that occur for repairing before contacting with D-I Industrial Co.

3)The breakdown which is occured due to any modification to D-I Marine Gearbox or its parts without the prior consent of D-I Industrial Co.

4)The breakdown that is occured due to the customer's negligence, faulty maintenance. Misuse or non observance of recommended or operation instructions.

5)Consumable parts such as Gaskets

4. OBLIGATION OF USERS.

1)D-I Marine Gearbox should be inspected and repaired according to the instructions mentioned in the manuals.

2)Use of unsuitable parts, inspection or repair can cause a fatal damage. In case that D-I gearbox should be repaired in a workshop, use a workshop that is appointed by D-I Industrial co.

5. WARRANTY REPAIR

1)This warranty letter is accompanied D-I Marine Gearbox and is effective with signature of D-I Industrial Co.

2)Users should summit this warranty letter to warranty repairman when warranty repair or periodic inspection.

6. D-I INDUSTRIAL CO. does have no obligation to apply new specifications to the D-I Marine Gearbox that was supplied before changing specifications.

7. WARRANTY SUCCESSION

In case that owner is changed because D-I Marine Gearbox is resold or contributed to the other customer within warranty period, D-I Industrial Co. warrants the rest of warranty period. In order to do that, this warranty letter should be accompanied with D-I Marine Gearbox.

D-I INDUSTRIAL CO.,LTD.

ANNEX Ⅴ

JIG DRAWING

[ATTACHMENT DRAWINGS]

1) SHIMING JIG (INPUT&ASTERN)

2) SHIMING JIG (OUTPUT)