개정(REV.)	000
도면 DWG.NO.	17000GHB~C-114RC

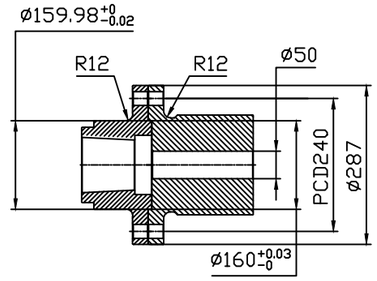

OUTPUT SHAFT COUPLING & PROPELLER COUPLING DIMENSION

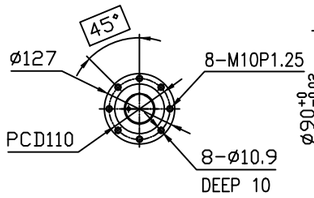

INPUT COUPLING DIMENSION

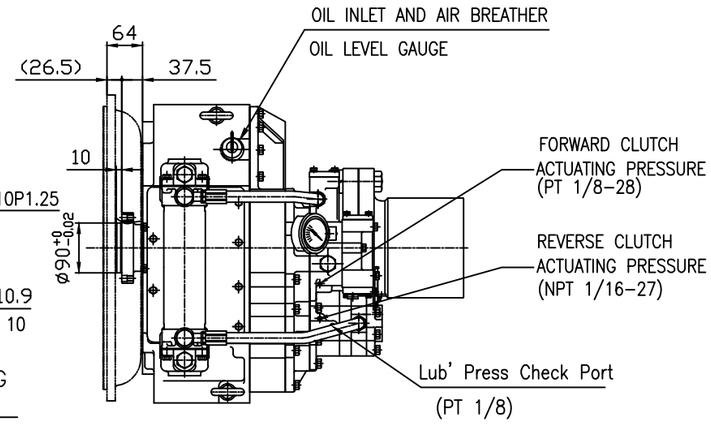

DMT 170HL MARINE TRANSMISSON SPECIFICATION			
GEAR RATIO	4.04, 4.48		
TOTAL WEIGHT	APPROX. 352.5 kg(DRY)		
OIL CAPACITY	APPROX. 10 L		
OIL VISCOSITY	SAE # 30		
OIL PRESSURE	1.96 ~ 2.35 MPa	CLUTCH OIL	
DIRECTION OF ROTATION IN FORWARD	INPUT	C.C.W VIEWED FROM THE STERN	
	OUTPUT	C.W VIEWED FROM THE STERN	
OIL CHANGE INTERVAL	THE FIRST 100HOURS OF INITIAL OPERATION		
	AND EVERY 1000HOURS THEREAFTER		
SHIFTING LIMIT	UNDER 50% OF THE RATED ENGINE SPEED		
OIL COOLER	WATER FLOW 40 ~ 60L/min		
	TEMPERATURE OF COOLING WATER	MAX 32°C	
OPERATING TORQUE OF SHIFTING LEVER	UNDER 2.94Nm		

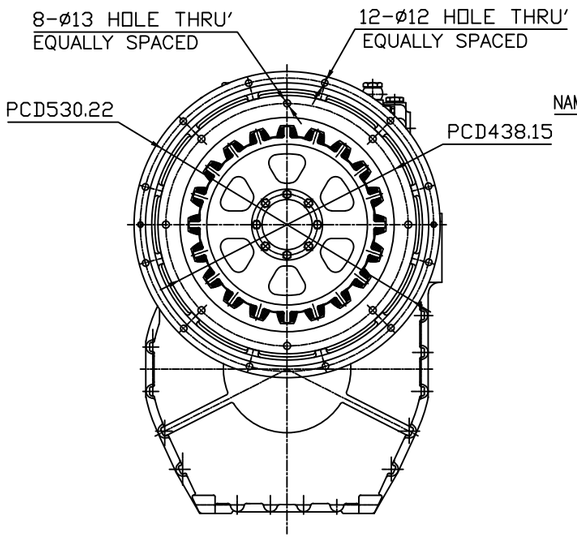

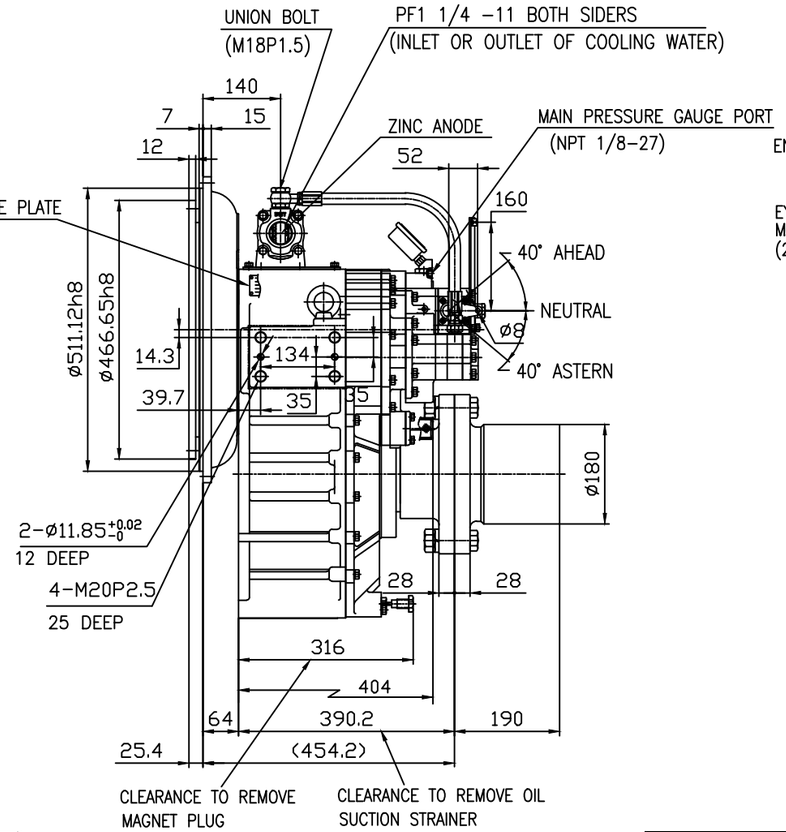

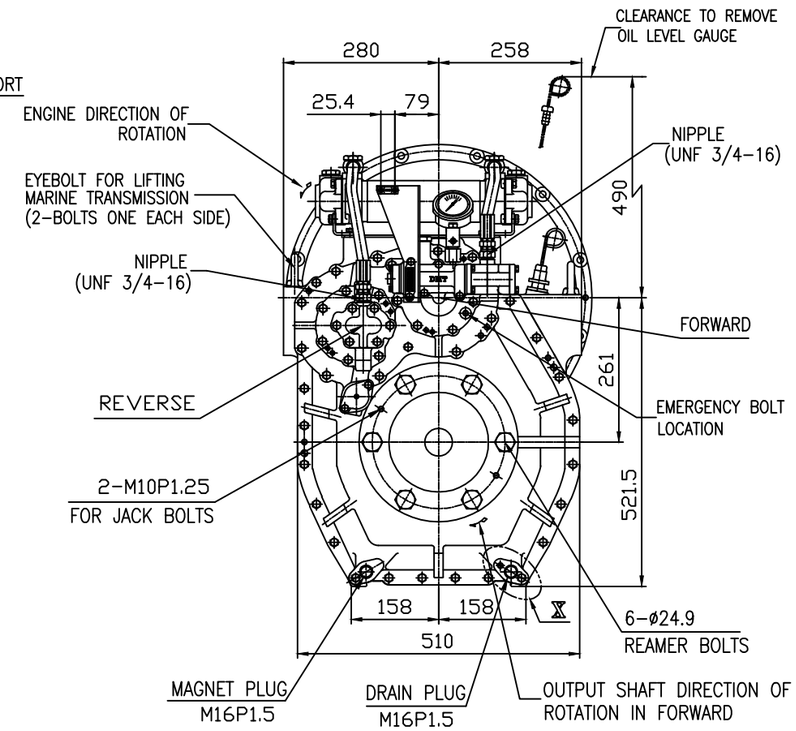

REMARK
1.HOUSING: SAE#1
2.DRIVING RING: SAE 14"
3.COULING TYPE : RUBBER

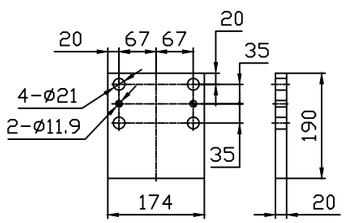

BRACKET DIMENSION

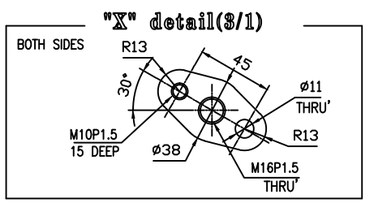

공통공차 TOLERANCE ON			
분수 FRACTIONS	소수 DECIMALS	각도 ANGLES	
± —	± —	± —	

절삭가공 일반공차				
구분		조급	중급	정급
1 초과	4 이하	± 0.3	± 0.1	± 0.05
4	16	± 0.5	± 0.2	± 0.07
16	63	± 0.7	± 0.3	± 0.1
63	250	± 1.2	± 0.5	± 0.2
250	1000	± 2.0	± 0.8	± 0.3

번호 NO.	품번 PART NO.	품명 PART NAME	개수 Q'TY	재질 MATERIAL	규격 SIZE	비고 REMARKS

재질 MATERIAL	—		
작성 DATE 2012.06.18	척도 SCALE N/S	형식 TYPE	DMT170HL
원도번 ORIGINAL DWG. NO.			
승인 APPROVED BY	검도 CHECKED BY	제도 DRAWN	설계 DESIGNED
JK.Kim	KS.Han	KC.Yoon	
품명 NAME	MARINE TRANSMISSION		
도번 DWG. NO.	17000GHB~C-114RC	개정(REV.)	000
D-I INDUSTRIAL	크기 SIZE	A3	코드번호 CODE ID. NO.

SHEET 1 OF 1
동아기술-004(841×594)